Browning®

McGILL®

ROLLWAY®

SEALMASTER®

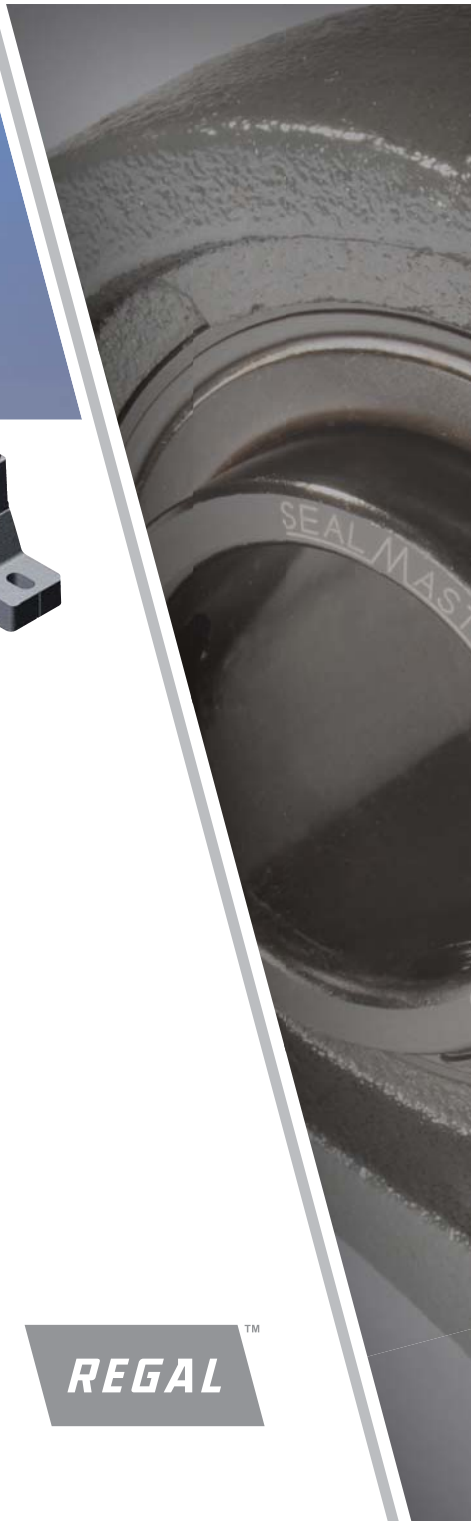

BEARING PRODUCT CATALOG

CAM FOLLOWER BEARINGS

NEEDLE ROLLER BEARINGS

CYLINDRICAL ROLLER BEARINGS

THRUST ROLLER BEARINGS

MOUNTED BALL BEARINGS

MOUNTED ROLLER BEARINGS

ROD END & SPHERICAL PLAIN BEARINGS

CORROSION RESISTANT BEARINGS

SPECIALTY & AEROSPACE BEARINGS

REGAL™

Keep your equipment – and your business – moving forward

The whole world is on the move today. Everything from people and products to ideas and information That means business has to be on the move, as well. Regal Power Transmission Solutions can help. We keep products – and businesses – moving forward. Whether it's helping to make sure that packages arrive on time, roads are built, energy is produced, food and beverages are processed, or luggage arrives at airport baggage areas, our products and solutions help make the world go.

The Regal Power Transmission Solutions Advantage

Regal Power Transmission Solutions brings you more than a century of technology and engineering experience. As a Regal Power Transmission Solutions business, we are part of one of the world's leading suppliers of innovation and insight, providing solutions to customers around the world. Backed by extraordinary technological capabilities and resources, we can deliver customized, competitively valuable solutions that meet the unique needs of each of our customers.

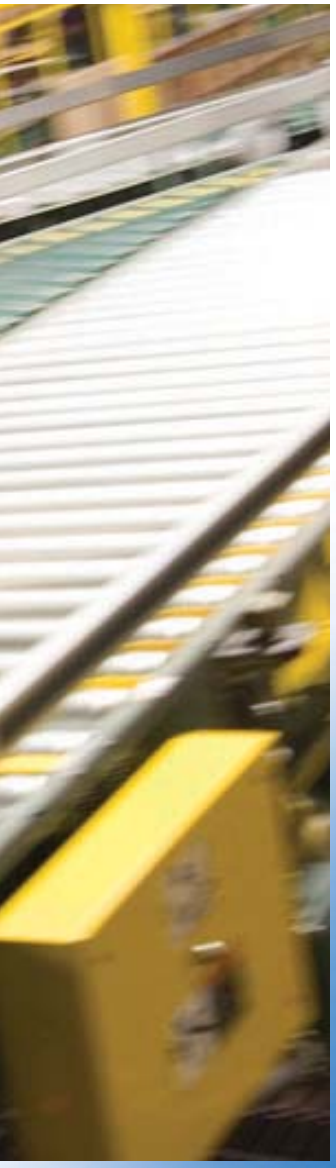

Time-tested Brand Performance

Regal Power Transmission Solutions is a family of respected product brands that supply a variety of power transmission components designed to increase both uptime and productivity. Each of our brands brings years of time-tested reliability and proven performance results. Together they deliver a product line unparalleled in its breadth.

Founded in 1886, Browning is the world leader in V-belt drives and helical shaft-mounted speed reducers. Browning also offers a broad range of other products, including gearing, mounted ball bearings, mounted roller bearings and sprockets.

Founded in 1958 in Spain, Jaure is a leader in the European marketplace. Jaure provides highly engineered couplings for industries ranging from steel and paper, hoisting to windmills and marine applications.

Founded in 1920, Kop-Flex brings over 80 years of design and application experience to a wide range of industries. Kop-Flex products include gear, disc and resilient shaft couplings.

Founded in 1905, McGill patented the CAMROL® cam-follower bearing, which today is offered in more than 1,400 different combinations and configurations. McGill products also include aerospace bearings, needle and spherical bearings.

Founded in 1880, Morse is well known for its performance-proven roller-chain drives, clutches, worm-gear speed reducers and couplings.

Founded in 1908, Rollway provides over 2,000 different types of cylindrical roller bearings, cylindrical and tapered thrust bearings and extra-large roller bearings.

Founded in 1935, Sealmaster is the industry's preferred bearing product, known for its premium-quality mounted ball-bearing line, as well as its mounted roller bearings.

Founded in 1985, System Plast S.p.A. is a global supplier of steel and engineered plastic conveying chains and chain tracks, modular plastic belts, composite housed bearings and Valu Guide® conveyor components and guide rails.

A History of Innovation

Our tradition of innovation goes far beyond our product enhancements. We've been at the forefront in offering across-the-board improvements in everything from manufacturing techniques to online tools as well as our Customer Solution and Innovation Centers.

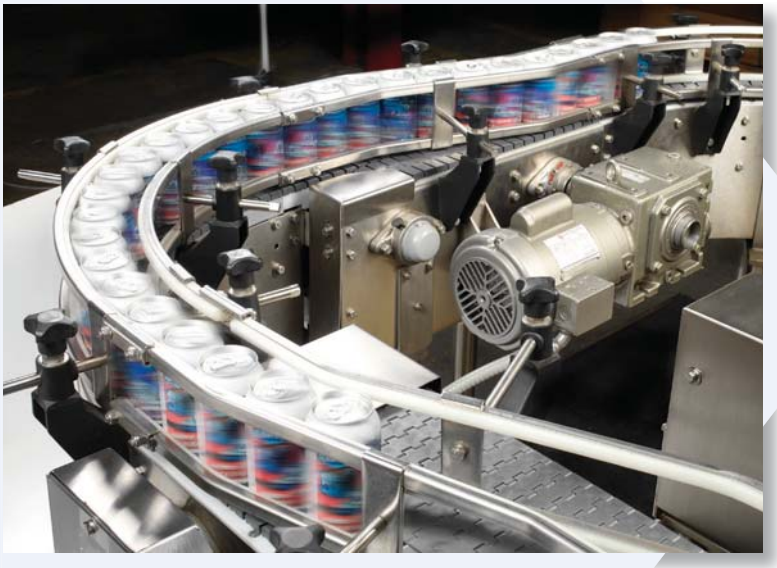

Manufacturing

Our lean-manufacturing capabilities, coupled with our combined engineering expertise and our global facilities, lets us deliver the solutions you need – when and where you need them. In addition, our bearings group continues to advance its assemble-to-order (ATO) capabilities. The result? Fast, accurate production that outpaces industry standards. Meanwhile, our coupling operation's engineered to order (ETO) process offers specific customer application solutions.

Online Tools

Our EDGE® Online industry-leading consultative website (www.RegalPTS.com) offers quick, concise and complete access to a wide range of support services, including:

- eCatalog
- Smart interchange
- Product selection
- Product literature
- Engineered solutions
- CAD templates
- EDGE JIT – a seamless, web-based program that selects drives at the lowest transactional costs
- eLINK – a transaction tool that lets you instantly contact us for messages and updates on:
  - Stock/price checks
  - Order entry
  - Order status
  - Quote center
  - Shipment tracking
  - Shopping list (favorites)

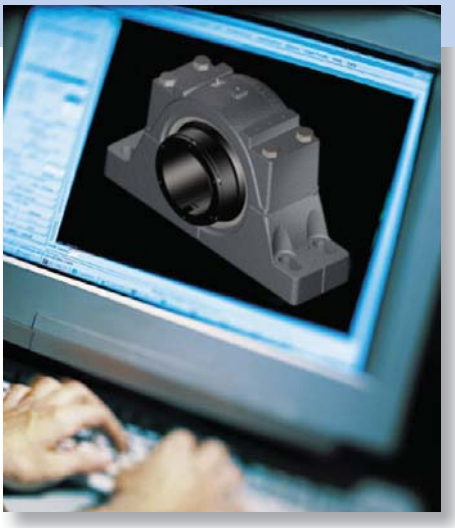

Training

PT University® online training program helps make sure that your personnel receive the training they require. Regal Power Transmission Solutions provides comprehensive, high- quality product training for our customers. Our cutting edge training tools, coupled with our experienced training personnel, deliver unsurpassed product knowledge to customers everywhere. We can tailor training to programs that best fit your needs, including online and instructor-led courses.

Technical Support

For added technical support, we provide:

- Research & design – Regal Power Transmission Solutions spends 3.5% of its total revenue on R&D
- Six global technical support centers
- International technical support
- Around-the-clock service availability, via our Application Engineering Department (800-626-2093), e-mail or online chat

Channel Partners

Regal Power Transmission Solutions has distribution channel partners throughout the world offering a wide variety of value-added services. For a full listing of our authorized distributors, technical support centers and online tools, visit www.RegalPTS.com

The Power of People

The real innovation behind our products comes from our people. Our engineers study your unique industry challenges as thoroughly as their own areas of expertise. Meanwhile, our sales force and field-service personnel also work hard to understand the challenges of every customer, in every marketplace and industry. Finally, our customer service representatives are always ready and available to answer any questions, solve problems or deal with any issues.

About This Catalog

Inside this catalog, you will find the common range of unmounted and mounted bearing products offered by Regal Power Transmission Solutions, carrying the globally recognized brands: Browning, McGill, Rollway and Sealmaster.

To help you easily locate the information you are looking for this catalog has been laid out in a consistent format between the various brands and bearing types. The structure of the catalog is as follows:

Bearing Basics

This section includes general engineering information pertaining to bearing types, selection criteria, standard formulas used across the various bearing types such as L10, lubrication methods and types.

Product Sections

The following information typically appears in each product section.

Product Type Overview

A short descriptive narrative of the bearing types found in this section.

Section Table of Contents

A pictorial and descriptive table allowing you to narrow down the bearing type required for specific application or design need.

Exploded Product View

An exploded product view highlighting various critical components of the bearing.

Product Nomenclature

A breakdown of the part nomenclature (description) as a guide to easily understand the part numbers, and shows the standard and common optional features.

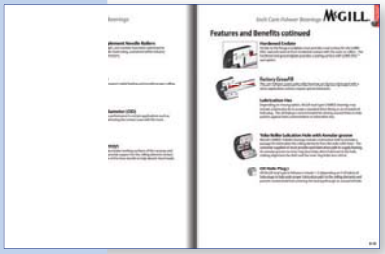

Standard Product Features & Benefits

Additional details of the key components highlighted in the exploded view detailing the specific feature and reviewing why it is a benefit to you the user.

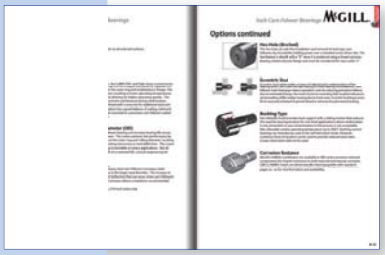

Optional Product Features & Benefits

A listing of the common options available to further enhance bearing performance in your application or features tailored to specific applications such as high speed, high temperature, low temperature, etc.

Product Tables

- A 3D Model of the bearing product at the top of the page to clearly identify what the product looks like.
- Basic Product Information to help guide the user in understanding the key product attributes.
- A 2D Line Drawing with dimensional call outs that have been standardized across product types for easy comparisons.
- Table with inch and metric dimensions listing the critical dimensions for design and selection as shown in the 2D line drawing, including the bearing dynamic capacity, and mass in lbs. and kgs.
- Special notes or instructions pertaining to the specific product shown.

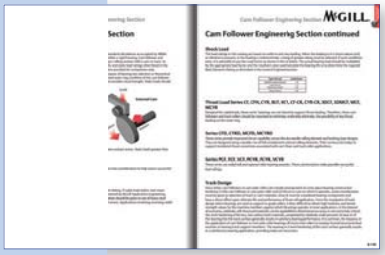

Engineering Section

Technical information pertaining to the information found in the section. The technical information will vary slightly by product type such as speed limits, lubrication recommendations, series codes, internal and mounting clearances, and mounting instructions.

Table of Contents


McGILL
CF 2
McGILL MR 32 SS
ROLLWAY T 16050 USA
McGILL
SB 22207 W33 SS

Bearing Basics

Table of Contents

Bearing Selection

Introduction

The following general information will serve the purpose of aiding the machine designer or bearing user when applying the bearings covered in this catalog. Additional data dealing solely with each type of bearing is found in each respective section. Cross references are made whenever necessary. Engineering data should be carefully considered in selecting the proper design and size bearing.

For those applications where unusual or abnormal operating conditions exist, it is advisable to consult Application Engineering for recommendations. Examples of such conditions requiring special consideration are those involving high or low temperatures, misalignment, shaft and housing fits that might cause the bearing to be too tightly fitted internally after mounting, vibration, moisture, contamination, etc.

Application Considerations

The proper selection and application of power transmission products and components, including the related area of product safety, is the responsibility of the customer. Operating and performance requirements and potential associated issues will vary appreciably depending upon the use and application of such products and components. The scope of the technical and application information included in this publication is necessarily limited. Unusual operating environments and conditions, lubrication requirements, loading supports, and other factors can materially affect the application and operating results of the products and components and the customer should carefully review its requirements. Any technical advice or review furnished by Regal Power Transmission Solutions and its divisions with respect to the use of products and components is given in good faith and without charge, and Regal assumes no obligation or liability for the advice given, or results obtained, all such advice and review being given and accepted at customer's risk.

For a copy of our **Standard Terms and Conditions of Sale, Warranty, Limitation of Liability and Remedy**,please contact Regal Power Transmission Solutions customer service, 1-800-626-2120. These terms and conditions of sale, disclaimers and limitations of liability apply to any person who may buy, acquire or use an Regal Power Transmission Corporation product referred to herein, including any person who buys from a licensed distributor of these branded products.

Nuclear Applications
Goods and/or Services Sold Hereunder are not for use in any Nuclear and Related Applications

Buyer accepts goods and/or services with the foregoing understanding, agrees to communicate the same in writing to any subsequent purchaser or users and to defend, indemnify and hold harmless Seller from any claims, losses, suits, judgments and damages, including incidental and consequential damages, arising from such use, whether the cause of action be based in tort, contract or otherwise, including allegations that the Seller's liability is based on negligence or strict liability.

Bearing Selection Continued

Bearing Selection

Before beginning the bearing selection process for a particular application it is important to have a good idea of where the bearing will be installed, what its purpose will be, what operating conditions will the bearing be expected to function in, and a desired bearing life. Each bearing type has certain characteristics which make it suitable for a certain application(s). Having comprehensive knowledge of these requirements will aid in bearing selection. In most cases there are several factors to consider when choosing a bearing type. Therefore the following information is to be used only as a guide. In the selection process the following factors must be considered:

1. **Equipment constraints**
2. **Load – Magnitude and Direction**
   - Magnitude
   - Direction
     - ◊ Radial
     - ◊ Thrust
     - ◊ Combined
3. **Misalignment**
   - Static
   - Dynamic
4. **Expansion**
5. **Noise**
6. **Vibration and shock loading**
7. **Environment**
8. **Bearing Type**

Equipment Constraints

Sometimes, bearing bore diameter and housing type are predetermined by the equipment and shaft diameter with which the bearing will be used. Small diameter shafts typically are used when light loads are transferred and may lead to the choice of a ball bearing. Higher loads typically dictate larger shaft diameters and then taper or spherical roller bearings may be needed. For mounted bearings, equipment constraints can also dictate what type of housing style can be used (i.e. pillow block, 2-bolt flange, 4-bolt flange, etc.).

Load – Magnitude and Direction

Load magnitude typically dictates size of bearing required but it can also affect the type of bearing. Ball bearings work well in light to moderate loads, roller bearings work well for moderate to heavy loads. Bearings with a full complement of rollers are generally better for higher loads than a caged bearing of the same size and full complement bearings are also recommended for applications with oscillatory rotation.

Load direction can be radial, axial, or a combination of these two directions. These directions along with load magnitude are deciding factors in selection of bearing type.

Bearing Selection Continued

Radial loading is the most common type of bearing load and is defined as a load perpendicular, or 90 degrees to the shaft centerline. Most ball and roller bearings are designed to accept primarily radial loads.

Thrust, or axial, loading is defined as loading in the direction through the shaft centerline. The ability of the bearing to carry a thrust load is dependent on the bearing contact angle geometry. The larger the contact angle the more thrust load that can be carried. Typically, tapered roller and double row spherical roller bearings are better suited for applications with a higher degree of thrust load.

Combination loading consists of both a radial and a thrust load acting simultaneously on the bearing. When combination loads are acting on a bearing it is necessary to determine an equivalent radial load when calculating bearing life.

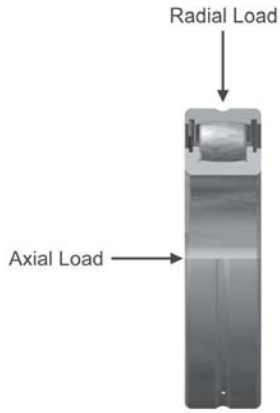

Misalignment

Bearing misalignment is a result of angular misalignment between the shaft and housing. This misalignment comes in two different forms, static and dynamic. Static misalignment is the outcome of bearings that are mounted on different planes causing an angular shaft displacement and resulting in the bearing operating under a fixed misalignment angle. Mounted ball bearings, certain series mounted roller bearings, and spherical rollers bearings have a design feature that allows them to accommodate a limited degree of fixed misalignment. Dynamic misalignment is an eccentric shaft rotation caused by shafting imperfections and resulting in the bearing operating under a varying misalignment angle. Spherical roller bearings are typically best suited for applications involving dynamic misalignment.

Static System Misalignment

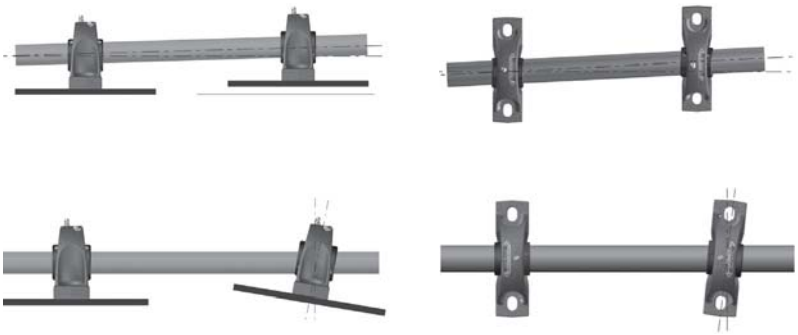

Dynamic System Misalignment

Bearing Selection Continued

Each bearing type is capable of accommodating a certain amount of either static, dynamic, or combination misalignment. When application misalignment exceeds the allowable limit for the particular bearing, increased contact stresses between bearing rolling elements and raceways occurs and bearing life is reduced. Individual product sections contain additional information regarding what types and degrees of misalignment each bearing type is capable of handling.

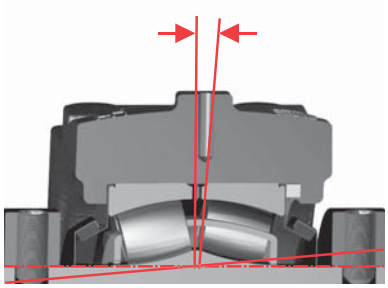

Example of Sealmaster Mounted Spherical Roller Bearing Misalignment

Expansion

For applications in which shaft linear growth must be accommodated, this expansion must be taken into account with either the bearing mounting method or bearing type selection. Typically this expansion is due to the difference in thermal changes in the shaft versus that in the support structure. Therefore change in length can be determined using standard thermal expansion equations. The maximum temperature difference between the shaft and the support structure should be used in the calculation of the shaft growth. Likewise, consideration must be given to the shaft and structure materials, as different materials can have different rates of expansion or contraction.

To allow for shaft expansion, some applications will require the bearing to be of an expansion type. An expansion type bearing is one that has an internal design feature which allows it to accommodate axial expansion. Before installation, make sure proper linear shaft expansion is accounted for. Expansion units should be placed in a location where relative movement between the bearing insert and the housing can be tolerated. For most applications using expansion type units, the fixed unit (non-expansion unit) is placed at the drive end of the shaft. Not providing expansion where necessary may result in undesirable thrust loads, thus reducing bearing operating life.

Example of Sealmaster Mounted Spherical Roller Bearing Expansion and Non-Expansion

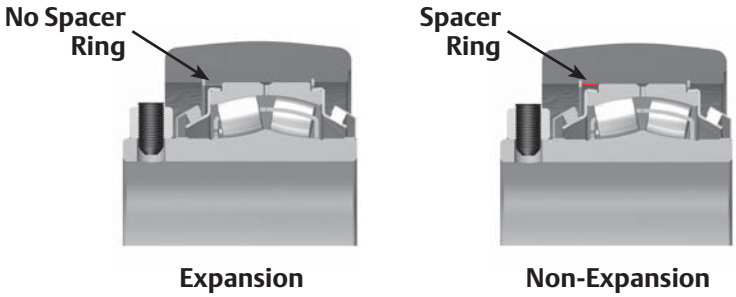

For more information on Bearing Basics, please contact Application Engineering (800) 626-2093.

Bearing Selection Continued

Noise

Noise sensitive applications such as fans require smooth running bearings. These are typically low duty environments which makes ball bearings a good choice. Concentric locking mechanisms are preferred to keep vibration at a minimum, but not required. Regal Power Transmission Solutions offers a special suffix that can be applied to many mounted ball bearing products for air handling applications. This option offers a loose fit between the bearing insert and housing for easy self-aligning, as well as noise testing of all units.

Vibration and Shock Loading

Vibration and shock loading present in vibratory conveyors, shakers, and other heavy industrial applications transfer large forces to bearings and accompanying raceways. These loads create large stresses at the interface between the rolling elements and raceways and can cause considerable damage and a reduction of bearing life. Roller bearings may be a good selection because of their larger supporting contact area with the bearing races. This allows loads to be carried over a larger area thus reducing stress. Special housing fits for mounted bearings can be added from the factory to aid in longer bearing life.

Environment

Environmental factors such as solids contamination (particle type, size, quantity), exposure to moisture (water, acid caustic),and thermal conditions are important variables in bearing selection. Bearing components (seals, grease, bearing material, etc.) can be modified in order to better suit a specialized application. Availability of special features may be affected by shaft size, bearing type, and housing type therefore this must be considered in the bearing selection process. Individual product sections contain additional information regarding these specialized features and availability.

Bearing Type

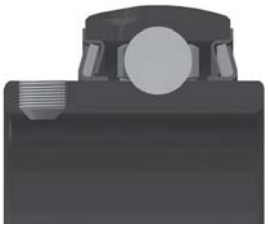

Radial Ball Bearings

Radial ball bearings create a fairly small elliptical contact between the ball-path and rolling element thus distributing loads across a small area. Surface contact is minimized and less friction and heat is generated which allows ball bearings a higher speed range. This small contact area also limits ball bearings to accepting only light to moderate loads. Radial ball bearings have a zero degree free contact angle but can accept light thrust loads (in combination with a radial load) due to the shape geometry of their raceways. Mounted ball bearing units have some degree of external static self-aligning capability (the bearing insert can misalign with respect to the housing). Mounted ball bearings come in a variety of housing styles and features to suit a wide variety of applications.

Bearing Selection Continued

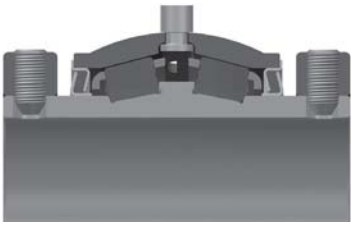

Tapered Radial Roller Bearings

Tapered radial roller bearings create a line contact between the raceway and rolling element distributing loads across a larger area. Also, a double row provides twice as many rolling elements available to carry bearing load which increases bearing load capacity. Because tapered roller bearings are set at an angle, they can accept heavy loads from both the radial (Y) and thrust (X) directions. This makes them ideal for tough applications such as mining, bulk material handling, and off-highway applications. Many mounted tapered roller bearing units are similar to mounted ball units in that they are externally self aligning to accommodate some static misalignment. There are a variety of housing styles and features available.

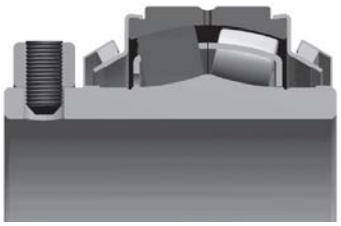

Spherical radial roller bearings

Spherical radial roller bearings have a barrel shaped profile. This combined with a curved raceway allows relative motion between the rolling elements and raceways (internally self-aligning). This attribute makes them ideal for application where both static and dynamic misalignment is present. Spherical roller bearings create an elliptical shaped contact area that is larger than a ball bearing. Single row design spherical roller bearings should not be used in combined loading applications when the thrust load exceeds 20% of the applied radial load. Mounted spherical roller bearings employ a double row design, which are set at an angle and can accept a limited degree of thrust load in combination with radial load. Due to some sliding that occurs at the bearing and raceway interface, spherical roller bearings are generally not suitable for higher speed applications.

Needle Radial Roller Bearing

A needle radial roller bearing is a cylindrical roller where the length of the roller is significantly larger than the diameter. The rollers make a large line contact with the raceways, allowing them to accept fairly high radial load. Needle roller bearings also do not have a contact angle and are not recommended in applications where thrust loading is present. If high thrust loads are present, provisions should be put in place to allow bearings better suited to handle the thrust loads. Needle bearing assemblies typically consist of an inner race (or sometimes a precision shaft), a needle cage which orients and contains the needle rollers, the needle rollers themselves, and an outer race. The needle cage is sometimes omitted and a full complement of rollers is used instead for oscillatory and high load applications.

Bearing Selection Continued

Cylindrical Radial Roller Bearings

Cylindrical radial roller bearings are similar in design to needle roller bearing but the dimensions of diameter and roller length are closer in magnitude. The rolling elements create a line contact with the raceways and can handle relatively high radial loads. These bearings typically use cage separated rollers which allows for higher operating speeds. Cylindrical roller bearings can also accept incidental to light thrust loads. Rollway Cylindrical roller bearings are crowned to maximize load carrying potential, reduce edge loading, and tolerate some minor misalignment.

Thrust Cylindrical Roller

Thrust cylindrical roller and thrust spherical roller bearings use rolling elements as described above. However, instead of radial rings for raceways, thrust bearings use plate rings so that these designs can be applied to support pure thrust loads. These designs do not support radial loads. The cylindrical roller type provides a fairly rigid construction capable of supporting fairly heavy thrust loads. The spherical roller type can also support heavy thrust loads, and can also accommodate some misalignment.

Rod ends

Rod ends are designed to provide an efficient smooth transfer of motion in a wide variety of applications and equipment. This motion is usually associated with various types of linkage controls. Commonly referred to as plain or sliding bearings, they are designed primarily to assist and provide motion transfer, support a load, allow for angular motion and angular misalignment.

Rod ends can be joined together or connected with a threaded rod or tube to form linkage assemblies allowing design engineers flexibility in transferring motion between points with long center distances. There are two surface areas in contact rubbing against each other, therefore normal operation of rod ends results in wear of the raceways leading to fatigue or fracture of the outer member. Give consideration to this in the design of the equipment. In general, rod ends are designed to accept radial loads and not intended to carry thrust loads. Applications of rod ends with thrust loading should be reviewed with Application Engineering.

Spherical Plain Bearings

Spherical plain bearings provide a similar function as rod ends and must be supported in a housing. Spherical bearings are typically more capable of supporting higher loads versus an equivalent rod end bore size. This occurs because rod end load capacity is controlled by the head and shank geometry. Spherical bearings have a larger bearing area and generally are less restricted by the housing material or dimensions in which they are mounted. Static thrust rating of plain spherical bearings is 20% of the static radial rating of each unit but proper housing design is needed to support the bearing.

Bearing Selection Guide

The following chart can be used as a reference guide when working through the selection process. More detailed information on each bearing type as well as the available housing and seal options can be found in sections dealing with the individual bearing types.

	Bearing Type	Pure Radial Loading	Pure Axial Loading	Combination Loading	High Speeds	Static Self-Aligning Capability	Dynamic Self-Aligning Capability
	Mounted Ball Bearings	●	◒	◒	●	●	○
	Mounted Taper Roller Bearings	●	◒	●	◒	◒	○
	Mounted Spherical Roller Bearings	●	◒	●	◒	●	●
	Cylindrical Roller Bearings	◒	varied based on design	○	●	○	○
	Unmounted Needle Bearings	●	○	◒	◒	○	○
	Rod Ends	●	◒	◒	◒	◒	◒
	Plain Spherical Bearings	●	◒	◒	◒	◒	◒
	Cylindrical Thrust Bearings	○	●	○	○	○	○
	Tapered Thrust Bearings	○	●	○	◒	○	○
	Journal Roller Bearings	●	○	○	◒	○	○

○ = Not Recommended

Poor ◒ ◒ ◒ ● ● Best

For more information on Bearing Basics, please contact Application Engineering (800) 626-2093.

Load Ratings and Life

Introduction

The following general information will serve the purpose of aiding the machine designer or bearing user when applying bearings covered by this catalog. Additional data dealing solely with each type of bearing is found in each respective section. Cross references are made whenever necessary. Engineering data should be carefully considered in selecting the proper design and size bearing.

For those applications where unusual or abnormal operating conditions exist, it is advisable to consult Application Engineering for recommendations. Examples of such conditions requiring special consideration are those involving high or low temperatures, misalignment, shaft and housing fits that might cause the bearing to be too tightly fitted internally after mounting, vibration, moisture, contamination, etc.

Load Ratings

The basic load rating or Basic Dynamic Rating as defined by the American Bearing Manufacturers Association (ABMA) is that calculated, constant radial load which 90% of a group of apparently identical bearings with stationary outer ring can theoretically endure for a Rating Life. For bearing types other than tapered roller, the basic rating life is one million revolutions (33 1/3 RPM for 500 hours). For tapered roller bearings, the basic rating life is ninety million revolutions. The basic load rating is a reference value only, the basic rating life value having been chosen for a means of life calculation.

It is not anticipated that bearing loading equal to the Basic Dynamic Rating would normally be applied while the bearing is rotating. Bearings in this catalog should not normally be subjected to dynamic loads greater than 50 percent of the Basic Dynamic Rating. Consult Application Engineering if such conditions exist.

Bearing Life – L10

Bearings which have been properly sized for the application, solidly mounted, lubricated, and protected will operate with minimal, if any, internal wear until fatigue of the rings or rolling elements takes place. Fatigue is the first evidence of spalling of the rolling contact surfaces of these parts, and occurs because of the repeated stressing of the contacts.

The “life” of an individual bearing is defined as the number of revolutions (or hours at a given constant speed) which the bearing runs before the first evidence of fatigue develops in the material of either ring or of any of the rolling elements. The L10 or “rating life” of a group of apparently identical roller bearings is defined as the number of revolutions (or hours at some given constant speed) that 90% of the group of bearings will complete or exceed before the first evidence of fatigue develops.

Load Ratings and Life

Life Calculations

The L10 (rating) life for any given application and bearing selection can be calculated in terms of millions of revolutions by using the bearing Basic Dynamic Rating (BDR) and applied radial load (or, equivalent radial load in the case of radial bearing applications having combined radial and thrust loads). The L10 life for any given application can be calculated in terms of hours, using the bearing Basic Dynamic Rating, applied load (or equivalent radial load) and suitable speed factors, by the following equation:

$$L_{10} = \left(\frac{C}{P}\right)^{P} \times \frac{1{,}000{,}000}{60 \times n} = \left(\frac{C}{P}\right)^{P} \times \frac{16667}{n}$$

Where: L_{10} = The # of hours that 90% of identical bearings under ideal conditions will operate at a specific speed and condition before fatigue is expected to occur.
C = Basic Dynamic Rating (lbs) 1,000,000 Revolutions
P = Constant Equivalent Radial Load (lbs)
p = Exponent for life
3 for ball bearings
10/3 for roller bearings
n = Speed (RPM)

For thrust cylindrical roller and thrust tapered roller bearings the above equations change to:

$$L_{10} = \left(\frac{C}{P}\right)^{10/3} \times \frac{1{,}000{,}000}{60 \times n} = \left(\frac{C}{P}\right)^{10/3} \times \frac{16667}{n}$$

Where: L_{10} = The # of hours that 90% of identical bearings under ideal conditions will operate at a specific speed and condition before fatigue is expected to occur.
C = Basic Dynamic Thrust Rating (lbs) 1,000,000 Revolutions
P = Constant Equivalent Thrust Load (lbs)
p = 10/3
n = Speed (RPM)

The BDR for tapered roller bearings is based on 90 million revolutions instead of one million for other types of bearings. Therefore there is a specific equation used to calculate their L10 life.

$$L_{10} = \left(\frac{C90}{P}\right)^{10/3} \times \frac{90{,}000{,}000}{60 \times n} = \left(\frac{C90}{P}\right)^{10/3} \times \frac{1{,}500{,}000}{n}$$

Where:
Where: L_{10} = The # of hours that 90% of identical bearings under ideal conditions will operate at a specific speed and condition before fatigue is expected to occur.
C90= 2-Row Basic Dynamic Rating (lbs) 90,000,000 Revolutions
P = Constant Equivalent Radial Load (lbs)
n = Speed (RPM)

* For speeds less than 50 RPM, use 50 RPM when doing L10 calculations.

Note: L10 life does not apply to rod ends and plain spherical bearings due to the sliding motion between components versus a rolling motion. Normal operation of these types of bearings results in wear of the raceways or fatigue or fracture of the outer member. Give consideration to this in the design of the equipment.

For more information on Bearing Basics, please contact Application Engineering (800) 626-2093.

Load Ratings and Life Continued

Additionally, the ABMA provides application factors for all types of bearings which need to be considered to determine an adjusted Rated Life (Lna). L10 life rating is based on laboratory conditions yet other factors are encountered in actual bearing application that will reduce bearing life. Lna life rating takes into account reliability factors, material type, and operating conditions.

$$L_{na} = a_1 \times a_2 \times a_3 \times L_{10}$$

Where:

L_{na} = Adjusted Rated Life.

a_1 = Reliability Factor. Adjustment factor applied where estimated fatigue life is based on reliability other than 90% (See Table No 1).

Table No. 1 Life Adjustment Factor for Reliability

Reliability %	L_{na}	a_1
90	L10	1
95	L5	0.62
96	L4	0.53
97	L3	0.44
98	L2	0.33
99	L1	0.21
50	L50	5

a_2 = Material Factor. Life adjustment for bearing race material. Regal Power Transmission Solutions bearing races are manufactured from bearing quality steel. Therefore the a_2 factor is 1.0.

a_3 = Life Adjustment Factor for Operating Conditions. This factor should take into account the adequacy of lubricant, presence of foreign matter, conditions causing changes in material properties, and unusual loading or mounting conditions. Assuming a properly selected and mounted bearing having adequate seals and lubricant operating below 250°F and tight fitted to the shaft, the a_3 factor should be 1.0.

Mounted bearings are typically “slip fitted” to the shaft and rely on design features such as the inner race length and locking device for support. ABMA recommends an a_3 factor of .456 for “slip fit” ball bearings.

Vibration and shock loading can act as an additional loading to the steady expected applied load. When shock or vibration is present, an a_3 Life Adjustment Factor can be applied. Shock loading has many variables which often are not easily determined. Typically, it is best to rely on one’s experience with the particular application. Consult Application Engineering for assistance with applications involving shock or vibration loading.

The a_3 factor takes into account a wide range of application and mounting conditions as well as bearing features and design. Accurate determination of this factor is normally achieved through testing and in-field experience. Regal Power Transmission Solutions offers a wide range of options which can maximize bearing performance. Consult Application Engineering for more information. Example calculations can be found in the individual engineering sections at the end of the various product sections.

Load Ratings and Life Continued

Variable Load Formula

Root mean load (RML) is to be used when a number of varying loads are applied to a bearing for varying time limits. Maximum loading still must be considered for bearing size selection.

$$\text{RML}^* = \sqrt[p]{\frac{(L_1{}^pN_1) + (L_2{}^pN_2) + (L_3{}^pN_3)}{100}}$$

Where:

p = Exponent for life
3 for ball bearings
10/3 for roller bearings

L_1, L_2, etc. = Load in pounds

N_1, N_2, etc. = Percent of total time operated at loads L_1, L_2, etc.

* Apply RML to rating at mean speed to determine resultant life.

Mean Speed Formula

The following formula is to be used when operating speed varies over time.

$$\text{Mean Speed} = \frac{S_1N_1 + S_2N_2 + S_3N_3}{100}$$

S_1S_2, etc = Speeds in RPM
N_1N_2, etc = Percentage of total time operated at speeds S_1S_2, etc

Bearing Life In Oscillating Applications

The equivalent rotative speed (ERS) is used in life calculations when the bearing does not make complete revolutions during operation. The ERS is then used as the bearing operating speed in the calculation of the L10 (Rating) Life. The formula is based on sufficient angular rotation to have roller paths overlap.

ERS = Equivalent Rotative Speed
N = Total number of degrees per minute through which the bearing will rotate.

$$\text{ERS} = \frac{N}{360}$$

In the above formula, allowance is made for the total number of stress applications on the weakest race per unit time, which, in turn, determines fatigue life and the speed factors. When the oscillation angle is very small, fretting corrosion can take place. The theory behind fretting corrosion is best explained by the fact that the rolling elements in small angles of oscillation retrace a path over an unchanging area of the inner or outer races where the lubricant is prevented by inertia from flowing in behind the roller as the bearing oscillates in one direction. Upon reversal, this small area of rolling contact is traversed by the same roller in the dry state. The friction of the two unlubricated surfaces causes fretting corrosion and produces failures which are unpredictable from a normal life standpoint. For applications with small angles of oscillation, it is recommended that it be reviewed with Application Engineering to select a bearing type that will help minimize potential fretting corrosion.

Load Ratings and Life Continued

With a given bearing selected for an oscillating application, the best lubrication means is a light mineral oil under positive flow conditions. With a light oil, there is a tendency for all areas in the bearing load zone to be immersed in lubricant at all times. The full flow lubrication dictates that any oxidized material which may form is immediately carried away by the lubricant, and since these oxides are abrasive, further wear tends to be avoided. If grease lubrication must be used, it is best to consult with either the bearing manufacturer or the lubricant manufacturer to determine the best possible type of lubricant. Greases have been compounded to resist the detrimental effect of fretting corrosion for such applications.

Static Load Rating

The "static load rating" for rolling element bearings is that uniformly distributed static radial load acting on a non-rotating bearing, which produces a contact stress of 580,000 psi for roller bearings and 609,000 psi for ball bearings, at the center of the most heavily loaded rolling element. At this stress level, plastic deformation begins to be significant. Experience has shown that the plastic deformation at this stress level can be tolerated in most bearing applications without impairment of subsequent bearing operation. In certain applications where subsequent rotation of the bearing is slow and where smoothness and friction requirements are not too exacting, a higher static load limit can be tolerated. Where extreme smoothness is required or friction requirements are critical, a lower static load limit may be necessary.

Minimum Bearing Load

Skidding, or sliding, of the rolling elements on the raceway instead of a true rolling motion can cause excessive wear. Applications with high speeds and light loading are particularly prone to skidding. As a general guideline, rolling element bearings should be radially loaded at least 2% of Basic Dynamic Rating for roller bearings and 1% of Basic Dynamic Rating for ball bearings. For applications where load is light relative to the bearings dynamic load rating, consult Application Engineering for assistance.

Load Ratings and Life Continued

Computing Bearing Loads

In the computation of bearing loads in any application of a Regal Power Transmission Solutions unit, the principal factor determining the selection of the unit is the equivalent radial load to which the bearing will be subjected. These radial loads result from any one or any combination of the following sources:

1. Weights of machine parts supported by bearings.
2. Tension due to belt or chain pull.
3. Centrifugal force from out of balance, eccentric or cam action.

The resulting load from any one, or any combination of the above sources is further determined by knowing:

1. The magnitude of the load.
2. Direction of the load.
3. The point of load application.
4. The distance between bearing centers.

Bearing loads are the result of force acting on the shaft. Direction, magnitude, and location with respect to the bearings must be considered when calculating bearing loads. The following cases are typical examples of loads encountered and methods of calculating bearing loads.

CASE #1
Drive Load Calculation

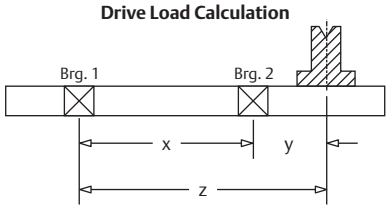

$$P = \frac{126{,}000 \times HP}{RPM \times d} \times K$$ = Apply P to Case 2, 3 or 4 if applicable

HP = horsepower
RPM = revolutions per minute
d = pitch of pulley in inches
K = constant for type of drive used
K = 1.5 for V-belts
K = 2 to 3 for flat transmission belts
K = 1.1 for chain drives

CASE #2
Cantilever and Drive

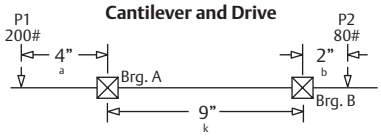

$$\text{Load on Bearing A} = \frac{P_1 \times (a + k) - (P_2 \times b)}{k}$$

$$= \frac{200 \times (4 + 9) - (80 \times 2)}{9}$$

= 271 lbs.

$$\text{Load on Bearing B} = \frac{P_2 \times (k + b) - (P_1 \times a)}{k}$$

$$= \frac{80 \times (9 + 2) - (200 \times 4)}{9}$$

= 9 lbs.

CASE #3
Straddle, Cantilever Drive

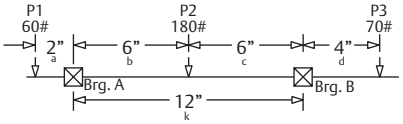

$$\text{Load on Bearing A} = \frac{P_1 \times (k + a) + (P_2 \times c) - (P_3 \times d)}{k}$$

$$= \frac{60 \times (12 + 2) + (180 \times 6) - (70 \times 4)}{12}$$

= 137 lbs.

$$\text{Load on Bearing B} = \frac{-(P_1 \times a) + (P_2 + b) + P_3 \times (k + d)}{k}$$

$$= \frac{-(60 \times 2) + (180 \times 6) + 70 \times (12 + 4)}{12}$$

= 173 lbs.

CASE #4
Straddle Mount, Cantilever Drive

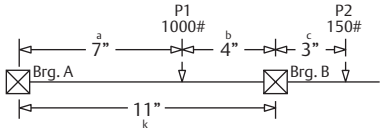

$$\text{Load on Bearing A} = \frac{(P_1 \times b) - (P_2 \times c)}{k}$$

$$= \frac{(1000 \times 4) - (150 \times 3)}{11}$$

= 323 lbs.

$$\text{Load on Bearing B} = \frac{(P_1 \times a) + (c + k) \times (P_2)}{k}$$

$$= \frac{(1000 \times 7) + (3 + 11) \times (150)}{11}$$

= 827 lbs.

CASE #5
Vibrating Drives

Load due to Centrifugal and Inertial Forces - In a shaker or gyrating screen bearing application, the load on the bearings is increased by sudden stopping, starting, and reversing of typically large loads. This can be expressed as a basic physical law:

Force = Mass x Accelerations

In order to use this law, we develop from it the following equation:

$$F = .000341 \times WR(RPM)^2$$

Where: F = Load of force in lbs.
W = Weight of rotating mass in lbs.
R = Radius of rotation or throw in feet
RPM = Shaft rotation in revolutions per minute

What is the centrifugal bearing load on a shaker screen which weighs 2,500 lbs., has a throw of 1/4 in. and whose shaft speed is 500 RPM?

$$F = .000341 \times 2{,}500 \times \frac{.250}{12} \times (500)^2 = 4{,}440 \text{ lbs.}$$

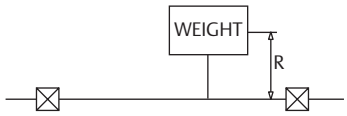

For more information on Bearing Basics, please contact Application Engineering (800) 626-2093.

Lubrication

Proper lubrication is essential to achieving desired bearing life. Each bearing application creates individually different requirements for adequate lubrication. To assist in selecting the lubricant and lubrication method, the following information is furnished as a general guide. Generally, the assistance of a qualified engineering representative from a lubricant company should be enlisted. If specific recommendations are required for a particular application, consult Application Engineering.

Lubricants are used to:

a. Reduce friction and wear
b. Reduce adhesion
c. Provide a barrier to contamination
d. Cool the moving elements
e. Protect against corrosion

Adequate lubrication is necessary in the rolling-contact areas, on contacts between rolling element and retainer, on contacts between a roller end and flange and on other areas where sliding takes place. Lubrication is required to reduce galling, adhesion, wear, corrosion, scuffing, welding and pitting. Of primary importance is adequate lubrication of the rolling element (Hertzian) contacts to avoid reduction of bearing fatigue life. These heavily loaded areas between the rolling elements and raceways impose the most critical requirement on the lubricant and its properties.

Lubricants of too low an initial viscosity or those too sensitive to temperature changes may induce shallow spalls under conditions of high slip (as in misalignment) or may induce plastic flow of the contacting surfaces.

Lubricants are often limited by their ability to:

a. Replenish themselves
b. Dissipate frictional heat
c. Resist high environmental temperatures
d. Remain stable under operating conditions

One important purpose of a lubricant is to prevent corrosion of the bearing surfaces engaged in rolling (Hertzian) contact. Many applications involve environments which allow water to accumulate in the bearing cavity. Whether from direct intake or condensation, moisture is detrimental and a lubricant must be selected to disperse the water or to prevent its attack on the metal since corrosion drastically reduces bearing life. Applications involving heavy loads and high operating temperatures also require careful approaches. Here extreme pressure (EP) lubricants should be used. High shaft speeds generally dictate lubricant selection based on the need for cooling, the suppression of churning or aeration of conventional lubricant and, most important of all, the inherent speed limitations of certain bearing types.

Elastohydrodynamic (EHL) lubrication is the model that explains the lubrication of anti-friction bearings. EHL takes into account the deformation of the rolling elements and raceways as well as the increased viscosity of the lubricant in the load zone.

Lubrication Continued

In a rotating rolling element bearing there is one of three types of lubrication conditions present; 1) boundary, 2) thin film, 3) thick film. Bearing operating speed is an important element in determining the lubrication condition. Boundary lubrication occurs when there is metal on metal contact between rolling elements and races. This may be due to low speed and/or oil viscosity that is too low to separate the surfaces. Boundary lubrication is the most severe condition for antifriction bearings and distress of the rolling elements and races will occur. In the thin film condition, partial separation of the surfaces of the rolling elements and races occur with some asperities in contact. This condition may be due to low speed and/or oil viscosity too low to separate the surfaces completely. Some distress of the bearing surfaces will take place in thin film lubrication. Thick film lubrication is the preferred condition for optimum bearing performance. The speed of the bearing and/or the lubricant viscosity is sufficient to separate the rolling elements and raceways. Higher viscosity oils (or higher operating speeds) can help to attain the thick film lubrication condition, but excessively high oil viscosities may lead to higher operating temperatures from churning of the oil or skidding of the rolling elements. Lower viscosity oils sufficient to attain a thick film lubrication condition at the operating speed are selected in high speed applications as they have less tendency to churn or cause skidding.

Grease Lubrication

Greases are applied where fluid lubricants cannot be used because of the difficulty of retention, relubrication, or because of the danger of churning. Rolling contact bearings are often grease lubricated because grease is easier to retain in the housing over a longer period than oil and grease acts, to some extent, as a seal against the entry of dirt and other contaminates into the bearing. Greases are usually made by using soap or other inorganic compounds to thicken petroleum or synthetic oils. The thickener is used to immobilize the oil, acting as a reservoir to release the oil at a slow rate. Though the thickener may have lubrication properties itself, the oil bleeding from the bulk of the grease is felt to be the determining factor. When the oil has depleted to approximately 50% of the total weight of the grease, the lubricating ability of the grease becomes doubtful.

Greases are divided into grades by the NLGI (National Lubricating Grease Institute), ranging from 0, the softest, up through 6, the stiffest. The grade is determined by testing a penetrometer, measuring the depth of penetration of a specific weighted cone. Most greases have thixotropic properties (they soften with working) and, as such, must be considered for their worked properties rather than in the “as-received” condition. Conversely, many greases are found to stiffen when exposed to high shear rates in automatic grease dispensing equipment.

To limit shock loads and settling, grease-lubricated bearing housings should have dividers or seals to keep the bulk of the grease in place. Grease lubrication depends on a relatively small amount of mobile lubricant (the oil bled out of the bulk) to replenish that thrown out of the bearing during operation. If the space between the bulk of the grease and the bearing is too large, then a long delay (determined by the grease bleed rate and its temperature) will be encountered before lubricant in the bearing is resupplied. This delay may affect bearing life.

Grease is normally applied with the material in the cavity contacting the bearing in the lower quadrant for bearings mounted on horizontal shafts. The initial action of the bearing when rotated is to purge itself of excess grease and to clear a path for bleed oil to enter the bearing. Therefore, greases selected are often of an NLGI grade 2 or 3 consistency, referred to as the “channeling” variety.

Lubrication Continued

Grease usually consists of three primary components: oil, thickener, and additives.

Oil is the primary lubricating component in grease and consists of two types: petroleum and synthetic. Petroleum oils are the primary oils used today. Synthetic hydrocarbons can be thought of as synthetic petroleum oils. Other synthetics include esters, silicones, fluorinated hydrocarbons, etc.

Oil is a fluid and can be obtained in varying viscosities. Viscosity refers to the "thickness" of the oil and is usually directly related to an oils' shear strength or its ability to resist loading. Selection of oil viscosity for rolling element bearing applications is normally dependent on bearing size, speed, load and operating temperature. Method of lubrication may also affect the selected oil viscosity. With these factors known, selection of proper oil viscosity can be made on the basis of elastohydrodynamic analysis, which can be provided by Application Engineering.

The thickeners primary purposes are to retain the oil so that it remains in the bearing, release the oil as needed, and reabsorb the oil as needed. The thickener can also provide additional sealing and protection from contamination and heat dissipation. There are many types of grease thickeners including lithium, calcium, sodium, aluminum, polyurea, etc.

Lithium Soap Grease

For grease lubrication, lithium soap base greases are most common. They are preferred for needle bearings in general because of their ability to stand up under churning action of rollers in a confined space. These greases are not channeling types, therefore provide constant lubrication for roller contact surfaces. They are also insoluble in water. Typical operating temperature range is approximately -30°F to +250°F (-35°C to +120°C).

Sodium Soap Grease

Sodium soap greases are suitable for many applications since they do have a relatively broad useful operating temperature range. However, they are generally restricted to the lower operating speeds because they are typically fibrous and more adhesive than other grease types. Because of this, they resist throw-off, but the fibrous texture causes higher operating temperatures than lithium or calcium soap greases. Very small amounts of water can be absorbed by sodium soap greases, which may be an advantage in some applications; however, this type grease will be washed away if excessive water is present. Typical operating temperature range is approximately -5°F to +200°F (-20°C to +93°C).

Calcium Soap Grease

Calcium soap greases are typically used because they are water resistant. They are smooth textured and have good mechanical stability, but are limited to lower operating temperatures than lithium or sodium soap greases. Typical operating temperature range is approximately -5°F to +150°F (-20°C to +65°C).

Lubrication Continued

Polyurea Thickened Grease

Polyurea thickened greases are smooth textured with good mechanical stability. They exhibit very good oxidation and water resistance properties. Oxidation resistance makes this grease type suitable for higher operating temperatures. Typical operating temperature range is approximately -30°F to +350°F (-35°C to +175°C).

Bentonite or Clay Thickened Grease

These smooth textured greases have very good heat resistance, as the thickener will not melt. They are limited by the base oil temperature properties. Operating temperatures up to +350°F (+175°C) are typical, with intermittent operation up to +450°F (+230°C) sometimes possible. Low temperature properties are satisfactory. However, this type is often formulated with a high oil viscosity for high temperature. Such formulations may not be suitable for low temperature applications.

Greases also can also contain additives. These additives may increase load capacity, resist corrosion, resist temperature extremes, resist oxidation, affect oil viscosity, thickener consistency characteristics, as well as many other characteristics.

Consult Application Engineering when using EP additives or other solid additives such as molybdenum disulfide, graphite, brass, nickel, etc.

Food Grade Grease

"Food Grade" grease may be desirable in applications that are within close proximity to food production. "Food Grade" grease is an option in most Regal Power Transmission Solutions bearing products. Please consult Application Engineering for current specifications.

Reduced Maintenance

Some bearings offered by Regal Power Transmission Solutions have features which can help extend bearing operating life and therefore are not provided with provisions for relubrication. This type of bearing may have an operating life limited by the life of the original grease fill and the ability of the seals to protect the bearing from contamination. Regal Power Transmission Solutions has many seal and grease options for reduced maintenance bearings. Further information for these offerings can be found in the respective bearing type Engineering sections.

High Temperature Grease

High temperature grease options are available for most Regal Power Transmission Solutions bearings. Consult Application Engineering for a suggested lubricant for your application. Higher operating temperatures can also affect required lubrication interval. Refer to the lubrication interval information in the respective bearing type Engineering section.

Lubrication Continued

Grease Compatibility

Combinations of greases with different thickeners can result in a mixture having poorer performance or physical properties than the individual components. Incompatibility can also result from other than different thickeners. Because grease is a combination of thickener, oil and additives, it is also possible that any of these components may be incompatible with those of the other grease. Therefore caution should be used when relubricating with or combining different greases. Contact Application Engineering for current grease specifications. Contact your grease manufacturer for grease compatibility.

Petroleum oils and synthetic hydrocarbons are, generally speaking, compatible. Other synthetic oils are, more often than not, incompatible with other oils.

Additives may cause compatibility problems in some cases. Caution should be used when relubricating with or combining different greases. Contact Application Engineering for current grease specifications and your grease manufacturer to verify grease compatibility.

Oil Lubrication

Oil lubrication is normally used when speeds and temperatures are high or when it is desired to have a central oil supply for the machine as a whole. Cooled oil is sometimes circulated through the bearing to carry off excess heat resulting from high speeds heavy loads. Oil for anti-friction bearing lubrication should be well refined with high film strength, good resistance to oxidation and good corrosion protection. Anti-oxidation additives are generally acceptable but are of significance only at higher operating temperatures (over 185 °F). Anti-corrosion additives are always desirable.

Since oils are considerably more uniform in their characteristics than greases, their selection is much easier. The primary requirement, following viscosity, is a high grade mineral oil — not animal or vegetable oils which have a tendency to deteriorate. The oil must be resistant to oxidation, gumming and evaporation so that viscosity assumes the important role. For extremely low starting temperatures, an oil must be selected which has a sufficiently low pour point so the bearing will not be locked by stiff oil. The oil level should normally be maintained at the center of the lower-most rolling element when the bearing is stationary. An over supply of lubricant causes excessive churning action and can lead to heat generation. Oils of varying viscosity may be selected, depending on application conditions. Selection of oil viscosity for rolling element bearing applications is normally dependent on bearing size, speed, load and operating temperature. Method of lubrication may also affect the selected oil viscosity. With these factors known, selection of proper oil viscosity can be made on the basis of elastohydrodynamic analysis, which can be provided by Application Engineering. A general rule is to maintain the following lubricating oil viscosities for the respective bearing types at the bearing operating temperature.

Product	Viscosity at Operating Temperature
Ball	70 SUS (13 cSt)
Needle and Spherical Roller	100-150 SUS (30 cSt)
Cylindrical Roller	110 SUS (23 cSt)
Cylindrical Thrust	125 SUS (26 cSt)
Tapered and Tandem Thrust	160 SUS (34 cSt)

Lubrication Continued

Oil Lubrication Systems

This method of lubrication is generally applicable to unmounted bearing products. The lubrication system must provide each roller bearing with a uniform, continuous supply of clean oil and must satisfy the cooling requirement of the bearing. Oil lubrication systems are also designed to meet the following needs:

a. Adaptability to function over the range of variables encountered in the operating regime
b. Reliability in a given operating environment and over the length of the normal maintenance periods
c. Maintainability
d. Overall ability to meet the requirements of the system application
e. Relative cost when compared to the cost of machine or application

The table below provides a list of commonly used lubrication systems and shows some of the significant features that must be considered in their design and selection for roller bearing applications.

Lubrication System	Initial Cost	Required Maintenance	Oil Flow	Cooling	Reliability	Sensitivity to Environmental Changes	Sealing Requirements
Manual	Low	High	Variable and dependent on worker for continuity	Minimal and variable	Poor	Highly adaptable	Not Significant
Drip Feed	Low	Contingent upon type of service and location of lubrication points	May vary with time	Low	Average	May be affected by temperature variations	Not Significant
Splash	Dependent on Design	Negligible	Dependent upon maintenance of oil level in housing	Fair	High	Sensitive to low temperature. may accumulate moisture due to condensation	Generally critical
Wick Feed	Low to Medium	Medium	Uniform, filtered, continuous	Negligible	High, if wick is maintained	Sensitive to low temperature	Not Significant
Pressure Circulating System	High	Medium	Controlled and continuous. Adding filtration ensures clean oil supply	Excellent, can include heat exchanger	High	May accumulate moisture due to condensation	Important
Air-Oil Mist	High	Medium	Positive, automatic delivery of regulat-ed oil quantity, free of contamination	Excellent	High	Sensitive to low temperature	Important

Lubrication Continued

Lubrication Frequency

Lubrication frequency is dependent on application speed, temperature, and level of contamination. Relubrication schedules are only general recommendations. Experience and testing may be required for specific applications. Check individual product sections for more information on specific Regal Power Transmission Solutions product lubrication guidelines.

Solid Lubricants

Oil saturated polymers (OSP) are generally a porous plastic that retains oil and are used in place of grease. This option may be used in inaccessible areas where relubrication is difficult. Oil is released during bearing operation and excess oil is reabsorbed when operation stops. Since the polymer material fills the bearing cavity, it also helps to keep out contaminant. This product is generally limited to slower operating speeds and generally to temperatures below +200°F (+93°C).

Graphite is another form of solid lubrication. A semi-solid graphite mixture is inserted into the bearing and then baked to cure the material. Lubrication comes in the form of a thin layer of solid graphite that is deposited on all friction surfaces. This type of lubrication works well in extreme temperature (high or low), high contamination, or even when the bearing is submerged (lubricant does not have anti-corrosion properties).

Dry Film

Dry film lubricants such as molybdenum disulfide or graphite are well suited for specialized applications such as: high temperature, oscillatory rotation, maintenance free operation, or locations where bearings cannot be reached for easy maintenance. The lubricant is applied as a thin film and is permanently bonded to the bearing surfaces. The interaction of the rolling elements with this solid lubricant works to compact the lubricant into the surface imperfections of the bearing elements and reduces metal-to-metal contact.

Mounting

Mounting the bearing has important effects on performance, durability and reliability. Proper tools, fixtures and techniques are a must for any bearing application, and it is the responsibility of the design engineer to provide for this in his design, advisory notes, mounting instructions and service manuals. Nicks, dents, scores, scratches, corrosion staining and dirt must be avoided if reliability, long life and smooth running are to be expected. This section is provided as a reference only, additional data dealing solely with each type of bearing is found in each respective section.

Fit selections given in the various sections will serve as a guide for the majority of applications where the bearings are subjected to normal or heavy loads and other normal operating conditions. When bearings are subjected to very heavy or vibratory loads it may be necessary to employ shaft and housing fits tighter than standard. The same applies if shafts or housings of soft metal or those not having smoothly ground bearing seats (i.e., the smoothness ordinarily associated with ground or reamed bores) are used. Furthermore, if speeds are abnormally high, it may be necessary to maintain shaft and housing fits other than those shown in tables. Consult Application Engineering for recommendations for these abnormal conditions.

Shaft Fit – Mounted Product

Most mounted bearings are used to provide rotational support by inserting a shaft through them, typically with a slip fit. The shafts tolerance and finish is of utmost importance for proper bearing function and useful life. Ground shaft finishes are normally suggested for most applications; however, in some cases, a ground finish is not practical. In these situations, a machined finish may be acceptable; consult Application Engineering for recommendations. Additional shaft requirements dealing solely with each type of bearing are found in each respective section.

High Load Applications – Mounted Product

Applications where the loading approaches the load listed in the respective mounted product's rating table at 5000 hours life and 150/250 rpm should be reviewed and given special consideration. Modifications to consider include:

- Shaft size should be closely controlled for a line to line to a light press fit.
- Skwezloc® Locking Collar or double lock is the preferred lock system.
- Lubricants with "EP" extreme pressure additives may be required.
- Care in housing selection, load direction, and mounting techniques should be exercised. Refer to respective mounted product's installation instructions.

High Speed Applications – Mounted Product

Applications where the speed is in the range of 80% to 100% of the maximum speed listed in the respective mounted product's rating table should be reviewed and given special consideration. Modifications to consider include:

- Shaft size should be controlled to specifications listed in the installation section.
- Skwezloc Locking Collar or double lock is the preferred lock system.
- High quality lubricants should be used.
- Grease should be added more frequently and in small amounts. Refer to respective mounted product's relubrication schedule.
- Care in mounting techniques should be exercised. Refer to respective mounted product's installation instructions.

Mounting Continued

Shaft Fit – Unmounted Product

The slipping or creeping of a bearing race on a rotating shaft, or in a rotating housing, occurs when the fit is loose. Such slipping or creeping action can result in rapid wear of both the shaft and bearing races when the surfaces are dry and heavily loaded. To help prevent this, the bearing is customarily mounted with a press fit on the rotating race and a push fit on the stationary race with the tightness or looseness dependent upon the service intended. Bearings should be mounted squarely when press fitted, either in housings or on shafts, and installation pressure should be applied to the press fitted member only, or should be evenly distributed over both members. Where shock or vibratory loads are to be encountered, fits should be made tighter than for ordinary service. When heavier shaft fits are encountered, the assembly of a bearing on a shaft is best done by expanding the inner race by heating. Heat should not be applied directly to the bearing, but should be conducted to the bearing by some fluid medium. It is recommended that such heating be accomplished in clean mineral oil or in a temperature-controlled furnace at a temperature of between 200°F and 250°F as overheating will reduce the hardness of the races. Sealed bearings should not be mounted by this method as the grease with which the bearings are prelubricated may be affected.

Housing Fit – Mounted Product

For mounted bearing product (pillow blocks, flange blocks...) proper housing fit is dependent on bearing application variables: amount of shock/vibration, high speed fan applications, and need for low torque self-aligning capabilities. Applications with high shock and vibration require tighter fits between the bearing insert and the housing. Shock and vibration work to loosen the fit over time so it is best to start with tight fits. Fan applications require a loose fit to allow for easy self-aligning capabilities to adjust for variations in mounting surfaces that are typically found in air handling mounting structures.

Housing Fit – Unmounted Product

These types of bearings will be mounted into the customer's housing and therefore is application dependent. In the case of unmounted roller bearings or ER style bearings, housing fit is dependent on whether the outer ring is stationary or rotating. In general, a rotating outer ring requires a tighter fit than if the outer ring is stationary. In applications where bearing housings are made of soft materials (aluminum, magnesium, light sheet metal, etc.) or those which lose their fit because of different thermal expansion, outer race mounting must be approached cautiously. First, determine the possible consequences of race loosening and turning. The type of loading must also be considered to determine its effect on race loosening. The force exerted by the rotating elements on the outer race can initiate a precession which will aggravate the race loosening problem through wear, pounding, and abrasion. Since the pressing force is usually greater than the friction forces in effect between the outer race and housing, no foolproof method can be recommended for securing outer races in housings which deform significantly under load or after appreciable service wear. The surest solution is to press the race into a housing of sufficient stiffness with the heaviest fit consistent with the bearing operating clearances. Often, inserts or liners of cast iron or steel are used to maintain the desired fit and increase useful life of both bearing and housing. When stationary outer rings are required to float (move axially in the housing bore to compensate for expansion), a housing bore surface finish of 65 micro inches Ra maximum is recommended.

Mounting Continued

Housing Fit – Cam Follower

Proper mounting of stud type cam follower and track roller bearings requires a close fit between the bearing stud and the housing hole. The endplate must be backed up by the housing member face. Likewise the face of the housing adjacent to the bearing endplate face should be square to the housing bore.

Endplate support is also critical when mounting yoke-type series cam followers and track rollers. If the endplates are not properly backed up, they can partially or completely work off the inner ring. The preferred mounting method is by use of a separate bushing at one side to permit complete axial clamping of the endplates. If the endplates can not be clamped end-wise, it is essential to have a close fit axially in the yoke in which the bearing is mounted to prevent the bearing endplates displacing axially. Refer to the Camrol engineering section for more detailed information regarding cam follower mounting.

Mounting for Precision and Quiet Running Applications - Radial Cylindrical Roller Bearings

In applications of roller bearings where smoothness of operation is important, special precautions must be taken to eliminate those conditions which serve to initiate radial and axial motions. Accompanying these motions are forces that can excite bearing system excursions in resonance with shaft or housing components over a range of frequencies from well below shaft speed to as much as 100 times above it. The more sensitive the configuration, the greater the need for precision in the bearing and mounting. Among the important elements to be controlled are shaft, race, and housing roundness, squareness of faces, diameters, and shoulders. Though not readily appreciated, grinding chatter, lobular out-of-roundness, waviness and any localized deviation from an average or mean diameter (even as a consequence of flat spots as small as .0005 in.) can cause significant operating roughness. To detect the aforementioned deficiencies and ensure the selection of good components, three-point electronic indicator inspection must be made. For ultra precise or quiet applications, components are often checked on a continuous recording instrument capable of measuring to within a few millionths of an inch. Though this may seem extreme, it has been found that shaft deformities will be reflected through the bearings' inner races. Similarly, tight-fit outer races pick up significant deviations in housings. Special attention is required both in housing design and in assembly of the bearing to shaft and housing. Housing response to axial excursions forced by bearing wobble resulting from out-of-square mounting has been found to be a major source of noise and howl in rotating equipment. Stiffer housings and careful alignment of bearing races make significant improvements in applications where noise or vibrations have been found to be objectionable.

Squareness and Alignment - Radial Cylindrical Roller Bearings

In addition to the limits for roundness, squareness of end faces and shoulders must be closely controlled. Tolerances of .0001 in. full indicator reading per inch of diameter are normally required for shoulders, in addition to appropriately selected limits for fillet eccentricities. The latter must also fall within specified limits for radii tolerances to prevent interference with bearing race fillets, which results in cocking of the race. Reference should be made to the individual bearing dimension tables, which list the corner radius for each bearing. Shoulders must also be of sufficient height to ensure proper support for the races.

Mounting Continued

Rollway Cylindrical Roller and McGill Spherical Roller Bearings – Shaft and Housing Seat Diameters

The tolerances, specified in the following charts for shaft and housing bearing seat fits, may be followed for specific application conditions that are encountered, as indicated. For special applications not covered by the following, Application Engineering should be consulted for additional assistance. The proper shaft and housing seat tolerances are designated by a letter and number. For shafts, a lower case letter is used, and for housings, a capital letter, both indicating the location of the tolerance range in relation to the nominal bearing dimension. The numbers indicate the grade of accuracy.

Housing Seat Fits

Housing Construction	Operating Conditions			Fit Symbol*
Housing not split radially	Housing rotating relative to load direction	Heavy loads on bearing in thin wall housing		P7
		Normal and heavy loads		N7
		Light loads		M7
	The direction of the load indeterminate	Heavy shock loads		
		Heavy and normal loads axial displacement of outer ring not required		K7
Housing split or not split radially		Normal and light loads axial displacement of outer ring desirable		J7
	Housing stationary relative to load direction	Shock loads, temporary complete unloading		
		All loads	Housing not split radially	H7
			Housing split radially	H8
		Heat supplied through the shaft		G7

* For cast iron or steel housing.
For housings of light metal, tolerances are generally selected that give slightly tighter fits than those shown.

Mounting Continued

Shaft Seat Fits

Operating Condition		Spherical Roller Bearings			Cylindrical Roller Bearings		
		Nominal Shaft Dia.		Fit Symbol	Nominal Shaft Dia.		Fit Symbol
		MM	Inch		MM	Inch	
Stationary inner ring relative to load direction, all loads	Inner ring easily displaced	All diameters	All diameters	g6	All diameters	All diameters	g6
	Inner ring not easily displaced	All diameters	All diameters	h6	All diameters	All diameters	h6
Inner ring rotating relative to load direction, or load direction indeterminate	Radial load ≤ .08 BDR*	≤ 40 Over 40 to 100 Over 100 to 200	≤ 1.57 Over 1.57 to 3.94 Over 3.94 to 7.88	j6 k6 m6	≤ 40 Over 40 to 140 Over 140 to 320	≤ 1.57 Over 1.57 to 5.51 Over 5.51 to 12.6	j6 k6 m6
	Radial load > .08 BDR* ≤ .18 BDR*	≤ 40 Over 40 to 65 Over 65 to 100 Over 100 to 140 Over 140 to 280	≤ 1.57 Over 1.57 to 2.56 Over 2.56 to 3.94 Over 3.94 to 5.52 Over 5.52 to 11.10	k5 m5 m6 n6 p6	≤ 40 Over 40 to 100 Over 100 to 140 Over 140 to 320 Over 320 to 500	≤ 1.57 Over 1.57 to 3.94 Over 3.94 to 5.51 Over 5.51 to 12.6 Over 12.6 to 19.7	k5 m5 m6 n6 p6
	Radial load > .18 BDR	≤ 40 Over 40 to 65 Over 65 to 100 Over 100 to 140 Over 140 to 200 Over 200 to 500	≤ 1.57 Over 1.57 to 2.56 Over 2.56 to 3.94 Over 3.94 to 5.52 Over 5.52 to 7.88 Over 7.88 to 19.69	m5 m6 n6 p6 r6 r7	≤ 40 Over 40 to 65 Over 65 to 140 Over 140 to 200 Over 200 to 500 Over 500	≤ 1.57 Over 1.57 to 2.56 Over 2.56 to 5.51 Over 5.51 to 7.87 Over 7.87 to 19.7 Over 19.7	m5 m6 n6 p6 r6 r7

* BDR - Bearing Basic Dynamic Rating

Mounting Continued

Standard Shaft Fits

Dimensions in 0.0001 inches

Bore mm		g6	h6	j5	j6	k5	k6	m5	m6	n6	p6	r6
3	6	-2	0	+1	+2	+2	-	+4	-	-	-	-
		-5	-3	-1	-1	0	-	+2	-	-	-	-
7	10	-2	0	+2	+3	+3	-	+5	-	-	-	-
		-6	-4	-1	-1	0	-	+2	-	-	-	-
11	18	-2	0	+2	+3	+4	-	+6	-	-	-	-
		-7	-4	-1	-1	0	-	+3	-	-	-	-
19	30	-3	0	+2	+4	+4	-	+7	-	-	-	-
		-8	-5	-2	-2	+1	-	+3	-	-	-	-
31	50	-4	0	+2	+4	+5	+7	+8	+10	-	-	-
		-10	-6	-2	-2	+1	+1	+4	+4	-	-	-
51	80	-4	0	+2	+5	+6	+8	+9	+12	+15	-	-
		-11	-7	-3	-3	+1	+1	+4	+4	+8	-	-
81	120	-5	0	+2	+5	+7	+10	+11	+14	+18	+23	-
		-13	-9	-4	-4	+1	+1	+5	+5	+9	+15	-
121	180	-6	0	+3	+6	+8	+11	+13	+16	+20	+27	+35
		-15	-10	-4	-4	+1	+1	+6	+6	+11	+17	+26
181	200	-6	0	+3	+6	+9	-	+15	+18	+24	+31	+42
		-17	-11	-5	-5	+2	-	+7	+7	+12	+20	+30
201	225	-6	0	+3	+6	+9	-	+15	+18	+24	+31	+43
		-17	-11	-5	-5	+2	-	+7	+7	+12	+20	+31
226	250	-6	0	+3	+6	+9	-	+15	+18	+24	+31	+44
		-17	-11	-5	-5	+2	-	+7	+7	+12	+20	+33
251	280	-7	0	+3	+6	+11	-	+17	+20	+26	+35	+50
		-19	-13	-6	-6	+2	-	+8	+8	+13	+22	+37
281	315	-7	0	+3	+6	+11	-	+17	+20	+26	+35	+51
		-19	-13	-6	-6	+2	-	+8	+8	+13	+22	+39
316	355	-7	0	+3	+7	+11	-	+18	+22	+29	+39	+57
		-21	-14	-7	-7	+2	-	+8	+8	+15	+24	+43
356	400	-7	0	+3	+7	+11	-	+18	-	+29	+39	+59
		-21	-14	-8	-7	+2	-	+8	-	+15	+24	+45
401	450	-8	0	+3	+8	+13	-	+20	-	+31	+43	+65
		-24	-16	-8	-8	+2	-	+9	-	+16	+27	+50
451	500	-8	0	+3	+8	+13	-	+20	-	+31	+43	+68
		-24	-16	-8	-8	+2	-	+9	-	+16	+27	+52
501	560	-9	0	+3	+9	+12	-	+22	-	-	+48	+76
		-26	-17	-9	-9	0	-	+10	-	-	+31	+59
561	630	-9	0	+3	+9	+12	-	+22	-	-	+48	+78
		-26	-17	-9	-9	0	-	+10	-	-	+31	+61
631	710	-9	0	+4	+10	+14	-	+26	-	-	+54	+89
		-29	-20	-10	-10	0	-	+12	-	-	+35	+69

Mounting Continued

Standard Shaft Fits

Dimensions in 0.0001 inches

Bore mm		g6	h6	j5	j6	k5	k6	m5	m6	n6	p6	r6
3	6	-2	0	+1	+2	+2	-	+4	-	-	-	-
		-5	-3	-1	-1	0	-	+2	-	-	-	-
7	10	-2	0	+2	+3	+3	-	+5	-	-	-	-
		-6	-4	-1	-1	0	-	+2	-	-	-	-
11	18	-2	0	+2	+3	+4	-	+6	-	-	-	-
		-7	-4	-1	-1	0	-	+3	-	-	-	-
19	30	-3	0	+2	+4	+4	-	+7	-	-	-	-
		-8	-5	-2	-2	+1	-	+3	-	-	-	-
31	50	-4	0	+2	+4	+5	+7	+8	+10	-	-	-
		-10	-6	-2	-2	+1	+1	+4	+4	-	-	-
51	80	-4	0	+2	+5	+6	+8	+9	+12	+15	-	-
		-11	-7	-3	-3	+1	+1	+4	+4	+8	-	-
81	120	-5	0	+2	+5	+7	+10	+11	+14	+18	+23	-
		-13	-9	-4	-4	+1	+1	+5	+5	+9	+15	-
121	180	-6	0	+3	+6	+8	+11	+13	+16	+20	+27	+35
		-15	-10	-4	-4	+1	+1	+6	+6	+11	+17	+26
181	200	-6	0	+3	+6	+9	-	+15	+18	+24	+31	+42
		-17	-11	-5	-5	+2	-	+7	+7	+12	+20	+30
201	225	-6	0	+3	+6	+9	-	+15	+18	+24	+31	+43
		-17	-11	-5	-5	+2	-	+7	+7	+12	+20	+31
226	250	-6	0	+3	+6	+9	-	+15	+18	+24	+31	+44
		-17	-11	-5	-5	+2	-	+7	+7	+12	+20	+33
251	280	-7	0	+3	+6	+11	-	+17	+20	+26	+35	+50
		-19	-13	-6	-6	+2	-	+8	+8	+13	+22	+37
281	315	-7	0	+3	+6	+11	-	+17	+20	+26	+35	+51
		-19	-13	-6	-6	+2	-	+8	+8	+13	+22	+39
316	355	-7	0	+3	+7	+11	-	+18	+22	+29	+39	+57
		-21	-14	-7	-7	+2	-	+8	+8	+15	+24	+43
356	400	-7	0	+3	+7	+11	-	+18	-	+29	+39	+59
		-21	-14	-8	-7	+2	-	+8	-	+15	+24	+45
401	450	-8	0	+3	+8	+13	-	+20	-	+31	+43	+65
		-24	-16	-8	-8	+2	-	+9	-	+16	+27	+50
451	500	-8	0	+3	+8	+13	-	+20	-	+31	+43	+68
		-24	-16	-8	-8	+2	-	+9	-	+16	+27	+52
501	560	-9	0	+3	+9	+12	-	+22	-	-	+48	+76
		-26	-17	-9	-9	0	-	+10	-	-	+31	+59
561	630	-9	0	+3	+9	+12	-	+22	-	-	+48	+78
		-26	-17	-9	-9	0	-	+10	-	-	+31	+61
631	710	-9	0	+4	+10	+14	-	+26	-	-	+54	+89
		-29	-20	-10	-10	0	-	+12	-	-	+35	+69

Mounting Continued

Standard Housing Fits

Dimensions in 0.0001 inches

OD mm		G7	H8	H7	H6	J6	J7	K6	K7	M6	M7	N6	N7	P6	P7
10	18	+2	0	0	0	-2	-3	-4	-5	-6	-7	-8	-9	-10	-11
		+9	+11	+7	+4	+2	+4	+1	+2	-2	0	4	-2	-6	-4
19	30	+3	0	0	0	-2	-4	-4	-6	-7	-8	-9	-11	-12	-14
		+11	+13	+8	+5	+3	+5	+1	+2	-2	0	-4	-3	-7	-6
31	50	+4	0	0	0	-2	-4	-5	-7	-8	-10	-11	-13	-15	-17
		+13	+15	+10	+6	+4	+6	+1	+3	-2	0	-5	-3	-8	-7
51	80	+4	0	0	0	-2	-5	-6	-8	-9	-12	-13	-15	-18	-20
		+16	+18	+12	+7	+5	+7	+2	+4	-2	0	-6	-4	-10	-8
81	120	+5	0	0	0	-2	-5	-7	-10	-11	-14	-15	-18	-20	-23
		+19	+21	+14	+9	+6	+9	+2	+4	-2	0	-6	-4	-12	-9
121	150	+6	0	0	0	-3	-6	-8	-11	-13	-16	-18	-20	-24	-27
		+21	+25	+16	+10	+7	+10	+2	+5	-3	0	-8	-5	-14	-11
151	180	+6	0	0	0	-3	-6	-8	-11	-13	-16	-18	-20	-24	-27
		+21	+25	+16	+10	+7	+10	+2	+5	-3	0	-8	-5	-14	-11
181	250	+6	0	0	0	-3	-6	-9	-13	-15	-18	-20	-24	-28	-31
		+24	+28	+18	+11	+9	+12	+2	+5	-3	0	-9	-6	-16	-13
251	315	+7	0	0	0	-3	-6	-11	-14	-16	-20	-22	-26	-31	-35
		+27	+32	+20	+13	+10	+14	+2	+6	-4	0	-10	-6	-19	-14
316	400	+7	0	0	0	-3	-7	-11	-16	-18	-22	-24	-29	-34	-39
		+30	+35	+22	+14	+11	+15	+3	+7	-4	0	-10	-6	-20	-16
401	500	+8	0	0	0	-3	-8	-13	-18	-20	-25	-26	-31	-37	-43
		+33	+38	+25	+16	+13	+17	+3	+7	-4	0	-11	-7	-22	-18
501	630	+9	0	0	0	-3	-9	-17	-28	-28	-38	-35	-45	-48	-58
		+36	+43	+28	+17	+15	+19	0	0	-10	-10	-17	-17	-31	-31
631	800	+9	0	0	0	-4	-9	-20	-31	-31	-43	-39	-51	-54	-66
		+41	+49	+31	+20	+16	+22	0	0	-12	-12	-20	-20	-35	-35
801	1000	+10	0	0	0	-4	-10	-22	-35	-35	-49	-44	-57	-61	-75
		+46	+55	+35	+22	+18	+25	0	0	-13	-13	-22	-22	-39	-39

Internal Clearance

Radial and Axial Internal Clearance

Anti-friction bearings are manufactured with specific radial clearances between the raceways and rolling elements. The clearances are designed for normal operating temperatures and application conditions. Certain bearing products, such as spherical roller bearings, are available with industry standard radial clearance ranges. Other bearing products will incorporate radial clearance as determined by the manufacturer. For high temperature and high speed applications, increased radial clearance options may be available to allow for thermal expansion. For mounted bearings exposed to high shock load and vibration, reduced internal clearance may be an option to distribute load over more rolling elements and reduce the stress per rolling element. Oscillatory applications may also benefit from reduced internal clearance. Load is carried over more rolling elements thus putting less stress on bearing raceways and potentially reducing wear.

Axial clearance between rolling elements and raceways also allows an inherent axial movement within the bearing, this is known as end play. End play, is the maximum relative displacement of the bearing rings relative to one another, in a direction parallel to the axis of rotation. The amount of endplay in a given bearing product is based on the design experience of the manufacturer and partly controlled by manufacturing tolerances.

Bearing Stiffness

Bearing stiffness is the relationship between bearing load and bearing deflection due to that load. Bearing stiffness is dependent on several variables: rolling element type, contact angle, applied load, and bearing preload.

Rolling element type comes into play due to the different contact patterns that the rolling elements make with the raceways. Therefore roller bearings, with their large line contact, will be stiffer than the point type contact produced by ball bearings. Additionally, the greater the number of rolling elements within the bearing the stiffer it will be.

Contact angle affects whether a bearing has better radial or axial stiffness. A small contact angle will produce a bearing with higher radial stiffness while a large contact angle will create higher axial stiffness.

Preload increases stiffness by removing internal clearance which in turn puts more rolling elements in contact with the raceway. As a negative affect, preload can increase operational temperatures and internal friction which can lead to reduced bearing life.

For specific information concerning stiffness data related to Regal Power Transmission Solutions bearings, please contact Application Engineering.

Bearing Materials

A portion of bearing life and reliability of a rolling element bearing is based upon the material that the bearing components are made from. L10 bearing life equations are based upon the fatigue limit of the metal surfaces, both raceways and rolling elements. Therefore the proper and highest quality materials must be used.

Through-hardened Steels

52100 is the most common type of through-hardened steel used for bearing components as it is widely recognized as a superior bearing steel. It is resistant to shock loading and carries high metal fatigue life ratings. In addition, Regal Power Transmission Solutions specifies all steel to be vacuum degassed (VDG). This is an extra manufacturing operation to filter impurities and remove inclusions that often appear during steelmaking. The result is a cleaner and more pure material that is better able to withstand subsurface cracking and subsequent premature metal fatigue failures.

Some bearing product produced using 52100 utilizes a zone hardening process in which only the raceway and immediate area is hardened. This creates a hardened surface for rolling elements but ductile in other areas for improved durability and shock load resistance.

Case-hardened Steels

Case hardening is used for certain applications when a through hardened part is undesirable. The surface can be hardened to an acceptable level yet the core of the part remains soft to resistant vibration and impact loads.

8620, 4118 and 9310 are examples of case hardening steel used by Regal Power Transmission Solutions for bearing components. These low carbon alloy steels have good hardenability characteristics and toughness when properly carburized and hardened.

Corrosion Resistant Steels

A variety of corrosion resistant steels are used across the Regal Power Transmission Solutions bearing line. The type of steel used depends on the component, cost effectiveness, and level of corrosion resistance needed.

The most common steel used for corrosion resistant bearing products is 400 series stainless steel. Its corrosion resistance is less than austenitic grades but it can be heat treated to obtain acceptable hardness value needed for anti-friction bearings.

300 series stainless steel is the most common type of stainless steel used for consumer products. It has excellent corrosion resistance when compared to 440C or coatings. However it cannot be hardened to acceptable levels for use in bearings. Therefore it can only be used in certain areas of bearing design that do not see a direct load from rolling elements. This includes components such as housings, seal stampings, setscrews, grease fittings, etc.

Standard bearing steels can also be coated or plated with various substances to provide good corrosion resistance as well as good harness values.

Bearing Materials

High Temperature Steels

As temperature rises, bearing rating is reduced, depending upon the bearing material and the operating temperature. Various types of tool steel, stainless steel and some of the more exotic materials are being used in order to meet the need for bearings to operate at elevated temperatures.

Bearing applications involving elevated temperatures preclude the use of standard bearing materials if full capacity is to be realized. In general, the temperature range is divided as follows:

- 250°F to 400° F
- 400°F to 800°F
- Over 800°F

Applications in range (a) can be generally handled by standard alloy steels , such as SAE 52100 or carburized SAE 8620 , suitably hardened and stabilized for the range of operating temperature . Little or no reduction in basic capacity should be expected. For range (b), high alloy tool steels (M-50) may be used. For range (c), materials such as ceramics are generally required. Design options in this range are generally limited.

Composites – Bushings

Replacing rollers, a non-metallic bushing provides load support and a sliding motion that eliminates or reduces need for bearing lubrication. Recommended for use where relubrication is not convenient or where the possibility of grease contamination of the product being processed is not acceptable. Application limitations are lighter loads and lower speeds when compared to a rolling element bearing.

McGill bushing type CAMROL® bearings have a maximum allowable continuous operating temperature of 200°F (120°). The bushings are intended to be used in the self-lubricated mode. However, continuous feed oil lubrication can be used to provide reduced wear rates. Grease lubrication should not be used.

Housing Material

A variety of housing materials are offered within the Regal Power Transmission Solutions mounted bearing product line. Selection of proper materials is application dependent and based upon variables such as type of loading, cost, and environmental conditions.

Gray iron, or cast iron, is the most common housing material type and has adequate strength for most applications. However, certain application conditions must be considered. Cast iron can be a brittle material when higher tensile (pulling) forces are applied; therefore it is not recommended in applications where shock loads are present.

Ductile iron or cast steel is preferred in applications with heavy loads, shock, and vibration since these materials have higher tensile strength and ductility. The chart below shows a comparison of housing materials and their tensile strengths. There is a slightly higher cost associated with ductile iron and cast steel housings and availability may be limited depending on product line.

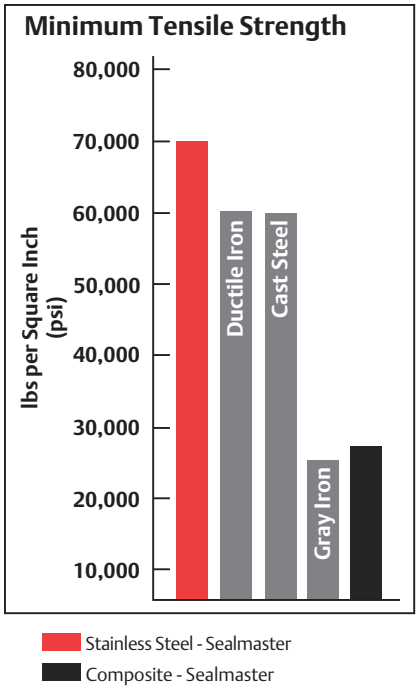

In applications where there is significant humidity, moisture or chemicals present there is a likelihood that corrosion may occur over time. A coating or alternative material maybe required to meet material performance or customer aesthetic requirements. For each product line, Regal Power Transmission Solutions can offer an alternate coating or material to improve corrosion resistance. Refer to each product section or the Corrosion Resistant Engineered Solutions (CRES) section K for more details on available options.

Seal Selection

The purpose of seals on a bearing is to help keep contamination from entering the bearing and to help retain lubricant inside the bearing cavity. Proper seal selection is dependent on a number of application variables: operational speed, level of contamination, type of contamination, operational temperature, and type of lubricant used.

Seal Type

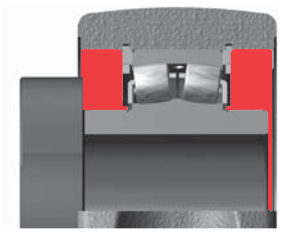

Non-contacting/ Labyrinth Seals

Recommended for use in dry, low contamination environments. Constructed from multiple metal stampings, typically with one element that rotates with the shaft, creating a centrifugal force to help keep out contamination. Excess grease purges from the seal to help remove contaminates caught in the lubricant and prevent seal damage from over lubrication. These types of non-contact seals save energy by reducing drag and normally cannot be blown by over greasing.

Contacting Seals

Contacting seals can be used in a variety of applications depending on type of seal and material used. These factors affect the type and severity of contamination that the seal can withstand.

Felt Seal

The design incorporates a series of passageways with a highly effective filtering media that together block the ingress of contaminants and allow for the purging of oxidized grease during re-lubrication. Protective metal flingers are primary factors in seal performance. The inner flinger is pressed into the outer race and is a stationary foundation for the sealing system. The outer flinger, the first barrier to contaminant entry, is attached to the inner race and therefore rotates with the shaft. The rotation of the outer flinger offers two significant benefits. The first is the creation of a centrifugal force that repels debris by “slinging” it away from the seal area. The second is an extension of the flinger internally into the bearing chamber that initiates a vortex that churns the lubricant back toward the ball path. The design operates with less drag and less heat generation than rubber contact seals.

Recommend for use in dry applications with light to moderate contamination. Standard felt seals can operate in temperatures up to 200°F (93°C). Nomex felt can be used for temperatures 200°F to 400°F (93°C to 204°C).

Rubber Lip

Positive contact molded rubber lip seal with or without an auxiliary flinger. This type of seal functions well in wet and dirty environments up to 250°F (120°C). High temperature versions are available for conditions up to 450°F (232°C). Multiple lip seals are also available for severe applications. Rubber lip seals come in a variety of materials: Buna N Nitrile, FKM, and silicone.

Seal Selection Continued

Spring Loaded

This V-shaped rubber seal is molded into a metal stamping. A spring is retained in the body of the "V" to maintain constant pressure against the inner race over the life of the seal. Seal lip can be oriented inward for increased lubricant retention. For better exclusion of contaminates the lip is oriented outward. High temperature versions available.

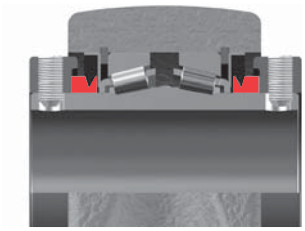

V-Ring

The rubber contact face seal is designed to retain lubricant and help exclude contaminants. The seal is designed with a long flexible face that seals axially against the counterface. The contact seal is self purging. It retains low torque characteristics and rotates with the shaft to help reduce contaminate build-up on the seal. Its low friction reduces heat generation and wear.

Bearing Retainers

The function of a bearing retainer (cage) is to separate the rolling elements at evenly space intervals and reduce internal friction which allows for increased speeds. In roller bearing product the retainer also provides stability to the rolling elements, keeping them from skewing as they rotate. Retainers are sometimes omitted and a full complement of rolling elements is used instead. Additional rolling elements help to add rigidity and increase static capacity.

In some cases use of retainers can also help in aiding longer bearing life. A retained bearing has a larger grease reservoir than a similar bearing that is a full complement.

Mounted Ball

Land Riding

A land riding is design used in Sealmaster mounted ball product. This design minimizes friction and provides maximum grease circulation. Retainer is designed to "float" on the ground extension (or lands) of the outer ring while spacing the balls precisely for more even load distribution. This minimizes wear on both balls and retainer, while maximizing stability, especially important in applications involving vibration, shock loading or high operating speeds. For applications involving high temperatures, +220°F, land riding brass retainers are available.

Ball Riding

Ball riding retainers are designed to retain the balls within the cage pockets, which improves manufacturability, but can wipe oil away from the rolling elements removing it from these critical components. Sealmaster Material Handling Bearings and Browning Mounted Ball Bearing utilize a one piece ball riding nylon retainer molded from nylon 6/6. Nylon retainers a low cost alternative to brass retainers that have many good characteristics: low friction, natural lubricity, and resistant to many chemicals. Nylon retainers are capable of continues use up to 250°F, but many other components in the bearing may prevent. Some manufactures utilize a steel riveted ball riding retainer.

Mounted Roller

Stamped Steel

A one-piece, low carbon steel stamping. This type of retainer provides roller guidance as well as retaining rolling elements with the inner ring.

Bearing Retainers Continued

Unmounted Roller – McGill

Stamped Steel Retainer – SPHERE-ROL

One-piece, low carbon steel stamping. Land riding design only provides roller spacing and helps provide greater speed capability.

Stamped Steel Retainer – CAGEROL

One-piece, low carbon steel stamping. Retains and spaces the rollers. Provides roller guidance to prevent skewing. Allows for an increased lubricant reservoir. Minimizes radial play of rollers to ease assembly. Helps provide higher speed capability.

Stamped Steel Retainer – Metric CAMROL

One-piece, low carbon steel stamping. Retainers are heat treated to allow for roller guidance. The retainers are designed with two rollers per pocket (except 13, 16, and 19mm OD's) to help maximize static and dynamic load ratings, yet still offer the advantages of a caged construction.

Note: Inch CAMROL is a full complement bearing design that does not utilize a retainer.

Unmounted Roller - Rollway

Stamped Steel Retainer

A one-piece, low carbon steel stamping. Supplied on some bearings with snap ring retention. (TRU-ROL numbering suffix of "B") Recommended for low speed operations.

Bearing Retainers Continued

Segmented Steel Retainer

A built-up type of retainer utilizing low carbon steel segments rigidly held between stamped, low carbon steel end plates. This is the standard retainer supplied with commercial bearings identified with the TRU-ROL numbering system. Recommended for moderate speed applications.

Two-Piece Retainer

This type of retainer is fabricated from brass. This is the standard retainer supplied with Rollway bearings identified with the MAX numbering system, ISO numbering system, TRU-ROL numbering system when the “MR” suffix is used, and any bearing with bore size over 180mm. Recommended for moderate to high speed applications.

One-Piece Retainer

This land piloting retainer is fabricated from brass or steel with radial retention of the rollers provided by closing the roller “pocket” with small projections formed by mechanically upsetting the retainer material. This retainer design is typically made to order for high speed applications, though it is applicable for other applications.

Cylindrical Thrust - Machined Brass

Thrust bearing retainers are machined from centrifugally cast brass. The retainers for all cylindrical roller thrust bearings are designed to be roller riding. The contoured roller pockets are accurately machined at right angles to the thrust force, which will be applied to the bearing. The rollers are retained in the assembly by a steel ring pinned to the outside diameter of the retainer.

Tapered Thrust – Machined Brass

Taper thrust bearing retainers are machined from a single piece of centrifugally cast brass. The retainer is designed to pilot on the thrust plates’ flanges. The roller pockets are accurately machined at right angles to the thrust force which will be applied to the bearing. The T-Flat retainers are “pin through” style (pins extend through the center of the roller). The retainer consists of two steel rings through which the hardened steel pins are secured. An alternate design is a retainer machined from a single piece of centrifugally cast brass with the rollers retained by two pins.

Bearing Storage

Cleanliness and accuracy are stressed in all phases of bearing manufacture to help provide a clean and precise mechanical instrument. It is therefore essential the same care be taken in subsequent shipping, storage, and handling, as well as in mounting to make sure of the ultimate in bearing performance.

After completion, each bearing is thoroughly cleaned, preserved and packaged in a shipping carton with proper identification.

Lint-free commercial packing such as polystyrene foam packaging materials, crumpled newspaper or batting material may be used to cushion cartons of bearings in shipping containers. Materials having fine particulate, such as saw dust, are not recommended as such material may contaminate the bearings. The wrappings should never be removed from bearings until they are ready to be mounted. For those bearings preserved with a protective neutral compound, it is generally unnecessary to remove this coating as it will normally mix with any type lubricant.

When necessary to keep bearings in storage, they should be placed in a dry, cool location, and provision should be made to utilize the old stock before using new stock. Avoid dropping or other large impacts to the bearing as these forces will create damage to the bearing components and result in less than ideal bearing life.

ABMA and ISO

ABMA

These letters refer to American Bearing Manufacturers' Association - an organization comprised of the leading bearing and bearing-related manufacturers in the United States. The main purpose of the ABMA is to bring about standardization within the industry and to pass these benefits on to the bearing users.

ISO

ISO is the name for the International Organization for Standards. ISO is a worldwide federation of national standards bodies. The mission of ISO is to promote the development of standardization and related activities in the world. ISO's work results in international agreements which are published as International Standards.


McGILL
CF 2

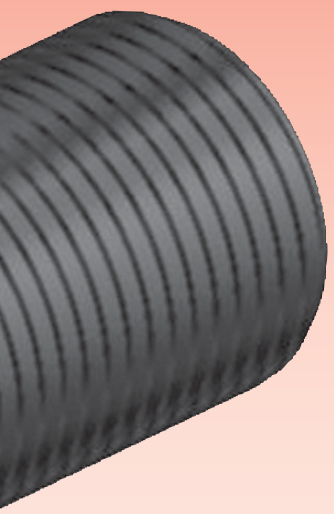

Cam Followers

Unmounted bearing assembly consisting of hardened precision ground inner and outer raceways with either full complement or separated (cage) needle, ball, tapered or cylindrical rolling elements constructed with an integral stud or precision ground bore. Cam follower bearings provide an antifriction solution for translating rotation to linear motion or supporting either pure radial or combination thrust loads depending on the rolling elements types.

Bearing Configurations

Cylindrical, Crowned, V-Groove Or Flanged

Mounting Styles

Eccentric Or Concentric Stud Or Yoke

Outer Roller Diameter Range

1/2” To 10” And 13 mm To 90 mm

Materials

Bearing Quality Steel, Stainless

Cam Follower Selection Guide

		Product Series	Material / Finish	Size Range: Inch	Size Range: Metric
CAMROL		CF	Black Oxide Finish Bearing Steel	1/2 - 10	
		CYR		3/4 - 10	
		CFH		1/2 - 7	
		BCF		1/2 - 4	
		BCYR		3/4 - 4	
		MCF			16 - 90
		MCFR			13 - 90
		MCYR			5 - 50
		MCYRR			5 - 50
Heavy-Duty		CFD	Black Oxide Finish Bearing Steel	1 1/4 - 6	
		CYRD		1 1/4 - 6	
		MCFD			35 - 80
		MCYRD			15 - 50

* For estimating purpose only, individually sizes may vary and are subject to change without notification

McGill CAMROL Cam Followers are available in 400 series stainless steel components for improved resistance to both external and internal corrosion.

CRES CAMROL bearings are dimensionally interchangeable with standard CAMROL® bearings and easily identifiable with “CR” designation.

Design Characteristics					Features							
Radial Load	Thrust Load	Precision	High Speed	Relative Base Cost *	Crowned OD	Eccentric Stud	Lubrication Holes	Seal	Hex Hole	Slotted Face	Jam Nuts	Page No.
●◒	○	●◒	◒	$	O	O	S	O	O	S	-	B-15
●	○	●◒	◒	$	O	-	S	O	-	-	-	B-39
●	○	●◒	◒	$$	O	-	S	O	O	S	-	B-15
◒	○	●◒	◒	$	O	O	S	O	O	S	-	B-45
◒	○	●◒	◒	$	O	-	S	O	-	-	-	B-57
●◒	○	●◒	◒	$	S	O	S	O	O	S	S	B-69
◒	○	●◒	●◒	$	S	O	S	O	O	S	S	B-69
●	○	●◒	◒	$	S	-	S	O	O	-	S	B-91
●◒	○	●◒	●◒	$	S	-	S	O	-	-	S	B-91
●◒	◒	●◒	●◒	$$	O	O	O	S	S	-	-	B-103
●	◒	●◒	◒	$$	O	-	O	S	-	-	-	B-107
●	◒	●◒	◒	$$	S	O	S	-	O	S	S	B-111
●	◒	●◒	◒	$$	S	-	S	-	-	-	-	B-115

Circular Track / Misalignment
Load Sharing / Adjustment To Track
Relubrication To Help Promote Bearing Operating Life
Contamination Barrier
Blind Hole Mounting
Allows The Use Of A Lube Fitting When Lubrication From The Flange Side Of Bearing
Accessories Included

O = Optional
S = Standard
○ = Not Recommended

○ ◒ ◒ ● ●

Poor ←→ Best

Cam Follower Selection Guide

		Product Series	Material / Finish	Size Range: Inch	Size Range: Metric
Special Duty		SDCF	Black Oxide Finish Bearing Steel	1 - 4	
		SDMCF			25 - 100
TRAKROL		PCF	Black Oxide Finish Bearing Steel	1 1/2 - 9	
		PCYR		3 - 6	
		FCF		1 1/2 - 9	
		FCYR		3 - 6	
		VCF		2 1/2 - 8 1/2	
		VCYR		3 1/2 - 7 1/2	

McGill CAMROL Cam Followers are available in 400 series stainless steel components for improved resistance to both external and internal corrosion.

CRES CAMROL bearings are dimensionally interchangeable with standard CAMROL® bearings and easily identifiable with “CR” designation.

Design Characteristics					Features							
Radial Load	Thrust Load	Precision	High Speed	Relative Base Cost *	Crowned OD	Eccentric Stud	Lubrication Hole	Seal	Hex Hole	Slotted Face	Jam Nuts	Page No.
◒	○	●	◒	$$$	O	O	-	S	S	-	S	B-123
◒	○	●	◒	$$$	O	O	-	S	S	-	S	B-125
◒	◒	◒	◒	$$	O	O	-	S	-	-	O	B-131
◒	◒	◒	◒	$$	O	-	-	S	S	-	-	B-133
◒	◒	◒	◒	$$$	-	O	-	S	S	-	O	B-135
◒	◒	◒	◒	$$	-	-	-	S	-	-	-	B-137
◒	◒	◒	◒	$$	-	O	-	S	S	-	O	B-139
◒	◒	◒	◒	$$	-	-	-	S	-	-	-	B-141

Circular Track / Misalignment
Load Sharing / Adjustment To Track
Relubrication And Promote Bearing Life
Contamination Barrier
Blind Hole Mounting
Allows The Use Of A Lube Fitting When Lubrication From The Flange Side Of Bearing
Accessories Included

O = Optional
S = Standard
○ = Not Recommended

○ ◒ ◒ ◒ ●

Poor ←——→ Best

* For estimating purpose only, individual costs may vary and are subject to change without notification

McGill Inch Cam Followers

McGill CAMROL bearings are full complement needle bearings feature black oxide treated bearing steel, available in two basic mounting styles for use in mechanical automation or linear motion applications. Our basic features each contribute to improved performance, while the LUBRI-DISC® seal option helps prevent metal to metal contact within the bearing while providing a barrier for contaminant entry and allow venting of excess or old grease during relubrication. In addition to the seal option these bearings are available with several dimensional choices and combinations to provide a specific solution for the application. Within the following section you can learn more about these features and how they can be applied to your application.

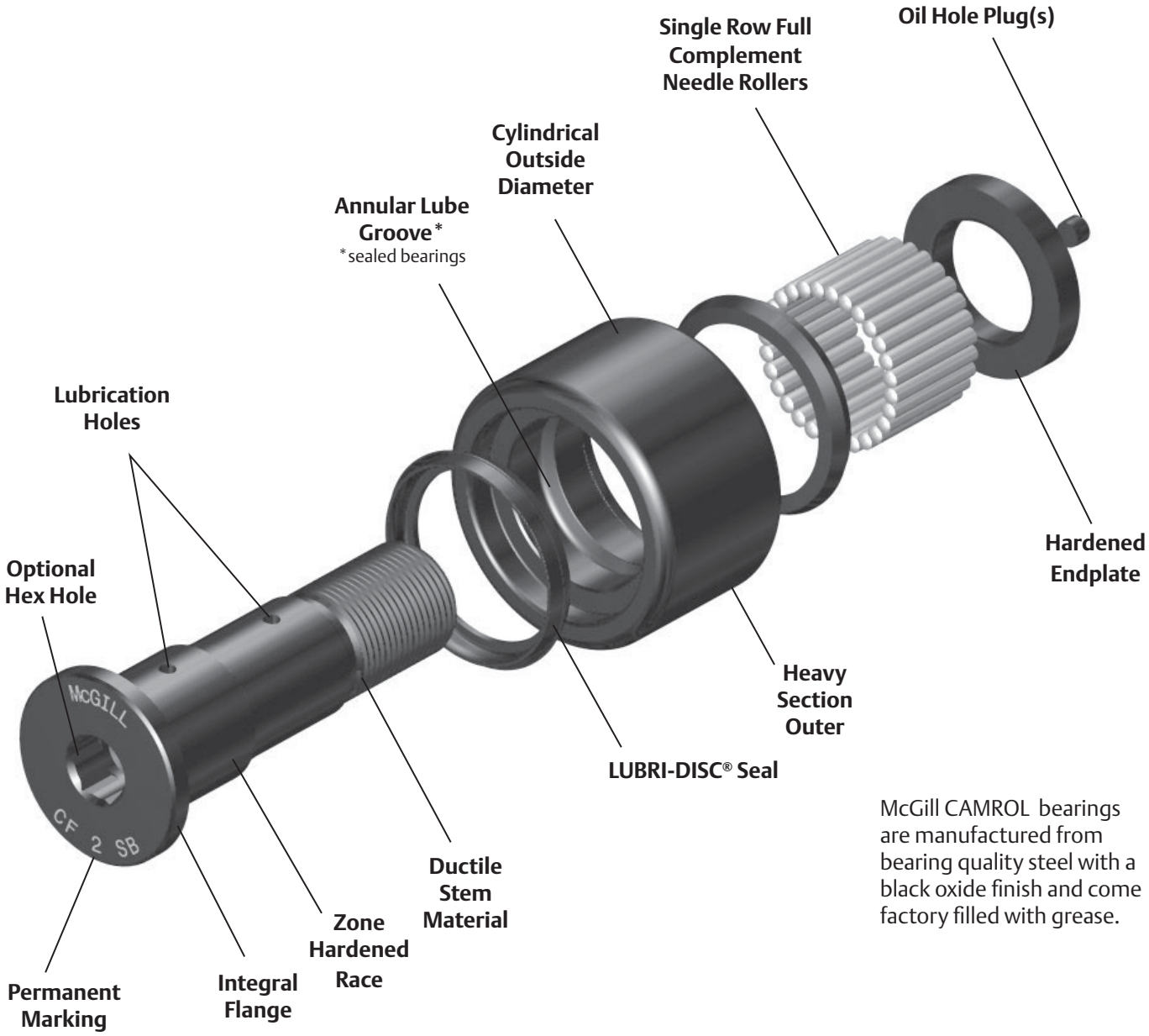

McGill CAMROL bearings are manufactured from bearing quality steel with a black oxide finish and come factory filled with grease.

Cam Follower Inch Nomenclature

Optional Prefix
- B - Bushing (No Rolling Elements)
- C - Crowned O.D.

Basic Type, Construction
- CF - Cam Follower
- CYR - Cam Yoke Roller
- CFH - Heavy Stud Cam Follower

Construction Suffix
- E - Eccentric Bushing (Std Stud Only)

Size
- Inch Series: O.D. In Inches

Optional Suffix
- N - Narrow Roller Width (1/2 & 5/8 Sizes Only)
- S - LUBRI-DISC® Seal
- B - Hex Hole
- CR - Corrosion Resistant (400 Series CRES)

C CF E - 1 1/2 - SB

Features and Benefits

Single Row Full Complement Needle Rollers

The needle roller diameter, length, and number have been optimized to provide a high dynamic and static load rating, contained within industry standard bearing envelope dimensions.

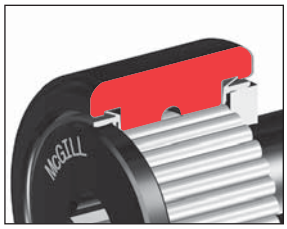

Heavy Section Outer

The heavy section outer helps support radial loading and provide proper rolling element support.

Cylindrical Outside Diameter (OD)

The cylindrical OD can improve performance in certain applications such as improved track capacity by maximizing the contact area with the track.

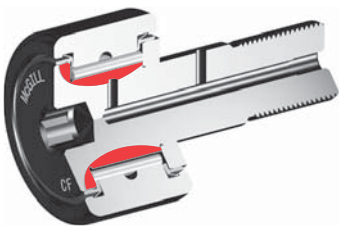

Zone Hardened Raceways

Heat treatment used to precisely harden working surfaces of the raceway and flange. The hardened surfaces provide support for the rolling element contact stresses, while keeping the core of the inner ductile to help absorb shock loads.

Features and Benefits continued

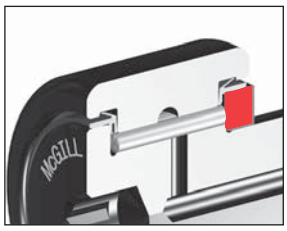

Hardened Endplate

Similar to the flange, the endplate must provide a seal surface for the LUBRI-DISC seal and resist wear from incidental contact with the outer or rollers. The hardened and ground endplate provides a sealing surface with LUBRI-DISC® seal option.

Factory Grease Fill

The cam follower and cam yoke roller bearings are factory lubricated with a medium temperature grease. Contact Application Engineering when application conditions require special lubricants.

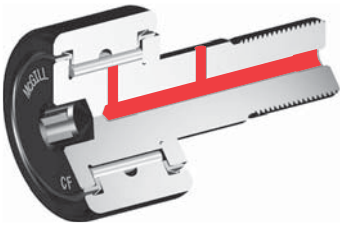

Lubrication Holes

Depending on mounting option, McGill stud type CAMROL bearings may include a lubrication hole to accept a standard drive fitting or an included oil hole plug. The oil hole plug is recommended for closing unused holes to help protect against bearing contamination or lubrication loss.

Yoke Roller Lubrication Hole with Annular groove

McGill CAMROL Yoke roller bearings include a lubrication hole to provide a passage for lubrication to the rolling elements from the yoke roller bore. The customer supplied shaft must provide axial lubrication path to supply bearing. An annular groove in the inner ring bore helps direct lubricant to the hole, making alignment of the shaft and the inner ring holes less critical.

Oil Hole Plug (s)

All McGill stud type Cam followers include 1-2 (depending on # of holes) oil hole plugs to help provide proper lubrication path to the rolling elements and prevent contamination from entering the bearing through an unused oil hole.

Options

Black Oxide Finish

Bearings have a black oxide finish on all external surfaces.

LUBRI-DISC® Seal

The CAMROL standard for seals, the LUBRI-DISC seal helps keep contaminants out and lubrication in the bearing, with an integral back plate to separate the metal to metal contact between the outer ring and endplate(s) or flange. The back plate feature reduces friction resulting in lower operating temperatures which can extend grease life and allowing for higher operating speeds. The seal also includes vents to help prevent seal blowout during relubrication, while the outer raceway is machined with a reservoir for additional lubricant capacity. The LUBRI-DISC seal option has a good balance of sealing, lubricant capacity, and low drag operation essential to a precision cam follower suited for most industrial applications.

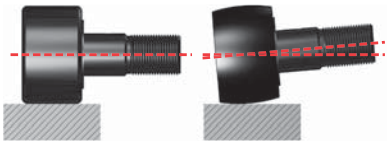

Crowned Outside Diameter (OD)

A crown on the OD of a cam follower bearing can increase bearing life versus a standard cylindrical cam follower. The crown achieves this performance by helping to distribute the stress on the outer ring and rolling elements resulting from misalignment due to mounting inaccuracy or stud deflection. The crown also helps reduce outer skidding in turntable or rotary applications. Not all applications may see the benefit of a crowned OD, consult Application Engineering for guidance for your application.

Heavy Stud Diameter

The increase stem diameter of heavy stud cam followers increases static load capacity of the bearing due to the larger stud diameter. The increase in diameter reduces the amount of deflection that can occur when cam followers are radial loaded. The resultant increase allows a maximum recommended loading of 50% BDR.

*On Heavy-Stud Type Bearings, CFH inch series only

Options continued

Hex Hole (Broached)

The hex hole can aide in the installation and removal of stud type cam followers by increasing the holding power over a standard screw driver slot. The hex feature is identified with a “B” since it is produced using a broach process. Bearing relubrication from flange end must be considered for sizes under 3”.

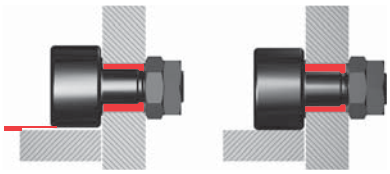

Eccentric Stud

Eccentric stud option provides a means of adjusting the radial position of the bearing which can improve the load sharing of inline bearing combinations. Cam follower load sharing helps reduce operation costs by reducing premature failures due to overloaded bearings, the need of precise mounting hole location tolerances and providing ability to realign bearing due to track wear. Eccentric bushing is press fit on stud and unhardened to permit dowel or setscrew for permanent locking.

Bushing Type

Non-Metallic bushing provides load support with a sliding motion that reduces the need for bearing lubrication for non-food applications where relubrication is not convenient or grease contamination in the process is not acceptable. Max allowable continuous operating temperature up to 200°F. Bushing CAMROL bearings are intended to be used in the self lubricated mode. However, continuous feed oil lubrication can be used to provide reduced wear rates. Grease lubrication should not be used.

Corrosion Resistance

McGill CAMROL Cam Followers are available in 400 series corrosion resistant components for improved resistance to both external and internal corrosion. CRES CAMROL bearings are dimensionally interchangeable with standard CAMROL® bearings and easily identifiable with "CR" designation. Please see page K-3 for more information and availability.

Additional Options

BHT

Hex hole at threaded end of cam follower stud.

THT

Threaded axial lubrication hole at threaded end of cam follower stud.

THF

Threaded axial lubrication hole at flanged end of cam follower stud. Available with all screw driver slot cam followers or broached cam followers over 3”.

THB

Threaded axial oil hole on both ends of cam follower stud. Available with all screw driver slot cam followers or broached cam followers over 3”.

ALG

Annular lubrication groove at cam follower stud radial lubrication hole.

Custom Capabilities

- *Customer specified factory grease fill*
- *Grease fitting installed*
- *Stud or thread length modifications*
- *Roller diameter variations or tolerances*
- *Cam followers grouped or matched diameter tolerance / run out sets*
- *Custom engineered to order designs*

McGILL® Inch Cam Follower Bearings

Basic Construction Type: Stud Type Crowned / Cylindrical Outside Diameter

Rolling Elements: Full Complement Needle Roller

Bearing Material: Bearing Quality Steel

Seal Type: LUBRI-DISC®

Lubrication: Lithium Soap Grease NLGI #2

System Configuration: Concentric / Eccentric / Heavy Stud

Mounting Feature: Slot / Hex Hole

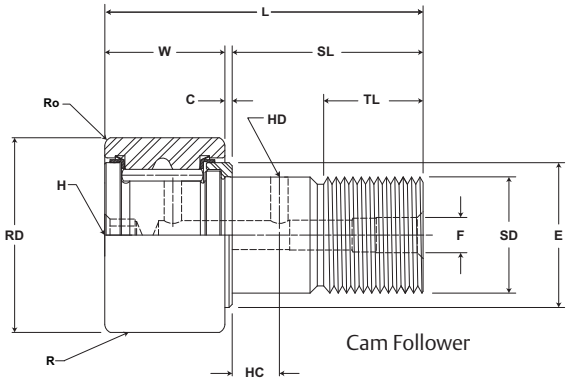

Cam Follower

CF, CFE, CFH

Part No. W/O Seals	Part No. With LUBRI-DISC Seals	RD Roller Diameter inch mm Nom.	RD Roller Diameter inch mm Tol.	W Roller Width inch mm Nom.	W Roller Width inch mm Tol.	SD Stud Diameter inch mm Nom.	SD Stud Diameter inch mm Tol.	SL Stud Length inch mm (Ref)	C Endplate Extension inch mm (Ref)	TL Min Thread Length inch mm (Ref)	L Length Overall inch mm (Ref)	R Crown Prefix CCF-XX inch mm Radius (Ref)	ECC Eccentric Base Modifier CFE-XX inch mm (Ref)	G Eccentric Base Modifier CFE-XX inch mm +0/-.010	BD Eccentric Base Modifier CFE-XX inch mm ±.001	Track Roller Dynamic Rating lb/N	Track Roller Static Rating lb/N
CF 1/2	CF 1/2 S	.500	+0/-.001	.375	+0 / -.005	.190	+.001/-0	.63	.031	.25	1.03	Cylindrical	N/A	N/A	N/A	680	790
CF 1/2 B	CF 1/2 SB	12.70	+0/-.03	9.53	+0 / -.13	4.83	+.03/-0	15.9	.8	6.4	26.2	7				3,025	3,514
CCF 1/2	CCF 1/2 S											178					
CCF 1/2 B	CCF 1/2 SB																
CFE 1/2	CFE 1/2 S	.500	+0/-.001	.375	+0 / -.005	.190	+.001/-0	.63	.031	.25	1.03	Cylindrical	.010	.375	.250	680	790
CFE 1/2 B	CFE 1/2 SB	12.70	+0/-.03	9.53	+0 / -.13	4.83	+.03/-0	15.9	.8	6.4	26.2	7	.25	9.53	6.35	3,025	3,514
CCFE 1/2	CCFE 1/2 S											178					
CCFE 1/2 B	CCFE 1/2 SB																
CFH 1/2	CFH 1/2 S	.500	+0/-.001	.375	+0 / -.005	.190	+.001/-0	.63	.031	.25	1.03	Cylindrical	N/A	N/A	N/A	680	1,580
CFH 1/2 B	CFH 1/2 SB	12.70	+0/-.03	9.53	+0 / -.13	4.83	+.03/-0	15.9	.8	6.4	26.2	7				3,025	7,028
CCFH 1/2	CCFH 1/2 S											178					
CCFH 1/2 B	CCFH 1/2 SB																
CF 1/2 N	CF 1/2 N S	.500	+0/-.001	.344	+0 / -.005	.190	+.001/-0	.50	.031	.25	.88	Cylindrical	N/A	N/A	N/A	620	720
CF 1/2 N B	CF 1/2 N SB	12.70	+0/-.03	8.74	+0 / -.13	4.83	+.03/-0	12.7	.8	6.4	22.2	6				2,758	3,203
CCF 1/2 N	CCF 1/2 N S											152					
CCF 1/2 N B	CCF 1/2 N SB																
CFE 1/2 N	CFE 1/2 N S	.500	+0/-.001	.344	+0 / -.005	.190	+.001/-0	.50	.031	.25	.88	Cylindrical	.010	.250	.250	620	720
CFE 1/2 N B	CFE 1/2 N SB	12.70	+0/-.03	8.74	+0 / -.13	4.83	+.03/-0	12.7	.8	6.4	22.2	6	.25	6.35	6.35	2,758	3,203
CCFE 1/2 N	CCFE 1/2 N S											152					
CCFE 1/2 N B	CCFE 1/2 N SB																
CF 9/16	CF 9/16 S	.5625	+0/-.001	.375	+0 / -.005	.190	+.001/-0	.63	.031	.25	1.03	Cylindrical	N/A	N/A	N/A	680	790
CF 9/16 B	CF 9/16 SB	14.29	+0/-.03	9.53	+0 / -.13	4.83	+.03/-0	15.9	.8	6.4	26.2	7				3,025	3,514
CCF 9/16	CCF 9/16 S											178					
CCF 9/16 B	CCF 9/16 SB																
CFE 9/16	CFE 9/16 S	.5625	+0/-.001	.375	+0 / -.005	.190	+.001/-0	.63	.031	.25	1.03	Cylindrical	.010	.375	.250		
CFE 9/16 B	CFE 9/16 SB	14.29	+0/-.03	9.53	+0 / -.13	4.83	+.03/-0	15.9	.8	6.4	26.2	7	.25	9.53	6.35		
CCFE 9/16	CCFE 9/16 S											178					
CCFE 9/16 B	CCFE 9/16 SB																
CFH 9/16	CFH 9/16 S	.5625	+0/-.001	.375	+0 / -.005	.250	+.001/-0	.63	.031	.25	1.03	Cylindrical	N/A	N/A	N/A	680	1,580
CFH 9/16 B	CFH 9/16 SB	14.29	+0/-.03	9.53	+0 / -.13	6.35	+.03/-0	15.9	.8	6.4	26.2	7				3,025	7,028
CCFH 9/16	CCFH 9/16 S											178					
CCFH 9/16 B	CCFH 9/16 SB																

Metric dimensions for reference only.
Hex wrench size for "Broached" version is located in the wrench size chart on page B-156.
Not all parts are available from stock. Please contact customer service for availability (800) 626-2120.
For more information on bearing capabilities outside of our standard offering, please contact Application Engineering (800) 626-2093.

Inch Cam Follower Bearings

McGILL®

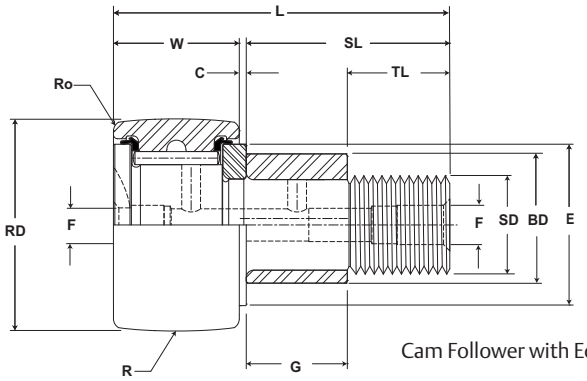

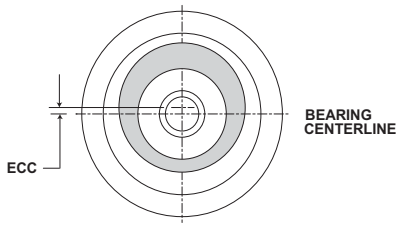

Cam Follower with Eccentric Bushing

CF, CFE, CFH

Part No.		HC	HD	F	E	Ro	HBD		Thread Type	Clamping Torque	Limiting Speed (Grease)	WT
W/O Seals	With LUBRI-DISC Seals	Hole Center	Radial Hole Diameter	Axial Hole Dia or Fitting	Min Boss Diameter	Outer Corner	Housing Bore Diameter					Bearing Weight
		inch mm			inch mm		inch mm			in-lb Nm	RPM	lb kg
		(Ref)	(Ref)	(Ref)	(Ref)	(Ref)	Nom.	Tol.				
CF 1/2 CF 1/2 B CCF 1/2 CCF 1/2 B	CF 1/2 S CF 1/2 SB CCF 1/2 S CCF 1/2 SB	-	-	.125 3.175	.410 10.41	.016 .40 N/A	.1903 4.834	+.0002/-.0003 +.0005/-.0008	10-32	15 2	11,500	.04 .02
CFE 1/2 CFE 1/2 B CCFE 1/2 CCFE 1/2 B	CFE 1/2 S CFE 1/2 SB CCFE 1/2 S CCFE 1/2 SB	-	-	.125 3.175	.410 10.41	.016 .40 N/A	.253 6.42	+.001/-.001 +.025/-.025	10-32	15 2	11,500	.04 .02
CFH 1/2 CFH 1/2 B CCFH 1/2 CCFH 1/2 B	CFH 1/2 S CFH 1/2 SB CCFH 1/2 S CCFH 1/2 SB	-	-	.125 3.175	.410 10.41	.016 .40 N/A	.2503 6.358	+.0002/-.0003 +.0005/-.0008	1/4-28	35 4	11,500	.04 .02
CF 1/2 N CF 1/2 N B CCF 1/2 N CCF 1/2 N B	CF 1/2 N S CF 1/2 N SB CCF 1/2 N S CCF 1/2 N SB	-	-	.125 3.175	.410 10.41	.016 .40 N/A	.1903 4.834	+.0002/-.0003 +.0005/-.0008	10-32	15 2	11,500	.04 .02
CFE 1/2 N CFE 1/2 N B CCFE 1/2 N CCFE 1/2 N B	CFE 1/2 N S CFE 1/2 N SB CCFE 1/2 N S CCFE 1/2 N SB	-	-	.125 3.175	.410 10.41	.016 .40 N/A	.253 6.42	+.001/-.001 +.025/-.025	10-32	15 2	11,500	.04 .02
CF 9/16 CF 9/16 B CCF 9/16 CCF 9/16 B	CF 9/16 S CF 9/16 SB CCF 9/16 S CCF 9/16 SB	-	-	.125 3.175	.410 10.41	.016 .40 N/A	.1903 4.834	+.0002/-.0003 +.0005/-.0008	10-32	15 2	10,000	.04 .02
CFE 9/16 CFE 9/16 B CCFE 9/16 CCFE 9/16 B	CFE 9/16 S CFE 9/16 SB CCFE 9/16 S CCFE 9/16 SB	-	-	.125 3.175		.016 .40 N/A	.253 6.42	+.001/-.001 +.025/-.025				
CFH 9/16 CFH 9/16 B CCFH 9/16 CCFH 9/16 B	CFH 9/16 S CFH 9/16 SB CCFH 9/16 S CCFH 9/16 SB	-	-	.125 3.175	.410 10.41	.016 .40 N/A	.2503 6.358	+.0002/-.0003 +.0005/-.0008	1/4-28	35 4	10,000	.04 .02

For positive clamping, use housing thickness equal to G dimension =.010".
Clamping torque is based on dry threads. If threads are lubricated, use half of value shown.
Hex wrench size for "Broached" version is located in the wrench size chart on page B-156.

McGILL® Inch Cam Follower Bearings

Basic Construction Type: Stud Type Crowned / Cylindrical Outside Diameter

Rolling Elements: Full Complement Needle Roller

Bearing Material: Bearing Quality Steel

Seal Type: LUBRI-DISC®

Lubrication: Lithium Soap Grease NLGI #2

System Configuration: Concentric / Eccentric / Heavy Stud

Mounting Feature: Slot / Hex Hole

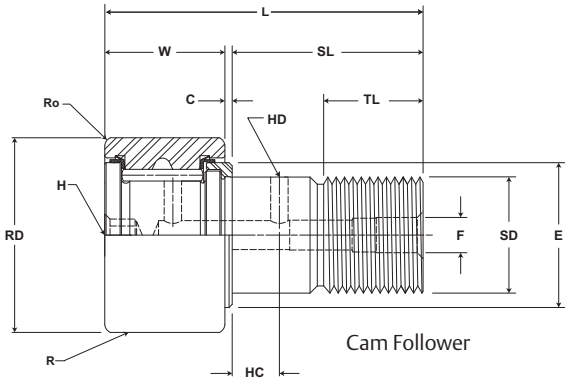

Cam Follower

CF, CFE, CFH

Part No. W/O Seals	Part No. With LUBRI-DISC Seals	RD Roller Diameter inch mm Nom.	RD Roller Diameter inch mm Tol.	W Roller Width inch mm Nom.	W Roller Width inch mm Tol.	SD Stud Diameter inch mm Nom.	SD Stud Diameter inch mm Tol.	SL Stud Length inch mm (Ref)	C Endplate Extension inch mm (Ref)	TL Min Thread Length inch mm (Ref)	L Length Overall inch mm (Ref)	R Crown Prefix CCF-XX inch mm Radius (Ref)	ECC Eccentric Base Modifier CFE-XX inch mm (Ref)	G Eccentric Base Modifier CFE-XX inch mm +0/-.010	BD Eccentric Base Modifier CFE-XX inch mm ±.001	Track Roller Dynamic Rating lb/N	Track Roller Static Rating lb/N
CF 5/8	CF 5/8 S	.625	+0/-.001	.438	+0 / -.005	.250	+.001/-0	.75	.031	.31	1.22	Cylindrical	N/A	N/A	N/A	955	1,215
CF 5/8 B	CF 5/8 SB	15.88	+0/-.03	11.11	+0 / -.13	6.35	+.03/-0	19.1	.8	7.9	31.0	8				4,248	5,404
CCF 5/8	CCF 5/8 S											203					
CCF 5/8 B	CCF 5/8 SB																
CFE 5/8	CFE 5/8 S	.625	+0/-.001	.438	+0 / -.005	.250	+.001/-0	.75	.031	.31	1.22	Cylindrical	.015	.437	.375	955	1,215
CFE 5/8 B	CFE 5/8 SB	15.88	+0/-.03	11.11	+0 / -.13	6.35	+.03/-0	19.1	.8	7.9	31.0	8	.38	11.10	9.53	4,248	5,404
CCFE 5/8	CCFE 5/8 S											203					
CCFE 5/8 B	CCFE 5/8 SB																
CFH 5/8	CFH 5/8 S	.625	+0/-.001	.438	+0 / -.005	.3125	+.001/-0	.75	.031	.31	1.22	Cylindrical	N/A	N/A	N/A	955	2,480
CFH 5/8 B	CFH 5/8 SB	15.88	+0/-.03	11.11	+0 / -.13	7.94	+.03/-0	19.1	.8	7.9	31.0	8				4,248	11,031
CCFH 5/8	CCFH 5/8 S											203					
CCFH 5/8 B	CCFH 5/8 SB																
CF 5/8 N	CF 5/8 N S	.625	+0/-.001	.406	+0 / -.005	.250	+.001/-0	.63	.031	.31	1.06	Cylindrical	N/A	N/A	N/A	930	1,085
CF 5/8 N B	CF 5/8 N SB	15.88	+0/-.03	10.31	+0 / -.13	6.35	+.03/-0	15.9	.8	7.9	27.0	7				4,137	4,826
CCF 5/8 N	CCF 5/8 N S											178					
CCF 5/8 N B	CCF 5/8 N SB																
CCFE 5/8 N													.015	.437	.375		
													.38	11.10	9.53		
CF 11/16	CF 11/16 S	.688	+0/-.001	.438	+0 / -.005	.250	+.001/-0	.75	.031	.31	1.22	Cylindrical	N/A	N/A	N/A	955	1,215
CF 11/16 B	CF 11/16 SB	17.46	+0/-.03	11.11	+0 / -.13	6.35	+.03/-0	19.1	.8	7.9	31.0	8				4,248	5,404
CCF 11/16	CCF 11/16 S											203					
CCF 11/16 B	CCF 11/16 SB																
CFE 11/16	CFE 11/16 S	.688	+0/-.001	.438	+0 / -.005	.250	+.001/-0	.75	.031	.31	1.22	Cylindrical	.015	.437	.375		
CFE 11/16 B	CFE 11/16 SB	17.46	+0/-.03	11.11	+0 / -.13	6.35	+.03/-0	19.1	.8	7.9	31.0	8	.38	11.10	9.53		
CCFE 11/16	CCFE 11/16 S											203					
CCFE 11/16 B	CCFE 11/16 SB																
CFH 11/16	CFH 11/16 S	.688	+0/-.001	.438	+0 / -.005	.3125	+.001/-0	.75	.031	.31	1.22	Cylindrical	N/A	N/A	N/A	955	2,480
CFH 11/16 B	CFH 11/16 SB	17.46	+0/-.03	11.11	+0 / -.13	7.94	+.03/-0	19.1	.8	7.9	31.0	8				4,248	11,031
CCFH 11/16	CCFH 11/16 S											203					
CCFH 11/16 B	CCFH 11/16 SB																

Metric dimensions for reference only.
Hex wrench size for "Broached" version is located in the wrench size chart on page B-156.

Not all parts are available from stock. Please contact customer service for availability (800) 626-2120.
For more information on bearing capabilities outside of our standard offering, please contact Application Engineering (800) 626-2093.

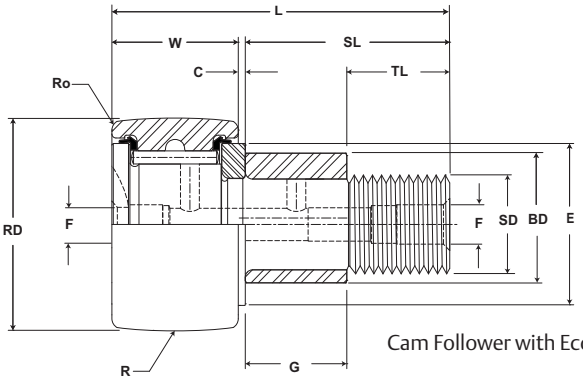

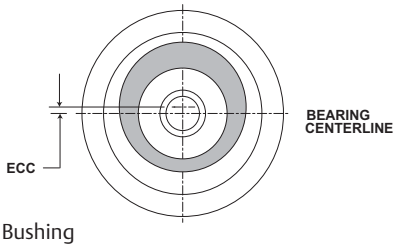

Cam Follower with Eccentric Bushing

CF, CFE, CFE

Part No.		HC	HD	F	E	Ro	HBD		Thread Type	Clamping Torque	Limiting Speed (Grease)	WT
W/O Seals	With LUBRI-DISC Seals	Hole Center	Radial Hole Diameter	Axial Hole Dia or Fitting	Min Boss Diameter	Outer Corner	Housing Bore Diameter					Bearing Weight
		inch mm			inch mm		inch mm			in-lb Nm	RPM	lb kg
		(Ref)	(Ref)	(Ref)	(Ref)	(Ref)	Nom.	Tol.				
CF 5/8 CF 5/8 B CCF 5/8 CCF 5/8 B	CF 5/8 S CF 5/8 SB CCF 5/8 S CCF 5/8 SB	-	-	.125 3.175	.462 11.73	.016 .40	.2503 6.358	+.0002/-.0003 +.0005/-.0008	1/4-28	35 4	9,200	.05 .02
						N/A						
CFE 5/8 CFE 5/8 B CCFE 5/8 CCFE 5/8 B	CFE 5/8 S CFE 5/8 SB CCFE 5/8 S CCFE 5/8 SB	-	-	.125 3.175		.016 .40	.378 9.60	+.001/-.001 +.025/-.025				
						N/A						
CFH 5/8 CFH 5/8 B CCFH 5/8 CCFH 5/8 B	CFH 5/8 S CFH 5/8 SB CCFH 5/8 S CCFH 5/8 SB	-	-	.125 3.175	.462 11.73	.016 .40	.3128 7.945	+.0002/-.0003 +.0005/-.0008	5/16-24	90 10	9,200	.05 .02
						N/A						
CF 5/8 N CF 5/8 N B CCF 5/8 N CCF 5/8 N B CCFE 5/8 N	CF 5/8 N S CF 5/8 N SB CCF 5/8 N S CCF 5/8 N SB	-	-	.125 3.175	.462 11.73	.016 .40	.2503 6.358	+.0002/-.0003 +.0005/-.0008	1/4-28	35 4	9,200	.05 .02
						N/A						
CF 11/16 CF 11/16 B CCF 11/16 CCF 11/16 B	CF 11/16 S CF 11/16 SB CCF 11/16 S CCF 11/16 SB	-	-	.125 3.175	.462 11.73	.016 .40	.2503 6.358	+.0002/-.0003 +.0005/-.0008	1/4-28	35 4	8,300	.06 .03
						N/A						
CFE 11/16 CFE 11/16 B CCFE 11/16 CCFE 11/16 B	CFE 11/16 S CFE 11/16 SB CCFE 11/16 S CCFE 11/16 SB	-	-	.125 3.175		.016 .40	.378 9.60	+.001/-.001 +.025/-.025				
						N/A						
CFH 11/16 CFH 11/16 B CCFH 11/16 CCFH 11/16 B	CFH 11/16 S CFH 11/16 SB CCFH 11/16 S CCFH 11/16 SB	-	-	.125 3.175	.462 11.73	.016 .40	.3128 7.945	+.0002/-.0003 +.0005/-.0008	5/16-24	90 10	8,300	.06 .03
						N/A						

For positive clamping, use housing thickness equal to G dimension =.010".
Clamping torque is based on dry threads. If threads are lubricated, use half of value shown.
Hex wrench size for "Broached" version is located in the wrench size chart on page B-156.

McGILL® Inch Cam Follower Bearings

Basic Construction Type: Stud Type Crowned / Cylindrical Outside Diameter

Rolling Elements: Full Complement Needle Roller

Bearing Material: Bearing Quality Steel

Seal Type: LUBRI-DISC®

Lubrication: Lithium Soap Grease NLGI #2

System Configuration: Concentric / Eccentric / Heavy Stud

Mounting Feature: Slot / Hex Hole

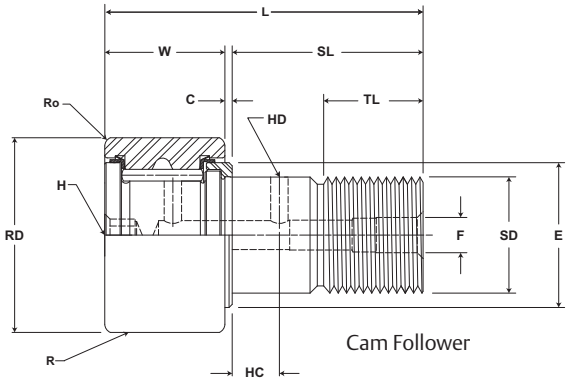

CF, CFE, CFH

Part No.		RD		W		SD		SL	C	TL	L	R	ECC	G	BD	Track Roller Dynamic Rating	Track Roller Static Rating
W/O Seals	With LUBRI-DISC Seals	Roller Diameter		Roller Width		Stud Diameter		Stud Length	Endplate Extension	Min Thread Length	Length Overall	Crown Prefix CCF-XX	Eccentric Base Modifier CFE-XX				
		inch mm		inch mm		inch mm		inch mm		inch mm		inch mm	inch mm			lb/N	
		Nom.	Tol.	Nom.	Tol.	Nom.	Tol.	(Ref)	(Ref)	(Ref)	(Ref)	Radius (Ref)	(Ref)	+0/-.010	±.001		
CF 3/4 CF 3/4 B CCF 3/4 CCF 3/4 B	CF 3/4 S CF 3/4 SB CCF 3/4 S CCF 3/4 SB	.750 19.05	+0/-.001 +0/-.03	.500 12.70	+0 / -.005 +0 / -.13	.375 9.53	+.001/-0 +.03/-0	.88 22.2	.031 .8	.38 9.5	1.41 35.7	Cylindrical 10 254	N/A	N/A	N/A	1,660 7,384	2,065 9,185
CFE 3/4 CFE 3/4 B CCFE 3/4 CCFE 3/4 B	CFE 3/4 S CFE 3/4 SB CCFE 3/4 S CCFE 3/4 SB	.750 19.05	+0/-.001 +0/-.03	.500 12.70	+0 / -.005 +0 / -.13	.375 9.53	+.001/-0 +.03/-0	.88 22.2	.031 .8	.38 9.5	1.41 35.7	Cylindrical 10 254	.015 .38	.500 12.70	.500 12.70		
CFH 3/4 CFH 3/4 B CCFH 3/4 CCFH 3/4 B	CFH 3/4 S CFH 3/4 SB CCFH 3/4 S CCFH 3/4 SB	.750 19.05	+0/-.001 +0/-.03	.500 12.70	+0 / -.005 +0 / -.13	.4375 11.11	+.001/-0 +.03/-0	.88 22.2	.031 .8	.38 9.5	1.41 35.7	Cylindrical 10 254	N/A	N/A	N/A	1,660 7,384	4,130 18,370
CF 7/8 CF 7/8 B CCF 7/8 CCF 7/8 B	CF 7/8 S CF 7/8 SB CCF 7/8 S CCF 7/8 SB	.875 22.23	+0/-.001 +0/-.03	.500 12.70	+0 / -.005 +0 / -.13	.375 9.53	+.001/-0 +.03/-0	.88 22.2	.031 .8	.38 9.5	1.41 35.7	Cylindrical 10 254	N/A	N/A	N/A	1,660 7,384	2,065 9,185
CFE 7/8 CFE 7/8 B CCFE 7/8 CCFE 7/8 B	CFE 7/8 S CFE 7/8 SB CCFE 7/8 S CCFE 7/8 SB	.875 22.23	+0/-.001 +0/-.03	.500 12.70	+0 / -.005 +0 / -.13	.375 9.53	+.001/-0 +.03/-0	.88 22.2	.031 .8	.38 9.5	1.41 35.7	Cylindrical 10 254	.015 .38	.500 12.70	.500 12.70		
CFH 7/8 CFH 7/8 B CCFH 7/8 CCFH 7/8 B	CFH 7/8 S CFH 7/8 SB CCFH 7/8 S CCFH 7/8 SB	.875 22.23	+0/-.001 +0/-.03	.500 12.70	+0 / -.005 +0 / -.13	.4375 11.11	+.001/-0 +.03/-0	.88 22.2	.031 .8	.38 9.5	1.41 35.7	Cylindrical 10 254	N/A	N/A	N/A	1,660 7,384	4,130 18,370

Metric dimensions for reference only.
Hex wrench size for "Broached" version is located in the wrench size chart on page B-156.

Not all parts are available from stock. Please contact customer service for availability (800) 626-2120.
For more information on bearing capabilities outside of our standard offering, please contact Application Engineering (800) 626-2093.

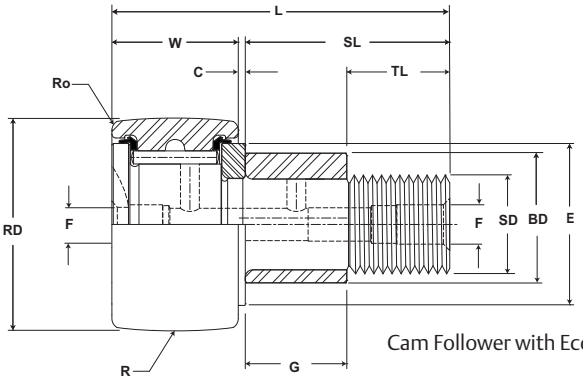

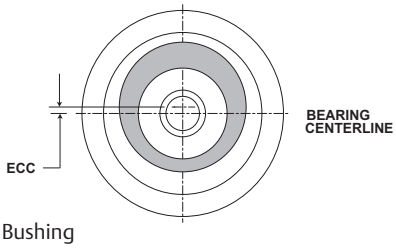

Cam Follower with Eccentric Bushing

CF, CFE, CFH

Part No.		HC	HD	F	E	Ro	HBD		Thread Type	Clamping Torque	Limiting Speed (Grease)	WT
W/O Seals	With LUBRI-DISC Seals	Hole Center	Radial Hole Diameter	Axial Hole Dia or Fitting	Min Boss Diameter	Outer Corner	Housing Bore Diameter					Bearing Weight
		inch mm			inch mm		inch mm			in-lb Nm	RPM	lb kg
		(Ref)	(Ref)	(Ref)	(Ref)	(Ref)	Nom.	Tol.				
CF 3/4	CF 3/4 S	.25 6	.0938 2	.1875 5	.609 15.48	.016 .40	.3753 9.533	+.0002/-.0003 +.0005/-.0008	3/8-24	95 11	6,400	.07 .03
CF 3/4 B	CF 3/4 SB											
CCF 3/4	CCF 3/4 S					N/A						
CCF 3/4 B	CCF 3/4 SB											
CFE 3/4	CFE 3/4 S	.25 6	.0938 2	.1875 5		.016 .40	.503 12.77	+.001/-.001 +.025/-.025				
CFE 3/4 B	CFE 3/4 SB											
CCFE 3/4	CCFE 3/4 S					N/A						
CCFE 3/4 B	CCFE 3/4 SB											
CFH 3/4	CFH 3/4 S	.25 6	.0938 2	.1875 5	.609 15.48	.016 .40	.4378 11.120	+.0002/-.0003 +.0005/-.0008	7/16-20	250 28	6,400	.08 .04
CFH 3/4 B	CFH 3/4 SB											
CCFH 3/4	CCFH 3/4 S					N/A						
CCFH 3/4 B	CCFH 3/4 SB											
CF 7/8	CF 7/8 S	.25 6	.0938 2	.1875 5	.609 15.48	.016 .40	.3753 9.533	+.0002/-.0003 +.0005/-.0008	3/8-24	95 11	5,400	.09 .04
CF 7/8 B	CF 7/8 SB											
CCF 7/8	CCF 7/8 S					N/A						
CCF 7/8 B	CCF 7/8 SB											
CFE 7/8	CFE 7/8 S	.25 6	.0938 2	.1875 5		.016 .40	.503 12.77	+.001/-.001 +.025/-.025				
CFE 7/8 B	CFE 7/8 SB											
CCFE 7/8	CCFE 7/8 S					N/A						
CCFE 7/8 B	CCFE 7/8 SB											
CFH 7/8	CFH 7/8 S	.25 6	.0938 2	.1875 5	.609 15.48	.016 .40	.4378 11.120	+.0002/-.0003 +.0005/-.0008	7/16-20	250 28	5,400	.11 .05
CFH 7/8 B	CFH 7/8 SB											
CCFH 7/8	CCFH 7/8 S					N/A						
CCFH 7/8 B	CCFH 7/8 SB											

For positive clamping, use housing thickness equal to G dimension =.010".
Clamping torque is based on dry threads. If threads are lubricated, use half of value shown.
Hex wrench size for "Broached" version is located in the wrench size chart on page B-156.

McGILL® Inch Cam Follower Bearings

Basic Construction Type: Stud Type Crowned / Cylindrical Outside Diameter

Rolling Elements: Full Complement Needle Roller

Bearing Material: Bearing Quality Steel

Seal Type: LUBRI-DISC®

Lubrication: Lithium Soap Grease NLGI #2

System Configuration: Concentric / Eccentric / Heavy Stud

Mounting Feature: Slot / Hex Hole

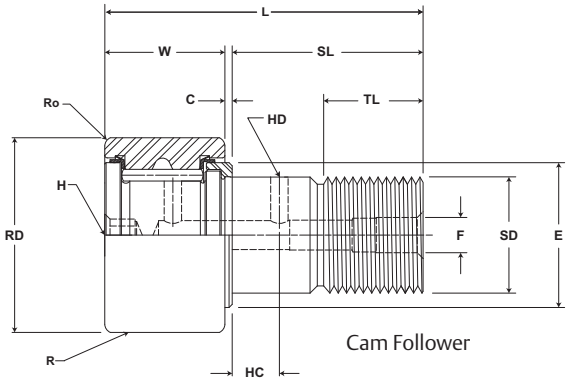

CF, CFE, CFH

Part No.		RD		W		SD		SL	C	TL	L	R	ECC	G	BD	Track Roller Dynamic Rating	Track Roller Static Rating
W/O Seals	With LUBRI-DISC Seals	Roller Diameter		Roller Width		Stud Diameter		Stud Length	Endplate Extension	Min Thread Length	Length Overall	Crown Prefix CCF-XX	Eccentric Base Modifier CFE-XX				
		inch mm		inch mm		inch mm		inch mm		inch mm		inch mm	inch mm			lb/N	
		Nom.	Tol.	Nom.	Tol.	Nom.	Tol.	(Ref)	(Ref)	(Ref)	(Ref)	Radius (Ref)	(Ref)	+0/-.010	±.001		
CF 1 CF 1 B CCF 1 CCF 1 B	CF 1 S CF 1 SB CCF 1 S CCF 1 SB	1.000 25.40	+0/-.001 +0/-.03	.625 15.88	+0 / -.005 +0 / -.13	.4375 11.11	+.001/-0 +.03/-0	1.00 25.4	.031 .8	.50 12.7	1.66 42.1	Cylindrical 12 305	N/A	N/A	N/A	2,225 9,897	3,060 13,611
CFE 1 CFE 1 B CCFE 1 CCFE 1 B	CFE 1 S CFE 1 SB CCFE 1 S CCFE 1 SB	1.000 25.40	+0/-.001 +0/-.03	.625 15.88	+0 / -.005 +0 / -.13	.4375 11.11	+.001/-0 +.03/-0	1.00 25.4	.031 .8	.50 12.7	1.66 42.1	Cylindrical 12 305	.030 .76	.500 12.70	.625 15.88		
CFH 1 CFH 1 B CCFH 1 CCFH 1 B	CFH 1 S CFH 1 SB CCFH 1 S CCFH 1 SB	1.000 25.40	+0/-.001 +0/-.03	.625 15.88	+0 / -.005 +0 / -.13	.625 15.88	+.001/-0 +.03/-0	1.00 25.4	.031 .8	.50 12.7	1.66 42.1	Cylindrical 12 305	N/A	N/A	N/A	2,225 9,897	6,120 27,222
CF 1 1/8 CF 1 1/8 B CCF 1 1/8 CCF 1 1/8 B	CF 1 1/8 S CF 1 1/8 SB CCF 1 1/8 S CCF 1 1/8 SB	1.125 28.58	+0/-.001 +0/-.03	.625 15.88	+0 / -.005 +0 / -.13	.4375 11.11	+.001/-0 +.03/-0	1.00 25.4	.031 .8	.50 12.7	.031 .8	Cylindrical 12 305	N/A	N/A	N/A	2,225 9,897	3,060 13,611
CFE 1 1/8 CFE 1 1/8 B CCFE 1 1/8 CCFE 1 1/8 B	CFE 1 1/8 S CFE 1 1/8 SB CCFE 1 1/8 S CCFE 1 1/8 SB	1.125 28.58	+0/-.001 +0/-.03	.625 15.88	+0 / -.005 +0 / -.13	.4375 11.11	+.001/-0 +.03/-0	1.00 25.4	.031 .8	.50 12.7	1.66 42.1	Cylindrical 12 305	.030 .76	.500 12.70	.625 15.88		
CFH 1 1/8 CFH 1 1/8 B CCFH 1 1/8 CCFH 1 1/8 B	CFH 1 1/8 S CFH 1 1/8 SB CCFH 1 1/8 S CCFH 1 1/8 SB	1.125 28.58	+0/-.001 +0/-.03	.625 15.88	+0 / -.005 +0 / -.13	.625 15.88	+.001/-0 +.03/-0	1.00 25.4	.031 .8	.50 12.7	1.66 42.1	Cylindrical 12 305	N/A	N/A	N/A	2,225 9,897	6,120 27,222

Metric dimensions for reference only.
Hex wrench size for "Broached" version is located in the wrench size chart on page B-156.

Not all parts are available from stock. Please contact customer service for availability (800) 626-2120.
For more information on bearing capabilities outside of our standard offering, please contact Application Engineering (800) 626-2093.

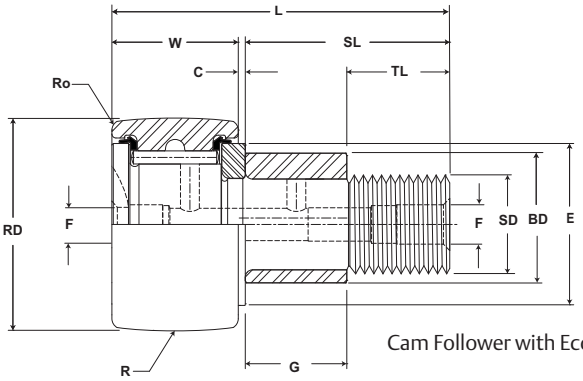

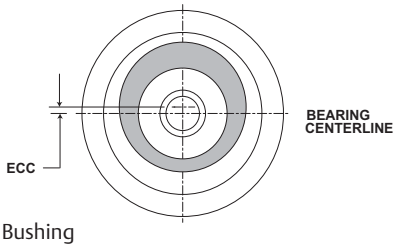

Cam Follower with Eccentric Bushing

CF, CFE, CFH

Part No.		HC	HD	F	E	Ro	HBD		Thread Type	Clamping Torque	Limiting Speed (Grease)	WT
W/O Seals	With LUBRI-DISC Seals	Hole Center	Radial Hole Diameter	Axial Hole Dia or Fitting	Min Boss Diameter	Outer Corner	Housing Bore Diameter					Bearing Weight
		inch mm			inch mm		inch mm			in-lb Nm	RPM	lb kg
		(Ref)	(Ref)	(Ref)	(Ref)	(Ref)	Nom.	Tol.				
CF 1 CF 1 B CCF 1 CCF 1 B	CF 1 S CF 1 SB CCF 1 S CCF 1 SB	.25 6	.0938 2	.1875 5	.781 19.84	.031 .79 N/A	.4378 11.120	+.0002/-.0003 +.0005/-.0008	7/16-20	250 28	4,800	.17 .08
CFE 1 CFE 1 B CCFE 1 CCFE 1 B	CFE 1 S CFE 1 SB CCFE 1 S CCFE 1 SB	.25 6	.0938 2	.1875 5		.031 .79 N/A	.628 15.95	+.001/-.001 +.025/-.025				
CFH 1 CFH 1 B CCFH 1 CCFH 1 B	CFH 1 S CFH 1 SB CCFH 1 S CCFH 1 SB	.25 6	.0938 2	.1875 5	.781 19.84	.031 .79 N/A	.6253 15.883	+.0002/-.0003 +.0005/-.0008	5/8-18	650 73	4,800	.20 .09
CF 1 1/8 CF 1 1/8 B CCF 1 1/8 CCF 1 1/8 B	CF 1 1/8 S CF 1 1/8 SB CCF 1 1/8 S CCF 1 1/8 SB	.25 6	.0938 2	.1875 5	.781 19.84	.031 .79 N/A	.4378 11.120	+.0002/-.0003 +.0005/-.0008	7/16-20	250 28	3,400	.19 .09
CFE 1 1/8 CFE 1 1/8 B CCFE 1 1/8 CCFE 1 1/8 B	CFE 1 1/8 S CFE 1 1/8 SB CCFE 1 1/8 S CCFE 1 1/8 SB	.25 6	.0938 2	.1875 5		.031 .79 N/A	.628 15.95	+.001/-.001 +.025/-.025				
CFH 1 1/8 CFH 1 1/8 B CCFH 1 1/8 CCFH 1 1/8 B	CFH 1 1/8 S CFH 1 1/8 SB CCFH 1 1/8 S CCFH 1 1/8 SB	.25 6	.0938 2	.1875 5	.781 19.84	.031 .79 N/A	.6253 15.883	+.0002/-.0003 +.0005/-.0008	5/8-18	650 73	3,400	.24 .11

For positive clamping, use housing thickness equal to G dimension =.010".
Clamping torque is based on dry threads. If threads are lubricated, use half of value shown.
Hex wrench size for "Broached" version is located in the wrench size chart on page B-156.

McGILL® Inch Cam Follower Bearings

Basic Construction Type: Stud Type Crowned / Cylindrical Outside Diameter

Rolling Elements: Full Complement Needle Roller

Bearing Material: Bearing Quality Steel

Seal Type: LUBRI-DISC®

Lubrication: Lithium Soap Grease NLGI #2

System Configuration: Concentric / Eccentric / Heavy Stud

Mounting Feature: Slot / Hex Hole

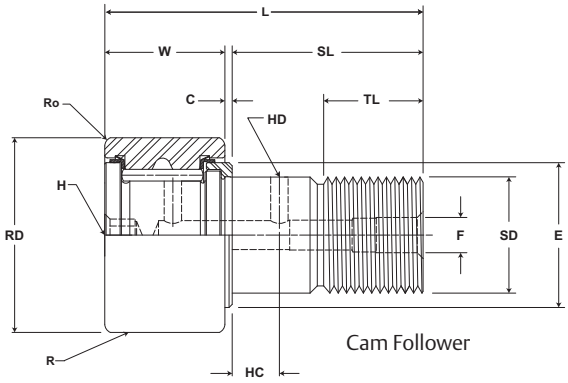

Cam Follower

CF, CFE, CFH

Part No.		RD		W		SD		SL	C	TL	L	R	ECC	G	BD	Track Roller Dynamic Rating	Track Roller Static Rating
W/O Seals	With LUBRI-DISC Seals	Roller Diameter		Roller Width		Stud Diameter		Stud Length	Endplate Extension	Min Thread Length	Length Overall	Crown Prefix CCF-XX	Eccentric Base Modifier CFE-XX				
		inch mm		inch mm		inch mm		inch mm		inch mm		inch mm	inch mm			lb/N	
		Nom.	Tol.	Nom.	Tol.	Nom.	Tol.	(Ref)	(Ref)	(Ref)	(Ref)	Radius (Ref)	(Ref)	+0/-.010	±.001		
CF 1 1/4 CF 1 1/4 B CCF 1 1/4 CCF 1 1/4 B	CF 1 1/4 S CF 1 1/4 SB CCF 1 1/4 S CCF 1 1/4 SB	1.250 31.75	+0/-.001 +0/-.03	.750 19.05	+0 / -.005 +0 / -.13	.500 12.70	+.001/-0 +.03/-0	1.25 31.8	.031 .8	.63 15.9	2.03 51.6	Cylindrical 14 356	N/A	N/A	N/A	3,930 17,481	4,250 18,904
CFE 1 1/4 CFE 1 1/4 B CCFE 1 1/4 CCFE 1 1/4 B	CFE 1 1/4 S CFE 1 1/4 SB CCFE 1 1/4 S CCFE 1 1/4 SB	1.250 31.75	+0/-.001 +0/-.03	.750 19.05	+0 / -.005 +0 / -.13	.500 12.70	+.001/-0 +.03/-0	1.25 31.8	.031 .8	.63 15.9	2.03 51.6	Cylindrical 14 356	.030 .76	.625 15.88	.687 17.45		
CFH 1 1/4 CFH 1 1/4 B CCFH 1 1/4 CCFH 1 1/4 B	CFH 1 1/4 S CFH 1 1/4 SB CCFH 1 1/4 S CCFH 1 1/4 SB	1.250 31.75	+0/-.001 +0/-.03	.750 19.05	+0 / -.005 +0 / -.13	.750 19.05	+.001/-0 +.03/-0	1.25 31.8	.031 .8	.63 15.9	2.03 51.6	Cylindrical 14 356	N/A	N/A	N/A	3,930 17,481	8,500 37,808
CF 1 3/8 CF 1 3/8 B CCF 1 3/8 CCF 1 3/8 B	CF 1 3/8 S CF 1 3/8 SB CCF 1 3/8 S CCF 1 3/8 SB	1.375 34.93	+0/-.001 +0/-.03	.750 19.05	+0 / -.005 +0 / -.13	.500 12.70	+.001/-0 +.03/-0	1.25 31.8	.031 .8	.63 15.9	2.03 51.6	Cylindrical 14 356	N/A	N/A	N/A	3,930 17,481	4,250 18,904
CFE 1 3/8 CFE 1 3/8 B CCFE 1 3/8 CCFE 1 3/8 B	CFE 1 3/8 S CFE 1 3/8 SB CCFE 1 3/8 S CCFE 1 3/8 SB	1.375 34.93	+0/-.001 +0/-.03	.750 19.05	+0 / -.005 +0 / -.13	.500 12.70	+.001/-0 +.03/-0	1.25 31.8	.031 .8	.63 15.9	2.03 51.6	Cylindrical 14 356	.030 .76	.625 15.88	.687 17.45		
CFH 1 3/8 CFH 1 3/8 B CCFH 1 3/8 CCFH 1 3/8 B	CFH 1 3/8 S CFH 1 3/8 SB CCFH 1 3/8 S CCFH 1 3/8 SB	1.375 34.93	+0/-.001 +0/-.03	.750 19.05	+0 / -.005 +0 / -.13	.750 19.05	+.001/-0 +.03/-0	1.25 31.8	.031 .8	.63 15.9	2.03 51.6	Cylindrical 14 356	N/A	N/A	N/A	3,930 17,481	8,500 37,808

Metric dimensions for reference only.
Hex wrench size for "Broached" version is located in the wrench size chart on page B-156.

Not all parts are available from stock. Please contact customer service for availability (800) 626-2120.
For more information on bearing capabilities outside of our standard offering, please contact Application Engineering (800) 626-2093.

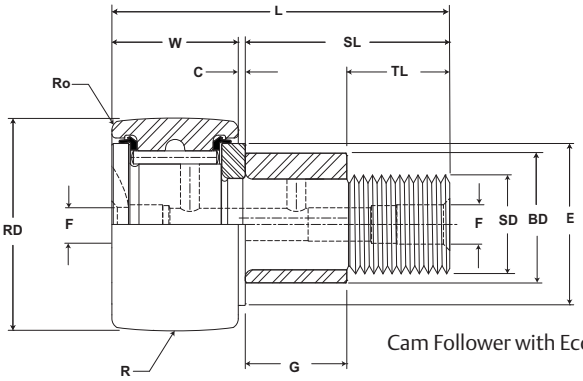

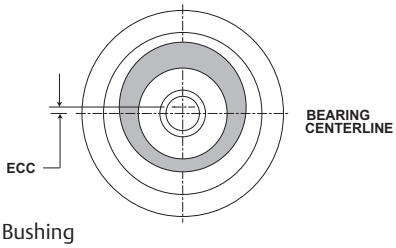

Cam Follower with Eccentric Bushing

CF, CFE, CFH

Part No.		HC	HD	F	E	Ro	HBD		Thread Type	Clamping Torque	Limiting Speed (Grease)	WT
W/O Seals	With LUBRI-DISC Seals	Hole Center	Radial Hole Diameter	Axial Hole Dia or Fitting	Min Boss Diameter	Outer Corner	Housing Bore Diameter					Bearing Weight
		inch mm			inch mm		inch mm			in-lb Nm	RPM	lb kg
		(Ref)	(Ref)	(Ref)	(Ref)	(Ref)	Nom.	Tol.				
CF 1 1/4	CF 1 1/4 S	.3125 8	.0938 2	.1875 5	.984 25.00	.031 .79	.5003 12.708	+.0002/-.0003 +.0005/-.0008	1/2-20	350 40	3,100	.30 .14
CF 1 1/4 B	CF 1 1/4 SB											
CCF 1 1/4	CCF 1 1/4 S					N/A						
CCF 1 1/4 B	CCF 1 1/4 SB											
CFE 1 1/4	CFE 1 1/4 S	.3125 8	.0938 2	.1875 5		.031 .79	.690 17.52	+.001/-.001 +.025/-.025				
CFE 1 1/4 B	CFE 1 1/4 SB											
CCFE 1 1/4	CCFE 1 1/4 S					N/A						
CCFE 1 1/4 B	CCFE 1 1/4 SB											
CFH 1 1/4	CFH 1 1/4 S	.3125 8	.0938 2	.1875 5	.984 25.00	.031 .79	.7503 19.058	+.0002/-.0003 +.0005/-.0008	3/4-16	1,250 141	3,100	.38 .17
CFH 1 1/4 B	CFH 1 1/4 SB											
CCFH 1 1/4	CCFH 1 1/4 S					N/A						
CCFH 1 1/4 B	CCFH 1 1/4 SB											
CF 1 3/8	CF 1 3/8 S	.3125 8	.0938 2	.1875 5	.984 25.00	.047 1.19	.5003 12.708	+.0002/-.0003 +.0005/-.0008	1/2-20	350 40	2,800	.35 .16
CF 1 3/8 B	CF 1 3/8 SB											
CCF 1 3/8	CCF 1 3/8 S					N/A						
CCF 1 3/8 B	CCF 1 3/8 SB											
CFE 1 3/8	CFE 1 3/8 S	.3125 8	.0938 2	.1875 5		.047 1.19	.690 17.52	+.001/-.001 +.025/-.025				
CFE 1 3/8 B	CFE 1 3/8 SB											
CCFE 1 3/8	CCFE 1 3/8 S					N/A						
CCFE 1 3/8 B	CCFE 1 3/8 SB											
CFH 1 3/8	CFH 1 3/8 S	.3125 8	.0938 2	.1875 5	.984 25.00	.047 1.19	.7503 19.058	+.0002/-.0003 +.0005/-.0008	3/4-16	1,250 141	2,800	.44 .19
CFH 1 3/8 B	CFH 1 3/8 SB											
CCFH 1 3/8	CCFH 1 3/8 S					N/A						
CCFH 1 3/8 B	CCFH 1 3/8 SB											

For positive clamping, use housing thickness equal to G dimension =.010".
Clamping torque is based on dry threads. If threads are lubricated, use half of value shown.
Hex wrench size for "Broached" version is located in the wrench size chart on page B-156.

McGILL® Inch Cam Follower Bearings

Basic Construction Type: Stud Type Crowned / Cylindrical Outside Diameter

Rolling Elements: Full Complement Needle Roller

Bearing Material: Bearing Quality Steel

Seal Type: LUBRI-DISC®

Lubrication: Lithium Soap Grease NLGI #2

System Configuration: Concentric / Eccentric / Heavy Stud

Mounting Feature: Slot / Hex Hole

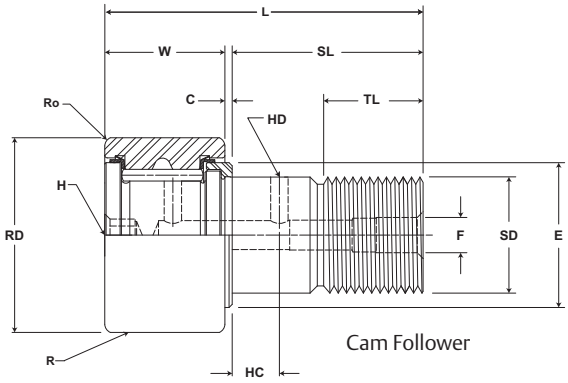

CF, CFE, CFH

Part No.		RD		W		SD		SL	C	TL	L	R	ECC	G	BD	Track Roller Dynamic Rating	Track Roller Static Rating
W/O Seals	With LUBRI-DISC Seals	Roller Diameter		Roller Width		Stud Diameter		Stud Length	Endplate Extension	Min Thread Length	Length Overall	Crown Prefix CCF-XX	Eccentric Base Modifier CFE-XX				
		inch mm		inch mm		inch mm		inch mm		inch mm		inch mm	inch mm			lb/N	
		Nom.	Tol.	Nom.	Tol.	Nom.	Tol.	(Ref)	(Ref)	(Ref)	(Ref)	Radius (Ref)	(Ref)	+0/-.010	±.001		
CF 1 1/2 CF 1 1/2 B CCF 1 1/2 CCF 1 1/2 B	CF 1 1/2 S CF 1 1/2 SB CCF 1 1/2 S CCF 1 1/2 SB	1.500 38.10	+0/-.001 +0/-.03	.875 22.23	+0 / -.005 +0 / -.13	.625 15.88	+.001/-0 +.03/-0	1.50 38.1	.031 .8	.75 19.1	2.41 61.1	Cylindrical 20 508	N/A	N/A	N/A	4,840 21,528	5,640 25,087
CFE 1 1/2 CFE 1 1/2 B CCFE 1 1/2 CCFE 1 1/2 B	CFE 1 1/2 S CFE 1 1/2 SB CCFE 1 1/2 S CCFE 1 1/2 SB	1.500 38.10	+0/-.001 +0/-.03	.875 22.23	+0 / -.005 +0 / -.13	.625 15.88	+.001/-0 +.03/-0	1.50 38.1	.031 .8	.75 19.1	2.41 61.1	Cylindrical 20 508	.030 .76	.750 19.05	875 22.23		
CFH 1 1/2 CFH 1 1/2 B CCFH 1 1/2 CCFH 1 1/2 B	CFH 1 1/2 S CFH 1 1/2 SB CCFH 1 1/2 S CCFH 1 1/2 SB	1.500 38.10	+0/-.001 +0/-.03	.875 22.23	+0 / -.005 +0 / -.13	.875 22.23	+.001/-0 +.03/-0	1.50 38.1	.031 .8	.75 19.1	2.41 61.1	Cylindrical 20 508	N/A	N/A	N/A	4,840 21,528	11,280 50,173
CF 1 5/8 CF 1 5/8 B CCF 1 5/8 CCF 1 5/8 B	CF 1 5/8 S CF 1 5/8 SB CCF 1 5/8 S CCF 1 5/8 SB	1.625 41.28	+0/-.001 +0/-.03	.875 22.23	+0 / -.005 +0 / -.13	.625 15.88	+.001/-0 +.03/-0	1.50 38.1	.031 .8	.75 19.1	2.41 61.1	Cylindrical 20 508	N/A	N/A	N/A	4,840 21,528	5,640 25,087
CFE 1 5/8 CFE 1 5/8 B CCFE 1 5/8 CCFE 1 5/8 B	CFE 1 5/8 S CFE 1 5/8 SB CCFE 1 5/8 S CCFE 1 5/8 SB	1.625 41.28	+0/-.001 +0/-.03	.875 22.23	+0 / -.005 +0 / -.13	.625 15.88	+.001/-0 +.03/-0	1.50 38.1	.031 .8	.75 19.1	2.41 61.1	Cylindrical 20 508	.030 .76	.750 19.05	.875 22.23		
CFH 1 5/8 CFH 1 5/8 B CCFH 1 5/8 CCFH 1 5/8 B	CFH 1 5/8 S CFH 1 5/8 SB CCFH 1 5/8 S CCFH 1 5/8 SB	1.625 41.28	+0/-.001 +0/-.03	.875 22.23	+0 / -.005 +0 / -.13	.875 22.23	+.001/-0 +.03/-0	1.50 38.1	.031 .8	.75 19.1	2.41 61.1	Cylindrical 20 508	N/A	N/A	N/A	4,840 21,528	11,280 50,173

Metric dimensions for reference only.
Hex wrench size for "Broached" version is located in the wrench size chart on page B-156.

Not all parts are available from stock. Please contact customer service for availability (800) 626-2120.
For more information on bearing capabilities outside of our standard offering, please contact Application Engineering (800) 626-2093.

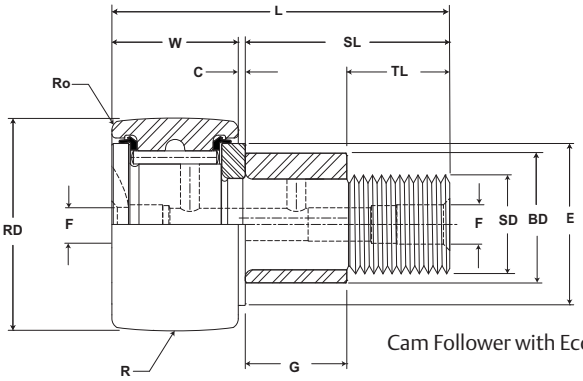

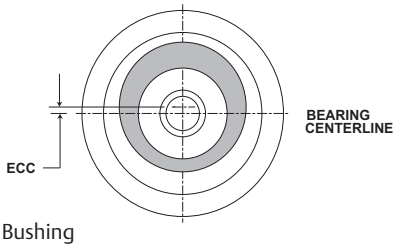

Cam Follower with Eccentric Bushing

CF, CFE, CFH

Part No.		HC	HD	F	E	Ro	HBD		Thread Type	Clamping Torque	Limiting Speed (Grease)	WT
W/O Seals	With LUBRI-DISC Seals	Hole Center	Radial Hole Diameter	Axial Hole Dia or Fitting	Min Boss Diameter	Outer Corner	Housing Bore Diameter					Bearing Weight
		inch mm			inch mm		inch mm			in-lb Nm	RPM	lb kg
		(Ref)	(Ref)	(Ref)	(Ref)	(Ref)	Nom.	Tol.				
CF 1 1/2	CF 1 1/2 S	.375 10	.0938 2	.1875 5	1.094 27.78	.063 1.59	.6253 15.883	+.0002/-.0003 +.0005/-.0008	5/8-18	650 73	2,500	.53 .24
CF 1 1/2 B	CF 1 1/2 SB											
CCF 1 1/2	CCF 1 1/2 S					N/A						
CCF 1 1/2 B	CCF 1 1/2 SB											
CFE 1 1/2	CFE 1 1/2 S	.375 10	.0938 2	.1875 5		.063 1.59	.878 22.30	+.001/-.001 +.025/-.025				
CFE 1 1/2 B	CFE 1 1/2 SB											
CCFE 1 1/2	CCFE 1 1/2 S					N/A						
CCFE 1 1/2 B	CCFE 1 1/2 SB											
CFH 1 1/2	CFH 1 1/2 S	.375 10	.0938 2	.1875 5	1.094 27.78	.063 1.59	.8753 22.233	+.0002/-.0003 +.0005/-.0008	7/8-14	1,500 170	2,500	.69 .31
CFH 1 1/2 B	CFH 1 1/2 SB											
CCFH 1 1/2	CCFH 1 1/2 S					N/A						
CCFH 1 1/2 B	CCFH 1 1/2 SB											
CF 1 5/8	CF 1 5/8 S	.375 10	.0938 2	.1875 5	1.094 27.78	.063 1.59	.6253 15.883	+.0002/-.0003 +.0005/-.0008	5/8-18	650 73	2,350	.60 .27
CF 1 5/8 B	CF 1 5/8 SB											
CCF 1 5/8	CCF 1 5/8 S					N/A						
CCF 1 5/8 B	CCF 1 5/8 SB											
CFE 1 5/8	CFE 1 5/8 S	.375 10	.0938 2	.1875 5		.063 1.59	.878 22.30	+.001/-.001 +.025/-.025				
CFE 1 5/8 B	CFE 1 5/8 SB											
CCFE 1 5/8	CCFE 1 5/8 S					N/A						
CCFE 1 5/8 B	CCFE 1 5/8 SB											
CFH 1 5/8	CFH 1 5/8 S	.375 10	.0938 2	.1875 5	1.094 27.78	.063 1.59	.8753 22.233	+.0002/-.0003 +.0005/-.0008	7/8-14	1,500 170	2,350	.75 .34
CFH 1 5/8 B	CFH 1 5/8 SB											
CCFH 1 5/8	CCFH 1 5/8 S					N/A						
CCFH 1 5/8 B	CCFH 1 5/8 SB											

For positive clamping, use housing thickness equal to G dimension =.010".
Clamping torque is based on dry threads. If threads are lubricated, use half of value shown.
Hex wrench size for "Broached" version is located in the wrench size chart on page B-156.

McGILL® Inch Cam Follower Bearings

Basic Construction Type: Stud Type Crowned / Cylindrical Outside Diameter

Rolling Elements: Full Complement Needle Roller

Bearing Material: Bearing Quality Steel

Seal Type: LUBRI-DISC®

Lubrication: Lithium Soap Grease NLGI #2

System Configuration: Concentric / Eccentric / Heavy Stud

Mounting Feature: Slot / Hex Hole

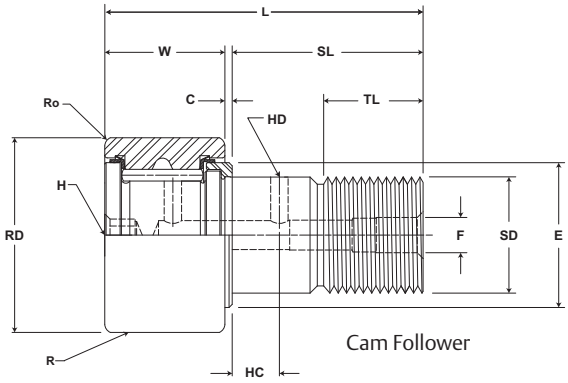

Cam Follower

CF, CFE, CFH

Part No.		RD		W		SD		SL	C	TL	L	R	ECC	G	BD	Track Roller Dynamic Rating	Track Roller Static Rating
W/O Seals	With LUBRI-DISC Seals	Roller Diameter		Roller Width		Stud Diameter		Stud Length	Endplate Extension	Min Thread Length	Length Overall	Crown Prefix CCF-XX	Eccentric Base Modifier CFE-XX				
		inch mm		inch mm		inch mm		inch mm		inch mm		inch mm	inch mm			lb/N	
		Nom.	Tol.	Nom.	Tol.	Nom.	Tol.	(Ref)	(Ref)	(Ref)	(Ref)	Radius (Ref)	(Ref)	+0/-.010	±.001		
CF 1 3/4 CF 1 3/4 B CCF 1 3/4 CCF 1 3/4 B	CF 1 3/4 S CF 1 3/4 SB CCF 1 3/4 S CCF 1 3/4 SB	1.750 44.45	+0/-.001 +0/-.03	1.000 25.40	+0 / -.005 +0 / -.13	.750 19.05	+.001/-0 +.03/-0	1.75 44.5	.031 .8	.88 22.2	2.78 70.6	Cylindrical 20 508	N/A	N/A	N/A	6,385 28,400	7,920 35,228
CFE 1 3/4 CFE 1 3/4 B CCFE 1 3/4 CCFE 1 3/4 B	CFE 1 3/4 S CFE 1 3/4 SB CCFE 1 3/4 S CCFE 1 3/4 SB	1.750 44.45	+0/-.001 +0/-.03	1.000 25.40	+0 / -.005 +0 / -.13	.750 19.05	+.001/-0 +.03/-0	1.75 44.5	.031 .8	.88 22.2	2.78 70.6	Cylindrical 20 508	.030 .76	.875 22.23	1.000 25.40		
CFH 1 3/4 CFH 1 3/4 B CCFH 1 3/4 CCFH 1 3/4 B	CFH 1 3/4 S CFH 1 3/4 SB CCFH 1 3/4 S CCFH 1 3/4 SB	1.750 44.45	+0/-.001 +0/-.03	1.000 25.40	+0 / -.005 +0 / -.13	1.000 25.40	+.001/-0 +.03/-0	1.75 44.5	.031 .8	.88 22.2	2.78 70.6	Cylindrical 20 508	N/A	N/A	N/A	6,385 28,400	15,840 70,456
CF 1 7/8 CF 1 7/8 B CCF 1 7/8 CCF 1 7/8 B	CF 1 7/8 S CF 1 7/8 SB CCF 1 7/8 S CCF 1 7/8 SB	1.875 47.63	+0/-.001 +0/-.03	1.000 25.40	+0 / -.005 +0 / -.13	.750 19.05	+.001/-0 +.03/-0	1.75 44.5	.031 .8	.88 22.2	2.78 70.6	Cylindrical 20 508	N/A	N/A	N/A	6,385 28,400	7,920 35,228
CFE 1 7/8 CFE 1 7/8 B CCFE 1 7/8 CCFE 1 7/8 B	CFE 1 7/8 S CFE 1 7/8 SB CCFE 1 7/8 S CCFE 1 7/8 SB	1.875 47.63	+0/-.001 +0/-.03	1.000 25.40	+0 / -.005 +0 / -.13	.750 19.05	+.001/-0 +.03/-0	1.75 44.5	.031 .8	.88 22.2	2.78 70.6	Cylindrical 20 508	.030 .76	.875 22.24	1.000 25.40		
CFH 1 7/8 CFH 1 7/8 B CCFH 1 7/8 CCFH 1 7/8 B	CFH 1 7/8 S CFH 1 7/8 SB CCFH 1 7/8 S CCFH 1 7/8 SB	1.875 47.63	+0/-.001 +0/-.03	1.000 25.40	+0 / -.005 +0 / -.13	1.000 25.40	+.001/-0 +.03/-0	1.75 44.5	.031 .8	.88 22.2	2.78 70.6	Cylindrical 20 508	N/A	N/A	N/A	6,385 28,400	15,840 70,456

Metric dimensions for reference only.
Hex wrench size for "Broached" version is located in the wrench size chart on page B-156.

Not all parts are available from stock. Please contact customer service for availability (800) 626-2120.
For more information on bearing capabilities outside of our standard offering, please contact Application Engineering (800) 626-2093.

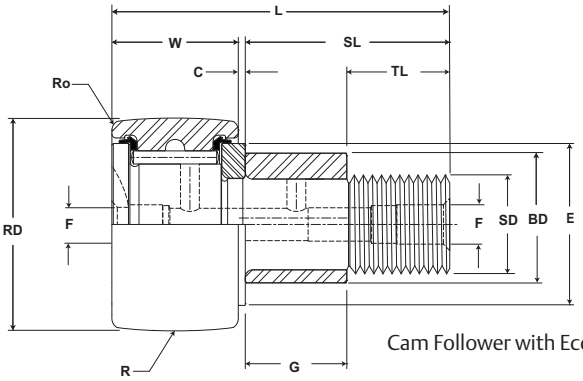

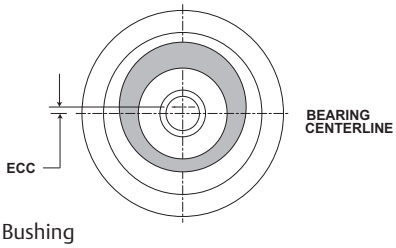

Cam Follower with Eccentric Bushing

CF, CFE, CFH

Part No.		HC	HD	F	E	Ro	HBD		Thread Type	Clamping Torque	Limiting Speed (Grease)	WT
W/O Seals	With LUBRI-DISC Seals	Hole Center	Radial Hole Diameter	Axial Hole Dia or Fitting	Min Boss Diameter	Outer Corner	Housing Bore Diameter					Bearing Weight
		inch mm			inch mm		inch mm			in-lb Nm	RPM	lb kg
		(Ref)	(Ref)	(Ref)	(Ref)	(Ref)	Nom.	Tol.				
CF 1 3/4	CF 1 3/4 S	.4375 11	.125 3	.1875 5	1.250 31.75	.063 1.59	.7503 19.058	+.0002/-.0003 +.0005/-.0008	3/4-16	1,250 141	2,200	.84 .38
CF 1 3/4 B	CF 1 3/4 SB											
CCF 1 3/4	CCF 1 3/4 S					N/A						
CCF 1 3/4 B	CCF 1 3/4 SB											
CFE 1 3/4	CFE 1 3/4 S	.4375 11	.125 3	.1875 5		.063 1.59	1.003 25.47	+.001/-.001 +.025/-.025				
CFE 1 3/4 B	CFE 1 3/4 SB											
CCFE 1 3/4	CCFE 1 3/4 S					N/A						
CCFE 1 3/4 B	CCFE 1 3/4 SB											
CFH 1 3/4	CFH 1 3/4 S	.4375 11	.125 3	.1875 5	1.250 31.75	.063 1.59	1.0003 25.408	+.0002/-.0003 +.0005/-.0008	1-14	2,250 254	2,200	1.00 .45
CFH 1 3/4 B	CFH 1 3/4 SB											
CCFH 1 3/4	CCFH 1 3/4 S					N/A						
CCFH 1 3/4 B	CCFH 1 3/4 SB											
CF 1 7/8	CF 1 7/8 S	.4375 11	.125 3	.1875 5	1.250 31.75	.063 1.59	.7503 19.058	+.0002/-.0003 +.0005/-.0008	3/4-16	1,250 141	2,000	.95 .43
CF 1 7/8 B	CF 1 7/8 SB											
CCF 1 7/8	CCF 1 7/8 S					N/A						
CCF 1 7/8 B	CCF 1 7/8 SB											
CFE 1 7/8	CFE 1 7/8 S	.4375 11	.125 3	.1875 5		.063 1.59	1.003 25.47	+.001/-.001 +.025/-.025				
CFE 1 7/8 B	CFE 1 7/8 SB											
CCFE 1 7/8	CCFE 1 7/8 S					N/A						
CCFE 1 7/8 B	CCFE 1 7/8 SB											
CFH 1 7/8	CFH 1 7/8 S	.4375 11	.125 3	.1875 5	1.250 31.75	.063 1.59	1.0003 25.408	+.0002/-.0003 +.0005/-.0008	1-14	2,250 254	2,000	1.15 .52
CFH 1 7/8 B	CFH 1 7/8 SB											
CCFH 1 7/8	CCFH 1 7/8 S					N/A						
CCFH 1 7/8 B	CCFH 1 7/8 SB											

For positive clamping, use housing thickness equal to G dimension =.010".
Clamping torque is based on dry threads. If threads are lubricated, use half of value shown.
Hex wrench size for "Broached" version is located in the wrench size chart on page B-156.

McGILL® Inch Cam Follower Bearings

Basic Construction Type: Stud Type Crowned / Cylindrical Outside Diameter

Rolling Elements: Full Complement Needle Roller

Bearing Material: Bearing Quality Steel

Seal Type: LUBRI-DISC®

Lubrication: Lithium Soap Grease NLGI #2

System Configuration: Concentric / Eccentric / Heavy Stud

Mounting Feature: Slot / Hex Hole

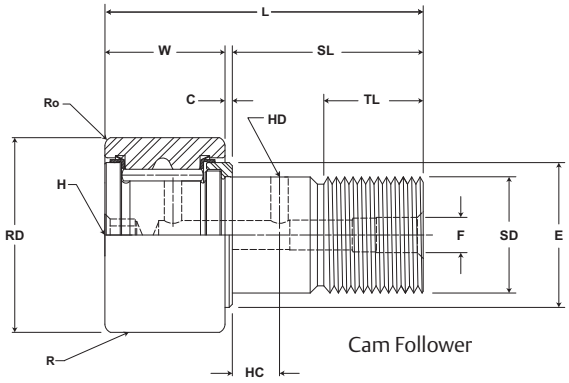

Cam Follower

CF, CFE, CFH

Part No.		RD		W		SD		SL	C	TL	L	R	ECC	G	BD	Track Roller Dynamic Rating	Track Roller Static Rating
W/O Seals	With LUBRI-DISC Seals	Roller Diameter		Roller Width		Stud Diameter		Stud Length	Endplate Extension	Min Thread Length	Length Overall	Crown Prefix CCF-XX	Eccentric Base Modifier CFE-XX				
		inch mm		inch mm		inch mm		inch mm		inch mm		inch mm	inch mm			lb/N	
		Nom.	Tol.	Nom.	Tol.	Nom.	Tol.	(Ref)	(Ref)	(Ref)	(Ref)	Radius (Ref)	(Ref)	+0/-.010	±.001		
CF 2 CF 2 B CCF 2 CCF 2 B	CF 2 S CF 2 SB CCF 2 S CCF 2 SB	2.000 50.80	+0/-.001 +0/-.03	1.250 31.75	+0 / -.005 +0 / -.13	.875 22.23	+.001/-0 +.03/-0	2.00 50.8	.031 .8	1.00 25.4	3.28 83.3	Cylindrical 24 610	N/A	N/A	N/A	8,090 35,984	10,570 47,015
CFE 2 CFE 2 B CCFE 2 CCFE 2 B	CFE 2 S CFE 2 SB CCFE 2 S CCFE 2 SB	2.000 50.80	+0/-.001 +0/-.03	1.250 31.75	+0 / -.005 +0 / -.13	.875 22.23	+.001/-0 +.03/-0	2.00 50.8	.031 .8	1.00 25.4	3.28 83.3	Cylindrical 24 610	.030 .76	1.000 25.40	1.187 30.15		
CFH 2 CFH 2 B CCFH 2 CCFH 2 B	CFH 2 S CFH 2 SB CCFH 2 S CCFH 2 SB	2.000 50.80	+0/-.001 +0/-.03	1.250 31.75	+0 / -.005 +0 / -.13	1.125 28.58	+.001/-0 +.03/-0	2.00 50.8	.031 .8	1.00 25.4	3.28 83.3	Cylindrical 24 610	N/A	N/A	N/A	8,090 35,984	21,140 94,031
CF 2 1/4 CF 2 1/4 B CCF 2 1/4 CCF 2 1/4 B	CF 2 1/4 S CF 2 1/4 SB CCF 2 1/4 S CCF 2 1/4 SB	2.250 57.15	+0/-.001 +0/-.03	1.250 31.75	+0 / -.005 +0 / -.13	.875 22.23	+.001/-0 +.03/-0	2.00 50.8	.031 .8	1.00 25.4	3.28 83.3	Cylindrical 24 610	N/A	N/A	N/A	8,090 35,984	10,570 47,015
CFE 2 1/4 CFE 2 1/4 B CCFE 2 1/4 CCFE 2 1/4 B	CFE 2 1/4 S CFE 2 1/4 SB CCFE 2 1/4 S CCFE 2 1/4 SB	2.250 57.15	+0/-.001 +0/-.03	1.250 31.75	+0 / -.005 +0 / -.13	.875 22.23	+.001/-0 +.03/-0	2.00 50.8	.031 .8	1.00 25.4	3.28 83.3	Cylindrical 24 610	.030 .76	1.000 25.40	1.187 30.15		
CFH 2 1/4 CFH 2 1/4 B CCFH 2 1/4 CCFH 2 1/4 B	CFH 2 1/4 S CFH 2 1/4 SB CCFH 2 1/4 S CCFH 2 1/4 SB	2.250 57.15	+0/-.001 +0/-.03	1.250 31.75	+0 / -.005 +0 / -.13	1.125 28.58	+.001/-0 +.03/-0	2.00 50.8	.031 .8	1.00 25.4	3.28 83.3	Cylindrical 24 610	N/A	N/A	N/A	8,090 35,984	21,140 94,031

Metric dimensions for reference only.
Hex wrench size for "Broached" version is located in the wrench size chart on page B-156.

Not all parts are available from stock. Please contact customer service for availability (800) 626-2120.
For more information on bearing capabilities outside of our standard offering, please contact Application Engineering (800) 626-2093.

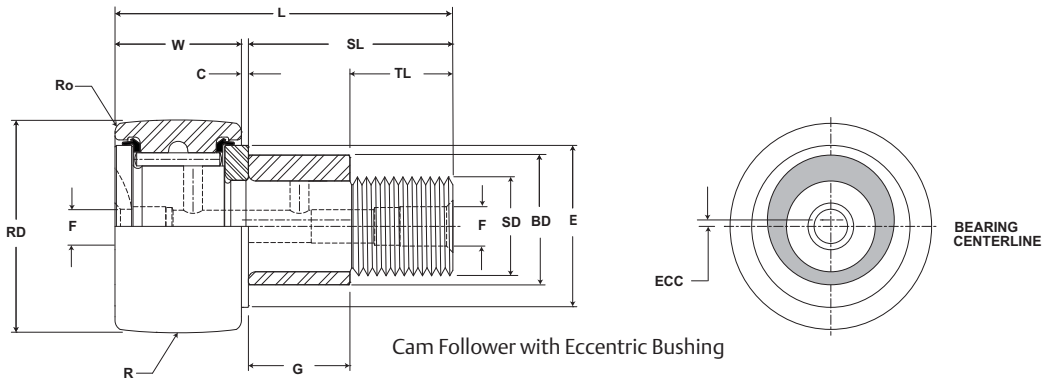

Cam Follower with Eccentric Bushing

CF, CFE, CFH

Part No.		HC	HD	F	E	Ro	HBD		Thread Type	Clamping Torque	Limiting Speed (Grease)	WT
W/O Seals	With LUBRI-DISC Seals	Hole Center	Radial Hole Diameter	Axial Hole Dia or Fitting	Min Boss Diameter	Outer Corner	Housing Bore Diameter					Bearing Weight
		inch mm			inch mm		inch mm			in-lb Nm	RPM	lb kg
		(Ref)	(Ref)	(Ref)	(Ref)	(Ref)	Nom.	Tol.				
CF 2 CF 2 B CCF 2 CCF 2 B	CF 2 S CF 2 SB CCF 2 S CCF 2 SB	.50 13	.125 3	.1875 5	1.406 35.72	.094 2.38 N/A	.8753 22.233	+.0002/-.0003 +.0005/-.0008	7/8-14	1,500 170	1,400	1.36 .62
CFE 2 CFE 2 B CCFE 2 CCFE 2 B	CFE 2 S CFE 2 SB CCFE 2 S CCFE 2 SB	.50 13	.125 3	.1875 5		.094 2.38 N/A	1.190 30.22	+.001/-.001 +.025/-.025				
CFH 2 CFH 2 B CCFH 2 CCFH 2 B	CFH 2 S CFH 2 SB CCFH 2 S CCFH 2 SB	.50 13	.125 3	.1875 5	1.406 35.72	.094 2.38 N/A	1.1253 28.583	+.0002/-.0003 +.0005/-.0008	1 1/8-12	2,800 316	1,400	1.56 .71
CF 2 1/4 CF 2 1/4 B CCF 2 1/4 CCF 2 1/4 B	CF 2 1/4 S CF 2 1/4 SB CCF 2 1/4 S CCF 2 1/4 SB	.50 13	.125 3	.1875 5	1.406 35.72	.094 2.38 N/A	.8753 22.233	+.0002/-.0003 +.0005/-.0008	7/8-14	1,500 170	1,300	1.65 .75
CFE 2 1/4 CFE 2 1/4 B CCFE 2 1/4 CCFE 2 1/4 B	CFE 2 1/4 S CFE 2 1/4 SB CCFE 2 1/4 S CCFE 2 1/4 SB	.50 13	.125 3	.1875 5		.094 2.38 N/A	1.190 30.22	+.001/-.001 +.025/-.025				
CFH 2 1/4 CFH 2 1/4 B CCFH 2 1/4 CCFH 2 1/4 B	CFH 2 1/4 S CFH 2 1/4 SB CCFH 2 1/4 S CCFH 2 1/4 SB	.50 13	.125 3	.1875 5	1.406 35.72	.094 2.38 N/A	1.1253 28.583	+.0002/-.0003 +.0005/-.0008	1 1/8-12	2,800 316	1,300	1.88 .85

For positive clamping, use housing thickness equal to G dimension =.010".
Clamping torque is based on dry threads. If threads are lubricated, use half of value shown.
Hex wrench size for "Broached" version is located in the wrench size chart on page B-156.

McGILL® Inch Cam Follower Bearings

Basic Construction Type: Stud Type Crowned / Cylindrical Outside Diameter

Rolling Elements: Full Complement Needle Roller

Bearing Material: Bearing Quality Steel

Seal Type: LUBRI-DISC®

Lubrication: Lithium Soap Grease NLGI #2

System Configuration: Concentric / Eccentric / Heavy Stud

Mounting Feature: Slot / Hex Hole

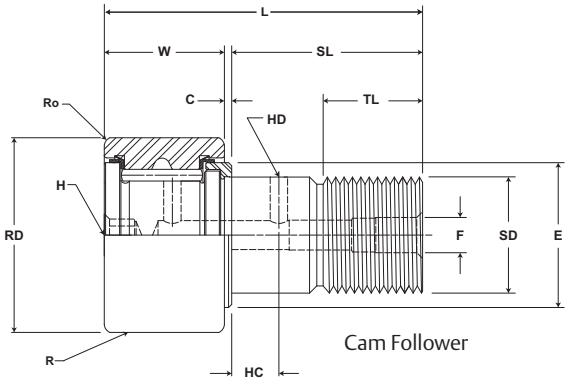

CF, CFE, CFH

Part No.		RD		W		SD		SL	C	TL	L	R	ECC	G	BD	Track Roller Dynamic Rating	Track Roller Static Rating
W/O Seals	With LUBRI-DISC Seals	Roller Diameter		Roller Width		Stud Diameter		Stud Length	Endplate Extension	Min Thread Length	Length Overall	Crown Prefix CCF-XX	Eccentric Base Modifier CFE-XX				
		inch mm		inch mm		inch mm		inch mm		inch mm		inch mm	inch mm			lb/N	
		Nom.	Tol.	Nom.	Tol.	Nom.	Tol.	(Ref)	(Ref)	(Ref)	(Ref)	Radius (Ref)	(Ref)	+0/-.010	±.001		
CF 2 1/2 CF 2 1/2 B CCF 2 1/2 CCF 2 1/2 B	CF 2 1/2 S CF 2 1/2 SB CCF 2 1/2 S CCF 2 1/2 SB	2.500 63.50	+0/-.001 +0/-.03	1.500 38.10	+0 / -.005 +0 / -.13	1.000 25.40	+.001/-0 +.03/-0	2.25 57.2	.031 .8	1.125 28.57	3.78 96.0	Cylindrical 30 762	N/A	N/A	N/A	11,720 52,131	16,450 73,170
CFE 2 1/2 CFE 2 1/2 B CCFE 2 1/2 CCFE 2 1/2 B	CFE 2 1/2 S CFE 2 1/2 SB CCFE 2 1/2 S CCFE 2 1/2 SB	2.500 63.50	+0/-.001 +0/-.03	1.500 38.10	+0 / -.005 +0 / -.13	1.000 25.40	+.001/-0 +.03/-0	2.25 57.2	.031 .8	1.125 28.57	3.78 96.0	Cylindrical 30 762	.030 .76	1.125 28.58	1.375 34.93		
CFH 2 1/2 CFH 2 1/2 B CCFH 2 1/2 CCFH 2 1/2 B	CFH 2 1/2 S CFH 2 1/2 SB CCFH 2 1/2 S CCFH 2 1/2 SB	2.500 63.50	+0/-.001 +0/-.03	1.500 38.10	+0 / -.005 +0 / -.13	1.250 31.75	+.001/-0 +.03/-0	2.25 57.2	.031 .8	1.125 28.57	3.78 96.0	Cylindrical 30 762	N/A	N/A	N/A	11,720 52,131	32,900 146,339
CF 2 3/4 CF 2 3/4 B CCF 2 3/4 CCF 2 3/4 B	CF 2 3/4 S CF 2 3/4 SB CCF 2 3/4 S CCF 2 3/4 SB	2.750 69.85	+0/-.001 +0/-.03	1.500 38.10	+0 / -.005 +0 / -.13	1.000 25.40	+.001/-0 +.03/-0	2.25 57.2	.031 .8	1.125 28.57	3.78 96.0	Cylindrical 30 762	N/A	N/A	N/A	11,720 52,131	16,450 73,170
CFE 2 3/4 CFE 2 3/4 B CCFE 2 3/4 CCFE 2 3/4 B	CFE 2 3/4 S CFE 2 3/4 SB CCFE 2 3/4 S CCFE 2 3/4 SB	2.750 69.85	+0/-.001 +0/-.03	1.500 38.10	+0 / -.005 +0 / -.13	1.000 25.40	+.001/-0 +.03/-0	2.25 57.2	.031 .8	1.125 28.57	3.78 96.0	Cylindrical 30 762	.030 .76	1.125 28.58	1.375 34.93		
CFH 2 3/4 CFH 2 3/4 B CCFH 2 3/4 CCFH 2 3/4 B	CFH 2 3/4 S CFH 2 3/4 SB CCFH 2 3/4 S CCFH 2 3/4 SB	2.750 69.85	+0/-.001 +0/-.03	1.500 38.10	+0 / -.005 +0 / -.13	1.250 31.75	+.001/-0 +.03/-0	2.25 57.2	.031 .8	1.125 28.57	3.78 96.0	Cylindrical 30 762	N/A	N/A	N/A	11,720 52,131	32,900 146,339

Metric dimensions for reference only.
Hex wrench size for "Broached" version is located in the wrench size chart on page B-156.

Not all parts are available from stock. Please contact customer service for availability (800) 626-2120.
For more information on bearing capabilities outside of our standard offering, please contact Application Engineering (800) 626-2093.

Inch Cam Follower Bearings

McGILL®

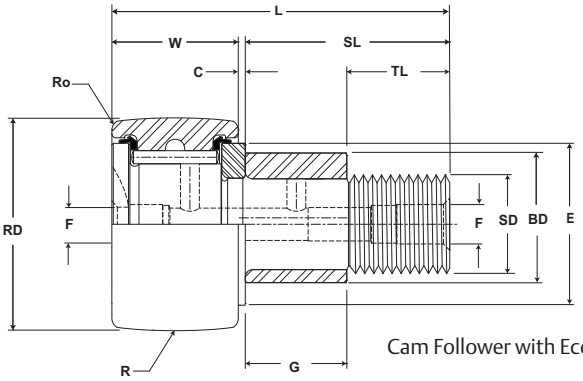

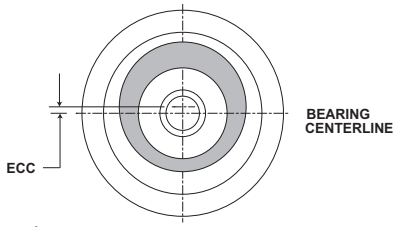

Cam Follower with Eccentric Bushing

CF, CFE, CFH

Part No.		HC	HD	F	E	Ro	HBD		Thread Type	Clamping Torque	Limiting Speed (Grease)	WT
W/O Seals	With LUBRI-DISC Seals	Hole Center	Radial Hole Diameter	Axial Hole Dia or Fitting	Min Boss Diameter	Outer Corner	Housing Bore Diameter					Bearing Weight
		inch mm			inch mm		inch mm			in-lb Nm	RPM	lb kg
		(Ref)	(Ref)	(Ref)	(Ref)	(Ref)	Nom.	Tol.				
CF 2 1/2	CF 2 1/2 S	.5625 14	.125 3	.1875 5	1.688 42.86	.094 2.38	1.0003 25.408	+.0002/-.0003 +.0005/-.0008	1-14	2,250 254	1,100	2.50 1.13
CF 2 1/2 B	CF 2 1/2 SB											
CCF 2 1/2	CCF 2 1/2 S					N/A						
CCF 2 1/2 B	CCF 2 1/2 SB											
CFE 2 1/2	CFE 2 1/2 S	.5625 14	.125 3	.1875 5		.094 2.38	1.378 35.00	+.001/-.001 +.025/-.025				
CFE 2 1/2 B	CFE 2 1/2 SB											
CCFE 2 1/2	CCFE 2 1/2 S					N/A						
CCFE 2 1/2 B	CCFE 2 1/2 SB											
CFH 2 1/2	CFH 2 1/2 S	.5625 14	.125 3	.1875 5	1.688 42.86	.094 2.38	1.2503 31.758	+.0002/-.0003 +.0005/-.0008	1 1/4-12	3,450 390	1,100	2.75 1.25
CFH 2 1/2 B	CFH 2 1/2 SB											
CCFH 2 1/2	CCFH 2 1/2 S					N/A						
CCFH 2 1/2 B	CCFH 2 1/2 SB											
CF 2 3/4	CF 2 3/4 S	.5625 14	.125 3	.1875 5	1.688 42.86	.094 2.38	1.0003 25.408	+.0002/-.0003 +.0005/-.0008	1-14	2,250 254	1,050	2.93 1.33
CF 2 3/4 B	CF 2 3/4 SB											
CCF 2 3/4	CCF 2 3/4 S					N/A						
CCF 2 3/4 B	CCF 2 3/4 SB											
CFE 2 3/4	CFE 2 3/4 S	.5625 14	.125 3	.1875 5		.094 2.38	1.378 35.00	+.001/-.001 +.025/-.025				
CFE 2 3/4 B	CFE 2 3/4 SB											
CCFE 2 3/4	CCFE 2 3/4 S					N/A						
CCFE 2 3/4 B	CCFE 2 3/4 SB											
CFH 2 3/4	CFH 2 3/4 S	.5625 14	.125 3	.1875 5	1.688 42.86	.094 2.38	1.2503 31.758	+.0002/-.0003 +.0005/-.0008	1 1/4-12	3,450 390	1,050	3.19 1.47
CFH 2 3/4 B	CFH 2 3/4 SB											
CCFH 2 3/4	CCFH 2 3/4 S					N/A						
CCFH 2 3/4 B	CCFH 2 3/4 SB											

For positive clamping, use housing thickness equal to G dimension =.010".
Clamping torque is based on dry threads. If threads are lubricated, use half of value shown.
Hex wrench size for "Broached" version is located in the wrench size chart on page B-156.

McGILL® Inch Cam Follower Bearings

Basic Construction Type: Stud Type Crowned / Cylindrical Outside Diameter

Rolling Elements: Full Complement Needle Roller

Bearing Material: Bearing Quality Steel

Seal Type: LUBRI-DISC®

Lubrication: Lithium Soap Grease NLGI #2

System Configuration: Concentric / Eccentric / Heavy Stud

Mounting Feature: Slot / Hex Hole

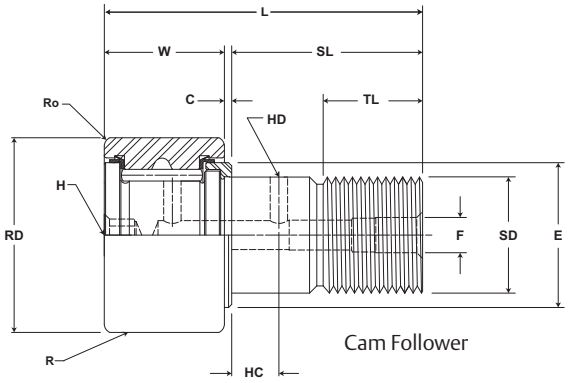

CF, CFE, CFH

Part No. W/O Seals	Part No. With LUBRI-DISC Seals	RD Roller Diameter inch mm Nom.	RD Roller Diameter inch mm Tol.	W Roller Width inch mm Nom.	W Roller Width inch mm Tol.	SD Stud Diameter inch mm Nom.	SD Stud Diameter inch mm Tol.	SL Stud Length inch mm (Ref)	C Endplate Extension inch mm (Ref)	TL Min Thread Length inch mm (Ref)	L Length Overall inch mm (Ref)	R Crown Prefix CCF-XX inch mm Radius (Ref)	ECC Eccentric Base Modifier CFE-XX inch mm (Ref)	G Eccentric Base Modifier CFE-XX inch mm +0/-.010	BD Eccentric Base Modifier CFE-XX inch mm ±.001	Track Roller Dynamic Rating lb/N	Track Roller Static Rating lb/N
CF 3	CF 3 S	3.000	+0/-.001	1.750	+0 / -.005	1.250	+.001/-0	2.50	.031	1.25	4.28	Cylindrical	N/A	N/A	N/A	15,720	24,910
CF 3 B	CF 3 SB	76.20	+0/-.03	44.45	+0 / -.13	31.75	+.03/-0	63.5	.8	31.75	108.7	30				69,923	110,800
CCF 3	CCF 3 S											762					24,910
CCF 3 B	CCF 3 SB																110,800
CFE 3	CFE 3 S	3.000	+0/-.001	1.750	+0 / -.005	1.250	+.001/-0	2.50	.031	1.25	4.28	Cylindrical	.060	1.250	1.750		
CFE 3 B	CFE 3 SB	76.20	+0/-.03	44.45	+0 / -.13	31.75	+.03/-0	63.5	.8	31.75	108.7	30	.52	31.75	44.45		
CCFE 3	CCFE 3 S											762					
CCFE 3 B	CCFE 3 SB																
CFH 3	CFH 3 S	3.000	+0/-.001	1.750	+0 / -.005	1.500	+.001/-0	2.50	.031	1.25	4.28	Cylindrical	N/A	N/A	N/A	15,720	49,820
CFH 3 B	CFH 3 SB	76.20	+0/-.03	44.45	+0 / -.13	38.10	+.03/-0	63.5	.8	31.75	108.7	30				69,923	221,599
CCFH 3	CCFH 3 S											762					
CCFH 3 B	CCFH 3 SB																
CF 3 1/4	CF 3 1/4 S	3.250	+0/-.001	1.750	+0 / -.005	1.250	+.001/-0	2.50	.031	1.25	4.28	Cylindrical	N/A	N/A	N/A	15,720	24,910
CF 3 1/4 B	CF 3 1/4 SB	82.55	+0/-.03	44.45	+0 / -.13	31.75	+.03/-0	63.5	.8	31.75	108.7	30				69,923	110,800
CCF 3 1/4	CCF 3 1/4 S											762					
CCF 3 1/4 B	CCF 3 1/4 SB																
CFE 3 1/4	CFE 3 1/4 S	3.250	+0/-.001	1.750	+0 / -.005	1.250	+.001/-0	2.50	.031	1.25	4.28	Cylindrical	.060	1.250	1.750		
CFE 3 1/4 B	CFE 3 1/4 SB	82.55	+0/-.03	44.45	+0 / -.13	31.75	+.03/-0	63.5	.8	31.75	108.7	30	.52	31.75	44.45		
CCFE 3 1/4	CCFE 3 1/4 S											762					
CCFE 3 1/4 B	CCFE 3 1/4 SB																
CFH 3 1/4	CFH 3 1/4 S	3.250	+0/-.001	1.750	+0 / -.005	1.500	+.001/-0	2.50	.031	1.25	4.28	Cylindrical	N/A	N/A	N/A	15,720	49,820
CFH 3 1/4 B	CFH 3 1/4 SB	82.55	+0/-.03	44.45	+0 / -.13	38.10	+.03/-0	63.5	.8	31.75	108.7	30				69,923	221,599
CCFH 3 1/4	CCFH 3 1/4 S											762					
CCFH 3 1/4 B	CCFH 3 1/4 SB																

Metric dimensions for reference only.
Hex wrench size for "Broached" version is located in the wrench size chart on page B-156.

Not all parts are available from stock. Please contact customer service for availability (800) 626-2120.
For more information on bearing capabilities outside of our standard offering, please contact Application Engineering (800) 626-2093.

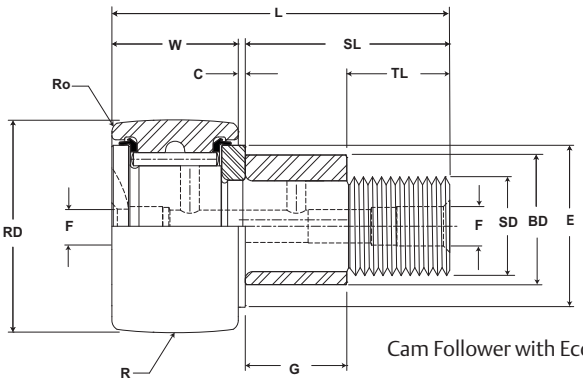

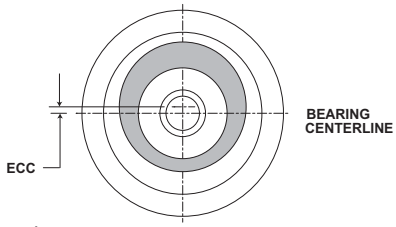

Cam Follower with Eccentric Bushing

CF, CFE, CFH

Part No.		HC	HD	F	E	Ro	HBD		Thread Type	Clamping Torque	Limiting Speed (Grease)	WT
W/O Seals	With LUBRI-DISC Seals	Hole Center	Radial Hole Diameter	Axial Hole Dia or Fitting	Min Boss Diameter	Outer Corner	Housing Bore Diameter					Bearing Weight
		inch mm			inch mm		inch mm			in-lb Nm	RPM	lb kg
		(Ref)	(Ref)	(Ref)	(Ref)	(Ref)	Nom.	Tol.				
CF 3	CF 3 S	.625 16	.125 3	.25 * 6	2.125 53.98	.125 3.18	1.2503 31.758	+.0002/-.0003 +.0005/-.0008	1 1/4-12	3,450 390	950	4.20 1.91
CF 3 B	CF 3 SB					N/A						
CCF 3	CCF 3 S											
CCF 3 B	CCF 3 SB											
CFE 3	CFE 3 S	.625 16	.125 3	.25 * 6		.125 3.18	1.753 44.52	+.001/-.001 +.025/-.025				
CFE 3 B	CFE 3 SB					N/A						
CCFE 3	CCFE 3 S											
CCFE 3 B	CCFE 3 SB											
CFH 3	CFH 3 S	.625 16	.125 3	.25 * 6	2.125 53.98	.125 3.18	1.5003 38.108	+.0002/-.0003 +.0005/-.0008	1 1/2-12	5,000 565	950	4.56 2.07
CFH 3 B	CFH 3 SB					N/A						
CCFH 3	CCFH 3 S											
CCFH 3 B	CCFH 3 SB											
CF 3 1/4	CF 3 1/4 S	.625 16	.125 3	.25 * 6	2.125 53.98	.125 3.18	1.2503 31.758	+.0002/-.0003 +.0005/-.0008	1 1/4-12	3,450 390	880	4.81 2.18
CF 3 1/4 B	CF 3 1/4 SB					N/A						
CCF 3 1/4	CCF 3 1/4 S											
CCF 3 1/4 B	CCF 3 1/4 SB											
CFE 3 1/4	CFE 3 1/4 S	.625 16	.125 3	.25 * 6		.125 3.18	1.753 44.52	+.001/-.001 +.025/-.025				
CFE 3 1/4 B	CFE 3 1/4 SB					N/A						
CCFE 3 1/4	CCFE 3 1/4 S											
CCFE 3 1/4 B	CCFE 3 1/4 SB											
CFH 3 1/4	CFH 3 1/4 S	.625 16	.125 3	.25 * 6	2.125 53.98	.125 3.18	1.5003 38.108	+.0002/-.0003 +.0005/-.0008	1 1/2-12	5,000 565	880	5.19 2.35
CFH 3 1/4 B	CFH 3 1/4 SB					N/A						
CCFH 3 1/4	CCFH 3 1/4 S											
CCFH 3 1/4 B	CCFH 3 1/4 SB											

* Lubrication hole (F) at bottom of hex hole and 1/4 inch straight drive fitting will ball check supplied but not installed.
For positive clamping, use housing thickness equal to G dimension =.010".
Clamping torque is based on dry threads. If threads are lubricated, use half of value shown.
Hex wrench size for "Broached" version is located in the wrench size chart on page B-156.

McGILL® Inch Cam Follower Bearings

Basic Construction Type: Stud Type Crowned / Cylindrical Outside Diameter

Rolling Elements: Full Complement Needle Roller

Bearing Material: Bearing Quality Steel

Seal Type: LUBRI-DISC®

Lubrication: Lithium Soap Grease NLGI #2

System Configuration: Concentric / Eccentric / Heavy Stud

Mounting Feature: Slot / Hex Hole

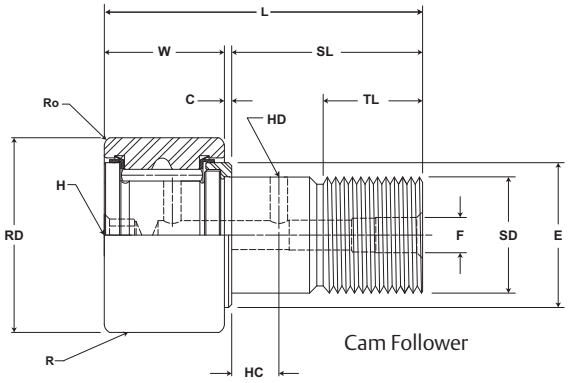

CF, CFE, CFH

Part No.		RD		W		SD		SL	C	TL	L	R	ECC	G	BD	Track Roller Dynamic Rating	Track Roller Static Rating
W/O Seals	With LUBRI-DISC Seals	Roller Diameter		Roller Width		Stud Diameter		Stud Length	Endplate Extension	Min Thread Length	Length Overall	Crown Prefix CCF-XX	Eccentric Base Modifier CFE-XX				
		inch mm		inch mm		inch mm		inch mm		inch mm		inch mm	inch mm			lb/N	
		Nom.	Tol.	Nom.	Tol.	Nom.	Tol.	(Ref)	(Ref)	(Ref)	(Ref)	Radius (Ref)	(Ref)	+0/-.010	±.001		
CF 3 1/2 CF 3 1/2 B CCF 3 1/2 CCF 3 1/2 B	CF 3 1/2 S CF 3 1/2 SB CCF 3 1/2 S CCF 3 1/2 SB	3.500 88.90	+0/-.001 +0/-.03	2.000 50.80	+0 / -.005 +0 / -.13	1.375 34.93	+.001/-0 +.03/-0	2.75 69.9	.031 .8	1.375 34.93	4.78 121.4	Cylindrical 30 762	N/A	N/A	N/A	22,800 101,414	31,625 140,668
CFE 3 1/2 CFE 3 1/2 B CCFE 3 1/2 CCFE 3 1/2 B	CFE 3 1/2 S CFE 3 1/2 SB CCFE 3 1/2 S CCFE 3 1/2 SB	3.500 88.90	+0/-.001 +0/-.03	2.000 50.80	+0 / -.005 +0 / -.13	1.375 34.93	+.001/-0 +.03/-0	2.75 69.9	.031 .8	1.375 34.93	4.78 121.4	Cylindrical 30 762	.060 .52	1.375 34.93	1.812 46.02		
CFH 3 1/2 CFH 3 1/2 B CCFH 3 1/2 CCFH 3 1/2 B	CFH 3 1/2 S CFH 3 1/2 SB CCFH 3 1/2 S CCFH 3 1/2 SB	3.500 88.90	+0/-.001 +0/-.03	2.000 50.80	+0 / -.005 +0 / -.13	1.750 44.45	+.001/-0 +.03/-0	2.75 69.9	.031 .8	1.375 34.93	4.78 121.4	Cylindrical 30 762	N/A	N/A	N/A	22,800 101,414	63,250 281,336
CF 4 CF 4 B CCF 4 CCF 4 B	CF 4 S CF 4 SB CCF 4 S CCF 4 SB	4.000 101.60	+0/-.001 +0/-.03	2.250 57.15	+0 / -.005 +0 / -.13	1.500 38.10	+.001/-0 +.03/-0	3.50 88.9	.031 .8	1.50 38.1	5.78 146.8	Cylindrical 30 762	N/A	N/A	N/A	22,800 101,414	44,770 199,137
CFE 4 CFE 4 B CCFE 4 CCFE 4 B	CFE 4 S CFE 4 SB CCFE 4 S CCFE 4 SB	4.000 101.60	+0/-.001 +0/-.03	2.250 57.15	+0 / -.005 +0 / -.13	1.500 38.10	+.001/-0 +.03/-0	3.50 88.9	.031 .8	1.50 38.1	5.78 146.8	Cylindrical 30 762	.060 .52	2.000 50.80	2.000 50.80		
CFH 4 CFH 4 B CCFH 4 CCFH 4 B	CFH 4 S CFH 4 SB CCFH 4 S CCFH 4 SB	4.000 101.60	+0/-.001 +0/-.03	2.250 57.15	+0 / -.005 +0 / -.13	2.000 50.80	+.001/-0 +.03/-0	3.50 88.9	.031 .8	1.50 38.1	5.78 146.8	Cylindrical 30 762	N/A	N/A	N/A	29,985 133,373	89,540 398,274

Metric dimensions for reference only.
Hex wrench size for "Broached" version is located in the wrench size chart on page B-156.

Not all parts are available from stock. Please contact customer service for availability (800) 626-2120.
For more information on bearing capabilities outside of our standard offering, please contact Application Engineering (800) 626-2093.

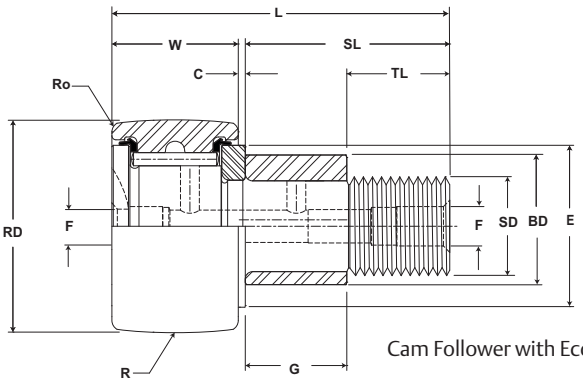

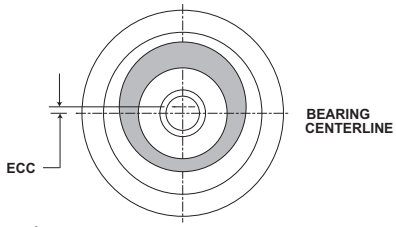

Cam Follower with Eccentric Bushing

CF, CFE, CFH

Part No.		HC	HD	F	E	Ro	HBD		Thread Type	Clamping Torque	Limiting Speed (Grease)	WT
W/O Seals	With LUBRI-DISC Seals	Hole Center	Radial Hole Diameter	Axial Hole Dia or Fitting	Min Boss Diameter	Outer Corner	Housing Bore Diameter					Bearing Weight
		inch mm			inch mm		inch mm			in-lb Nm	RPM	lb kg
		(Ref)	(Ref)	(Ref)	(Ref)	(Ref)	Nom.	Tol.				
CF 3 1/2	CF 3 1/2 S	.6875 17	.125 3	.25 * 6	2.438 61.91	.125 3.18	1.3753 34.933	+.0002/-.0003 +.0005/-.0008	1 3/8-12	4,200 475	820	6.42 2.91
CF 3 1/2 B	CF 3 1/2 SB											
CCF 3 1/2	CCF 3 1/2 S					N/A						
CCF 3 1/2 B	CCF 3 1/2 SB											
CFE 3 1/2	CFE 3 1/2 S	.6875 17	.125 3	.25 * 6		.125 3.18	1.815 46.10	+.001/-.001 +.025/-.025				
CFE 3 1/2 B	CFE 3 1/2 SB											
CCFE 3 1/2	CCFE 3 1/2 S					N/A						
CCFE 3 1/2 B	CCFE 3 1/2 SB											
CFH 3 1/2	CFH 3 1/2 S	.6875 17	.125 3	.25 * 6	2.438 61.91	.125 3.18	1.7503 44.458	+.0002/-.0003 +.0005/-.0008	1 3/4-12	5,000 565	820	7.01 3.18
CFH 3 1/2 B	CFH 3 1/2 SB											
CCFH 3 1/2	CCFH 3 1/2 S					N/A						
CCFH 3 1/2 B	CCFH 3 1/2 SB											
CF 4	CF 4 S	.75 19	.125 3	.25 * 6	2.797 71.04	.125 3.18	1.5003 38.108	+.0002/-.0003 +.0005/-.0008	1 1/2-12	5,000 565	700	9.46 4.29
CF 4 B	CF 4 SB											
CCF 4	CCF 4 S					N/A						
CCF 4 B	CCF 4 SB											
CFE 4	CFE 4 S	.75 19	.125 3	.25 * 6		.125 3.18	2.002 50.85	+.001/-.001 +.025/-.025				
CFE 4 B	CFE 4 SB											
CCFE 4	CCFE 4 S					N/A						
CCFE 4 B	CCFE 4 SB											
CFH 4	CFH 4 S	.75 19	.125 3	.25 * 6	2.797 71.04	.125 3.18	2.0003 50.808	+.0002/-.0003 +.0005/-.0008	2-12	5,000 565	700	10.83 4.91
CFH 4 B	CFH 4 SB											
CCFH 4	CCFH 4 S					N/A						
CCFH 4 B	CCFH 4 SB											

* Lubrication hole (F) at bottom of hex hole and 1/4 inch straight drive fitting will ball check supplied but not installed.
For positive clamping, use housing thickness equal to G dimension =.010".
Clamping torque is based on dry threads. If threads are lubricated, use half of value shown.
Hex wrench size for "Broached" version is located in the wrench size chart on page B-156.

McGILL® Inch Cam Follower Bearings

Basic Construction Type: Stud Type Crowned / Cylindrical Outside Diameter

Rolling Elements: Full Complement Needle Roller

Bearing Material: Bearing Quality Steel

Seal Type: LUBRI-DISC®

Lubrication: Lithium Soap Grease NLGI #2

System Configuration: Concentric / Eccentric / Heavy Stud

Mounting Feature: Slot / Hex Hole

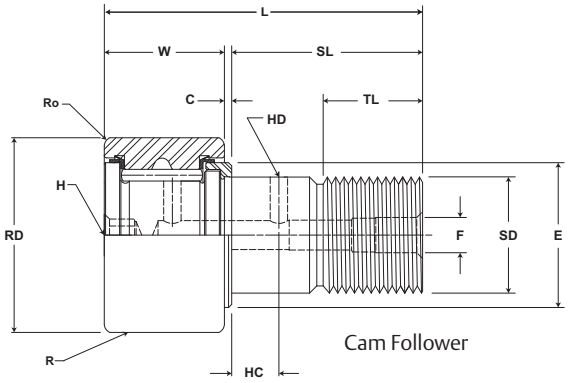

Cam Follower

CF, CFE, CFH

Part No.		RD		W		SD		SL	C	TL	L	R	ECC	G	BD	Track Roller Dynamic Rating	Track Roller Static Rating
W/O Seals	With LUBRI-DISC Seals	Roller Diameter		Roller Width		Stud Diameter		Stud Length	Endplate Extension	Min Thread Length	Length Overall	Crown Prefix CCF-XX	Eccentric Base Modifier CFE-XX				
		inch mm		inch mm		inch mm		inch mm		inch mm		inch mm	inch mm			lb/N	
		Nom.	Tol.	Nom.	Tol.	Nom.	Tol.	(Ref)	(Ref)	(Ref)	(Ref)	Radius (Ref)	(Ref)	+0/-.010	±.001		
-	CF 5 SB CCF 5 SB	5.000 127.00	+0/-.001 +0/-.03	2.750 69.85	+0 / -.005 +0 / -.13	2.000 50.80	+.001/-0 +.03/-0	5.06 128.6	.062 1.57	2.563 65.1	7.88 200.0	Cylindrical 48 1,219	N/A	N/A	N/A	46,575 207,166	67,950 302,242
	CFH 5 SB CCFH 5 SB	5.000 127.00	+0/-.001 +0/-.03	2.750 69.85	+0 / -.005 +0 / -.13	2.500 63.50	+.001/-0 +.03/-0	5.06 128.6	.062 1.57	2.563 65.1	7.88 200.0	Cylindrical 48 1,219	N/A	N/A	N/A	46,575 207,166	135,900 604,483
-	CF 6 SB CCF 6 SB	6.000 152.40	+0/-.001 +0/-.03	3.250 82.55	+0 / -.005 +0 / -.13	2.500 63.50	+.001/-0 +.03/-0	6.00 152.4	.062 1.57	3.00 76.2	9.31 236.5	Cylindrical 56 1,422	N/A	N/A	N/A	60,000 266,880	80,450 357,842
	CFH 6 SB CCFH 6 SB	6.000 152.40	+0/-.001 +0/-.03	3.250 82.55	+0 / -.005 +0 / -.13	2.500 63.50	+.001/-0 +.03/-0	6.00 152.4	.062 1.57	3.00 76.2	9.31 236.5	Cylindrical 56 1,422	N/A	N/A	N/A	60,000 266,880	160,900 715,683
--	CF 7 SB CCF 7 SB	7.000 177.80	+0/-.001 +0/-.03	3.750 95.25	+0 / -.005 +0 / -.13	3.000 76.20	+.001/-0 +.03/-0	7.69 195.3	.062 1.57	4.125 104.77	11.50 292.1	Cylindrical 60 1,524	N/A	N/A	N/A	75,380 335,290	106,930 475,625
	CFH 7 SB CCFH 7 SB	7.000 177.80	+0/-.001 +0/-.03	3.750 95.25	+0 / -.005 +0 / -.13	3.000 76.20	+.001/-0 +.03/-0	7.69 195.3	.062 1.57	4.125 104.77	11.50 292.1	Cylindrical 60 1,524	N/A	N/A	N/A	75,380 335,290	213,860 951,249
-	CF 8 SB CCF 8 SB	8.000 203.20	*	4.250 107.95	*	3.250 82.55	+.001/-0 +.03/-0	8.50 215.9	.125 3.175	4.25 107.95	12.81 325.4	Cylindrical 40 1,016	N/A	N/A	N/A	92,200 410,106	144,100 640,957
-	CF 9 SB CCF 9 SB	9.000 228.60	*	4.750 120.65	*	3.750 95.25	+.001/-0 +.03/-0	9.50 241.3	.125 3.175	4.75 120.65	14.31 363.5	Cylindrical 40 1,016	N/A	N/A	N/A	113,260 503,780	183,430 815,897
-	CF 10 SB CCF 10 SB	10.000 254.00	*	5.250 133.35	*	4.250 107.95	+.001/-0 +.03/-0	10.00 254.0	.125 3.175	4.75 120.65	15.31 388.9	Cylindrical 40 1,016	N/A	N/A	N/A	131,545 585,112	215,565 958,833

Metric dimensions for reference only.
*Standard tolerances do not apply. Consult Application Engineering.
Hex wrench size for "Broached" version is located in the wrench size chart on page B-156.

Not all parts are available from stock. Please contact customer service for availability (800) 626-2120.
For more information on bearing capabilities outside of our standard offering, please contact Application Engineering (800) 626-2093.

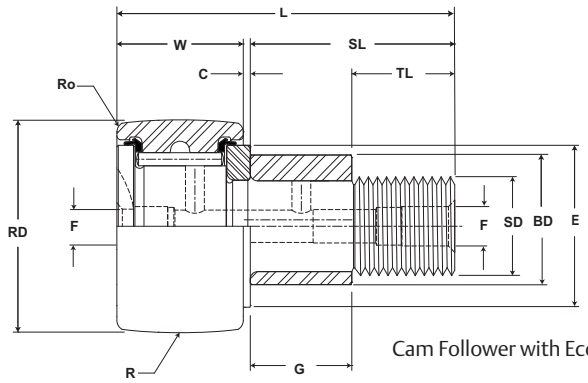

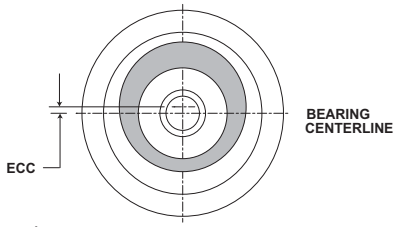

Cam Follower with Eccentric Bushing

CF, CFE, CFH

Part No.		HC	HD	F	E	Ro	HBD		Thread Type	Clamping Torque	Limiting Speed (Grease)	WT
W/O Seals	With LUBRI-DISC Seals	Hole Center	Radial Hole Diameter	Axial Hole Dia or Fitting	Min Boss Diameter	Outer Corner	Housing Bore Diameter					Bearing Weight
		inch mm			inch mm		inch mm			in-lb Nm	RPM	lb kg
		(Ref)	(Ref)	(Ref)	(Ref)	(Ref)	Nom.	Tol.				
-	CF 5 S CCF 5 S	.875 22	.1875 5	1/4" NPT	3.563 90.49	.125 3.18	2.0003 50.808	+.0002/-.0003 +.0005/-.0008	2-12	5,000 565	575	19.60 8.89
	CFH 5 S CCFH 5 S	.875 22	.1875 5	1/4" NPT	3.563 90.49	.125 3.18	2.5030 63.576	+.0002/-.0003 +.0005/-.0008	2 1/2-12	5,000 565	575	22.10 10.02
-	CF 6 S CCF 6 S	1.00 25	.1875 5	1/4" NPT	4.469 113.51	.125 3.18	2.5030 63.576	+.0002/-.0003 +.0005/-.0008	2 1/2-12	5,000 565	475	32.73 14.85
	CFH 6 S CCFH 6 S	1.00 25	.1875 5	1/4" NPT	4.469 113.51	.125 3.18	3.0003 76.208	+.0002/-.0003 +.0005/-.0008	3-12	5,000 565	475	36.41 16.52
--	CF 7 S CCF 7 S	1.25 32	.1875 5	1/4" NPT	5.188 131.76	.125 3.18	3.0003 76.208	+.0002/-.0003 +.0005/-.0008	3-12	5,000 565	400	54.73 24.83
	CFH 7 S CCFH 7 S	1.25 32	.1875 5	1/4" NPT	5.188 131.76	.125 3.18	3.5003 88.908	+.0002/-.0003 +.0005/-.0008	3 1/2-4	5,000 565	400	68.03 30.86
-	CF 8 S CCF 8 S	-	-	1/4" NPT	4.375 111.13	.219 5.56	3.2503 82.558	+.0002/-.0003 +.0005/-.0008	3 1/4-4	5,000 565	350	79.80 36.19
-	CF 9 S CCF 9 S	-	-	1/4" NPT	5.063 128.59	.250 6.35	3.7503 95.258	+.0002/-.0003 +.0005/-.0008	3 1/2-4	5,000 565	300	111.60 50.62
-	CF 10 S CCF 10 S	-	-	1/4" NPT	5.469 138.91	.281 7.14	4.2503 107.958	+.0002/-.0003 +.0005/-.0008	3 1/2-4	5,000 565	275	148.20 67.22

For positive clamping, use housing thickness equal to G dimension =.010".
Clamping torque based on dry threads. For wet (lubricated) threads, use half of value shown.
Hex wrench size for "Broached" version is located in the wrench size chart on page B-156.

McGILL® Inch Cam Follower Bearings

Basic Construction Type: Yoke Type Crowned/ Cylindrical Outside Diameter

Rolling Elements: Full Complement/Needle Roller

Bearing Material: Bearing Quality Steel

Seal Type: LUBRI-DISC®

Lubrication: Lithium Soap Grease NLGI #2

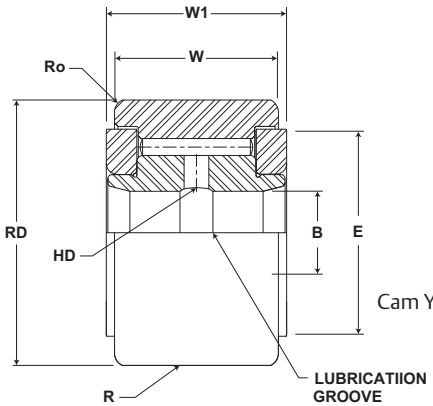

Cam Yoke Roller

CYR

Part No.		RD		W		B		W1		R	Track Roller Dynamic Rating	Track Roller Static Rating
W/O Seals	With LUBRI-DISC Seals	Roller Diameter		Roller Width		Bore Diameter		Overall Width		Crown Prefix CCYR-XX		
		inch mm		inch mm		inch mm		inch mm		inch mm	lb/N	lb/N
		Nom.	Tol.	Nom.	Tol.	Nom.	Tol.	Nom.	Tol.	Radius		
CYR 3/4	CYR 3/4 S	.750 19.05	+0/-.001 +0/-.03	.500 12.70	+0/-.005 +0/-.13	.250 6.35	+.0002/-.0004 +.0005/-.0010	.5625 14.28	+.005/-.01 +0.13/-0.25	Cylindrical	1,660 7,384	4,130 18,370
	CCYR 3/4 S									10 254		
CYR 7/8	CYR 7/8 S	.875 22.23	+0/-.001 +0/-.03	.500 12.70	+0/-.005 +0/-.13	.250 6.35	+.0002/-.0004 +.0005/-.0010	.5625 14.28	+.005/-.01 +0.13/-0.25	Cylindrical	1,660 7,384	4,130 18,370
	CCYR 7/8 S									10 254		
CYR 1	CYR 1 S	1.000 25.40	+0/-.001 +0/-.03	.625 15.88	+0/-.005 +0/-.13	.3125 7.94	+.0002/-.0004 +.0005/-.0010	.6875 17.46	+.005/-.01 +0.13/-0.25	Cylindrical	2,225 9,897	6,120 27,222
	CCYR 1 S									12 305		
CYR 1 1/8	CYR 1 1/8 S	1.125 28.58	+0/-.001 +0/-.03	.625 15.88	+0/-.005 +0/-.13	.3125 7.94	+.0002/-.0004 +.0005/-.0010	.6875 17.46	+.005/-.01 +0.13/-0.25	Cylindrical	2,225 9,897	6,120 27,222
	CCYR 1 1/8 S									12 305		
CYR 1 1/4	CYR 1 1/4 S	1.250 31.75	+0/-.001 +0/-.03	.750 19.05	+0/-.005 +0/-.13	.375 9.53	+.0002/-.0004 +.0005/-.0010	.8125 20.64	+.005/-.01 +0.13/-0.25	Cylindrical	3,930 17,481	8,500 37,808
	CCYR 1 1/4 S									14 356		
CYR 1 3/8	CYR 1 3/8 S	1.375 34.93	+0/-.001 +0/-.03	.750 19.05	+0/-.005 +0/-.13	.375 9.53	+.0002/-.0004 +.0005/-.0010	.8125 20.64	+.005/-.01 +0.13/-0.25	Cylindrical	3,930 17,481	8,500 37,808
	CCYR 1 3/8 S									14 356		
CYR 1 1/2	CYR 1 1/2 S	1.500 38.10	+0/-.001 +0/-.03	.875 22.23	+0/-.005 +0/-.13	.4375 11.11	+.0002/-.0004 +.0005/-.0010	.9375 23.81	+.005/-.01 +0.13/-0.25	Cylindrical	4,840 21,528	11,280 50,173
	CCYR 1 1/2 S									20 508		
CYR 1 5/8	CYR 1 5/8 S	1.625 41.28	+0/-.001 +0/-.03	.875 22.23	+0/-.005 +0/-.13	.4375 11.11	+.0002/-.0004 +.0005/-.0010	.9375 23.81	+.005/-.01 +0.13/-0.25	Cylindrical	4,840 21,528	11,280 50,173
	CCYR 1 5/8 S									20 508		
CYR 1 3/4	CYR 1 3/4 S	1.750 44.45	+0/-.001 +0/-.03	1.000 25.40	+0/-.005 +0/-.13	.500 12.70	+.0002/-.0004 +.0005/-.0010	1.0625 26.98	+.005/-.01 +0.13/-0.25	Cylindrical	6,385 28,400	115,840 515,256
	CCYR 1 3/4 S									20 508		

Metric dimensions for reference only.
Not all parts are available from stock. Please contact customer service for availability (800) 626-2120.
For more information on bearing capabilities outside of our standard offering, please contact Application Engineering (800) 626-2093.

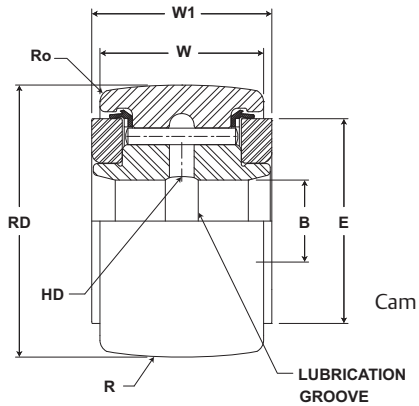

Cam Yoke Roller with Seals

CYR

Part No.		HD	E	Ro	Recommended Shaft Diameters						Limiting Speed	WT
W/O Seals	With LUBRI-DISC Seals	Hole Diameter	Min. Clamping Diameter	Outer Corner	Push Fit		Drive Fit		Press Fit			Bearing Weight
		inch mm			inch mm		inch mm		inch mm		RPM	lb kg
		(Ref)	(Ref)	(Ref)	Nom	Tol	Nom	Tol	Nom	Tol		
CYR 3/4	CYR 3/4 S	.09 2.4	.61 15.5	.02 .4	.2495 6.337	±.0002 ±.005	.2501 6.353	±.0002 ±.005	.2503 6.357	±.0002 ±.005	6,400	.06 .03
	CCYR 3/4 S			N/A								
CYR 7/8	CYR 7/8 S	.09 2.4	.61 15.5	.02 .4	.2495 6.337	±.0002 ±.005	.2501 6.353	±.0002 ±.005	.2503 6.357	±.0002 ±.005	5,400	.08 .04
	CCYR 7/8 S			N/A								
CYR 1	CYR 1 S	.09 2.4	.78 19.8	.03 .8	.3120 7.925	±.0002 ±.005	.3126 7.940	±.0002 ±.005	.3128 7.945	±.0002 ±.005	4,800	.15 .07
	CCYR 1 S			N/A								
CYR 1 1/8	CYR 1 1/8 S	.09 2.4	.78 19.8	.03 .8	.3120 7.925	±.0002 ±.005	.3126 7.940	±.0002 ±.005	.3128 7.945	±.0002 ±.005	3,400	.17 .08
	CCYR 1 1/8 S			N/A								
CYR 1 1/4	CYR 1 1/4 S	.09 2.4	.98 25.0	.03 .8	.3745 9.512	±.0002 ±.005	.3751 9.527	±.0002 ±.005	.3753 9.532	±.0002 ±.005	3,100	.24 .11
	CCYR 1 1/4 S			N/A								
CYR 1 3/8	CYR 1 3/8 S	.09 2.4	.98 25.0	.05 1.2	.3745 9.512	±.0002 ±.005	.3751 9.527	±.0002 ±.005	.3753 9.532	±.0002 ±.005	2,800	.30 .14
	CCYR 1 3/8 S			N/A								
CYR 1 1/2	CYR 1 1/2 S	.09 2.4	1.09 27.8	.06 1.6	.4370 11.100	±.0002 ±.005	.4376 11.115	±.0002 ±.005	.4378 11.120	±.0002 ±.005	2,500	.41 .19
	CCYR 1 1/2 S			N/A								
CYR 1 5/8	CYR 1 5/8 S	.09 2.4	1.09 27.8	.06 1.6	.4370 11.100	±.0002 ±.005	.4376 11.115	±.0002 ±.005	.4378 11.120	±.0002 ±.005	2,350	.50 .23
	CCYR 1 5/8 S			N/A								
CYR 1 3/4	CYR 1 3/4 S	.09 2.4	1.25 31.8	.06 1.6	.4995 12.687	±.0002 ±.005	.5001 12.703	±.0002 ±.005	.5005 12.713	±.0002 ±.005	2,200	.64 .29
	CCYR 1 3/4 S			N/A								

McGILL® Inch Cam Follower Bearings

Basic Construction Type: Yoke Type Crowned/ Cylindrical Outside Diameter

Rolling Elements: Full Complement/Needle Roller

Bearing Material: Bearing Quality Steel

Seal Type: LUBRI-DISC®

Lubrication: Lithium Soap Grease NLGI #2

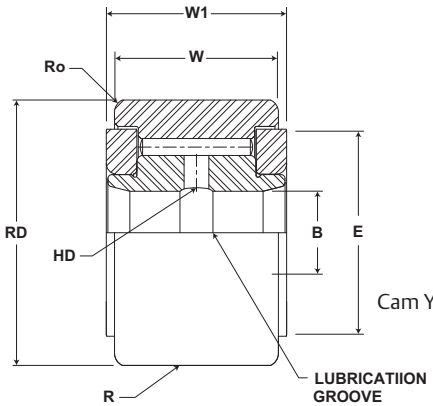

Cam Yoke Roller

CYR

Part No.		RD		W		B		W1		R	Track Roller Dynamic Rating	Track Roller Static Rating
W/O Seals	With LUBRI-DISC Seals	Roller Diameter		Roller Width		Bore Diameter		Overall Width		Crown Prefix CCYR-XX		
		inch mm		inch mm		inch mm		inch mm		inch mm	lb/N	lb/N
		Nom.	Tol.	Nom.	Tol.	Nom.	Tol.	Nom.	Tol.	Radius		
CYR 1 7/8	CYR 1 7/8 S	1.875 47.63	+0/-.001 +0/-.03	1.000 25.40	+0/-.005 +0/-.13	.500 12.70	+.0001/-.0005 +.0003/-.0013	1.0625 26.98	+.005/-.01 +0.13/-0.25	Cylindrical	6,385 28,400	115,840 515,256
	CCYR 1 7/8 S									20 508		
CYR 2	CYR 2 S	2.000 50.80	+0/-.001 +0/-.03	1.250 31.75	+0/-.005 +0/-.13	.625 15.88	+.0001/-.0005 +.0003/-.0013	1.3125 33.34	+.005/-.01 +0.13/-0.25	Cylindrical	8,090 35,984	21,140 94,031
	CCYR 2 S									24 610		
CYR 2 1/4	CYR 2 1/4 S	2.250 57.15	+0/-.001 +0/-.03	1.250 31.75	+0/-.005 +0/-.13	.625 15.88	+.0001/-.0005 +.0003/-.0013	1.3125 33.34	+.005/-.01 +0.13/-0.25	Cylindrical	8,090 35,984	21,140 94,031
	CCYR 2 1/4 S									24 610		
CYR 2 1/2	CYR 2 1/2 S	2.500 63.50	+0/-.001 +0/-.03	1.500 38.10	+0/-.005 +0/-.13	.750 19.05	+.0001/-.0005 +.0003/-.0013	1.5625 39.69	+.005/-.01 +0.13/-0.25	Cylindrical	11,720 52,131	32,900 146,339
	CCYR 2 1/2 S									30 762		
CYR 2 3/4	CYR 2 3/4 S	2.750 69.85	+0/-.001 +0/-.03	1.500 38.10	+0/-.005 +0/-.13	.750 19.05	+.0001/-.0005 +.0003/-.0013	1.5625 39.69	+.005/-.01 +0.13/-0.25	Cylindrical	11,720 52,131	32,900 146,339
	CCYR 2 3/4 S									30 762		
CYR 3	CYR 3 S	3.000 76.20	+0/-.001 +0/-.03	1.750 44.45	+0/-.005 +0/-.13	1.000 25.40	+.0001/-.0005 +.0003/-.0013	1.8125 46.04	+.005/-.01 +0.13/-0.25	Cylindrical	15,720 69,923	49,820 221,599
	CCYR 3 S									30 762		
CYR 3 1/4	CYR 3 1/4 S	3.250 82.55	+0/-.001 +0/-.03	1.750 44.45	+0/-.005 +0/-.13	1.000 25.40	+.0001/-.0005 +.0003/-.0013	1.8125 46.04	+.005/-.01 +0.13/-0.25	Cylindrical	15,720 69,923	49,820 221,599
	CCYR 3 1/4 S									30 762		
CYR 3 1/2	CYR 3 1/2 S	3.500 88.90	+0/-.001 +0/-.03	2.000 50.80	+0/-.005 +0/-.13	1.125 28.58	+.0001/-.0005 +.0003/-.0013	2.0625 52.39	+.005/-.01 +0.13/-0.25	Cylindrical	22,800 101,414	63,250 281,336
	CCYR 3 1/2 S									30 762		
CYR 4	CYR 4 S	4.000 101.60	+0/-.001 +0/-.03	2.250 57.15	+0/-.005 +0/-.13	1.250 31.75	+.0001/-.0005 +.0003/-.0013	2.3125 58.74	+.005/-.01 +0.13/-0.25	Cylindrical	29,985 133,373	89,540 398,274
	CCYR 4 S									30 762		

Metric dimensions for reference only.
Not all parts are available from stock. Please contact customer service for availability (800) 626-2120.
For more information on bearing capabilities outside of our standard offering, please contact Application Engineering (800) 626-2093.

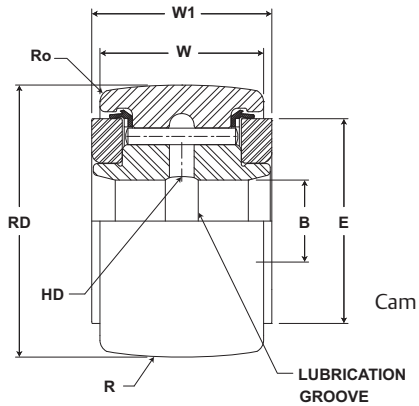

Cam Yoke Roller with Seals

CYR

Part No.		HD	E	Ro	Recommended Shaft Diameters						Limiting Speed	WT
W/O Seals	With LUBRI-DISC Seals	Hole Diameter	Min. Clamping Diameter	Outer Corner	Push Fit		Drive Fit		Press Fit			Bearing Weight
		inch mm			inch mm		inch mm		inch mm		RPM	lb kg
		(Ref)	(Ref)	(Ref)	Nom	Tol	Nom	Tol	Nom	Tol		
CYR 1 7/8	CYR 1 7/8 S	.09 2.4	1.25 31.8	.06 1.6	.4995 12.687	±.0002 ±.005	.5001 12.703	±.0002 ±.005	.5005 12.713	±.0002 ±.005	2,000	.80 .36
	CCYR 1 7/8 S			N/A								
CYR 2	CYR 2 S	.13 3.2	1.41 35.7	.09 2.4	.6245 15.862	±.0002 ±.005	.6245 15.862	±.0002 ±.005	.6245 15.862	±.0002 ±.005	1,400	1.05 .48
	CCYR 2 S			N/A								
CYR 2 1/4	CYR 2 1/4 S	.13 3.2	1.41 35.7	.09 2.4	.6245 15.862	±.0002 ±.005	.6251 15.877	±.0002 ±.005	.6255 15.887	±.0002 ±.005	1,300	1.32 .59
	CCYR 2 1/4 S			N/A								
CYR 2 1/2	CYR 2 1/2 S	.13 3.2	1.69 42.9	.09 2.4	.7495 19.037	±.0002 ±.005	.7501 19.053	±.0002 ±.005	.75015 19.063	±.0002 ±.005	1,100	1.80 .82
	CCYR 2 1/2 S			N/A								
CYR 2 3/4	CYR 2 3/4 S	.13 3.2	1.69 42.9	.09 2.4	.7495 19.037	±.0002 ±.005	.7501 19.053	±.0002 ±.005	.75015 19.063	±.0002 ±.005	1,050	2.25 1.02
	CCYR 2 3/4 S			N/A								
CYR 3	CYR 3 S	.13 3.2	2.13 54.0	.13 3.2	.9994 25.385	+.0002/-.0003 +.005/-.008	1.0002 25.405	+.0002/-.0003 +.005/-.008	1.0006 25.415	+.0002/-.0003 +.005/-.008	950	3.10 1.41
	CCYR 3 S			N/A								
CYR 3 1/4	CYR 3 1/4 S	.13 3.2	2.13 54.0	.13 3.2	.9994 25.385	+.0002/-.0003 +.005/-.008	1.0002 25.405	+.0002/-.0003 +.005/-.008	1.0006 25.415	+.0002/-.0003 +.005/-.008	880	3.62 1.64
	CCYR 3 1/4 S			N/A								
CYR 3 1/2	CYR 3 1/2 S	.13 3.2	2.44 61.9	.13 3.2	1.1244 28.560	+.0002/-.0003 +.005/-.008	1.1252 28.580	+.0002/-.0003 +.005/-.008	1.1256 28.590	+.0002/-.0003 +.005/-.008	820	4.95 2.25
	CCYR 3 1/2 S			N/A								
CYR 4	CYR 4 S	.13 3.2	2.80 71.0	.13 3.2	1.2494 31.735	+.0002/-.0003 +.005/-.008	1.2502 31.755	+.0002/-.0003 +.005/-.008	1.2506 31.765	+.0002/-.0003 +.005/-.008	700	7.05 3.19
	CCYR 4 S			N/A								

McGILL® Inch Cam Follower Bearings

Basic Construction Type: Yoke Type Crowned/ Cylindrical Outside Diameter

Rolling Elements: Full Complement/Needle Roller

Bearing Material: Bearing Quality Steel

Seal Type: LUBRI-DISC®

Lubrication: Lithium Soap Grease NLGI #2

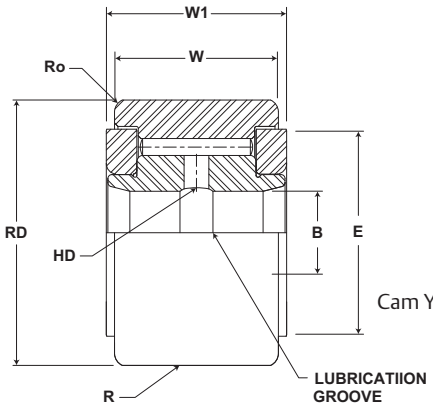

Cam Yoke Roller

CYR

Part No.		RD		W		B		W1		R	Track Roller Dynamic Rating	Track Roller Static Rating
W/O Seals	With LUBRI-DISC Seals	Roller Diameter		Roller Width		Bore Diameter		Overall Width		Crown Prefix CCYR-XX		
		inch mm		inch mm		inch mm		inch mm		inch mm	lb/N	lb/N
		Nom.	Tol.	Nom.	Tol.	Nom.	Tol.	Nom.	Tol.	Radius		
-	CYR 5 S	5.000 127.00	+0/-.001 +0/-.03	2.750 69.85	+0/-.005 +0/-.13	1.750 44.45	+.0001/-.0005 +.0003/-.0013	2.875 73.03	+.005/-.01 +0.13/-0.25	Cylindrical	46,575 207,166	135,900 604,483
	CCYR 5 S									48 1,219		
-	CYR 6 S	6.000 152.40	+0/-.001 +0/-.03	3.250 82.55	+0/-.005 +0/-.13	2.250 57.15	+.0001/-.0005 +.0003/-.0013	3.375 85.725	+.005/-.01 +0.13/-0.25	Cylindrical	60,000 266,880	160,900 715,683
	CCYR 6 S									56 1,422		
-	CYR 7 S	7.000 177.80	+0/-.001 +0/-.03	3.750 95.25	+0/-.005 +0/-.13	2.750 69.85	+.0001/-.0005 +.0003/-.0013	3.875 98.43	+.005/-.01 +0.13/-0.25	Cylindrical	75,380 335,290	213,860 951,249
	CCYR 7 S									60 1,524		
-	CYR 8 S	8.000 203.20	*	4.250 107.95	*	3.255 82.68	+.001/-0 +.025/-0	4.50 114.3	+.005/-.01 +0.13/-0.25	Cylindrical	92,200 410,106	288,200 1,281,914
	CCYR 8 S									40 1,016		
-	CYR 9 S	9.000 228.60	*	4.750 120.65	*	3.755 95.38	+.001/-0 +.025/-0	5.00 127.0	+.005/-.01 +0.13/-0.25	Cylindrical	113,260 503,780	366,850 1,631,749
	CCYR 9 S									40 1,016		
-	CYR 10 S	10.000 254.00	*	5.250 133.35	*	4.255 108.08	+.001/-0 +.025/-0	5.50 139.7	+.005/-.01 +0.13/-0.25	Cylindrical	131,545 585,112	431,130 1,917,666
	CCYR 10 S									40 1,016		

Metric dimensions for reference only.
Not all parts are available from stock. Please contact customer service for availability (800) 626-2120.
For more information on bearing capabilities outside of our standard offering, please contact Application Engineering (800) 626-2093.

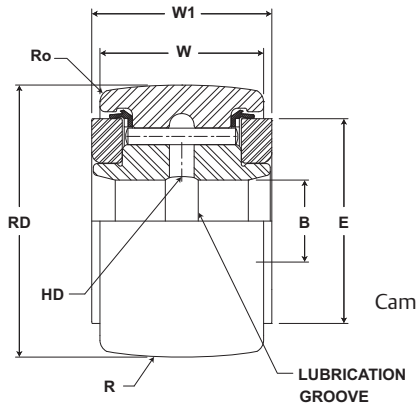

Cam Yoke Roller with Seals

CYR

Part No.		HD	E	Ro	Recommended Shaft Diameters						Limiting Speed	WT
W/O Seals	With LUBRI-DISC Seals	Hole Diameter	Min. Clamping Diameter	Outer Corner	Push Fit		Drive Fit		Press Fit			Bearing Weight
		inch mm			inch mm		inch mm		inch mm		RPM	lb kg
		(Ref)	(Ref)	(Ref)	Nom	Tol	Nom	Tol	Nom	Tol		
-	CYR 5 S	.19 4.8	3.56 90.5	.13 3.2	1.7494 44.435	+.0002/-.0003 +.005/-.008	1.7502 44.455	+.0002/-.0003 +.005/-.008	1.7506 44.465	+.0002/-.0003 +.005/-.008	575	14.34 6.59
	CCYR 5 S			N/A								
-	CYR 6 S	.19 4.8	4.47 113.5	.13 3.2	2.2494 57.135	+.0002/-.0003 +.005/-.008	2.2502 57.155	+.0002/-.0003 +.005/-.008	2.2506 57.165	+.0002/-.0003 +.005/-.008	475	20.16 9.14
	CCYR 6 S			N/A								
-	CYR 7 S	.19 4.8	5.19 131.8	.13 3.2	2.7494 69.835	+.0002/-.0003 +.005/-.008	2.7502 69.855	+.0002/-.0003 +.005/-.008	2.7506 69.865	+.0002/-.0003 +.005/-.008	400	32.43 14.71
	CCYR 7 S			N/A								
-	CYR 8 S	.25 6.4	4.38 111.1	.22 5.6	3.2545 82.664	±.0005 ±.0013	3.2560 82.702	±.0005 ±.0013	3.2565 82.715	±.0005 ±.0013	350	47.30 21.45
	CCYR 8 S			N/A								
-	CYR 9 S	.31 7.9	5.06 128.6	.25 6.4	3.7545 95.364	±.0005 ±.0013	3.7560 95.402	±.0005 ±.0013	3.7565 95.415	±.0005 ±.0013	300	65.70 29.80
	CCYR 9 S			N/A								
-	CYR 10 S	.38 9.5	5.47 138.9	.28 7.1	4.2545 108.064	±.0005 ±.0013	4.2560 108.102	±.0005 ±.0013	4.2565 108.115	±.0005 ±.0013	275	89.20 40.46
	CCYR 10 S			N/A								

McGILL® Inch Cam Follower Bearings

Basic Construction Type: Stud Type Crowned / Cylindrical Outside Diameter

Rolling Elements: Non-Metallic Bushing

Bearing Material: Bearing Quality Steel

Seal Type: LUBRI-DISC®

Lubrication: None - Self Lubricating Bushing

System Configuration: Concentric / Eccentric

Mounting Feature: Slot / Hex Hole

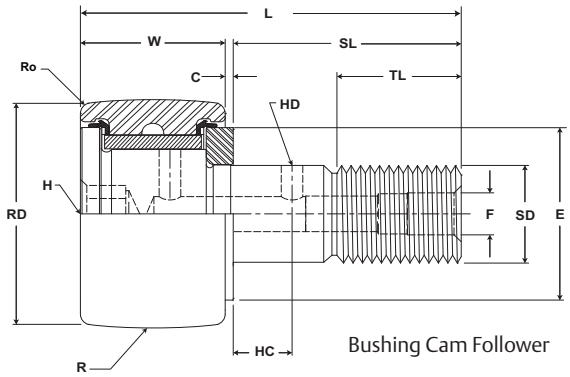

Bushing Cam Follower

BCF, BCFE

Part No.	RD		W		SD		SL	C	TL	L	R	ECC	G	BD	Track Roller Dynamic Rating	Track Roller Static Rating
With LUBRI-DISC Seals	Roller Diameter		Roller Width		Stud Diameter		Stud Length	Endplate Extension	Minimum Thread Length	Length Overall	Crown Prefix BCCF-XX	Eccentric Base Modifier BCFE-XX				
	inch mm		inch mm		inch mm		inch mm		inch mm		inch mm	inch mm			N/lb	N/lb
	Nom.	Tol.	Nom.	Tol.	Nom.	Tol.	(Ref)	(Ref)	(Ref)	(Ref)	Radius	(Ref)	+0/-.001 (+0/-.03)	± .001 (± .03)		
BCF 1/2 S BCF 1/2 SB BCCF 1/2 S BCCF 1/2 SB	.500 12.70	+0/-.001 +0/-.03	.375 9.53	+0 / -.005 +0 / -.13	.190 4.83	+.001/-0 +.03/-0	.625 15.9	.03 .8	.25 6.4	1.03 26.2	Cylindrical 7 178	N/A	N/A	N/A	See Load-Speed Chart	
BCFE 1/2 S BCFE 1/2 SB BCCFE 1/2 S BCCFE 1/2 SB	.500 12.70	+0/-.001 +0/-.03	.375 9.53	+0 / -.005 +0 / -.13	.190 4.83	+.001/-0 +.03/-0	.625 15.9	.03 .8	.25 6.4	1.03 26.2	Cylindrical 7 178	.010 .25	.38 9.5	.25 6.4	See Load-Speed Chart	
BCF 9/16 S BCF 9/16 SB BCCF 9/16 S BCCF 9/16 SB	.5625 14.29	+0/-.001 +0/-.03	.375 9.53	+0 / -.005 +0 / -.13	.190 4.83	+.001/-0 +.03/-0	.625 15.9	.03 .8	.25 6.4	1.03 26.2	Cylindrical 7 178	N/A	N/A	N/A	See Load-Speed Chart	
BCFE 9/16 S BCFE 9/16 SB BCCFE 9/16 S BCCFE 9/16 SB	.5625 14.29	+0/-.001 +0/-.03	.375 9.53	+0 / -.005 +0 / -.13	.190 4.83	+.001/-0 +.03/-0	.625 15.9	.03 .8	.25 6.4	1.03 26.2	Cylindrical 7 178	.010 .25	.38 9.5	.25 6.4	See Load-Speed Chart	
BCF 5/8 S BCF 5/8 SB BCCF 5/8 S BCCF 5/8 SB	.625 15.88	+0/-.001 +0/-.03	.4375 11.11	+0 / -.005 +0 / -.13	.250 6.35	+.001/-0 +.03/-0	.75 19.1	.03 .8	.31 7.9	1.22 31.0	Cylindrical 8 203	N/A	N/A	N/A	See Load-Speed Chart	
BCFE 5/8 S BCFE 5/8 SB BCCFE 5/8 S BCCFE 5/8 SB	.625 15.88	+0/-.001 +0/-.03	.4375 11.11	+0 / -.005 +0 / -.13	.250 6.35	+.001/-0 +.03/-0	.75 19.1	.03 .8	.31 7.9	1.22 31.0	Cylindrical 8 203	.015 .38	.44 11.1	.38 9.5	See Load-Speed Chart	
BCF 11/16 S BCF 11/16 SB BCCF 11/16 S BCCF 11/16 SB	.6875 17.46	+0/-.001 +0/-.03	.4375 11.11	+0 / -.005 +0 / -.13	.250 6.35	+.001/-0 +.03/-0	.75 19.1	.03 .8	.31 7.9	1.22 31.0	Cylindrical 8 203	N/A	N/A	N/A	See Load-Speed Chart	
BCFE 11/16 S BCFE 11/16 SB BCCFE 11/16 S BCCFE 11/16 SB	.6875 17.46	+0/-.001 +0/-.03	.4375 11.11	+0 / -.005 +0 / -.13	.250 6.35	+.001/-0 +.03/-0	.75 19.1	.03 .8	.31 7.9	1.22 31.0	Cylindrical 8 203	.015 .38	.44 11.1	.38 9.5	See Load-Speed Chart	

Metric dimensions for reference only.
Not all parts are available from stock. Please contact customer service for availability (800) 626-2120.
For more information on bearing capabilities outside of our standard offering, please contact Application Engineering (800) 626-2093.

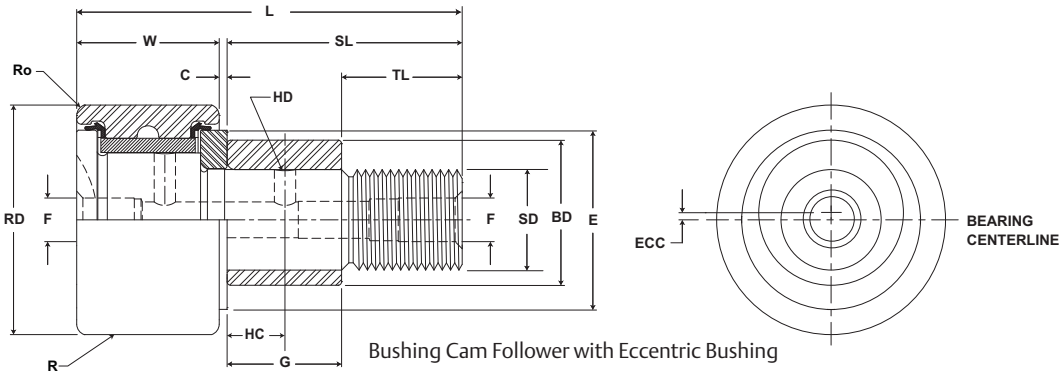

Bushing Cam Follower with Eccentric Bushing

BCF, BCFE

Part No. With LUBRI-DISC Seals	HC Hole Center (Ref)	HD Radial Hole Diameter (Ref)	F Axial Hole Dia or Fitting (Ref)	H Hex Hole (Ref)	E Min Boss Diameter (Ref)	Ro Outer Corner Radius (Ref)	Housing Bore Diameter Nom.	Housing Bore Diameter Tol.	Thread Type	Clamping Torque in-lb / Nm	Limiting Speed RPM	WT Bearing Weight lb / kg
	inch / mm	inch / mm	inch / mm	inch / mm	inch / mm	inch / mm	inch / mm	inch / mm				
BCF 1/2 S BCF 1/2 SB BCCF 1/2 S BCCF 1/2 SB	-	-	.125 3.17	.125 3.17	.41 10.4	.02 .4 N/A	.1903 4.834	+.0002/-.0003 +.0005/-.0008	10-32	15 2	See Load-Speed Chart	.04 .02
BCFE 1/2 S BCFE 1/2 SB BCCFE 1/2 S BCCFE 1/2 SB	-	-	.125 3.17	.125 3.17	.41 10.4	.02 .4 N/A	.253 6.426	+.001/-.001 +.025/-.025	10-32	15 2	See Load-Speed Chart	.04 .02
BCF 9/16 S BCF 9/16 SB BCCF 9/16 S BCCF 9/16 SB	-	-	.125 3.17	.125 3.17	.41 10.4	.02 .4 N/A	.1903 4.834	+.0002/-.0003 +.0005/-.0008	10-32	15 2	See Load-Speed Chart	.04 .02
BCFE 9/16 S BCFE 9/16 SB BCCFE 9/16 S BCCFE 9/16 SB	-	-	.125 3.17	.125 3.17	.41 10.4	.02 .4 N/A	.253 6.426	+.001/-.001 +.025/-.025	10-32	15 2	See Load-Speed Chart	.04 .02
BCF 5/8 S BCF 5/8 SB BCCF 5/8 S BCCF 5/8 SB	-	-	.125 3.17	.125 3.17	.46 11.7	.02 .4 N/A	.2503 6.358	+.0002/-.0003 +.0005/-.0008	1/4-28	35 4	See Load-Speed Chart	.05 .02
BCFE 5/8 S BCFE 5/8 SB BCCFE 5/8 S BCCFE 5/8 SB	-	-	.125 3.17	.125 3.17	.46 11.7	.02 .4 N/A	.378 9.60	+.001/-.001 +.025/-.025	1/4-28	35 4	See Load-Speed Chart	.05 .02
BCF 11/16 S BCF 11/16 SB BCCF 11/16 S BCCF 11/16 SB	-	-	.125 3.17	.125 3.17	.46 11.7	.02 .4 N/A	.2503 6.358	+.0002/-.0003 +.0005/-.0008	1/4-28	35 4	See Load-Speed Chart	.06 .03
BCFE 11/16 S BCFE 11/16 SB BCCFE 11/16 S BCCFE 11/16 SB	-	-	.125 3.17	.125 3.17	.46 11.7	.02 .4 N/A	.378 9.60	+.001/-.001 +.025/-.025	1/4-28	35 4	See Load-Speed Chart	.06 .03

McGILL® Inch Cam Follower Bearings

Basic Construction Type: Stud Type Crowned / Cylindrical Outside Diameter

Rolling Elements: Non-Metallic Bushing

Bearing Material: Bearing Quality Steel

Seal Type: LUBRI-DISC®

Lubrication: None - Self Lubricating Bushing

System Configuration: Concentric / Eccentric

Mounting Feature: Slot / Hex Hole

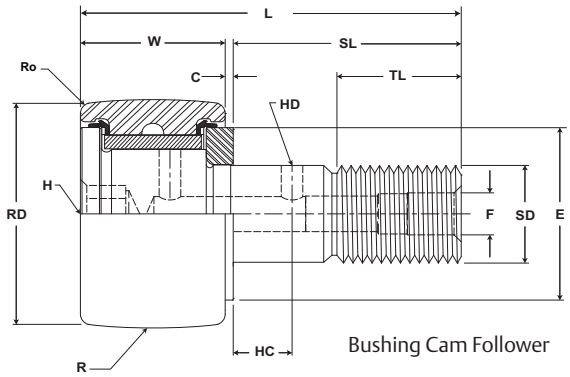

Bushing Cam Follower

BCF, BCFE

Part No.	RD		W		SD		SL	C	TL	L	R	ECC	G	BD	Track Roller Dynamic Rating	Track Roller Static Rating
With LUBRI-DISC Seals	Roller Diameter		Roller Width		Stud Diameter		Stud Length	Endplate Extension	Minimum Thread Length	Length Overall	Crown Prefix BCCF-XX	Eccentric Base Modifier BCFE-XX				
	inch mm		inch mm		inch mm		inch mm		inch mm		inch mm	inch mm			N/lb	N/lb
	Nom.	Tol.	Nom.	Tol.	Nom.	Tol.	(Ref)	(Ref)	(Ref)	(Ref)	Radius	(Ref)	+0/-.001 (+0/-.03)	± .001 (± .03)		
BCF 3/4 S BCF 3/4 SB BCCF 3/4 S BCCF 3/4 SB	.750 19.05	+0/-.001 +0/-.03	.500 12.70	+0 / -.005 +0 / -.13	.375 9.53	+.001/-0 +.03/-0	.875 22.2	.03 .8	.38 9.5	1.41 35.7	Cylindrical 10 254	N/A	N/A	N/A	See Load-Speed Chart	
BCFE 3/4 S BCFE 3/4 SB BCCFE 3/4 S BCCFE 3/4 SB	.750 19.05	+0/-.001 +0/-.03	.500 12.70	+0 / -.005 +0 / -.13	.375 9.53	+.001/-0 +.03/-0	.875 22.2	.03 .8	.38 9.5	1.41 35.7	Cylindrical 10 254	.015 .38	.50 12.7	.50 12.7	See Load-Speed Chart	
BCF 7/8 S BCF 7/8 SB BCCF 7/8 S BCCF 7/8 SB	.875 22.23	+0/-.001 +0/-.03	.500 12.70	+0 / -.005 +0 / -.13	.375 9.53	+.001/-0 +.03/-0	.875 22.2	.03 .8	.38 9.5	1.41 35.7	Cylindrical 10 254	N/A	N/A	N/A	See Load-Speed Chart	
BCFE 7/8 S BCFE 7/8 SB BCCFE 7/8 S BCCFE 7/8 SB	.875 22.23	+0/-.001 +0/-.03	.500 12.70	+0 / -.005 +0 / -.13	.375 9.53	+.001/-0 +.03/-0	.875 22.2	.03 .8	.38 9.5	1.41 35.7	Cylindrical 10 254	.015 .38	.50 12.7	.50 12.7	See Load-Speed Chart	
BCF 1 S BCF 1 SB BCCF 1 S BCCF 1 SB	1.000 25.40	+0/-.001 +0/-.03	.625 15.88	+0 / -.005 +0 / -.13	.4375 11.11	+.001/-0 +.03/-0	1.00 25.4	.03 .8	.50 12.7	1.66 42.1	Cylindrical 12 305	N/A	N/A	N/A	See Load-Speed Chart	
BCFE 1 S BCFE 1 SB BCCFE 1 S BCCFE 1 SB	1.000 25.40	+0/-.001 +0/-.03	.625 15.88	+0 / -.005 +0 / -.13	.4375 11.11	+.001/-0 +.03/-0	1.00 25.4	.03 .8	.50 12.7	1.66 42.1	Cylindrical 12 305	.030 .76	.50 12.7	.63 15.9	See Load-Speed Chart	
BCF 1 1/8 S BCF 1 1/8 SB BCCF 1 1/8 S BCCF 1 1/8 SB	1.125 28.58	+0/-.001 +0/-.03	.625 15.88	+0 / -.005 +0 / -.13	.4375 11.11	+.001/-0 +.03/-0	1.00 25.4	.03 .8	.50 12.7	1.66 42.1	Cylindrical 12 305	N/A	N/A	N/A	See Load-Speed Chart	
BCFE 1 1/8 S BCFE 1 1/8 SB BCCFE 1 1/8 S BCCFE 1 1/8 SB	1.125 28.58	+0/-.001 +0/-.03	.625 15.88	+0 / -.005 +0 / -.13	.4375 11.11	+.001/-0 +.03/-0	1.00 25.4	.03 .8	.50 12.7	1.66 42.1	Cylindrical 12 305	.030 .76	.50 12.7	.63 15.9	See Load-Speed Chart	

Metric dimensions for reference only.
Not all parts are available from stock. Please contact customer service for availability (800) 626-2120.
For more information on bearing capabilities outside of our standard offering, please contact Application Engineering (800) 626-2093.

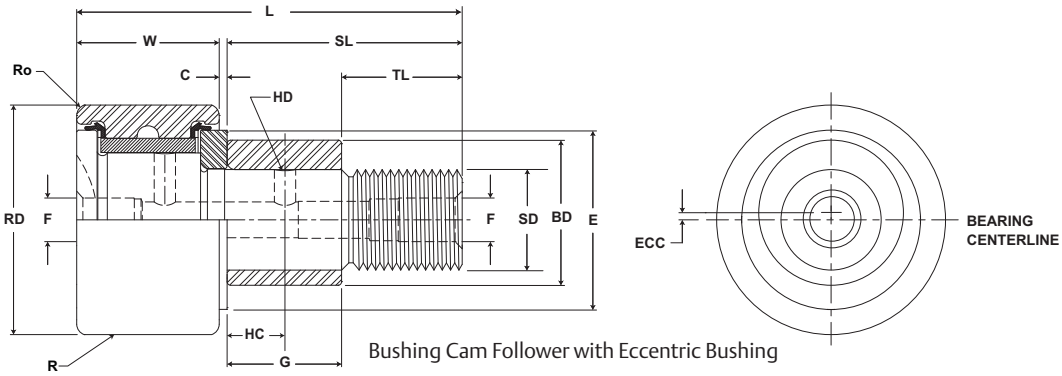

Bushing Cam Follower with Eccentric Bushing

BCF, BCFE

Part No. With LUBRI-DISC Seals	HC Hole Center (Ref) inch mm	HD Radial Hole Diameter (Ref) inch mm	F Axial Hole Dia or Fitting (Ref) inch mm	H Hex Hole (Ref) inch mm	E Min Boss Diameter (Ref) inch mm	Ro Outer Corner Radius (Ref) inch mm	Housing Bore Diameter Nom. inch mm	Housing Bore Diameter Tol. inch mm	Thread Type	Clamping Torque in-lb Nm	Limiting Speed RPM	WT Bearing Weight lb kg
BCF 3/4 S BCF 3/4 SB BCCF 3/4 S BCCF 3/4 SB	.25 6.4	.09 2.4	.1875 4.76	.1875 4.76	.61 15.5	.02 .4 N/A	.3753 9.533	+.0002/-.0003 +.0005/-.0008	3/8-24	95 11	See Load-Speed Chart	.07 .03
BCFE 3/4 S BCFE 3/4 SB BCCFE 3/4 S BCCFE 3/4 SB	.25 6.4	.09 2.4	.1875 4.76	.1875 4.76	.61 15.5	.02 .4 N/A	.503 12.77	+.001/-.001 +.025/-.025	3/8-24	95 11	See Load-Speed Chart	.07 .03
BCF 7/8 S BCF 7/8 SB BCCF 7/8 S BCCF 7/8 SB	.25 6.4	.09 2.4	.1875 4.76	.1875 4.76	.61 15.5	.02 .4 N/A	.3753 9.533	+.0002/-.0003 +.0005/-.0008	3/8-24	95 11	See Load-Speed Chart	.09 .04
BCFE 7/8 S BCFE 7/8 SB BCCFE 7/8 S BCCFE 7/8 SB	.25 6.4	.09 2.4	.1875 4.76	.1875 4.76	.61 15.5	.02 .4 N/A	.503 12.77	+.001/-.001 +.025/-.025	3/8-24	95 11	See Load-Speed Chart	.09 .04
BCF 1 S BCF 1 SB BCCF 1 S BCCF 1 SB	.25 6.4	.09 2.4	.1875 4.76	.25 6.4	.78 19.8	.03 .8 N/A	.4378 11.120	+.0002/-.0003 +.0005/-.0008	7/16-20	250 28	See Load-Speed Chart	.17 .08
BCFE 1 S BCFE 1 SB BCCFE 1 S BCCFE 1 SB	.25 6.4	.09 2.4	.1875 4.76	.25 6.4	.78 19.8	.03 .8 N/A	.628 15.95	+.001/-.001 +.025/-.025	7/16-20	250 28	See Load-Speed Chart	.17 .08
BCF 1 1/8 S BCF 1 1/8 SB BCCF 1 1/8 S BCCF 1 1/8 SB	.25 6.4	.09 2.4	.1875 4.76	.25 6.4	.78 19.8	.03 .8 N/A	.4378 11.120	+.0002/-.0003 +.0005/-.0008	7/16-20	250 28	See Load-Speed Chart	.19 .09
BCFE 1 1/8 S BCFE 1 1/8 SB BCCFE 1 1/8 S BCCFE 1 1/8 SB	.25 6.4	.09 2.4	.1875 4.76	.25 6.4	.78 19.8	.03 .8 N/A	.628 15.95	+.001/-.001 +.025/-.025	7/16-20	250 28	See Load-Speed Chart	.19 .09

Metric dimensions for reference only.
Clamping torque is based on dry threads. If threads are lubricated, use half of value shown.

McGILL® Inch Cam Follower Bearings

Basic Construction Type: Stud Type Crowned / Cylindrical Outside Diameter

Rolling Elements: Non-Metallic Bushing

Bearing Material: Bearing Quality Steel

Seal Type: LUBRI-DISC®

Lubrication: None - Self Lubricating Bushing

System Configuration: Concentric / Eccentric

Mounting Feature: Slot / Hex Hole

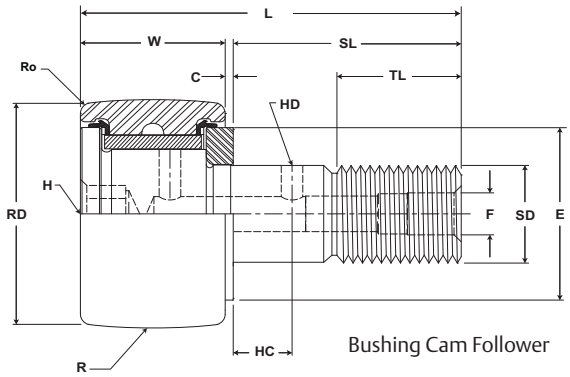

Bushing Cam Follower

BCF, BCFE

Part No. With LUBRI-DISC Seals	RD Roller Diameter inch mm Nom.	RD Roller Diameter inch mm Tol.	W Roller Width inch mm Nom.	W Roller Width inch mm Tol.	SD Stud Diameter inch mm Nom.	SD Stud Diameter inch mm Tol.	SL Stud Length inch mm (Ref)	C Endplate Extension inch mm (Ref)	TL Minimum Thread Length inch mm (Ref)	L Length Overall inch mm (Ref)	R Crown Prefix BCCF-XX inch mm Radius	ECC Eccentric Base Modifier BCFE-XX inch mm (Ref)	G Eccentric Base Modifier BCFE-XX inch mm +0/-.001 (+0/-.03)	BD Eccentric Base Modifier BCFE-XX inch mm ± .001 (± .03)	Track Roller Dynamic Rating N/lb	Track Roller Static Rating N/lb
BCF 1 1/4 S BCF 1 1/4 SB BCCF 1 1/4 S BCCF 1 1/4 SB	1.250 31.75	+0/-.001 +0/-.03	.750 19.05	+0 / -.005 +0 / -.13	.500 12.70	+.001/-0 +.03/-0	1.25 31.8	.03 .8	.63 15.9	2.03 51.6	Cylindrical 14 356	N/A	N/A	N/A	See Load-Speed Chart	
BCFE 1 1/4 S BCFE 1 1/4 SB BCCFE 1 1/4 S BCCFE 1 1/4 SB	1.250 31.75	+0/-.001 +0/-.03	.750 19.05	+0 / -.005 +0 / -.13	.500 12.70	+.001/-0 +.03/-0	1.25 31.8	.03 .8	.63 15.9	2.03 51.6	Cylindrical 14 356	.030 .76	.63 15.9	.69 17.4	See Load-Speed Chart	
BCF 1 3/8 S BCF 1 3/8 SB BCCF 1 3/8 S BCCF 1 3/8 SB	1.375 34.93	+0/-.001 +0/-.03	.750 19.05	+0 / -.005 +0 / -.13	.500 12.70	+.001/-0 +.03/-0	1.25 31.8	.03 .8	.63 15.9	2.03 51.6	Cylindrical 14 356	N/A	N/A	N/A	See Load-Speed Chart	
BCFE 1 3/8 S BCFE 1 3/8 SB BCCFE 1 3/8 S BCCFE 1 3/8 SB	1.375 34.93	+0/-.001 +0/-.03	.750 19.05	+0 / -.005 +0 / -.13	.500 12.70	+.001/-0 +.03/-0	1.25 31.8	.03 .8	.63 15.9	2.03 51.6	Cylindrical 14 356	.030 .76	.63 15.9	.69 17.4	See Load-Speed Chart	
BCF 1 1/2 S BCF 1 1/2 SB BCCF 1 1/2 S BCCF 1 1/2 SB	1.500 38.10	+0/-.001 +0/-.03	.875 22.23	+0 / -.005 +0 / -.13	.625 15.88	+.001/-0 +.03/-0	1.50 38.1	.03 .8	.75 19.1	2.41 61.1	Cylindrical 20 508	N/A	N/A	N/A	See Load-Speed Chart	
BCFE 1 1/2 S BCFE 1 1/2 SB BCCFE 1 1/2 S BCCFE 1 1/2 SB	1.500 38.10	+0/-.001 +0/-.03	.875 22.23	+0 / -.005 +0 / -.13	.625 15.88	+.001/-0 +.03/-0	1.50 38.1	.03 .8	.75 19.1	2.41 61.1	Cylindrical 20 508	.030 .76	.75 19.1	.88 22.2	See Load-Speed Chart	
BCF 1 5/8 S BCF 1 5/8 SB BCCF 1 5/8 S BCCF 1 5/8 SB	1.625 41.28	+0/-.001 +0/-.03	.875 22.23	+0 / -.005 +0 / -.13	.625 15.88	+.001/-0 +.03/-0	1.50 38.1	.03 .8	.75 19.1	2.41 61.1	Cylindrical 20 508	N/A	N/A	N/A	See Load-Speed Chart	
BCFE 1 5/8 S BCFE 1 5/8 SB BCCFE 1 5/8 S BCCFE 1 5/8 SB	1.625 41.28	+0/-.001 +0/-.03	.875 22.23	+0 / -.005 +0 / -.13	.625 15.88	+.001/-0 +.03/-0	1.50 38.1	.03 .8	.75 19.1	2.41 61.1	Cylindrical 20 508	.030 .76	.75 19.1	.88 22.2	See Load-Speed Chart	

Metric dimensions for reference only.
Not all parts are available from stock. Please contact customer service for availability (800) 626-2120.
For more information on bearing capabilities outside of our standard offering, please contact Application Engineering (800) 626-2093.

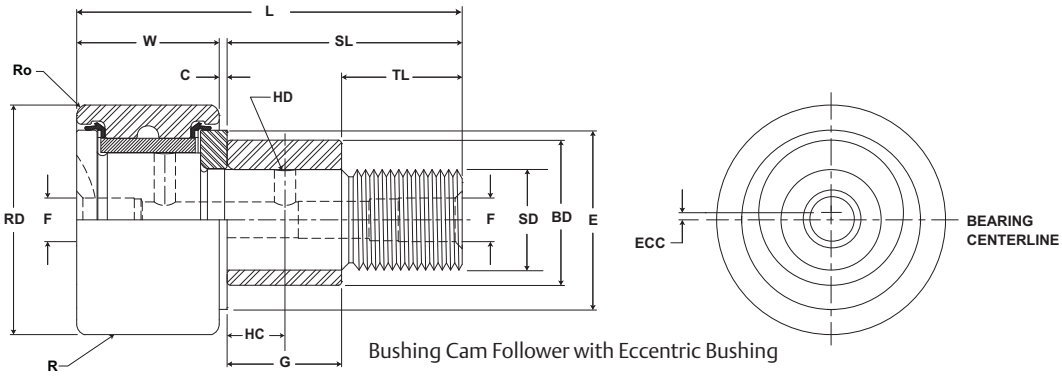

Bushing Cam Follower with Eccentric Bushing

BCF, BCFE

Part No. With LUBRI-DISC Seals	HC Hole Center inch mm (Ref)	HD Radial Hole Diameter inch mm (Ref)	F Axial Hole Dia or Fitting inch mm (Ref)	H Hex Hole inch mm (Ref)	E Min Boss Diameter inch mm (Ref)	Ro Outer Corner Radius inch mm (Ref)	Housing Bore Diameter inch mm Nom.	Housing Bore Diameter inch mm Tol.	Thread Type	Clamping Torque in-lb Nm	Limiting Speed RPM	WT Bearing Weight lb kg
BCF 1 1/4 S BCF 1 1/4 SB BCCF 1 1/4 S BCCF 1 1/4 SB	.31 7.9	.09 2.4	.1875 4.76	.25 6.4	.98 25.0	.03 .8 N/A	.5003 12.708	+.0002/-.0003 +.0005/-.0008	1/2-20	350 40	See Load-Speed Chart	.30 .14
BCFE 1 1/4 S BCFE 1 1/4 SB BCCFE 1 1/4 S BCCFE 1 1/4 SB	.31 7.9	.09 2.4	.1875 4.76	.25 6.4	.98 25.0	.03 .8 N/A	.690 17.52	+.001/-.001 +.025/-.025	1/2-20	350 40	See Load-Speed Chart	.30 .14
BCF 1 3/8 S BCF 1 3/8 SB BCCF 1 3/8 S BCCF 1 3/8 SB	.31 7.9	.09 2.4	.1875 4.76	.25 6.4	.98 25.0	.05 1.2 N/A	.5003 12.708	+.0002/-.0003 +.0005/-.0008	1/2-20	350 40	See Load-Speed Chart	.35 .16
BCFE 1 3/8 S BCFE 1 3/8 SB BCCFE 1 3/8 S BCCFE 1 3/8 SB	.31 7.9	.09 2.4	.1875 4.76	.25 6.4	.98 25.0	.05 1.2 N/A	.690 17.52	+.001/-.001 +.025/-.025	1/2-20	350 40	See Load-Speed Chart	.35 .16
BCF 1 1/2 S BCF 1 1/2 SB BCCF 1 1/2 S BCCF 1 1/2 SB	.38 9.5	.09 2.4	.1875 4.76	.31 7.9	1.09 27.8	.06 1.6 N/A	.6253 15.883	+.0002/-.0003 +.0005/-.0008	5/8-18	650 73	See Load-Speed Chart	.53 .24
BCFE 1 1/2 S BCFE 1 1/2 SB BCCFE 1 1/2 S BCCFE 1 1/2 SB	.38 9.5	.09 2.4	.1875 4.76	.31 7.9	1.09 27.8	.06 1.6 N/A	.878 22.30	+.001/-.001 +.025/-.025	5/8-18	650 73	See Load-Speed Chart	.53 .24
BCF 1 5/8 S BCF 1 5/8 SB BCCF 1 5/8 S BCCF 1 5/8 SB	.38 9.5	.09 2.4	.1875 4.76	.31 7.9	1.09 27.8	.06 1.6 N/A	.6253 15.883	+.0002/-.0003 +.0005/-.0008	5/8-18	650 73	See Load-Speed Chart	.60 .27
BCFE 1 5/8 S BCFE 1 5/8 SB BCCFE 1 5/8 S BCCFE 1 5/8 SB	.38 9.5	.09 2.4	.1875 4.76	.31 7.9	1.09 27.8	.06 1.6 N/A	.878 22.30	+.001/-.001 +.025/-.025	5/8-18	650 73	See Load-Speed Chart	.60 .27

McGILL® Inch Cam Follower Bearings

Basic Construction Type: Stud Type Crowned / Cylindrical Outside Diameter

Rolling Elements: Non-Metallic Bushing

Bearing Material: Bearing Quality Steel

Seal Type: LUBRI-DISC®

Lubrication: None - Self Lubricating Bushing

System Configuration: Concentric / Eccentric

Mounting Feature: Slot / Hex Hole

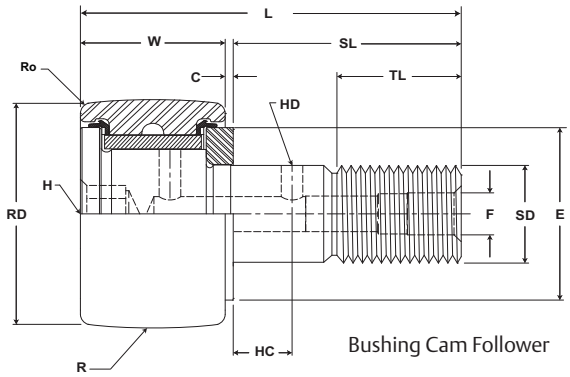

Bushing Cam Follower

BCF, BCFE

Part No.	RD		W		SD		SL	C	TL	L	R	ECC	G	BD	Track Roller Dynamic Rating	Track Roller Static Rating
With LUBRI-DISC Seals	Roller Diameter		Roller Width		Stud Diameter		Stud Length	Endplate Extension	Minimum Thread Length	Length Overall	Crown Prefix BCCF-XX	Eccentric Base Modifier BCFE-XX				
	inch mm		inch mm		inch mm		inch mm		inch mm		inch mm	inch mm			N/lb	N/lb
	Nom.	Tol.	Nom.	Tol.	Nom.	Tol.	(Ref)	(Ref)	(Ref)	(Ref)	Radius	(Ref)	+0/-.001 (+0/-.03)	± .001 (± .03)		
BCF 1 3/4 S BCF 1 3/4 SB BCCF 1 3/4 S BCCF 1 3/4 SB	1.750 44.45	+0/-.001 +0/-.03	1.000 25.40	0 / -.005 +0 / -.13	.750 19.05	+.001/-0 +.03/-0	1.75 44.5	.03 .8	.88 22.2	2.78 70.6	Cylindrical 20 508	N/A	N/A	N/A	See Load-Speed Chart	
BCFE 1 3/4 S BCFE 1 3/4 SB BCCFE 1 3/4 S BCCFE 1 3/4 SB	1.750 44.45	+0/-.001 +0/-.03	1.000 25.40	0 / -.005 +0 / -.13	.750 19.05	+.001/-0 +.03/-0	1.75 44.5	.03 .8	.88 22.2	2.78 70.6	Cylindrical 20 508	.030 .76	.88 22.2	.00 25.4	See Load-Speed Chart	
BCF 1 7/8 S BCF 1 7/8 SB BCCF 1 7/8 S BCCF 1 7/8 SB	1.875 47.63	+0/-.001 +0/-.03	1.000 25.40	0 / -.005 +0 / -.13	.750 19.05	+.001/-0 +.03/-0	1.75 44.5	.03 .8	.88 22.2	2.78 70.6	Cylindrical 20 508	N/A	N/A	N/A	See Load-Speed Chart	
BCFE 1 7/8 S BCFE 1 7/8 SB BCCFE 1 7/8 S BCCFE 1 7/8 SB	1.875 47.63	+0/-.001 +0/-.03	1.000 25.40	0 / -.005 +0 / -.13	.750 19.05	+.001/-0 +.03/-0	1.75 44.5	.03 .8	.88 22.2	2.78 70.6	Cylindrical 20 508	.030 .76	.88 22.2	.00 25.4	See Load-Speed Chart	
BCF 2 S BCF 2 SB BCCF 2 S BCCF 2 SB	2.000 50.80	+0/-.001 +0/-.03	1.250 31.75	0 / -.005 +0 / -.13	.875 22.23	+.001/-0 +.03/-0	2.00 50.8	.03 .8	2.00 50.8	3.28 83.3	Cylindrical 24 610	N/A	N/A	N/A	See Load-Speed Chart	
BCFE 2 S BCFE 2 SB BCCFE 2 S BCCFE 2 SB	2.000 50.80	+0/-.001 +0/-.03	1.250 31.75	0 / -.005 +0 / -.13	.875 22.23	+.001/-0 +.03/-0	2.00 50.8	.03 .8	2.00 50.8	3.28 83.3	Cylindrical 24 610	.030 .76	.00 25.4	.19 30.1	See Load-Speed Chart	
BCF 2 1/4 S BCF 2 1/4 SB BCCF 2 1/4 S BCCF 2 1/4 SB	2.250 57.15	+0/-.001 +0/-.03	1.250 31.75	0 / -.005 +0 / -.13	.875 22.23	+.001/-0 +.03/-0	2.00 50.8	.03 .8	2.00 50.8	3.28 83.3	Cylindrical 24 610	N/A	N/A	N/A	See Load-Speed Chart	
BCFE 2 1/4 S BCFE 2 1/4 SB BCCFE 2 1/4 S BCCFE 2 1/4 SB	2.250 57.15	+0/-.001 +0/-.03	1.250 31.75	0 / -.005 +0 / -.13	.875 22.23	+.001/-0 +.03/-0	2.00 50.8	.03 .8	2.00 50.8	3.28 83.3	Cylindrical 24 610	.030 .76	.00 25.4	.19 30.1	See Load-Speed Chart	

Metric dimensions for reference only.
Not all parts are available from stock. Please contact customer service for availability (800) 626-2120.
For more information on bearing capabilities outside of our standard offering, please contact Application Engineering (800) 626-2093.

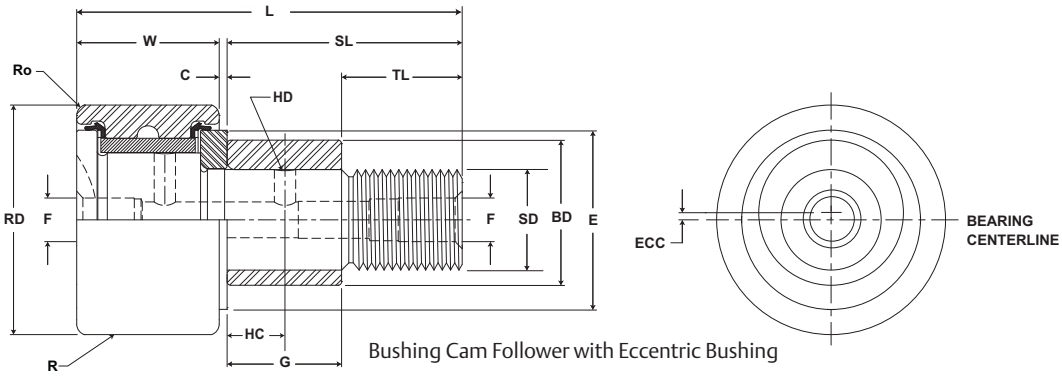

Bushing Cam Follower with Eccentric Bushing

BCF, BCFE

Part No. With LUBRI-DISC Seals	HC Hole Center inch mm (Ref)	HD Radial Hole Diameter inch mm (Ref)	F Axial Hole Dia or Fitting inch mm (Ref)	H Hex Hole inch mm (Ref)	E Min Boss Diameter inch mm (Ref)	Ro Outer Corner Radius inch mm (Ref)	Housing Bore Diameter inch mm Nom.	Housing Bore Diameter inch mm Tol.	Thread Type	Clamping Torque in-lb Nm	Limiting Speed RPM	WT Bearing Weight lb kg
BCF 1 3/4 S BCF 1 3/4 SB BCCF 1 3/4 S BCCF 1 3/4 SB	.44 11.1	.125 3	.1875 4.76	.31 7.9	1.25 31.8	.06 1.6 N/A	.7503 19.058	+.0002/-.0003 +.0005/-.0008	3/4-16	1,250 141	See Load-Speed Chart	.84 .38
BCFE 1 3/4 S BCFE 1 3/4 SB BCCFE 1 3/4 S BCCFE 1 3/4 SB	.44 11.1	.125 3	.1875 4.76	.31 7.9	1.25 31.8	.06 1.6 N/A	1.003 25.47	+.001/-.001 +.025/-.025	3/4-16	1,250 141	See Load-Speed Chart	.84 .38
BCF 1 7/8 S BCF 1 7/8 SB BCCF 1 7/8 S BCCF 1 7/8 SB	.44 11.1	.125 3	.1875 4.76	.31 7.9	1.25 31.8	.06 1.6 N/A	.7503 19.058	+.0002/-.0003 +.0005/-.0008	3/4-16	1,250 141	See Load-Speed Chart	.95 .43
BCFE 1 7/8 S BCFE 1 7/8 SB BCCFE 1 7/8 S BCCFE 1 7/8 SB	.44 11.1	.125 3	.1875 4.76	.31 7.9	1.25 31.8	.06 1.6 N/A	1.003 25.47	+.001/-.001 +.025/-.025	3/4-16	1,250 141	See Load-Speed Chart	.95 .43
BCF 2 S BCF 2 SB BCCF 2 S BCCF 2 SB	.50 12.7	.125 3	.1875 4.76	.44 11.1	1.41 35.7	.09 2.4 N/A	.8753 22.233	+.0002/-.0003 +.0005/-.0008	7/8-14	1,500 170	See Load-Speed Chart	1.36 .62
BCFE 2 S BCFE 2 SB BCCFE 2 S BCCFE 2 SB	.50 12.7	.125 3	.1875 4.76	.44 11.1	1.41 35.7	.09 2.4 N/A	1.190 30.22	+.001/-.001 +.025/-.025	7/8-14	1,500 170	See Load-Speed Chart	1.36 .62
BCF 2 1/4 S BCF 2 1/4 SB BCCF 2 1/4 S BCCF 2 1/4 SB	.50 12.7	.125 3	.1875 4.76	.44 11.1	1.41 35.7	.09 2.4 N/A	.8753 22.233	+.0002/-.0003 +.0005/-.0008	7/8-14	1,500 170	See Load-Speed Chart	1.65 .75
BCFE 2 1/4 S BCFE 2 1/4 SB BCCFE 2 1/4 S BCCFE 2 1/4 SB	.50 12.7	.125 3	.1875 4.76	.44 11.1	1.41 35.7	.09 2.4 N/A	.8753 22.233	+.001/-.001 +.025/-.025	7/8-14	1,500 170	See Load-Speed Chart	1.65 .75

McGILL® Inch Cam Follower Bearings

Basic Construction Type: Stud Type Crowned / Cylindrical Outside Diameter

Rolling Elements: Non-Metallic Bushing

Bearing Material: Bearing Quality Steel

Seal Type: LUBRI-DISC®

Lubrication: None - Self Lubricating Bushing

System Configuration: Concentric / Eccentric

Mounting Feature: Slot / Hex Hole

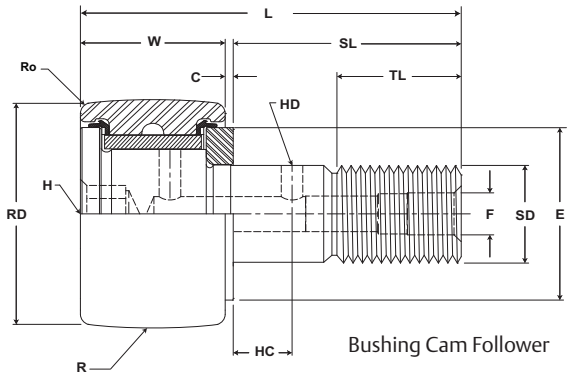

Bushing Cam Follower

BCF, BCFE

Part No.	RD		W		SD		SL	C	TL	L	R	ECC	G	BD	Track Roller Dynamic Rating	Track Roller Static Rating
With LUBRI-DISC Seals	Roller Diameter		Roller Width		Stud Diameter		Stud Length	Endplate Extension	Minimum Thread Length	Length Overall	Crown Prefix BCCF-XX	Eccentric Base Modifier BCFE-XX				
	inch mm		inch mm		inch mm		inch mm		inch mm		inch mm	inch mm			N/lb	N/lb
	Nom.	Tol.	Nom.	Tol.	Nom.	Tol.	(Ref)	(Ref)	(Ref)	(Ref)	Radius	(Ref)	+0/-.001 (+0/-.03)	± .001 (± .03)		
BCF 2 1/2 S BCF 2 1/2 SB BCCF 2 1/2 S BCCF 2 1/2 SB	2.500 63.50	+0/-.001 +0/-.03	1.500 38.10	+0 / -.005 +0 / -.13	1.000 25.40	+.001/-0 +.03/-0	2.25 57.2	.03 .8	2.25 57.2	3.78 96.0	Cylindrical 30 762	N/A	N/A	N/A	See Load-Speed Chart	
BCFE 2 1/2 S BCFE 2 1/2 SB BCCFE 2 1/2 S BCCFE 2 1/2 SB	2.500 63.50	+0/-.001 +0/-.03	1.500 38.10	+0 / -.005 +0 / -.13	1.000 25.40	+.001/-0 +.03/-0	2.25 57.2	.03 .8	2.25 57.2	3.78 96.0	Cylindrical 30 762	.030 .76	.13 28.6	.38 34.9	See Load-Speed Chart	
BCF 2 3/4 S BCF 2 3/4 SB BCCF 2 3/4 S BCCF 2 3/4 SB	2.750 69.85	+0/-.001 +0/-.03	1.500 38.10	+0 / -.005 +0 / -.13	1.000 25.40	+.001/-0 +.03/-0	2.25 57.2	.03 .8	2.25 57.2	3.78 96.0	Cylindrical 30 762	N/A	N/A	N/A	See Load-Speed Chart	
BCFE 2 3/4 S BCFE 2 3/4 SB BCCFE 2 3/4 S BCCFE 2 3/4 SB	2.750 69.85	+0/-.001 +0/-.03	1.500 38.10	+0 / -.005 +0 / -.13	1.000 25.40	+.001/-0 +.03/-0	2.25 57.2	.03 .8	2.25 57.2	3.78 96.0	Cylindrical 30 762	.030 .76	.13 28.6	.38 34.9	See Load-Speed Chart	
BCF 3 S BCF 3 SB BCCF 3 S BCCF 3 SB	3.000 76.20	+0/-.001 +0/-.03	1.750 44.45	+0 / -.005 +0 / -.13	1.250 31.75	+.001/-0 +.03/-0	2.50 63.5	.03 .8	2.50 63.5	4.28 108.7	Cylindrical 30 762	N/A	N/A	N/A	See Load-Speed Chart	
BCFE 3 S BCFE 3 SB BCCFE 3 S BCCFE 3 SB	3.000 76.20	+0/-.001 +0/-.03	1.750 44.45	+0 / -.005 +0 / -.13	1.250 31.75	+.001/-0 +.03/-0	2.50 63.5	.03 .8	2.50 63.5	4.28 108.7	Cylindrical 30 762	.060 .52	.25 31.8	.75 44.5	See Load-Speed Chart	
BCF 3 1/4 S BCF 3 1/4 SB BCCF 3 1/4 S BCCF 3 1/4 SB	3.250 82.55	+0/-.001 +0/-.03	1.750 44.45	+0 / -.005 +0 / -.13	1.250 31.75	+.001/-0 +.03/-0	2.50 63.5	.03 .8	2.50 63.5	4.28 108.7	Cylindrical 30 762	N/A	N/A	N/A	See Load-Speed Chart	
BCFE 3 1/4 S BCFE 3 1/4 SB BCCFE 3 1/4 S BCCFE 3 1/4 SB	3.250 82.55	+0/-.001 +0/-.03	1.750 44.45	+0 / -.005 +0 / -.13	1.250 31.75	+.001/-0 +.03/-0	2.50 63.5	.03 .8	2.50 63.5	4.28 108.7	Cylindrical 30 762	.060 .52	.25 31.8	.75 44.5	See Load-Speed Chart	

Metric dimensions for reference only.
Not all parts are available from stock. Please contact customer service for availability (800) 626-2120.
For more information on bearing capabilities outside of our standard offering, please contact Application Engineering (800) 626-2093.

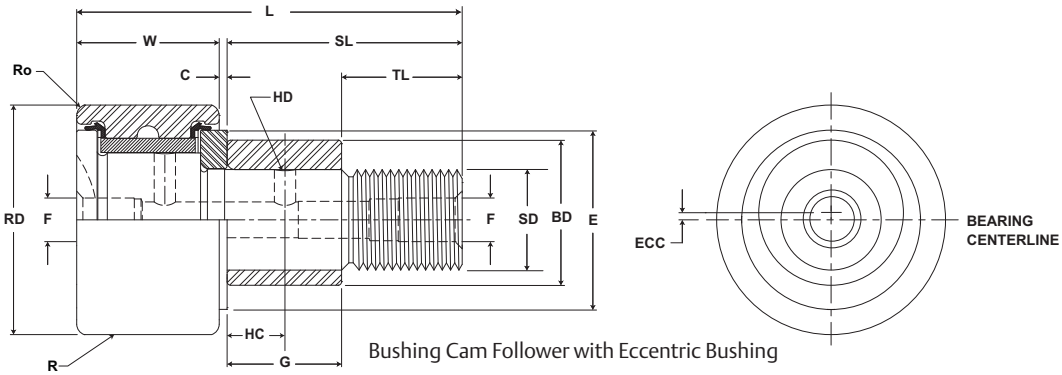

Bushing Cam Follower with Eccentric Bushing

BCF, BCFE

Part No. With LUBRI-DISC Seals	HC Hole Center (Ref) inch mm	HD Radial Hole Diameter (Ref) inch mm	F Axial Hole Dia or Fitting (Ref) inch mm	H Hex Hole (Ref) inch mm	E Min Boss Diameter (Ref) inch mm	Ro Outer Corner Radius (Ref) inch mm	Housing Bore Diameter Nom. inch mm	Housing Bore Diameter Tol. inch mm	Thread Type	Clamping Torque in-lb Nm	Limiting Speed RPM	WT Bearing Weight lb kg
BCF 2 1/2 S BCF 2 1/2 SB BCCF 2 1/2 S BCCF 2 1/2 SB	.56 14.3	.125 3	.1875 4.76	.50 12.7	1.69 42.9	.09 2.4 N/A	1.0003 25.408	+.0002/-.0003 +.0005/-.0008	1-14	2,250 254	See Load-Speed Chart	2.50 1.13
BCFE 2 1/2 S BCFE 2 1/2 SB BCCFE 2 1/2 S BCCFE 2 1/2 SB	.56 14.3	.125 3	.1875 4.76	.50 12.7	1.69 42.9	.09 2.4 N/A	1.378 35.00	+.001/-.001 +.025/-.025	1-14	2,250 254	See Load-Speed Chart	2.50 1.13
BCF 2 3/4 S BCF 2 3/4 SB BCCF 2 3/4 S BCCF 2 3/4 SB	.56 14.3	.125 3	.1875 4.76	.50 12.7	1.69 42.9	.09 2.4 N/A	1.0003 25.408	+.0002/-.0003 +.0005/-.0008	1-14	2,250 254	See Load-Speed Chart	2.93 1.33
BCFE 2 3/4 S BCFE 2 3/4 SB BCCFE 2 3/4 S BCCFE 2 3/4 SB	.56 14.3	.125 3	.1875 4.76	.50 12.7	1.69 42.9	.09 2.4 N/A	1.378 35.00	+.001/-.001 +.025/-.025	1-14	2,250 254	See Load-Speed Chart	2.93 1.33
BCF 3 S BCF 3 SB BCCF 3 S BCCF 3 SB	.63 15.9	.125 3	.25 6.4	.75 19.1	2.13 54.0	.13 3.2 N/A	1.2503 31.758	+.0002/-.0003 +.0005/-.0008	1 1/4-12	3,450 390	See Load-Speed Chart	4.20 1.91
BCFE 3 S BCFE 3 SB BCCFE 3 S BCCFE 3 SB	.63 15.9	.125 3	.25 6.4	.75 19.1	2.13 54.0	.13 3.2 N/A	1.753 44.52	+.001/-.001 +.025/-.025	1 1/4-12	3,450 390	See Load-Speed Chart	4.20 1.91
BCF 3 1/4 S BCF 3 1/4 SB BCCF 3 1/4 S BCCF 3 1/4 SB	.63 15.9	.125 3	.25 6.4	.75 19.1	2.13 54.0	.13 3.2 N/A	1.2503 31.758	+.0002/-.0003 +.0005/-.0008	1 1/4-12	3,450 390	See Load-Speed Chart	4.81 2.18
BCFE 3 1/4 S BCFE 3 1/4 SB BCCFE 3 1/4 S BCCFE 3 1/4 SB	.63 15.9	.125 3	.25 6.4	.75 19.1	2.13 54.0	.13 3.2 N/A	1.753 44.52	+.001/-.001 +.025/-.025	1 1/4-12	3,450 390	See Load-Speed Chart	4.81 2.18

McGILL® Inch Cam Follower Bearings

Basic Construction Type: Stud Type Crowned / Cylindrical Outside Diameter

Rolling Elements: Non-Metallic Bushing

Bearing Material: Bearing Quality Steel

Seal Type: LUBRI-DISC®

Lubrication: None - Self Lubricating Bushing

System Configuration: Concentric / Eccentric

Mounting Feature: Slot / Hex Hole

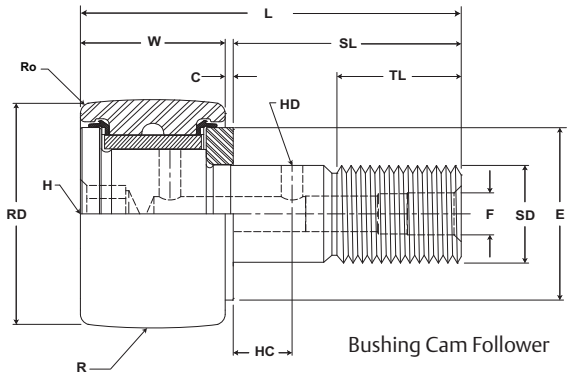

Bushing Cam Follower

BCF, BCFE

Part No.	RD		W		SD		SL	C	TL	L	R	ECC	G	BD	Track Roller Dynamic Rating	Track Roller Static Rating
With LUBRI-DISC Seals	Roller Diameter		Roller Width		Stud Diameter		Stud Length	Endplate Extension	Minimum Thread Length	Length Overall	Crown Prefix BCCF-XX	Eccentric Base Modifier BCFE-XX				
	inch mm		inch mm		inch mm		inch mm		inch mm		inch mm	inch mm			N/lb	N/lb
	Nom.	Tol.	Nom.	Tol.	Nom.	Tol.	(Ref)	(Ref)	(Ref)	(Ref)	Radius	(Ref)	+0/-.001 (+0/-.03)	± .001 (± .03)		
BCF 3 1/2 S BCF 3 1/2 SB BCCF 3 1/2 S BCCF 3 1/2 SB	3.500 88.90	+0/-.001 +0/-.03	2.000 50.80	+0 / -.005 +0 / -.13	1.375 34.93	+.001/-0 +.03/-0	2.75 69.9	.03 .8	2.75 69.9	4.78 121.4	Cylindrical 30 762	N/A	N/A	N/A	See Load-Speed Chart	
BCFE 3 1/2 S BCFE 3 1/2 SB BCCFE 3 1/2 S BCCFE 3 1/2 SB	3.500 88.90	+0/-.001 +0/-.03	2.000 50.80	+0 / -.005 +0 / -.13	1.375 34.93	+.001/-0 +.03/-0	2.75 69.9	.03 .8	2.75 69.9	4.78 121.4	Cylindrical 30 762	.060 .52	.38 34.9	.81 46.0	See Load-Speed Chart	
BCF 4 S BCF 4 SB BCCF 4 S BCCF 4 SB	4.000 101.60	+0/-.001 +0/-.03	2.250 57.15	+0 / -.005 +0 / -.13	1.500 38.10	+.001/-0 +.03/-0	3.50 88.9	.03 .8	3.50 88.9	5.78 146.8	Cylindrical 30 762	N/A	N/A	N/A	See Load-Speed Chart	
BCFE 4 S BCFE 4 SB BCCFE 4 S BCCFE 4 SB	4.000 101.60	+0/-.001 +0/-.03	2.250 57.15	+0 / -.005 +0 / -.13	1.500 38.10	+.001/-0 +.03/-0	3.50 88.9	.03 .8	3.50 88.9	5.78 146.8	Cylindrical 30 762	.060 .52	.00 50.8	.00 50.8	See Load-Speed Chart	

Metric dimensions for reference only.
Not all parts are available from stock. Please contact customer service for availability (800) 626-2120.
For more information on bearing capabilities outside of our standard offering, please contact Application Engineering (800) 626-2093.

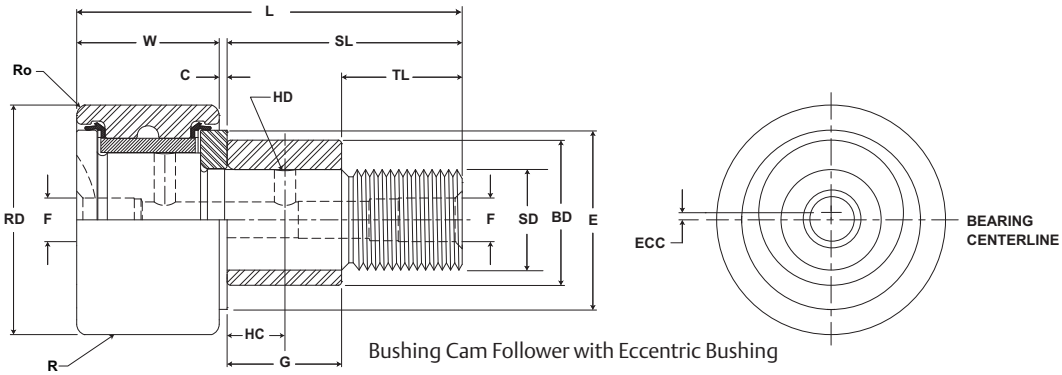

Bushing Cam Follower with Eccentric Bushing

BCF, BCFE

Part No. With LUBRI-DISC Seals	HC Hole Center inch mm (Ref)	HD Radial Hole Diameter inch mm (Ref)	F Axial Hole Dia or Fitting inch mm (Ref)	H Hex Hole inch mm (Ref)	E Min Boss Diameter inch mm (Ref)	Ro Outer Corner Radius inch mm (Ref)	Housing Bore Diameter inch mm Nom.	Housing Bore Diameter inch mm Tol.	Thread Type	Clamping Torque in-lb Nm	Limiting Speed RPM	WT Bearing Weight lb kg
BCF 3 1/2 S BCF 3 1/2 SB BCCF 3 1/2 S BCCF 3 1/2 SB	.69 17.5	.125 3	.25 6.4	.75 19.1	2.44 61.9	.13 3.2 N/A	1.3753 34.933	+.0002/-.0003 +.0005/-.0008	1 3/8-12	4,200 475	See Load-Speed Chart	6.42 2.91
BCFE 3 1/2 S BCFE 3 1/2 SB BCCFE 3 1/2 S BCCFE 3 1/2 SB	.69 17.5	.125 3	.25 6.4	.75 19.1	2.44 61.9	.13 3.2 N/A	1.815 46.10	+.001/-.001 +.025/-.025	1 3/8-12	4,200 475	See Load-Speed Chart	6.42 2.91
BCF 4 S BCF 4 SB BCCF 4 S BCCF 4 SB	.75 19.1	.125 3	.25 6.4	.75 19.1	2.80 71.0	.13 3.2 N/A	1.5003 38.108	+.0002/-.0003 +.0005/-.0008	1 1/2-12	5,000 565	See Load-Speed Chart	9.46 4.29
BCFE 4 S BCFE 4 SB BCCFE 4 S BCCFE 4 SB	.75 19.1	.125 3	.25 6.4	.75 19.1	2.80 71.0	.13 3.2 N/A	2.003 50.85	+.001/-.001 +.025/-.025	1 1/2-12	5,000 565	See Load-Speed Chart	9.46 4.29

McGILL® Inch Cam Follower Bearings

Basic Construction Type: Yoke Type Crowned / Cylindrical Outside Diameter

Rolling Elements: Non-Metallic Bushing

Bearing Material: Bearing Quality Steel

Seal Type: LUBRI-DISC®

Lubrication: None - Self Lubricating Bushing

System Configuration: Concentric / Eccentric / Heavy Stud

Mounting Feature: Slot / Hex Hole

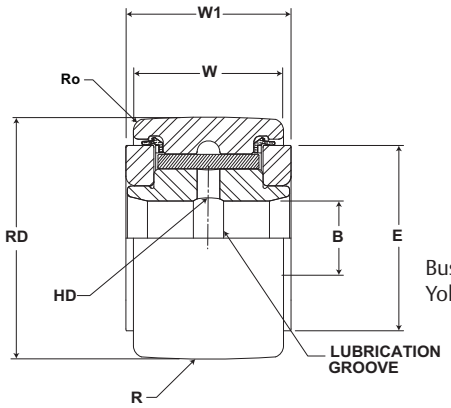

Bushing Cam Yoke Roller

BCYR

Part No.	RD		W		B		W1	R	Track Roller Dynamic Rating	Track Roller Static Rating
With LUBRI-DISC Seals	Roller Diameter		Roller Width		Bore Diameter		Endplate Extension	Crown Prefix BCCYR-XX		
	inch mm		inch mm		inch mm		inch mm		lb/N	lb/N
	Nom.	Tol.	Nom.	Tol.	Nom	Tol	(Ref)	Radius		
BCYR 3/4 S	.750 19.05	+0/-.001 +0/-.03	.500 12.70	+0/-.001 +0/-.03	.250 6.35	+.0002/-.0004 +.0005/-.0010	.56 14.3	Cylindrical	See Load-Speed Chart	
BCCYR 3/4 S								10 254		
BCYR 7/8 S	.875 22.23	+0/-.001 +0/-.03	.500 12.70	+0/-.001 +0/-.03	.250 6.35	+.0002/-.0004 +.0005/-.0010	.56 14.3	Cylindrical	See Load-Speed Chart	
BCCYR 7/8 S								10 254		
BCYR 1 S	1.000 25.40	+0/-.001 +0/-.03	.625 15.88	+0/-.001 +0/-.03	.313 7.94	+.0002/-.0004 +.0005/-.0010	.69 17.5	Cylindrical	See Load-Speed Chart	
BCCYR 1 S								12 305		
BCYR 1 1/8 S	1.125 28.58	+0/-.001 +0/-.03	.625 15.88	+0/-.001 +0/-.03	.313 7.94	+.0002/-.0004 +.0005/-.0010	.69 17.5	Cylindrical	See Load-Speed Chart	
BCCYR 1 1/8 S								12 305		
BCYR 1 1/4 S	1.250 31.75	+0/-.001 +0/-.03	.750 19.05	+0/-.001 +0/-.03	.375 9.53	+.0002/-.0004 +.0005/-.0010	.81 20.6	Cylindrical	See Load-Speed Chart	
BCCYR 1 1/4 S								14 356		
BCYR 1 3/8 S	1.375 34.93	+0/-.001 +0/-.03	.750 19.05	+0/-.001 +0/-.03	.375 9.53	+.0002/-.0004 +.0005/-.0010	.81 20.6	Cylindrical	See Load-Speed Chart	
BCCYR 1 3/8 S								14 356		
BCYR 1 1/2 S	1.500 38.10	+0/-.001 +0/-.03	.875 22.23	+0/-.001 +0/-.03	.438 11.11	+.0002/-.0004 +.0005/-.0010	.94 23.8	Cylindrical	See Load-Speed Chart	
BCCYR 1 1/2 S								20 508		
BCYR 1 5/8 S	1.625 41.28	+0/-.001 +0/-.03	.875 22.23	+0/-.001 +0/-.03	.438 11.11	+.0002/-.0004 +.0005/-.0010	.94 23.8	Cylindrical	See Load-Speed Chart	
BCCYR 1 5/8 S								20 508		
BCYR 1 3/4 S	1.750 44.45	+0/-.001 +0/-.03	1.000 25.40	+0/-.001 +0/-.03	.500 12.70	+.0002/-.0004 +.0005/-.0010	1.06 27.0	Cylindrical	See Load-Speed Chart	
BCCYR 1 3/4 S								20 508		

Metric dimensions for reference only.
Not all parts are available from stock. Please contact customer service for availability (800) 626-2120.
For more information on bearing capabilities outside of our standard offering, please contact Application Engineering (800) 626-2093.

BCYR

Part No.	HC	E	Ro	PF	PFT	PF	PFT	PF	PFT	Limiting Speed	WT
With LUBRI-DISC Seals	Hole Center	Min Boss Diameter	Outer Corner	Recommended Shaft Diameters							Bearing Weight
				Push Fit		Drive Fit		Press Fit			
	inch mm		inch mm	inch mm		inch mm		inch mm		RPM	lb kg
	(Ref)	(Ref)	(Ref)	Nom	Tol	Nom	Tol	Nom	Tol		
BCYR 3/4 S	.25 6.4	.61 15.5	.02 .4	.2495 6.337	±.0002 ±.005	.2495 6.337	±.0002 ±.005	.2495 6.337	±.0002 ±.005	See Load-Speed Chart	.06 .03
BCCYR 3/4 S			N/A								
BCYR 7/8 S	.25 6.4	.61 15.5	.02 .4	.2495 6.337	±.0002 ±.005	.2495 6.337	±.0002 ±.005	.2495 6.337	±.0002 ±.005	See Load-Speed Chart	.08 .04
BCCYR 7/8 S			N/A								
BCYR 1 S	.25 6.4	.78 19.8	.03 .8	.3120 7.925	±.0002 ±.005	.3120 7.925	±.0002 ±.005	.3120 7.925	±.0002 ±.005	See Load-Speed Chart	.15 .07
BCCYR 1 S			N/A								
BCYR 1 1/8 S	.25 6.4	.78 19.8	.03 .8	.3120 7.925	±.0002 ±.005	.3120 7.925	±.0002 ±.005	.3120 7.925	±.0002 ±.005	See Load-Speed Chart	.17 .08
BCCYR 1 1/8 S			N/A								
BCYR 1 1/4 S	.31 7.9	.98 25.0	.03 .8	.3745 9.512	±.0002 ±.005	.3745 9.512	±.0002 ±.005	.3745 9.512	±.0002 ±.005	See Load-Speed Chart	.24 .11
BCCYR 1 1/4 S			N/A								
BCYR 1 3/8 S	.31 7.9	.98 25.0	.05 1.2	.3745 9.512	±.0002 ±.005	.3745 9.512	±.0002 ±.005	.3745 9.512	±.0002 ±.005	See Load-Speed Chart	.30 .14
BCCYR 1 3/8 S			N/A								
BCYR 1 1/2 S	.38 9.5	1.09 27.8	.06 1.6	.4370 11.100	±.0002 ±.005	.4370 11.100	±.0002 ±.005	.4370 11.100	±.0002 ±.005	See Load-Speed Chart	.41 .19
BCCYR 1 1/2 S			N/A								
BCYR 1 5/8 S	.38 9.5	1.09 27.8	.06 1.6	.4370 11.100	±.0002 ±.005	.4370 11.100	±.0002 ±.005	.4370 11.100	±.0002 ±.005	See Load-Speed Chart	.50 .23
BCCYR 1 5/8 S			N/A								
BCYR 1 3/4 S	.44 11.1	1.25 31.8	.06 1.6	.4995 12.687	±.0002 ±.005	.4995 12.687	±.0002 ±.005	.4995 12.687	±.0002 ±.005	See Load-Speed Chart	.64 .29
BCCYR 1 3/4 S			N/A								

McGILL® Inch Cam Follower Bearings

Basic Construction Type: Yoke Type Crowned / Cylindrical Outside Diameter

Rolling Elements: Non-Metallic Bushing

Bearing Material: Bearing Quality Steel

Seal Type: LUBRI-DISC®

Lubrication: None - Self Lubricating Bushing

System Configuration: Concentric / Eccentric / Heavy Stud

Mounting Feature: Slot / Hex Hole

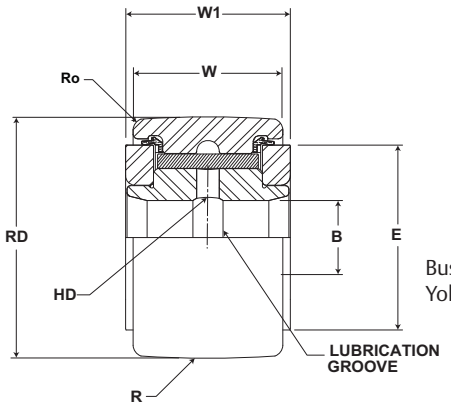

Bushing Cam Yoke Roller

BCYR

Part No.	RD		W		B		W1	R	Track Roller Dynamic Rating	Track Roller Static Rating
With LUBRI-DISC Seals	Roller Diameter		Roller Width		Bore Diameter		Endplate Extension	Crown Prefix BCCYR-XX		
	inch mm		inch mm		inch mm		inch mm		lb/N	lb/N
	Nom.	Tol.	Nom.	Tol.	Nom	Tol	(Ref)	Radius		
BCYR 1 7/8 S	1.875 47.63	+0/-.001 +0/-.03	1.000 25.40	+0/-.001 +0/-.03	.500 12.70	+.0002/-.0004 +.0005/-.0010	1.06 27.0	Cylindrical	See Load-Speed Chart	
BCCYR 1 7/8 S								20 508		
BCYR 2 S	2.000 50.80	+0/-.001 +0/-.03	1.250 31.75	+0/-.001 +0/-.03	.625 15.88	+.0002/-.0004 +.0005/-.0010	1.31 33.3	Cylindrical	See Load-Speed Chart	
BCCYR 2 S								24 610		
BCYR 2 1/4 S	2.250 57.15	+0/-.001 +0/-.03	1.250 31.75	+0/-.001 +0/-.03	.625 15.88	+.0002/-.0004 +.0005/-.0010	1.31 33.3	Cylindrical	See Load-Speed Chart	
BCCYR 2 1/4 S								24 610		
BCYR 2 1/2 S	2.500 63.50	+0/-.001 +0/-.03	1.500 38.10	+0/-.001 +0/-.03	.750 19.05	+.0002/-.0004 +.0005/-.0010	1.56 39.7	Cylindrical	See Load-Speed Chart	
BCCYR 2 1/2 S								30 762		
BCYR 2 3/4 S	2.750 69.85	+0/-.001 +0/-.03	1.500 38.10	+0/-.001 +0/-.03	.750 19.05	+.0002/-.0004 +.0005/-.0010	1.56 39.7	Cylindrical	See Load-Speed Chart	
BCCYR 2 3/4 S								30 762		
BCYR 3 S	3.000 76.20	+0/-.001 +0/-.03	1.750 44.45	+0/-.001 +0/-.03	1.000 25.40	+.0001/-.0005 +.0003/-.0013	1.81 46.0	Cylindrical	See Load-Speed Chart	
BCCYR 3 S								30 762		
BCYR 3 1/4 S	3.250 82.55	+0/-.001 +0/-.03	1.750 44.45	+0/-.001 +0/-.03	1.000 25.40	+.0001/-.0005 +.0003/-.0013	1.81 46.0	Cylindrical	See Load-Speed Chart	
BCCYR 3 1/4 S								30 762		
BCYR 3 1/2 S	3.500 88.90	+0/-.001 +0/-.03	2.000 50.80	+0/-.001 +0/-.03	1.125 28.58	+.0001/-.0005 +.0003/-.0013	2.06 52.4	Cylindrical	See Load-Speed Chart	
BCCYR 3 1/2 S								30 762		
BCYR 4 S	4.000 101.60	+0/-.001 +0/-.03	2.250 57.15	+0/-.001 +0/-.03	1.250 31.75	+.0001/-.0005 +.0003/-.0013	2.06 52.4	Cylindrical	See Load-Speed Chart	
BCCYR 4 S								30 762		

Metric dimensions for reference only.
Not all parts are available from stock. Please contact customer service for availability (800) 626-2120.
For more information on bearing capabilities outside of our standard offering, please contact Application Engineering (800) 626-2093.

BCYR

Part No.	HC	E	Ro	PF	PFT	PF	PFT	PF	PFT	Limiting Speed	WT
With LUBRI-DISC Seals	Hole Center	Min Boss Diameter	Outer Corner	Recommended Shaft Diameters							Bearing Weight
				Push Fit		Drive Fit		Press Fit			
	inch mm		inch mm	inch mm		inch mm		inch mm		RPM	lb kg
	(Ref)	(Ref)	(Ref)	Nom	Tol	Nom	Tol	Nom	Tol		
BCYR 1 7/8 S	.44 11.1	1.25 31.8	.06 1.6	.4995 12.687	±.0002 ±.005	.4995 12.687	±.0002 ±.005	.4995 12.687	±.0002 ±.005	See Load-Speed Chart	.80 .36
BCCYR 1 7/8 S			N/A								
BCYR 2 S	.50 12.7	1.41 35.7	.09 2.4	.6245 15.862	±.0002 ±.005	.6245 15.862	±.0002 ±.005	.6245 15.862	±.0002 ±.005	See Load-Speed Chart	1.05 .48
BCCYR 2 S			N/A								
BCYR 2 1/4 S	.50 12.7	1.41 35.7	.09 2.4	.6245 15.862	±.0002 ±.005	.6245 15.862	±.0002 ±.005	.6245 15.862	±.0002 ±.005	See Load-Speed Chart	1.32 .59
BCCYR 2 1/4 S			N/A								
BCYR 2 1/2 S	.56 14.3	1.69 42.9	.09 2.4	.7495 19.037	±.0002 ±.005	.7495 19.037	±.0002 ±.005	.7495 19.037	±.0002 ±.005	See Load-Speed Chart	1.80 .82
BCCYR 2 1/2 S			N/A								
BCYR 2 3/4 S	.56 14.3	1.69 42.9	.09 2.4	.7495 19.037	±.0002 ±.005	.7495 19.037	±.0002 ±.005	.7495 19.037	±.0002 ±.005	See Load-Speed Chart	2.25 1.02
BCCYR 2 3/4 S			N/A								
BCYR 3 S	.63 15.9	2.13 54.0	.13 3.2	.9994 25.385	±.0002 ±.005	.9994 25.385	±.0002 ±.005	.9994 25.385	±.0002 ±.005	See Load-Speed Chart	3.10 1.41
BCCYR 3 S			N/A								
BCYR 3 1/4 S	.63 15.9	2.13 54.0	.13 3.2	.9994 25.385	±.0002 ±.005	.9994 25.385	±.0002 ±.005	.9994 25.385	±.0002 ±.005	See Load-Speed Chart	3.62 1.64
BCCYR 3 1/4 S			N/A								
BCYR 3 1/2 S	.69 17.5	2.44 61.9	.13 3.2	1.1244 28.560	±.0002 ±.005	1.1244 28.560	±.0002 ±.005	1.1244 28.560	±.0002 ±.005	See Load-Speed Chart	4.95 2.25
BCCYR 3 1/2 S			N/A								
BCYR 4 S	.75 19.1	2.80 71.0	.13 3.2	1.2494 31.735	±.0002 ±.005	1.2494 31.735	±.0002 ±.005	1.2494 31.735	±.0002 ±.005	See Load-Speed Chart	7.05 3.19
BCCYR 4 S			N/A								

McGill Metric Cam Followers

McGill Metric CAMROL bearings are available with either a full complement, or caged (retainer type) set of needles featuring black oxide treated bearing steel while conforming to ISO standard envelope dimensions for use mechanical automation or linear motion applications. Our basic features each contribute to improved performance, while the LUBRI-DISC® seal option helps prevent metal to metal contact within the bearing while providing a barrier for contaminant entry and allow venting of excess or old grease during lubrication. In addition to the seal option these bearings are available with several dimensional choices and combinations to provide a solution specific for the application. Within the following section you can learn more about these features and how they can be applied to your application.

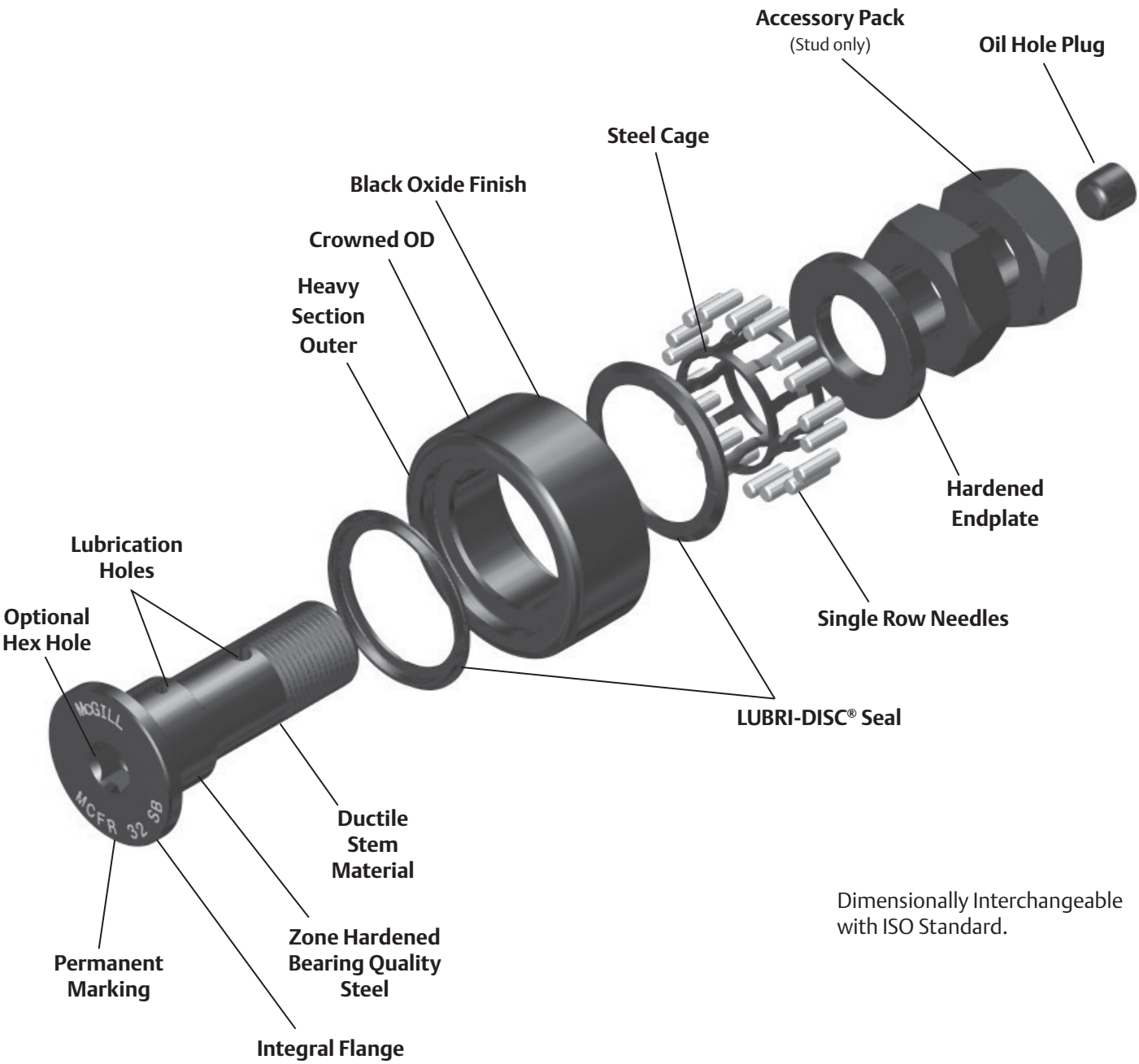

Dimensionally Interchangeable with ISO Standard.

Cam Follower Metric Nomenclature

Basic Type, Construction
- MCF - Metric Cam Follower
- MCYR - Metric Cam Yoke Roller

Construction Suffix
- R - Retained (Caged) Rolling Elements
- E - Eccentric Bushing

Size
- Metric Stud Type: O.D. In mm
- Metric Yoke Type: Bore In mm
- A - Asian Dimensional Standard

Optional Suffix
- S - LUBRI-DISC® Seal
- B - Broach (Hex Hole)
- X - Cylindrical O.D.

MCF R - 35 - B

Features and Benefits

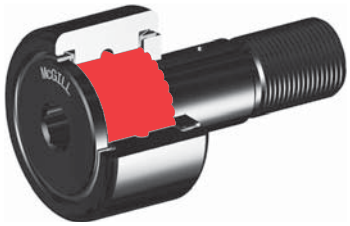

Single Row Full Complement Needle Rollers

The needle roller diameter, length, and number have been optimized to provide a high dynamic and static load rating, contained within industry standard bearing envelope dimensions.

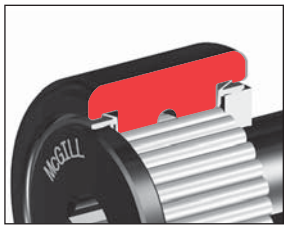

Heavy Section Outer

The heavy section outer helps support radial loading and provide proper rolling element support.

Cylindrical Outside Diameter (OD)

The cylindrical OD can improve performance in certain applications such as improved track capacity by maximizing the contact area with the track.

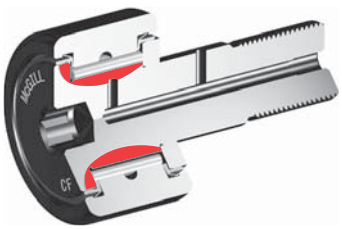

Zone Hardened Raceways

Heat treatment used to precisely harden working surfaces of the raceway and flange. The hardened surfaces provide support for the rolling element contact stresses, while keeping the core of the inner ductile to help absorb shock loads.

Features and Benefits continued

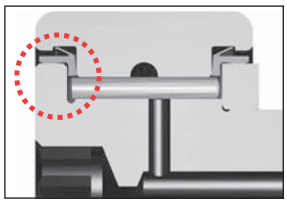

Integral Flange - Stud Type

The integral flange helps maintain bearing integrity throughout the bearing life. Zone hardened to provide wear resistance from incidental contact with the outer or rollers, and provides a sealing surface with LUBRI-DISC® seal option.

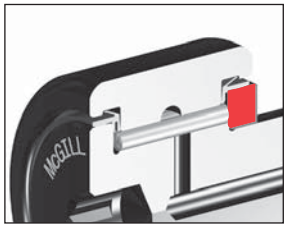

Hardened Endplate

The endplate provides a locating shoulder when mounting the stud or yoke style cam follower. Also, similar to the flange, the endplate must resist wear from incidental contact with the outer or rollers. The hardened and ground endplate provides a sealing surface with LUBRI-DISC® seal option.

Roll Formed Threads - Stud Type

Roll forming is the process used to produce threads. By moving the material into shape instead of cutting the threads, the threads are produced to meet class 6G tolerances and are work hardened resulting in improved holding power. Available in both Asian (with “A” suffix) or European Metric as standard.

Factory Grease Fill

The cam follower and cam yoke roller bearings are factory lubricated with a medium temperature grease. Contact Application Engineering when application conditions require special lubricants.

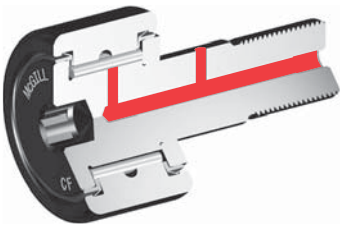

Lubrication Holes

Most sizes of McGill CAMROL bearings include lubrication hole(s) to accept a standard drive fitting or an included plug. The oil hole plug is recommended for closing unused lubrication hole to help protect against bearing contamination or lubrication loss.

McGill CAMROL Yoke roller bearings include a lubrication hole to provide a passage for lubrication to the rolling elements from the yoke roller bore. The customer supplied shaft must provide an axial lubrication path to supply bearing.

Features and Benefits continued

Black Oxide Finish

Bearings have a black oxide finish on all external surfaces.

Permanent Marking

Part number permanently marked on bearing face, helps bearing identification after years of service.

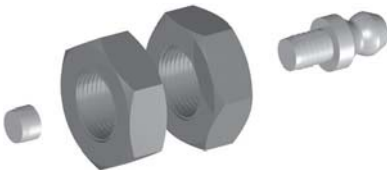

Installation Accessory Pack

All McGill Metric Cam followers include (2) jam nuts to ensure proper thread type (Asian / European), Fitting and plug to help provide proper lubrication path to the rolling elements and prevent contamination from entering the bearing through a unused hole.

Options

Retainer Type

The retainer (cage) option provides heat-treated steel cage for improved durability and wear resistance. The needle separation produces larger lubrication reservoir and helps achieve higher bearing speeds.. The cages are designed with two rollers per pockets (except 13, 16 and 19mm OD's) to help improve static and dynamic load ratings.

Options

LUBRI-DISC® Seal

The CAMROL standard for seals, the LUBRI-DISC seal not only helps keep contaminants out and lubrication in the bearing, but with an integral back plate to separate the metal to metal contact between the outer ring and endplate(s) or flange. The back plate feature reduce friction resulting in lower operating temperatures which can extend grease life and allowing for higher operating speeds Our seal also includes vents to help prevent seal blowout during relubrication. The LUBRI-DISC seal option has a good balance of sealing and low drag operation essential to a precision cam follower suited for most industrial applications.

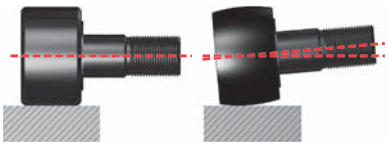

Crowned Outside Diameter (OD)

A crown on the OD of a cam follower bearing can help increase bearing life versus a standard cylindrical cam follower. The crown achieves this performance by helping to distribute the stress on the outer ring and rolling elements resulting from misalignment due to mounting inaccuracy or stud deflection. The crown may also help reduce outer skidding in turntable or rotary applications. Not all applications may see the benefit of a crowned OD, consult Application Engineering for guidance for your application.

Hex Hole (Broached)

The hex hole can aide in the installation and removal of stud type cam followers by a more positive hold on the cam follower stud versus a standard screw driver slot. The hex feature is identified with a “B” since it is produced using a broach process. Bearing relubrication from flange end must be considered for sizes under 3”.

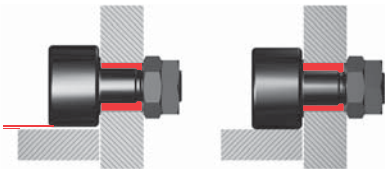

Eccentric Stud

Eccentric stud option provides a means of adjusting the radial position of the bearing, which can improve the load sharing of inline bearing combinations. Cam follower load sharing helps reduce operation costs by reducing premature failures due to overloaded bearings, the need of precise mounting hole location tolerances and providing ability to realign bearing due to track wear. Eccentric bushing is press fit on stud and unhardened to permit dowel or setscrew for permanent locking.

Additional Options

BHT

Broached (Hex) hole at threaded end of cam follower stud.

THT

Threaded axial lubrication hole at threaded end of cam follower stud.

THF

Threaded axial lubrication hole at flanged end of cam follower stud. Available with all screw driver slot cam followers or broached cam followers over 3”.

THB

Threaded axial oil hole on both ends of cam follower stud. Available with all screw driver slot cam followers or broached cam followers over 3”.

ALG

Annular lubrication groove at cam follower stem radial lubrication hole.

Custom Capabilities

- *Customer specified factory grease fill*
- *Grease fitting installed*
- *Stud or thread length modifications*
- *Roller diameter variations or tolerances*
- *Cam followers grouped or matched diameter tolerance / run out sets*
- *Custom engineered to order designs*

McGILL® Metric CAMROL Bearings

Basic Construction Type: Stud Type Crowned / Cylindrical Outside Diameter

Rolling Elements: Full Complement / Retained (Caged) Needle Roller

Bearing Material: Bearing Quality Steel

Seal Type: LUBRI-DISC®

Lubrication: Lithium Soap Grease NLGI #2

System Configuration: Concentric / Eccentric

Mounting Feature: Slot / Hex Hole

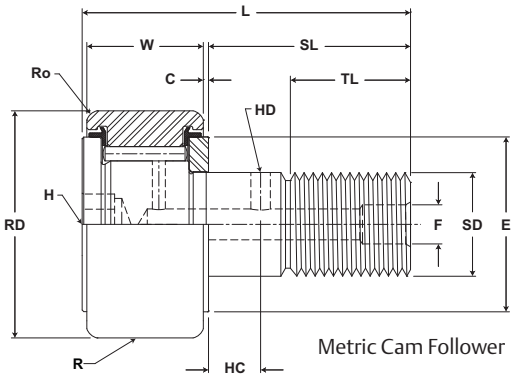

Metric Cam Follower

MCF, MCFE

Part No. W/O Seals	Part No. With LUBRI-DISC Seals	RD Roller Diameter mm inch Nom.	RD Roller Diameter mm inch Tol.	W Roller Width mm inch Nom.	W Roller Width mm inch Tol.	SD Stud Diameter mm inch Nom.	SD Stud Diameter mm inch Tol.	SL Stud Length mm inch (Ref)	C Endplate Extension mm inch (Ref)	TL Minimum Thread Length mm inch (Ref)	L Length Overall mm inch (Ref)	R Cylindrical Suffix MCF-xx-X mm inch Radius	ECC Eccentric Base Modifier MCFE-xx mm inch (Ref)	G Eccentric Base Modifier MCFE-xx mm inch +05/-.15 +.002/-.006	BD Eccentric Base Modifier MCFE-xx mm inch (Ref)	Track Roller Dynamic Rating N/lb	Track Roller Static Rating N/lb
MCFR 13 MCFR 13 B MCFR 13 X MCFR 13 BX	MCFR 13 S MCFR 13 SB MCFR 13 SX MCFR 13 SBX	13.000 .5118	+0/-.050 +0/-.002 +0/-.008 +0/-.0003	9.000 .3543	0/-0.12 +0/-0.005	5.000 .1969	+0/-.012 +0/-.0005	13 .5	.60 .024	7.5 .30	23 .9	500 19.7 Cylindrical	N/A	N/A	N/A	2,060 463	1,650 371
MCF 16 MCF 16 B MCF 16 X MCF 16 BX	MCF 16 S MCF 16 SB MCF 16 SX MCF 16 SBX	16.000 .6299	+0/-.050 +0/-.002 +0/-.008 +0/-.0003	11.000 .4331	0/-0.12 +0/-0.005	6.000 .2362	+0/-.012 +0/-.0005	16 .6	.60 .024	9.0 .35	28 1.1	500 19.7 Cylindrical	N/A	N/A	N/A	5,790 1,302	2,350 528
MCFE 16	MCFE 16 S MCFE 16 SB MCFE 16 SX MCFE 16 SBX	16.000 .6299	+0/-.050 +0/-.002 +0/-.008 +0/-.0003	11.000 .4331	0/-0.12 +0/-0.005	6.000 .2362	+0/-.012 +0/-.0005	16 .6	.60 .024	9.0 .35	28 1.1	500 19.7 Cylindrical	0.5 .02	7 0.27	9 .35		
MCFR 16 MCFR 16 B MCFR 16 X MCFR 16 BX	MCFR 16 S MCFR 16 SB MCFR 16 SX MCFR 16 SBX	16.000 .6299	+0/-.050 +0/-.002 +0/-.008 +0/-.0003	11.000 .4331	0/-0.12 +0/-0.005	6.000 .2362	+0/-.012 +0/-.0005	16 .6	.60 .024	9.0 .35	28 1.1	500 19.7 Cylindrical	N/A	N/A	N/A	3,430 771	2,350 528
MCFRE 16	MCFRE 16 S MCFRE 16 SB MCFRE 16 SX MCFRE 16 SBX	16.000 .6299	+0/-.050 +0/-.002 +0/-.008 +0/-.0003	11.000 .4331	0/-0.12 +0/-0.005	6.000 .2362	+0/-.012 +0/-.0005	16 .6	.60 .024	9.0 .35	28 1.1	500 19.7 Cylindrical	0.5 .02	7 0.27	9 .35		
MCF 19 MCF 19 B MCF 19 X MCF 19 BX	MCF 19 S MCF 19 SB MCF 19 SX MCF 19 SBX	19.000 .7480	+0/-.050 +0/-.002 +0/-.009 +0/-.0004	11.000 .4331	+0/-.12 +0/-.005	8.000 .3150	+0/-.015 +0/-.0006	20 .8	.60 .024	11.0 .43	32 1.3	500 19.7 Cylindrical	N/A	N/A	N/A	6,670 1,500	5,100 1,147
MCFE 19	MCFE 19 S MCFE 19 SB MCFE 19 SX MCFE 19 SBX	19.000 .7480	+0/-.050 +0/-.002 +0/-.009 +0/-.0004	11.000 .4331	+0/-.12 +0/-.005	8.000 .3150	+0/-.015 +0/-.0006	20 .8	.60 .024	11.0 .43	32 1.3	500 19.7 Cylindrical	0.5 .02	9 0.35	11 .43		
MCFR 19 MCFR 19 B MCFR 19 X MCFR 19 BX	MCFR 19 S MCFR 19 SB MCFR 19 SX MCFR 19 SBX	19.000 .7480	+0/-.050 +0/-.002 +0/-.009 +0/-.0004	11.000 .4331	+0/-.12 +0/-.005	8.000 .3150	+0/-.015 +0/-.0006	20 .8	.60 .024	11.0 .43	32 1.3	500 19.7 Cylindrical	N/A	N/A	N/A	3,730 839	4,140 931
MCFRE 19	MCFRE 19 S MCFRE 19 SB MCFRE 19 SX MCFRE 19 SBX	19.000 .7480	+0/-.050 +0/-.002 +0/-.009 +0/-.0004	11.000 .4331	+0/-.12 +0/-.005	8.000 .3150	+0/-.015 +0/-.0006	20 .8	.60 .024	11.0 .43	32 1.3	500 19.7 Cylindrical	0.5 .02	9 0.35	11 .43		

1. Standard bearing has a crowned roller outside diameter. For straight cylindrical outside roller diameter, add suffix "X". Example - MCFR-35-X or MCF-35-SX.
2. Clamping torque is based on dry threads. If threads are lubricated, use half of value shown.
3. Static load rating is based on stud strength or on internal rolling element load distribution stresses.

Inch dimensions for reference only.

Metric CAMROL Bearings

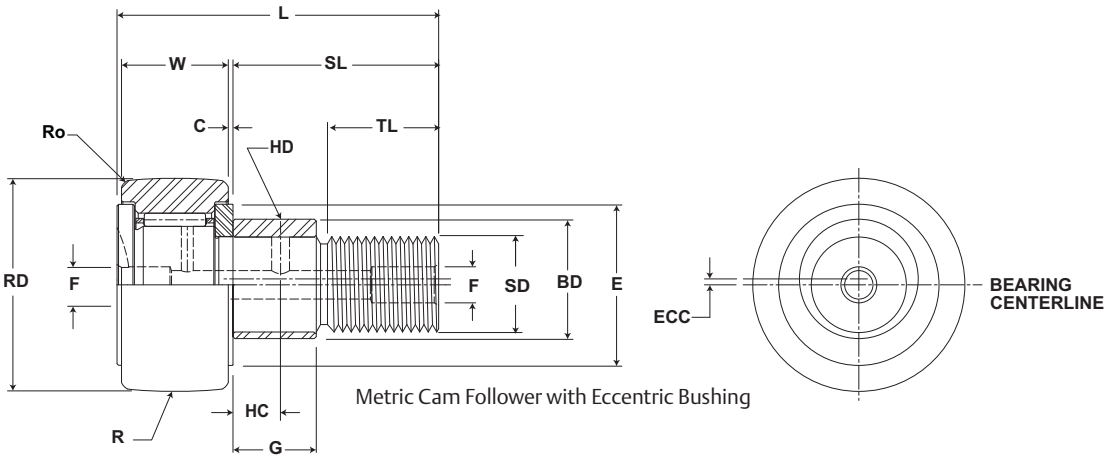

Metric Cam Follower with Eccentric Bushing

MCF, MCFE

Part No.		HC	HD	F	H	Ro	E	Housing Bore Diameter		Thread Type	Clamping Torque	Limiting Speed (Grease)	WT
W/O Seals	With LUBRI-DISC Seals	Hole Center	Radial Lub. Hole Diameter	Lub. Hole Dia	Hex Hole Suffix MCF_xx B	Outer Corner	Min. Clamping Diameter						Bearing Weight
		mm inch		mm inch		mm inch		mm inch			Nm in-lb	RPM	kg lb
		(Ref)	(Ref)	(Ref)	(Ref)	(Ref)	(Ref)	Nom.	Tol.				
MCFR 13	MCFR 13 S	-	-	3.1 .12	N/A	.3 .01	9 .4	5.000 .1969	+.012/-0 +.0005/- 0	M5x0.8	2.2 19	20,000	.01 .02
MCFR 13 B	MCFR 13 SB			-	3.1 .12								
MCFR 13 X	MCFR 13 SX			3.1 .12	N/A								
MCFR 13 BX	MCFR 13 SBX			-	3.1 .12								
MCF 16	MCF 16 S	-	-	4 .16	N/A	.3 .01	11 .4	6.000 .2362	+.012/-0 +.0005/- 0	M6x1	3 27	13,000	.02 .04
MCF 16 B	MCF 16 SB			-	4 .16								
MCF 16 X	MCF 16 SX			4 .16	N/A								
MCF 16 BX	MCF 16 SBX			-	4 .16								
MCFE 16	MCFE 16 S	-	-	4 .16	N/A	.3 .01	11 .4	11.050 .4350	+0.025/-0 +0.0009/- 0	M6x1	3 27	13,000	.02 .04
	MCFE 16 SB			-	4 .16								
	MCFE 16 SX			4 .16	N/A								
	MCFE 16 SBX			-	4 .16								
MCFR 16	MCFR 16 S	-	-	4 .16	N/A	.3 .01	11 .4	6.000 .2362	+.012/-0 +.0005/- 0	M6x1	3 27	19,500	.02 .04
MCFR 16 B	MCFR 16 SB			-	4 .16								
MCFR 16 X	MCFR 16 SX			4 .16	N/A								
MCFR 16 BX	MCFR 16 SBX			-	4 .16								
MCFRE 16	MCFRE 16 S	-	-	4 .16	N/A	.3 .01	11 .4	11.050 .4350	+.012/-0 +.0005/- 0	M6x1	3 27	19,500	.02 .04
	MCFRE 16 SB			-	4 .16								
	MCFRE 16 SX			4 .16	N/A								
	MCFRE 16 SBX			-	4 .16								
MCF 19	MCF 19 S	-	-	4 .16	N/A	.3 .01	13 .5	8.000 .3150	+.015/-0 +.0006/- 0	M8x1.25	8 71	10,500	.03 .07
MCF 19 B	MCF 19 SB			-	4 .16								
MCF 19 X	MCF 19 SX			4 .16	N/A								
MCF 19 BX	MCF 19 SBX			-	4 .16								
MCFE 19	MCFE 19 S	-	-	4 .16	N/A	.3 .01	13 .5	13.050 .5138	+0.025/-0 +0.0009/- 0	M8x1.25	8 71	10,500	.03 .07
	MCFE 19 SB			-	4 .16								
	MCFE 19 SX			4 .16	N/A								
	MCFE 19 SBX			-	4 .16								
MCFR 19	MCFR 19 S	-	-	4 .16	N/A	.3 .01	13 .5	8.000 .3150	+.015/-0 +.0006/- 0	M8x1.25	8 71	15,500	.03 .07
MCFR 19 B	MCFR 19 SB			-	4 .16								
MCFR 19 X	MCFR 19 SX			4 .16	N/A								
MCFR 19 BX	MCFR 19 SBX			-	4 .16								
MCFRE 19	MCFRE 19 S	-	-	4 .16	N/A	.3 .01	13 .5	13.050 .5138	+.015/-0 +.0006/- 0	M8x1.25	8 71	15,500	.03 .07
	MCFRE 19 SB			-	4 .16								
	MCFRE 19 SX			4 .16	N/A								
	MCFRE 19 SBX			-	4 .16								

4. Dynamic load should not exceed 50% of Dynamic Rating as a track roller.

5. Since load, lubrication method, temperature and other factors affect the maximum operating speed, it is impossible to determine precise limiting speed. The listed limiting speeds are based on lightly loaded bearings having adequate lubrication and are listed only as a design guide. More frequent relubrication is required when operating at higher speeds. Actual bearing testing in the specific application should be conducted if the anticipated operating speed approaches the listed limiting speed.

* Sizes 13 - 19 have no lube holes in the threaded end of the stud.

McGILL® Metric CAMROL Bearings

Basic Construction Type: Stud Type Crowned / Cylindrical Outside Diameter

Rolling Elements: Full Complement / Retained (Caged) Needle Roller

Bearing Material: Bearing Quality Steel

Seal Type: LUBRI-DISC®

Lubrication: Lithium Soap Grease NLGI #2

System Configuration: Concentric / Eccentric

Mounting Feature: Slot / Hex Hole

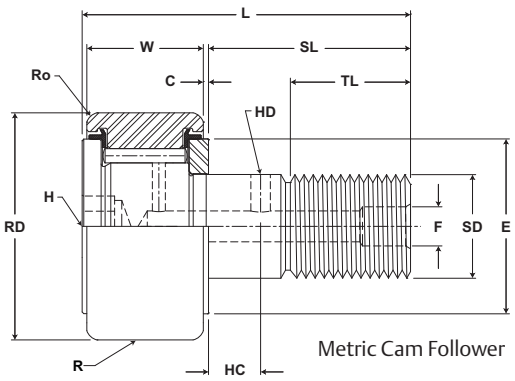

Metric Cam Follower

MCF, MCFE

Part No. W/O Seals	Part No. With LUBRI-DISC Seals	RD Roller Diameter mm inch Nom.	RD Roller Diameter mm inch Tol.	W Roller Width mm inch Nom.	W Roller Width mm inch Tol.	SD Stud Diameter mm inch Nom.	SD Stud Diameter mm inch Tol.	SL Stud Length mm inch (Ref)	C Endplate Extension mm inch (Ref)	TL Minimum Thread Length mm inch (Ref)	L Length Overall mm inch (Ref)	R Cylindrical Suffix MCF-xx-X mm inch Radius	ECC Eccentric Base Modifier MCFE-xx mm inch (Ref)	G Eccentric Base Modifier MCFE-xx mm inch +05/-.15 +.002/-.006	BD Eccentric Base Modifier MCFE-xx mm inch (Ref)	Track Roller Dynamic Rating N/lb	Track Roller Static Rating N/lb
MCF 22 MCF 22 B MCF 22 X MCF 22 BX	MCF 22 S MCF 22 SB MCF 22 SX MCF 22 SBX	22.000 .8661	+0/-.050 +0/-.002 +0/-.009 +0/-.0004	12.000 .4724	+0/-.12 +0/-.005	10.000 .3937	+0/-.015 +0/-.0006	23 .9	.60 .024	12.0 .47	36 1.4	500 19.7 Cylindrical	N/A	N/A	N/A	7,850 1,765	10,400 2,338
MCFE 22	MCFE 22 S MCFE 22 SB MCFE 22 SX MCFE 22 SBX	22.000 .8661	+0/-.050 +0/-.002 +0/-.009 +0/-.0004	12.000 .4724	+0/-.12 +0/-.005	10.000 .3937	+0/-.015 +0/-.0006	23 .9	.60 .024	12.0 .47	36 1.4	500 19.7 Cylindrical	0.5 .02	10 0.39	13 .51		
MCFR 22 MCFR 22 B MCFR 22 X MCFR 22 BX	MCFR 22 S MCFR 22 SB MCFR 22 SX MCFR 22 SBX	22.000 .8661	+0/-.050 +0/-.002 +0/-.009 +0/-.0004	12.000 .4724	+0/-.12 +0/-.005	10.000 .3937	+0/-.015 +0/-.0006	23 .9	.60 .024	12.0 .47	36 1.4	500 19.7 Cylindrical	N/A	N/A	N/A	5,200 1,169	6,050 1,360
MCFRE 22	MCFRE 22 S MCFRE 22 SB MCFRE 22 SX MCFRE 22 SBX	22.000 .8661	+0/-.050 +0/-.002 +0/-.009 +0/-.0004	12.000 .4724	+0/-.12 +0/-.005	10.000 .3937	+0/-.015 +0/-.0006	23 .9	.60 .024	12.0 .47	36 1.4	500 19.7 Cylindrical	0.5 .02	10 0.39	13 .51		
MCF 22A MCF 22A B MCF 22A X MCF 22A BX	MCF 22A S MCF 22A SB MCF 22A SX MCF 22A SBX	22.000 .8661	+0/-.050 +0/-.002 +0/-.009 +0/-.0004	12.000 .4724	+0/-.12 +0/-.005	10.000 .3937	+0/-.015 +0/-.0006	23 .9	.60 .024	13.0 .51	36 1.4	500 19.7 Cylindrical	N/A	N/A	N/A	7,850 1,765	10,400 2,338
MCFE 22A	MCFE 22A S MCFE 22A SB MCFE 22A SX MCFE 22A SBX	22.000 .8661	+0/-.050 +0/-.002 +0/-.009 +0/-.0004	12.000 .4724	+0/-.12 +0/-.005	10.000 .3937	+0/-.015 +0/-.0006	23 .9	.60 .024	13.0 .51	36 1.4	500 19.7 Cylindrical	0.5 .02	10 0.39	13 .51		
MCFR 22A MCFR 22A B MCFR 22A X MCFR 22A BX	MCFR 22A S MCFR 22A SB MCFR 22A SX MCFR 22A SBX	22.000 .8661	+0/-.050 +0/-.002 +0/-.009 +0/-.0004	12.000 .4724	+0/-.12 +0/-.005	10.000 .3937	+0/-.015 +0/-.0006	23 .9	.60 .024	13.0 .51	36 1.4	500 19.7 Cylindrical	N/A	N/A	N/A	5,200 1,169	6,050 1,360
MCFRE 22A	MCFRE 22A S MCFRE 22A SB MCFRE 22A SX MCFRE 22A SBX	22.000 .8661	+0/-.050 +0/-.002 +0/-.009 +0/-.0004	12.000 .4724	+0/-.12 +0/-.005	10.000 .3937	+0/-.015 +0/-.0006	23 .9	.60 .024	13.0 .51	36 1.4	500 19.7 Cylindrical	0.5 .02	10 0.39	13 .51		

1. Standard bearing has a crowned roller outside diameter. For straight cylindrical outside roller diameter, add suffix "X". Example - MCFR-35-X or MCF-35-SX.
2. Clamping torque is based on dry threads. If threads are lubricated, use half of value shown.
3. Static load rating is based on stud strength or on internal rolling element load distribution stresses.
4. Dynamic load should not exceed 50% of Dynamic Rating as a track roller.
5. Since load, lubrication method, temperature and other factors affect the maximum operating speed, it is impossible to determine precise limiting speed. The listed limiting speeds are based on lightly loaded bearings having adequate lubrication and are listed only as a design guide. More frequent relubrication is required when operating at higher speeds. Actual bearing testing in the specific application should be conducted if the anticipated operating speed approaches the listed limiting speed.

Inch dimensions for reference only.
Not all parts are available from stock. Please contact customer service for availability (800) 626-2120.
For more information on bearing capabilities outside of our standard offering, please contact Application Engineering (800) 626-2093.

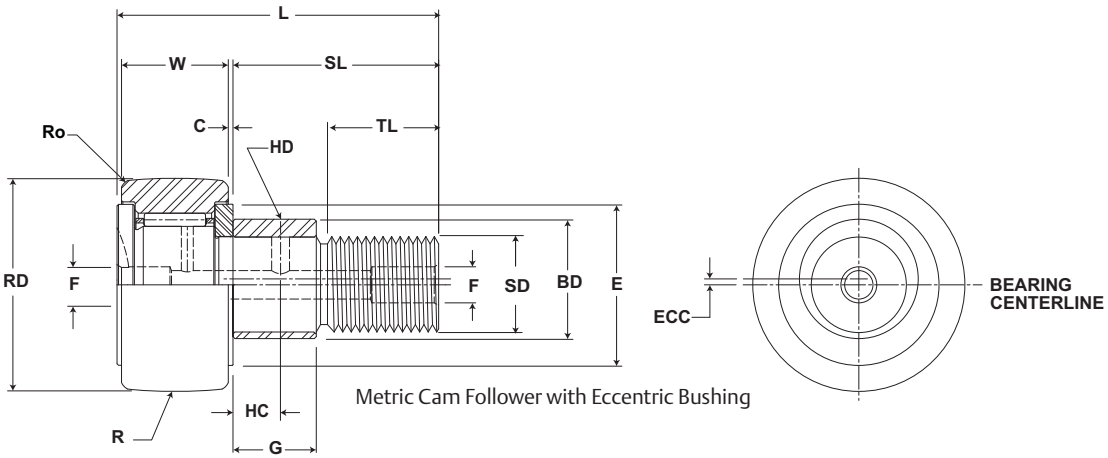

Metric Cam Follower with Eccentric Bushing

MCF, MCFE

Part No. W/O Seals	Part No. With LUBRI-DISC Seals	HC Hole Center mm inch (Ref)	HD Radial Lub. Hole Diameter mm inch (Ref)	F Lub. Hole Dia mm inch (Ref)	H Hex Hole Suffix MCF_xx B mm inch (Ref)	Ro Outer Corner mm inch (Ref)	E Min. Clamping Diameter mm inch (Ref)	Housing Bore Diameter mm inch Nom.	Housing Bore Diameter mm inch Tol.	Thread Type	Clamping Torque Nm in-lb	Limiting Speed (Grease) RPM	WT Bearing Weight kg lb
MCF 22	MCF 22 S	-	-	4 .16	N/A	.5 .02	15 .6	10.000 .3937	+.015/-0 +.0006/- 0	M10x1	15 133	9,000	.04 .09
MCF 22 B	MCF 22 SB			-	4 .16								
MCF 22 X	MCF 22 SX			4 .16	N/A								
MCF 22 BX	MCF 22 SBX			-	4 .16								
MCFE 22	MCFE 22 S	-	-	4 .16	N/A	.5 .02	15 .6	13.050 .5138	+0.025/-0 +0.0009/- 0	M10x1	15 133	9,000	.04 .09
	MCFE 22 SB			-	4 .16								
	MCFE 22 SX			4 .16	N/A								
	MCFE 22 SBX			-	4 .16								
MCFR 22	MCFR 22 S	-	-	4 .16	N/A	.5 .02	15 .6	10.000 .3937	+.015/-0 +.0006/- 0	M10x1	15 133	13,500	.04 .09
MCFR 22 B	MCFR 22 SB			-	4 .16								
MCFR 22 X	MCFR 22 SX			4 .16	N/A								
MCFR 22 BX	MCFR 22 SBX			-	4 .16								
MCFRE 22	MCFRE 22 S	-	-	4 .16	N/A	.5 .02	15 .6	13.050 .5138	+0.025/-0 +0.0009/- 0	M10x1	15 133	13,500	.04 .09
	MCFRE 22 SB			-	4 .16								
	MCFRE 22 SX			4 .16	N/A								
	MCFRE 22 SBX			-	4 .16								
MCF 22A	MCF 22A S	-	-	4 .16	N/A	.5 .02	15 .6	10.000 .3937	+.015/-0 +.0006/- 0	M10x1.25	15 133	9,000	.04 .09
MCF 22A B	MCF 22A SB			-	5 .2								
MCF 22A X	MCF 22A SX			4 .16	N/A								
MCF 22A BX	MCF 22A SBX			-	5 .2								
MCFE 22A	MCFE 22A S	-	-	4 .16	N/A	.5 .02	15 .6	13.050 .5138	+0.025/-0 +0.0009/- 0	M10x1.25	15 133	9,000	.04 .09
	MCFE 22A SB			-	5 .2								
	MCFE 22A SX			4 .16	N/A								
	MCFE 22A SBX			-	5 .2								
MCFR 22A	MCFR 22A S	-	-	4 .16	N/A	.5 .02	15 .6	10.000 .3937	+.015/-0 +.0006/- 0	M10x1.25	15 133	13,500	.04 .09
MCFR 22A B	MCFR 22A SB			-	5 .2								
MCFR 22A X	MCFR 22A SX			4 .2	N/A								
MCFR 22A BX	MCFR 22A SBX			-	5 .2								
MCFRE 22A	MCFRE 22A S	-	-	4 .16	N/A	.5 .02	15 .6	13.050 .5138	+0.025/-0 +0.0009/- 0	M10x1.25	15 133	13,500	.04 .09
	MCFRE 22A SB			-	5 .2								
	MCFRE 22A SX			4 .16	N/A								
	MCFRE 22A SBX			-	5 .2								

McGILL® Metric CAMROL Bearings

Basic Construction Type: Stud Type Crowned / Cylindrical Outside Diameter

Rolling Elements: Full Complement / Retained (Caged) Needle Roller

Bearing Material: Bearing Quality Steel

Seal Type: LUBRI-DISC®

Lubrication: Lithium Soap Grease NLGI #2

System Configuration: Concentric / Eccentric

Mounting Feature: Slot / Hex Hole

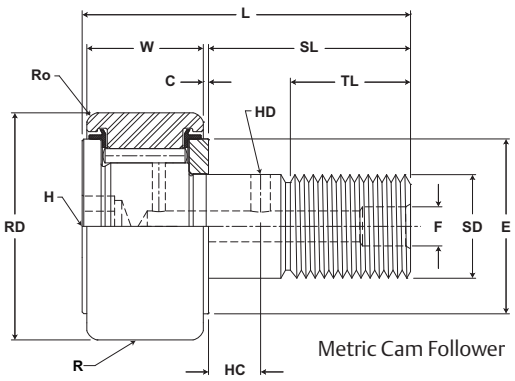

Metric Cam Follower

MCF, MCFE

Part No. W/O Seals	Part No. With LUBRI-DISC Seals	RD Roller Diameter mm inch Nom.	RD Roller Diameter mm inch Tol.	W Roller Width mm inch Nom.	W Roller Width mm inch Tol.	SD Stud Diameter mm inch Nom.	SD Stud Diameter mm inch Tol.	SL Stud Length mm inch (Ref)	C Endplate Extension mm inch (Ref)	TL Minimum Thread Length mm inch (Ref)	L Length Overall mm inch (Ref)	R Cylindrical Suffix MCF-xx-X mm inch Radius	ECC Eccentric Base Modifier MCFE-xx mm inch (Ref)	G Eccentric Base Modifier MCFE-xx mm inch +05/-.15 +.002/-.006	BD Eccentric Base Modifier MCFE-xx mm inch (Ref)	Track Roller Dynamic Rating N/lb	Track Roller Static Rating N/lb
MCF 26 MCF 26 B MCF 26 X MCF 26 BX	MCF 26 S MCF 26 SB MCF 26 SX MCF 26 SBX	26.000 1.0236	+0/-.050 +0/-.002 +0/-.009 +0/-.0004	12.000 .4724	+0/-.12 +0/-.005	10.000 .3937	+0/-.015 +0/-.0006	23 .9	.60 .024	12.0 .47	36 1.4	500 19.7 Cylindrical	N/A	N/A	N/A	7,850 1,765	10,400 2,338
MCFE 26	MCFE 26 S MCFE 26 SB MCFE 26 SX MCFE 26 SBX	26.000 1.0236	+0/-.050 +0/-.002 +0/-.009 +0/-.0004	12.000 .4724	+0/-.12 +0/-.005	10.000 .3937	+0/-.015 +0/-.0006	23 .9	.60 .024	12.0 .47	36 1.4	500 19.7 Cylindrical	0.5 .02	10 0.39	13 .51		
MCFR 26 MCFR 26 B MCFR 26 X MCFR 26 BX	MCFR 26 S MCFR 26 SB MCFR 26 SX MCFR 26 SBX	26.000 1.0236	+0/-.050 +0/-.002 +0/-.009 +0/-.0004	12.000 .4724	+0/-.12 +0/-.005	10.000 .3937	+0/-.015 +0/-.0006	23 .9	.60 .024	12.0 .47	36 1.4	500 19.7 Cylindrical	N/A	N/A	N/A	5,200 1,169	6,050 1,360
MCFRE 26	MCFRE 26 S MCFRE 26 SB MCFRE 26 SX MCFRE 26 SBX	26.000 1.0236	+0/-.050 +0/-.002 +0/-.009 +0/-.0004	12.000 .4724	+0/-.12 +0/-.005	10.000 .3937	+0/-.015 +0/-.0006	23 .9	.60 .024	12.0 .47	36 1.4	500 19.7 Cylindrical	0.5 .02	10 0.39	13 .51		
MCF 26A MCF 26A B MCF 26A X MCF 26A BX	MCF 26A S MCF 26A SB MCF 26A SX MCF 26A SBX	26.000 1.0236	+0/-.050 +0/-.002 +0/-.009 +0/-.0004	12.000 .4724	+0/-.12 +0/-.005	10.000 .3937	+0/-.015 +0/-.0006	23 .9	.60 .024	13.0 .51	36 1.4	500 19.7 Cylindrical	N/A	N/A	N/A	7,850 1,765	10,400 2,338
MCFE 26A	MCFE 26A S MCFE 26A SB MCFE 26A SX MCFE 26A SBX	26.000 1.0236	+0/-.050 +0/-.002 +0/-.009 +0/-.0004	12.000 .4724	+0/-.12 +0/-.005	10.000 .3937	+0/-.015 +0/-.0006	23 .9	.60 .024	13.0 .51	36 1.4	500 19.7 Cylindrical	0.5 .02	10 0.39	13 .51		
MCFR 26A MCFR 26A B MCFR 26A X MCFR 26A BX	MCFR 26A S MCFR 26A SB MCFR 26A SX MCFR 26A SBX	26.000 1.0236	+0/-.050 +0/-.002 +0/-.009 +0/-.0004	12.000 .4724	+0/-.12 +0/-.005	10.000 .3937	+0/-.015 +0/-.0006	23 .9	.60 .024	13.0 .51	36 1.4	500 19.7 Cylindrical	N/A	N/A	N/A	5,200 1,169	6,050 1,360
MCFRE 26A	MCFRE 26A S MCFRE 26A SB MCFRE 26A SX MCFRE 26A SBX	26.000 1.0236	+0/-.050 +0/-.002 +0/-.009 +0/-.0004	12.000 .4724	+0/-.12 +0/-.005	10.000 .3937	+0/-.015 +0/-.0006	23 .9	.60 .024	13.0 .51	36 1.4	500 19.7 Cylindrical	0.5 .02	10 0.39	13 .51		

1. Standard bearing has a crowned roller outside diameter. For straight cylindrical outside roller diameter, add suffix "X". Example - MCFR-35-X or MCF-35-SX.
2. Clamping torque is based on dry threads. If threads are lubricated, use half of value shown.
3. Static load rating is based on stud strength or on internal rolling element load distribution stresses.
4. Dynamic load should not exceed 50% of Dynamic Rating as a track roller.
5. Since load, lubrication method, temperature and other factors affect the maximum operating speed, it is impossible to determine precise limiting speed. The listed limiting speeds are based on lightly loaded bearings having adequate lubrication and are listed only as a design guide. More frequent relubrication is required when operating at higher speeds. Actual bearing testing in the specific application should be conducted if the anticipated operating speed approaches the listed limiting speed.

Inch dimensions for reference only.
Not all parts are available from stock. Please contact customer service for availability (800) 626-2120.
For more information on bearing capabilities outside of our standard offering, please contact Application Engineering (800) 626-2093.

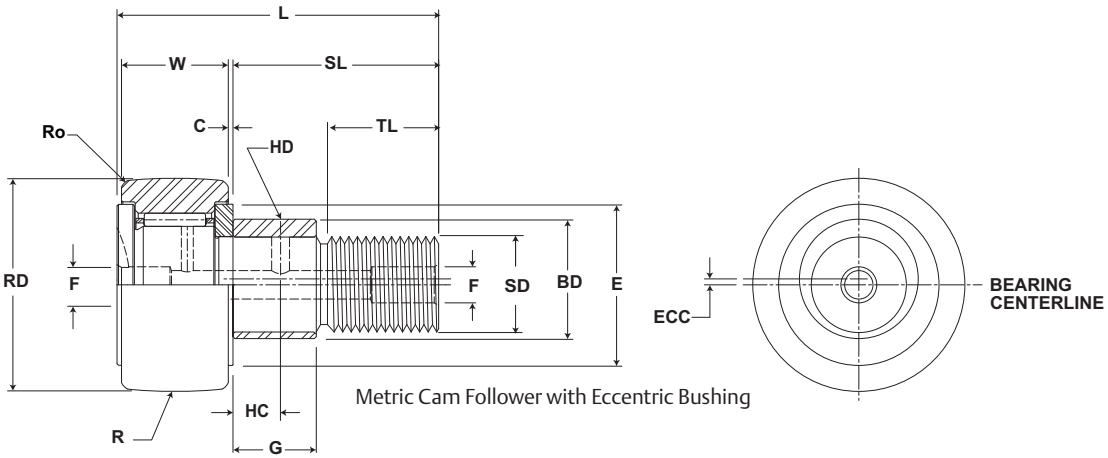

Metric Cam Follower with Eccentric Bushing

MCF, MCFE

Part No. W/O Seals	Part No. With LUBRI-DISC Seals	HC Hole Center mm inch (Ref)	HD Radial Lub. Hole Diameter mm inch (Ref)	F Lub. Hole Dia mm inch (Ref)	H Hex Hole Suffix MCF_xx B mm inch (Ref)	Ro Outer Corner mm inch (Ref)	E Min. Clamping Diameter mm inch (Ref)	Housing Bore Diameter mm inch Nom.	Housing Bore Diameter mm inch Tol.	Thread Type	Clamping Torque Nm in-lb	Limiting Speed (Grease) RPM	WT Bearing Weight kg lb
MCF 26	MCF 26 S	-	-	4 .16	N/A	.5 .02	15 .6	10.000 .3937	+.015/-0 +.0006/- 0	M10x1	15 133	9,000	.05 .11
MCF 26 B	MCF 26 SB			-	4 .16								
MCF 26 X	MCF 26 SX			4 .16	N/A								
MCF 26 BX	MCF 26 SBX			-	4 .16								
MCFE 26	MCFE 26 S	-	-	4 .16	N/A	.5 .02	15 .6	13.050 .5138	+0.025/-0 +0.0009/- 0	M10x1	15 133	9,000	.05 .11
	MCFE 26 SB			-	4 .16								
	MCFE 26 SX			4 .16	N/A								
	MCFE 26 SBX			-	4 .16								
MCFR 26	MCFR 26 S	-	-	4 .16	N/A	.5 .02	15 .6	10.000 .3937	+.015/-0 +.0006/- 0	M10x1	15 133	13,500	.05 .11
MCFR 26 B	MCFR 26 SB			-	4 .16								
MCFR 26 X	MCFR 26 SX			4 .16	N/A								
MCFR 26 BX	MCFR 26 SBX			-	4 .16								
MCFRE 26	MCFRE 26 S	-	-	4 .16	N/A	.5 .02	15 .6	13.050 .5138	+0.025/-0 +0.0009/- 0	M10x1	15 133	13,500	.05 .11
	MCFRE 26 SB			-	4 .16								
	MCFRE 26 SX			4 .16	N/A								
	MCFRE 26 SBX			-	4 .16								
MCF 26A	MCF 26A S	-	-	4 .16	N/A	.5 .02	19 .7	10.000 .3937	+.015/-0 +.0006/- 0	M10x1.25	22 195	9,000	.05 .11
MCF 26A B	MCF 26A SB			-	5 .2								
MCF 26A X	MCF 26A SX			4 .16	N/A								
MCF 26A BX	MCF 26A SBX			-	5 .2								
MCFE 26A	MCFE 26A S	-	-	4 .16	N/A	.5 .02	19 .7	13.050 .5138	+0.025/-0 +0.0009/- 0	M10x1.25	22 195	9,000	.05 .11
	MCFE 26A SB			-	5 .2								
	MCFE 26A SX			4 .16	N/A								
	MCFE 26A SBX			-	5 .2								
MCFR 26A	MCFR 26A S	-	-	4 .16	N/A	.5 .02	19 .7	10.000 .3937	+.015/-0 +.0006/- 0	M10x1.25	22 195	13,500	.05 .11
MCFR 26A B	MCFR 26A SB			-	5 .2								
MCFR 26A X	MCFR 26A SX			4 .16	N/A								
MCFR 26A BX	MCFR 26A SBX			-	5 .2								
MCFRE 26A	MCFRE 26A S	-	-	4 .16	N/A	.5 .02	19 .7	13.050 .5138	+0.025/-0 +0.0009/- 0	M10x1.25	22 195	13,500	.05 .11
	MCFRE 26A SB			-	5 .2								
	MCFRE 26A SX			4 .16	N/A								
	MCFRE 26A SBX			-	5 .2								

McGILL® Metric CAMROL Bearings

Basic Construction Type: Stud Type Crowned / Cylindrical Outside Diameter

Rolling Elements: Full Complement / Retained (Caged) Needle Roller

Bearing Material: Bearing Quality Steel

Seal Type: LUBRI-DISC®

Lubrication: Lithium Soap Grease NLGI #2

System Configuration: Concentric / Eccentric

Mounting Feature: Slot / Hex Hole

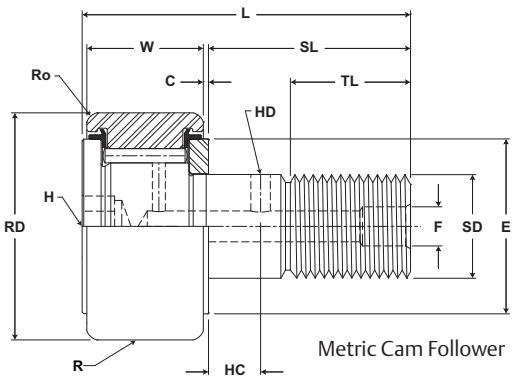

Metric Cam Follower

MCF, MCFE

Part No. W/O Seals	Part No. With LUBRI-DISC Seals	RD Roller Diameter mm inch Nom.	RD Roller Diameter mm inch Tol.	W Roller Width mm inch Nom.	W Roller Width mm inch Tol.	SD Stud Diameter mm inch Nom.	SD Stud Diameter mm inch Tol.	SL Stud Length mm inch (Ref)	C Endplate Extension mm inch (Ref)	TL Minimum Thread Length mm inch (Ref)	L Length Overall mm inch (Ref)	R Cylindrical Suffix MCF-xx-X mm inch Radius	ECC Eccentric Base Modifier MCFE-xx mm inch (Ref)	G Eccentric Base Modifier MCFE-xx mm inch +05/-.15 +.002/-.006	BD Eccentric Base Modifier MCFE-xx mm inch (Ref)	Track Roller Dynamic Rating N/lb	Track Roller Static Rating N/lb
MCF 30	MCF 30 S	30.000 1.1811	+0/-.050 +0/-.002	14.000 .5512	+0/-.12 +0/-.005	12.000 .4724	+0/-.018 +0/-.0007	25 .9	.60 .024	14.0 .55	40 1.6	500 19.7	N/A	N/A	N/A	11,080 2,491	15,300 3,440
MCF 30 B	MCF 30 SB																
MCF 30 X	MCF 30 SX		+0/-.009 +0/-.0004									Cylindrical					
MCF 30 BX	MCF 30 SBX																
MCFE 30	MCFE 30 S	30.000 1.1811	+0/-.050 +0/-.002	14.000 .5512	+0/-.12 +0/-.005	12.000 .4724	+0/-.018 +0/-.0007	25 .9	.60 .024	14.0 .55	40 1.6	500 19.7	0.5 .02	11 0.43	15 .59		
	MCFE 30 SB																
	MCFE 30 SX		+0/-.009 +0/-.0004									Cylindrical					
	MCFE 30 SBX																
MCFR 30	MCFR 30 S	30.000 1.1811	+0/-.050 +0/-.002	14.000 .5512	+0/-.12 +0/-.005	12.000 .4724	+0/-.018 +0/-.0007	25 .9	.60 .024	14.0 .55	40 1.6	500 19.7	N/A	N/A	N/A	6,860 1,542	8,050 1,810
MCFR 30 B	MCFR 30 SB																
MCFR 30 X	MCFR 30 SX		+0/-.009 +0/-.0004									Cylindrical					
MCFR 30 BX	MCFR 30 SBX																
MCFRE 30	MCFRE 30 S	30.000 1.1811	+0/-.050 +0/-.002	14.000 .5512	+0/-.12 +0/-.005	12.000 .4724	+0/-.018 +0/-.0007	25 .9	.60 .024	14.0 .55	40 1.6	500 19.7	0.5 .02	11 0.43	15 .59		
	MCFRE 30 SB																
	MCFRE 30 SX		+0/-.009 +0/-.0004									Cylindrical					
	MCFRE 30 SBX																
MCF 32	MCF 32 S	32.000 1.2598	+0/-.050 +0/-.002	14.000 .5512	+0/-.12 +0/-.005	12.000 .4724	+0/-.018 +0/-.0007	25 .9	.60 .024	14.0 .55	40 1.6	500 19.7	N/A	N/A	N/A	11,080 2,491	15,300 3,440
MCF 32 B	MCF 32 SB																
MCF 32 X	MCF 32 SX		+0/-.011 +0/-.0004									Cylindrical					
MCF 32 BX	MCF 32 SBX																
MCFE 32	MCFE 32 S	32.000 1.2598	+0/-.050 +0/-.002	14.000 .5512	+0/-.12 +0/-.005	12.000 .4724	+0/-.018 +0/-.0007	25 .9	.60 .024	14.0 .55	40 1.6	500 19.7	0.5 .02	11 0.43	15 .59		
	MCFE 32 SB																
	MCFE 32 SX		+0/-.011 +0/-.0004									Cylindrical					
	MCFE 32 SBX																
MCFR 32	MCFR 32 S	32.000 1.2598	+0/-.050 +0/-.002	14.000 .5512	+0/-.12 +0/-.005	12.000 .4724	+0/-.018 +0/-.0007	25 .9	.60 .024	14.0 .55	40 1.6	500 19.7	N/A	N/A	N/A	6,860 1,542	8,050 1,810
MCFR 32 B	MCFR 32 SB																
MCFR 32 X	MCFR 32 SX		+0/-.011 +0/-.0004									Cylindrical					
MCFR 32 BX	MCFR 32 SBX																
MCFRE 32	MCFRE 32 S	32.000 1.2598	+0/-.050 +0/-.002	14.000 .5512	+0/-.12 +0/-.005	12.000 .4724	+0/-.018 +0/-.0007	25 .9	.60 .024	14.0 .55	40 1.6	500 19.7	0.5 .02	11 0.43	15 .59		
	MCFRE 32 SB																
	MCFRE 32 SX		+0/-.011 +0/-.0004									Cylindrical					
	MCFRE 32 SBX																

1. Standard bearing has a crowned roller outside diameter. For straight cylindrical outside roller diameter, add suffix "X". Example - MCFR-35-X or MCF-35-SX.
2. Clamping torque is based on dry threads. If threads are lubricated, use half of value shown.
3. Static load rating is based on stud strength or on internal rolling element load distribution stresses.
4. Dynamic load should not exceed 50% of Dynamic Rating as a track roller.
5. Since load, lubrication method, temperature and other factors affect the maximum operating speed, it is impossible to determine precise limiting speed. The listed limiting speeds are based on lightly loaded bearings having adequate lubrication and are listed only as a design guide. More frequent relubrication is required when operating at higher speeds. Actual bearing testing in the specific application should be conducted if the anticipated operating speed approaches the listed limiting speed.

Inch dimensions for reference only.
Not all parts are available from stock. Please contact customer service for availability (800) 626-2120.
For more information on bearing capabilities outside of our standard offering, please contact Application Engineering (800) 626-2093.

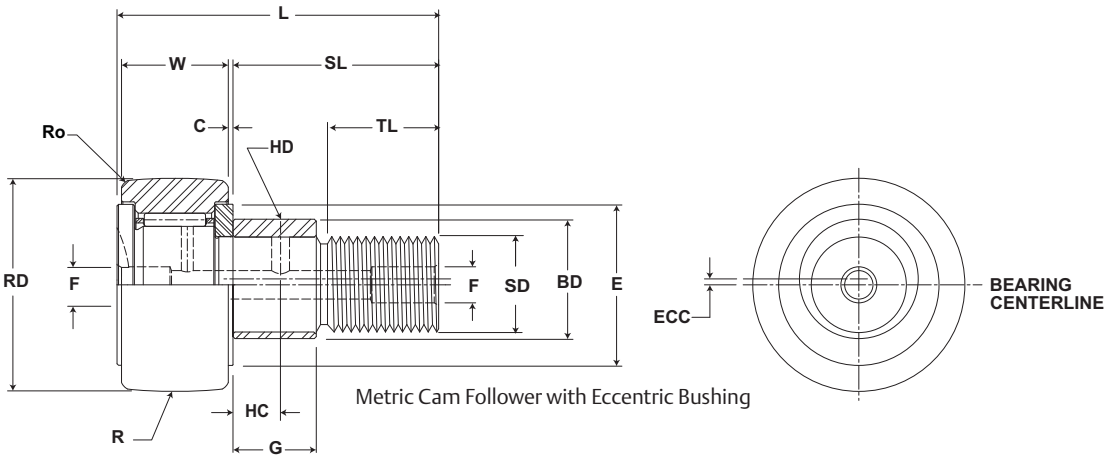

Metric Cam Follower with Eccentric Bushing

MCF, MCFE

Part No.		HC	HD	F	H	Ro	E	Housing Bore Diameter		Thread Type	Clamping Torque	Limiting Speed (Grease)	WT
W/O Seals	With LUBRI-DISC Seals	Hole Center	Radial Lub. Hole Diameter	Lub. Hole Dia	Hex Hole Suffix MCF_xx B	Outer Corner	Min. Clamping Diameter						Bearing Weight
		mm inch		mm inch		mm inch		mm inch			Nm in-lb	RPM	kg lb
		(Ref)	(Ref)	(Ref)	(Ref)	(Ref)	(Ref)	Nom.	Tol.				
MCF 30	MCF 30 S	6 .236	3 .118	6 .24	N/A	1.0 .04	19 .7	12.000 .4724	+.018/-0 +.0007/- 0	M12x1.5	22 195	6,400	.09 .20
MCF 30 B	MCF 30 SB			-	6 .24								
MCF 30 X	MCF 30 SX			6 .24	N/A								
MCF 30 BX	MCF 30 SBX			-	6 .24								
MCFE 30	MCFE 30 S	N/A	N/A	6 .24	N/A	1.0 .04	19 .7	15.050 .5925	+0.025/-0 +0.0009/- 0	M12x1.5	22 195	6,400	.09 .20
	MCFE 30 SB			-	6 .24								
	MCFE 30 SX			6 .24	N/A								
	MCFE 30 SBX			-	6 .24								
MCFR 30	MCFR 30 S	6 .236	3 .118	6 .24	N/A	1.0 .04	19 .7	12.000 .4724	+.018/-0 +.0007/- 0	M12x1.5	22 195	9,600	.09 .20
MCFR 30 B	MCFR 30 SB			-	6 .24								
MCFR 30 X	MCFR 30 SX			6 .24	N/A								
MCFR 30 BX	MCFR 30 SBX			-	6 .24								
MCFRE 30	MCFRE 30 S	N/A	N/A	6 .24	N/A	1.0 .04	19 .7	15.050 .5925	+0.025/-0 +0.0009/- 0	M12x1.5	22 195	9,600	.09 .20
	MCFRE 30 SB			-	6 .24								
	MCFRE 30 SX			6 .24	N/A								
	MCFRE 30 SBX			-	6 .24								
MCF 32	MCF 32 S	6 .236	3 .118	6 .24	N/A	1.0 .04	21 .8	12.000 .4724	+.018/-0 +.0007/- 0	M12x1.5	57 504	6,400	.10 .22
MCF 32 B	MCF 32 SB			-	6 .24								
MCF 32 X	MCF 32 SX			6 .24	N/A								
MCF 32 BX	MCF 32 SBX			-	6 .24								
MCFE 32	MCFE 32 S	N/A	N/A	6 .24	N/A	1.0 .04	21 .8	15.050 .5925	+0.025/-0 +0.0009/- 0	M12x1.5	57 504	6,400	.10 .22
	MCFE 32 SB			-	6 .24								
	MCFE 32 SX			6 .24	N/A								
	MCFE 32 SBX			-	6 .24								
MCFR 32	MCFR 32 S	6 .236	3 .118	6 .24	N/A	1.0 .04	21 .8	12.000 .4724	+.018/-0 +.0007/- 0	M12x1.5	57 504	9,600	.10 .22
MCFR 32 B	MCFR 32 SB			-	6 .24								
MCFR 32 X	MCFR 32 SX			6 .24	N/A								
MCFR 32 BX	MCFR 32 SBX			-	6 .24								
MCFRE 32	MCFRE 32 S	N/A	N/A	6 .24	N/A	1.0 .04	21 .8	15.050 .5925	+0.025/-0 +0.0009/- 0	M12x1.5	57 504	9,600	.10 .22
	MCFRE 32 SB			-	6 .24								
	MCFRE 32 SX			6 .24	N/A								
	MCFRE 32 SBX			-	6 .24								

McGILL® Metric CAMROL Bearings

Basic Construction Type: Stud Type Crowned / Cylindrical Outside Diameter

Rolling Elements: Full Complement / Retained (Caged) Needle Roller

Bearing Material: Bearing Quality Steel

Seal Type: LUBRI-DISC®

Lubrication: Lithium Soap Grease NLGI #2

System Configuration: Concentric / Eccentric

Mounting Feature: Slot / Hex Hole

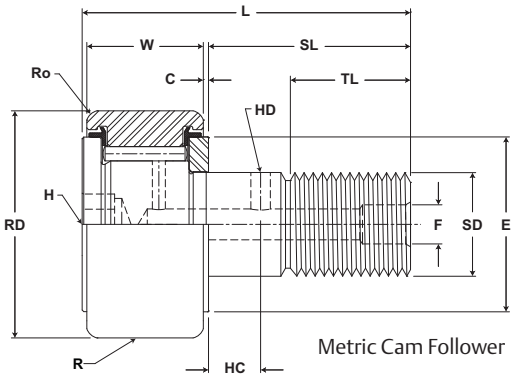

Metric Cam Follower

MCF, MCFE

Part No. W/O Seals	Part No. With LUBRI-DISC Seals	RD Roller Diameter mm inch Nom.	RD Roller Diameter mm inch Tol.	W Roller Width mm inch Nom.	W Roller Width mm inch Tol.	SD Stud Diameter mm inch Nom.	SD Stud Diameter mm inch Tol.	SL Stud Length mm inch (Ref)	C Endplate Extension mm inch (Ref)	TL Minimum Thread Length mm inch (Ref)	L Length Overall mm inch (Ref)	R Cylindrical Suffix MCF-xx-X mm inch Radius	ECC Eccentric Base Modifier MCFE-xx mm inch (Ref)	G Eccentric Base Modifier MCFE-xx mm inch +05/-.15 +.002/-.006	BD Eccentric Base Modifier MCFE-xx mm inch (Ref)	Track Roller Dynamic Rating N/lb	Track Roller Static Rating N/lb
MCF 35 MCF 35 B MCF 35 X MCF 35 BX	MCF 35 S MCF 35 SB MCF 35 SX MCF 35 SBX	35.000 1.3780	+0/-.050 +0/-.002 +0/-.011 +0/-.0004	18.000 .7087	+0/-.12 +0/-.005	16.000 .6299	+0/-.018 +0/-.0007	33 1.3	.80 .031	18.0 .71	52 2.0	500 19.7 Cylindrical	N/A	N/A	N/A	16,970 3,815	28,500 6,407
MCFE 35	MCFE 35 S MCFE 35 SB MCFE 35 SX MCFE 35 SBX	35.000 1.3780	+0/-.050 +0/-.002 +0/-.011 +0/-.0004	18.000 .7087	+0/-.12 +0/-.005	16.000 .6299	+0/-.018 +0/-.0007	33 1.3	.80 .031	18.0 .71	52 2.0	500 19.7 Cylindrical	0.5 .02	14 0.55	20 .79	16,970 3,815	28,500 6,407
MCFR 35 MCFR 35 B MCFR 35 X MCFR 35 BX	MCFR 35 S MCFR 35 SB MCFR 35 SX MCFR 35 SBX	35.000 1.3780	+0/-.050 +0/-.002 +0/-.011 +0/-.0004	18.000 .7087	+0/-.12 +0/-.005	16.000 .6299	+0/-.018 +0/-.0007	33 1.3	.80 .031	18.0 .71	52 2.0	500 19.7 Cylindrical	N/A	N/A	N/A	10,890 2,448	15,900 3,575
MCFRE 35	MCFRE 35 S MCFRE 35 SB MCFRE 35 SX MCFRE 35 SBX	35.000 1.3780	+0/-.050 +0/-.002 +0/-.011 +0/-.0004	18.000 .7087	+0/-.12 +0/-.005	16.000 .6299	+0/-.018 +0/-.0007	33 1.3	.80 .031	18.0 .71	52 2.0	500 19.7 Cylindrical	0.5 .02	14 0.55	20 .79		
MCF 40 MCF 40 B MCF 40 X MCF 40 BX	MCF 40 S MCF 40 SB MCF 40 SX MCF 40 SBX	40.000 1.5748	+0/-.050 +0/-.002 +0/-.011 +0/-.0004	20.000 .7874	+0/-.12 +0/-.005	18.000 .7087	+0/-.018 +0/-.0007	37 1.4	.80 .031	19.0 .75	58 2.3	500 19.7 Cylindrical	N/A	N/A	N/A	19,420 4,366	32,200 7,239
MCFE 40	MCFE 40 S MCFE 40 SB MCFE 40 SX MCFE 40 SBX	40.000 1.5748	+0/-.050 +0/-.002 +0/-.011 +0/-.0004	20.000 .7874	+0/-.12 +0/-.005	18.000 .7087	+0/-.018 +0/-.0007	37 1.4	.80 .031	19.0 .75	58 2.3	500 19.7 Cylindrical	1 .04	16 0.63	22 .87		
MCFR 40 MCFR 40 B MCFR 40 X MCFR 40 BX	MCFR 40 S MCFR 40 SB MCFR 40 SX MCFR 40 SBX	40.000 1.5748	+0/-.050 +0/-.002 +0/-.011 +0/-.0004	20.000 .7874	+0/-.12 +0/-.005	18.000 .7087	+0/-.018 +0/-.0007	37 1.4	.80 .031	19.0 .75	58 2.3	500 19.7 Cylindrical	N/A	N/A	N/A	13,340 2,999	19,800 4,451
MCFRE 40	MCFRE 40 S MCFRE 40 SB MCFRE 40 SX MCFRE 40 SBX	40.000 1.5748	+0/-.050 +0/-.002 +0/-.011 +0/-.0004	20.000 .7874	+0/-.12 +0/-.005	18.000 .7087	+0/-.018 +0/-.0007	37 1.4	.80 .031	19.0 .75	58 2.3	500 19.7 Cylindrical	1 .04	16 0.63	22 .87		

1. Standard bearing has a crowned roller outside diameter. For straight cylindrical outside roller diameter, add suffix "X". Example - MCFR-35-X or MCF-35-SX.
2. Clamping torque is based on dry threads. If threads are lubricated, use half of value shown.
3. Static load rating is based on stud strength or on internal rolling element load distribution stresses.
4. Dynamic load should not exceed 50% of Dynamic Rating as a track roller.
5. Since load, lubrication method, temperature and other factors affect the maximum operating speed, it is impossible to determine precise limiting speed. The listed limiting speeds are based on lightly loaded bearings having adequate lubrication and are listed only as a design guide. More frequent relubrication is required when operating at higher speeds. Actual bearing testing in the specific application should be conducted if the anticipated operating speed approaches the listed limiting speed.

Inch dimensions for reference only.
Not all parts are available from stock. Please contact customer service for availability (800) 626-2120.
For more information on bearing capabilities outside of our standard offering, please contact Application Engineering (800) 626-2093.

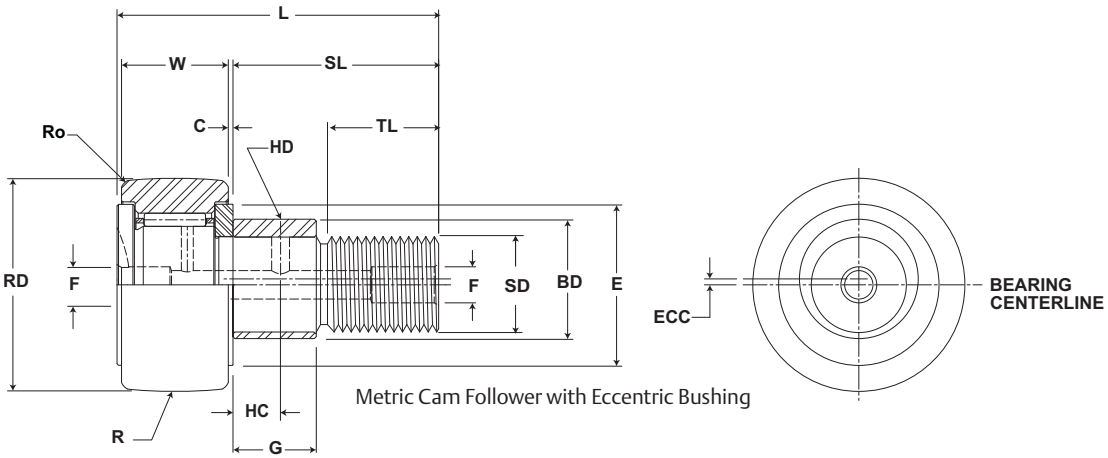

Metric Cam Follower with Eccentric Bushing

MCF, MCFE

Part No. W/O Seals	Part No. With LUBRI-DISC Seals	HC Hole Center mm inch (Ref)	HD Radial Lub. Hole Diameter mm inch (Ref)	F Lub. Hole Dia mm inch (Ref)	H Hex Hole Suffix MCF_xx B mm inch (Ref)	Ro Outer Corner mm inch (Ref)	E Min. Clamping Diameter mm inch (Ref)	Housing Bore Diameter mm inch Nom.	Housing Bore Diameter mm inch Tol.	Thread Type	Clamping Torque Nm in-lb	Limiting Speed (Grease) RPM	WT Bearing Weight kg lb
MCF 35	MCF 35 S	8 .315	3 .118	6 .24	N/A	1.0 .04	24 .9	16.000 .6299	+.018/-0 +.0007/- 0	M16x1.5	85 752	4,200	.16 .35
MCF 35 B	MCF 35 SB			-	8 .31								
MCF 35 X	MCF 35 SX			6 .24	N/A								
MCF 35 BX	MCF 35 SBX			-	8 .31								
MCFE 35	MCFE 35 S	N/A	N/A	6 .24	N/A	1.0 .04	24 .9	20.050 .7894	+0.025/-0 +0.0009/- 0	M16x1.5	85 752	4,200	.16 .35
	MCFE 35 SB			-	8 .31								
	MCFE 35 SX			6 .24	N/A								
	MCFE 35 SBX			-	8 .31								
MCFR 35	MCFR 35 S	8 .315	3 .118	6 .24	N/A	1.0 .04	24 .9	16.000 .6299	+.018/-0 +.0007/- 0	M16x1.5	85 752	6,300	.16 .35
MCFR 35 B	MCFR 35 SB			-	8 .31								
MCFR 35 X	MCFR 35 SX			6 .24	N/A								
MCFR 35 BX	MCFR 35 SBX			-	8 .31								
MCFRE 35	MCFRE 35 S	N/A	N/A	6 .24	N/A	1.0 .04	24 .9	20.050 .7894	+0.025/-0 +0.0009/- 0	M16x1.5	85 752	6,300	.16 .35
	MCFRE 35 SB			-	8 .31								
	MCFRE 35 SX			6 .24	N/A								
	MCFRE 35 SBX			-	8 .31								
MCF 40	MCF 40 S	8 .315	3 .118	6 .24	N/A	1.5 .06	27 1.1	18.000 .7087	+.018/-0 +.0007/- 0	M18x1.5	85 752	3,300	.25 .55
MCF 40 B	MCF 40 SB			-	8 .31								
MCF 40 X	MCF 40 SX			6 .24	N/A								
MCF 40 BX	MCF 40 SBX			-	8 .31								
MCFE 40	MCFE 40 S	N/A	N/A	6 .24	N/A	1.5 .06	27 1.1	22.050 .8681	+0.025/-0 +0.0009/- 0	M18x1.5	85 752	3,300	.25 .55
	MCFE 40 SB			-	8 .31								
	MCFE 40 SX			6 .24	N/A								
	MCFE 40 SBX			-	8 .31								
MCFR 40	MCFR 40 S	8 .315	3 .118	6 .24	N/A	1.5 .06	27 1.1	18.000 .7087	+.018/-0 +.0007/- 0	M18x1.5	85 752	5,000	.25 .55
MCFR 40 B	MCFR 40 SB			-	8 .31								
MCFR 40 X	MCFR 40 SX			6 .24	N/A								
MCFR 40 BX	MCFR 40 SBX			-	8 .31								
MCFRE 40	MCFRE 40 S	N/A	N/A	6 .24	N/A	1.5 .06	27 1.1	22.050 .8681	+0.025/-0 +0.0009/- 0	M18x1.5	85 752	5,000	.25 .55
	MCFRE 40 SB			-	8 .31								
	MCFRE 40 SX			6 .24	N/A								
	MCFRE 40 SBX			-	8 .31								

McGILL® Metric CAMROL Bearings

Basic Construction Type: Stud Type Crowned / Cylindrical Outside Diameter

Rolling Elements: Full Complement / Retained (Caged) Needle Roller

Bearing Material: Bearing Quality Steel

Seal Type: LUBRI-DISC®

Lubrication: Lithium Soap Grease NLGI #2

System Configuration: Concentric / Eccentric

Mounting Feature: Slot / Hex Hole

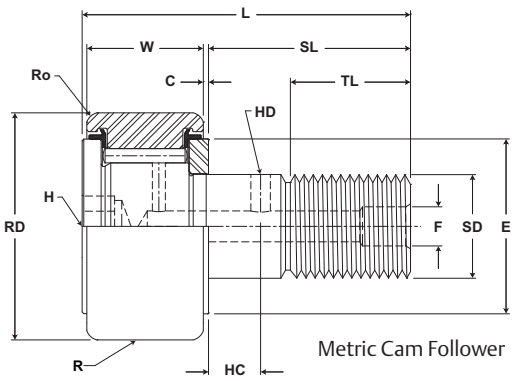

Metric Cam Follower

MCF, MCFE

Part No. W/O Seals	Part No. With LUBRI-DISC Seals	RD Roller Diameter mm inch Nom.	RD Roller Diameter mm inch Tol.	W Roller Width mm inch Nom.	W Roller Width mm inch Tol.	SD Stud Diameter mm inch Nom.	SD Stud Diameter mm inch Tol.	SL Stud Length mm inch (Ref)	C Endplate Extension mm inch (Ref)	TL Minimum Thread Length mm inch (Ref)	L Length Overall mm inch (Ref)	R Cylindrical Suffix MCF-xx-X mm inch Radius	ECC Eccentric Base Modifier MCFE-xx mm inch (Ref)	G Eccentric Base Modifier MCFE-xx mm inch +05/-.15 +.002/-.006	BD Eccentric Base Modifier MCFE-xx mm inch (Ref)	Track Roller Dynamic Rating N/lb	Track Roller Static Rating N/lb
MCF 40A MCF 40A B MCF 40A X MCF 40A BX	MCF 40A S MCF 40A SB MCF 40A SX MCF 40A SBX	40.000 1.5748	+0/-.050 +0/-.002 +0/-.011 +0/-.0004	20.000 .7874	+0/-.12 +0/-.005	18.000 .7087	+0/-.018 +0/-.0007	37 1.4	.80 .031	20.0 .79	58 2.3	500 19.7 Cylindrical	N/A	N/A	N/A	19,420 4,366	32,200 7,239
MCFE 40A	MCFE 40A S MCFE 40A SB MCFE 40A SX MCFE 40A SBX	40.000 1.5748	+0/-.050 +0/-.002 +0/-.011 +0/-.0004	20.000 .7874	+0/-.12 +0/-.005	18.000 .7087	+0/-.018 +0/-.0007	37 1.4	.80 .031	20.0 .79	58 2.3	500 19.7 Cylindrical	1 .04	16 0.63	22 .87		
MCFR 40A MCFR 40A B MCFR 40A X MCFR 40A BX	MCFR 40A S MCFR 40A SB MCFR 40A SX MCFR 40A SBX	40.000 1.5748	+0/-.050 +0/-.002 +0/-.011 +0/-.0004	20.000 .7874	+0/-.12 +0/-.005	18.000 .7087	+0/-.018 +0/-.0007	37 1.4	.80 .031	20.0 .79	58 2.3	500 19.7 Cylindrical	N/A	N/A	N/A	13,340 2,999	19,800 4,451
MCFRE 40A	MCFRE 40A S MCFRE 40A SB MCFRE 40A SX MCFRE 40A SBX	40.000 1.5748	+0/-.050 +0/-.002 +0/-.011 +0/-.0004	20.000 .7874	+0/-.12 +0/-.005	18.000 .7087	+0/-.018 +0/-.0007	37 1.4	.80 .031	20.0 .79	58 2.3	500 19.7 Cylindrical	1 .04	16 0.63	22 .87		
MCF 47 MCF 47 B MCF 47 X MCF 47 BX	MCF 47 S MCF 47 SB MCF 47 SX MCF 47 SBX	47.000 1.8504	+0/-.050 +0/-.002 +0/-.011 +0/-.0004	24.000 .9449	+0/-.12 +0/-.005	20.000 .7874	+0/-.021 +0/-.0008	41 1.6	.80 .031	21.0 .83	66 2.6	500 19.7 Cylindrical	N/A	N/A	N/A	25,690 5,776	46,700 10,499
MCFE 47	MCFE 47 S MCFE 47 SB MCFE 47 SX MCFE 47 SBX	47.000 1.8504	+0/-.050 +0/-.002 +0/-.011 +0/-.0004	24.000 .9449	+0/-.12 +0/-.005	20.000 .7874	+0/-.021 +0/-.0008	41 1.6	.80 .031	21.0 .83	66 2.6	500 19.7 Cylindrical	1 .04	18 0.71	24 .94		
MCFR 47 MCFR 47 B MCFR 47 X MCFR 47 BX	MCFR 47 S MCFR 47 SB MCFR 47 SX MCFR 47 SBX	47.000 1.8504	+0/-.050 +0/-.002 +0/-.011 +0/-.0004	24.000 .9449	+0/-.12 +0/-.005	20.000 .7874	+0/-.021 +0/-.0008	41 1.6	.80 .031	21.0 .83	66 2.6	500 19.7 Cylindrical	N/A	N/A	N/A	17,750 3,991	29,800 6,700
MCFRE 47	MCFRE 47 S MCFRE 47 SB MCFRE 47 SX MCFRE 47 SBX	47.000 1.8504	+0/-.050 +0/-.002 +0/-.011 +0/-.0004	24.000 .9449	+0/-.12 +0/-.005	20.000 .7874	+0/-.021 +0/-.0008	41 1.6	.80 .031	21.0 .83	66 2.6	500 19.7 Cylindrical	1 .04	18 0.71	24 .94		

1. Standard bearing has a crowned roller outside diameter. For straight cylindrical outside roller diameter, add suffix "X". Example - MCFR-35-X or MCF-35-SX.
2. Clamping torque is based on dry threads. If threads are lubricated, use half of value shown.
3. Static load rating is based on stud strength or on internal rolling element load distribution stresses.
4. Dynamic load should not exceed 50% of Dynamic Rating as a track roller.
5. Since load, lubrication method, temperature and other factors affect the maximum operating speed, it is impossible to determine precise limiting speed. The listed limiting speeds are based on lightly loaded bearings having adequate lubrication and are listed only as a design guide. More frequent relubrication is required when operating at higher speeds. Actual bearing testing in the specific application should be conducted if the anticipated operating speed approaches the listed limiting speed.

Inch dimensions for reference only.
Not all parts are available from stock. Please contact customer service for availability (800) 626-2120.
For more information on bearing capabilities outside of our standard offering, please contact Application Engineering (800) 626-2093.

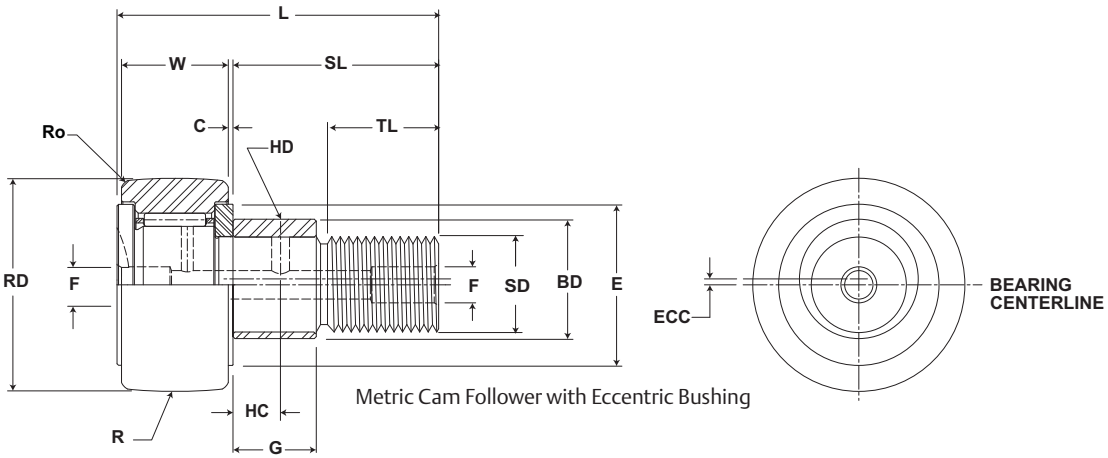

Metric Cam Follower with Eccentric Bushing

MCF, MCFE

Part No. W/O Seals	Part No. With LUBRI-DISC Seals	HC Hole Center mm inch (Ref)	HD Radial Lub. Hole Diameter mm inch (Ref)	F Lub. Hole Dia mm inch (Ref)	H Hex Hole Suffix MCF_xx B mm inch (Ref)	Ro Outer Corner mm inch (Ref)	E Min. Clamping Diameter mm inch (Ref)	Housing Bore Diameter mm inch Nom.	Housing Bore Diameter mm inch Tol.	Thread Type	Clamping Torque Nm in-lb	Limiting Speed (Grease) RPM	WT Bearing Weight kg lb
MCF 40A	MCF 40A S	10 .394	3 .118	6 .24	N/A	1.5 .06	27 1.1	18.000 .7087	+.018/-0 +.0007/- 0	M18x1.5	118 1,044	3,300	.25 .55
MCF 40A B	MCF 40A SB			-	8 .31								
MCF 40A X	MCF 40A SX			6 .24	N/A								
MCF 40A BX	MCF 40A SBX			-	8 .31								
MCFE 40A	MCFE 40A S	N/A	N/A	6 .24	N/A	1.5 .06	27 1.1	22.050 .8681	+0.025/-0 +0.0009/- 0	M18x1.5	118 1,044	3,300	.25 .55
	MCFE 40A SB			-	8 .31								
	MCFE 40A SX			6 .24	N/A								
	MCFE 40A SBX			-	8 .31								
MCFR 40A	MCFR 40A S	10 .394	3 .118	6 .24	N/A	1.5 .06	27 1.1	18.000 .7087	+.018/-0 +.0007/- 0	M18x1.5	118 1,044	5,000	.25 .55
MCFR 40A B	MCFR 40A SB			-	8 .31								
MCFR 40A X	MCFR 40A SX			6 .24	N/A								
MCFR 40A BX	MCFR 40A SBX			-	8 .31								
MCFRE 40A	MCFRE 40A S	N/A	N/A	6 .24	N/A	1.5 .06	27 1.1	22.050 .8681	+0.025/-0 +0.0009/- 0	M18x1.5	118 1,044	5,000	.25 .55
	MCFRE 40A SB			-	8 .31								
	MCFRE 40A SX			6 .24	N/A								
	MCFRE 40A SBX			-	8 .31								
MCF 47	MCF 47 S	9 .354	4 .157	8 .31	N/A	1.5 .06	30 1.2	20.000 .7874	+.021/-0 +.0008/- 0	M20x1.5	118 1,044	2,600	.39 .86
MCF 47 B	MCF 47 SB			-	10 .39								
MCF 47 X	MCF 47 SX			8 .31	N/A								
MCF 47 BX	MCF 47 SBX			-	10 .39								
MCFE 47	MCFE 47 S	N/A	N/A	8 .31	N/A	1.5 .06	30 1.2	24.050 .9469	+0.025/-0 +0.0009/- 0	M20x1.5	118 1,044	2,600	.39 .86
	MCFE 47 SB			-	10 .39								
	MCFE 47 SX			8 .31	N/A								
	MCFE 47 SBX			-	10 .39								
MCFR 47	MCFR 47 S	9 .354	4 .157	8 .31	N/A	1.5 .06	30 1.2	20.000 .7874	+.021/-0 +.0008/- 0	M20x1.5	118 1,044	3,900	.39 .86
MCFR 47 B	MCFR 47 SB			-	10 .39								
MCFR 47 X	MCFR 47 SX			8 .31	N/A								
MCFR 47 BX	MCFR 47 SBX			-	10 .39								
MCFRE 47	MCFRE 47 S	N/A	N/A	8 .31	N/A	1.5 .06	30 1.2	24.050 .9469	+0.025/-0 +0.0009/- 0	M20x1.5	118 1,044	3,900	.39 .86
	MCFRE 47 SB			-	10 .39								
	MCFRE 47 SX			8 .31	N/A								
	MCFRE 47 SBX			-	10 .39								

McGILL® Metric CAMROL Bearings

Basic Construction Type: Stud Type Crowned / Cylindrical Outside Diameter

Rolling Elements: Full Complement / Retained (Caged) Needle Roller

Bearing Material: Bearing Quality Steel

Seal Type: LUBRI-DISC®

Lubrication: Lithium Soap Grease NLGI #2

System Configuration: Concentric / Eccentric

Mounting Feature: Slot / Hex Hole

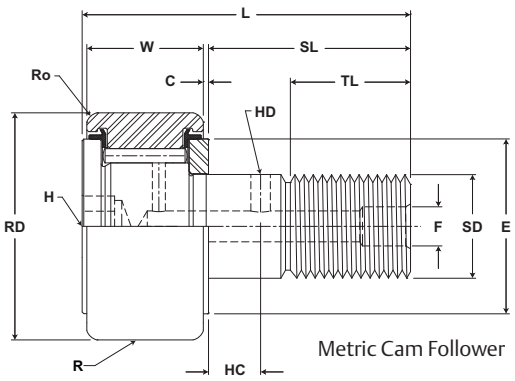

Metric Cam Follower

MCF, MCFE

Part No. W/O Seals	Part No. With LUBRI-DISC Seals	RD Roller Diameter mm inch Nom.	RD Roller Diameter mm inch Tol.	W Roller Width mm inch Nom.	W Roller Width mm inch Tol.	SD Stud Diameter mm inch Nom.	SD Stud Diameter mm inch Tol.	SL Stud Length mm inch (Ref)	C Endplate Extension mm inch (Ref)	TL Minimum Thread Length mm inch (Ref)	L Length Overall mm inch (Ref)	R Cylindrical Suffix MCF-xx-X mm inch Radius	ECC Eccentric Base Modifier MCFE-xx mm inch (Ref)	G Eccentric Base Modifier MCFE-xx mm inch +05/-.15 +.002/-.006	BD Eccentric Base Modifier MCFE-xx mm inch (Ref)	Track Roller Dynamic Rating N/lb	Track Roller Static Rating N/lb
MCF 47A MCF 47A B MCF 47A X MCF 47A BX	MCF 47A S MCF 47A SB MCF 47A SX MCF 47A SBX	47.000 1.8504	+0/-.050 +0/-.002 +0/-.011 +0/-.0004	24.000 .9449	+0/-.12 +0/-.005	20.000 .7874	+0/-.021 +0/-.0008	41 1.6	.80 .031	22.0 .87	66 2.6	500 19.7 Cylindrical	N/A	N/A	N/A	25,690 5,776	46,700 10,499
MCFE 47A	MCFE 47A S MCFE 47A SB MCFE 47A SX MCFE 47A SBX	47.000 1.8504	+0/-.050 +0/-.002 +0/-.011 +0/-.0004	24.000 .9449	+0/-.12 +0/-.005	20.000 .7874	+0/-.021 +0/-.0008	41 1.6	.80 .031	22.0 .87	66 2.6	500 19.7 Cylindrical	1 .04	18 0.71	24 .94		
MCFR 47A MCFR 47A B MCFR 47A X MCFR 47A BX	MCFR 47A S MCFR 47A SB MCFR 47A SX MCFR 47A SBX	47.000 1.8504	+0/-.050 +0/-.002 +0/-.011 +0/-.0004	24.000 .9449	+0/-.12 +0/-.005	20.000 .7874	+0/-.021 +0/-.0008	41 1.6	.80 .031	22.0 .87	66 2.6	500 19.7 Cylindrical	N/A	N/A	N/A	17,750 3,991	29,800 6,700
MCFRE 47A	MCFRE 47A S MCFRE 47A SB MCFRE 47A SX MCFRE 47A SBX	47.000 1.8504	+0/-.050 +0/-.002 +0/-.011 +0/-.0004	24.000 .9449	+0/-.12 +0/-.005	20.000 .7874	+0/-.021 +0/-.0008	41 1.6	.80 .031	22.0 .87	66 2.6	500 19.7 Cylindrical	1 .04	18 0.71	24 .94		
MCF 52 MCF 52 B MCF 52 X MCF 52 BX	MCF 52 S MCF 52 SB MCF 52 SX MCF 52 SBX	52.000 2.0472	+0/-.050 +0/-.002 +0/-.013 +0/-.0005	24.000 .9449	+0/-.12 +0/-.005	20.000 .7874	+0/-.021 +0/-.0008	41 1.6	.80 .031	21.0 .83	66 2.6	500 19.7 Cylindrical	N/A	N/A	N/A	25,690 5,776	46,700 10,499
MCFE 52	MCFE 52 S MCFE 52 SB MCFE 52 SX MCFE 52 SBX	52.000 2.0472	+0/-.050 +0/-.002 +0/-.013 +0/-.0005	24.000 .9449	+0/-.12 +0/-.005	20.000 .7874	+0/-.021 +0/-.0008	41 1.6	.80 .031	21.0 .83	66 2.6	500 19.7 Cylindrical	1 .04	18 0.71	24 .94		
MCFR 52 MCFR 52 B MCFR 52 X MCFR 52 BX	MCFR 52 S MCFR 52 SB MCFR 52 SX MCFR 52 SBX	52.000 2.0472	+0/-.050 +0/-.002 +0/-.013 +0/-.0005	24.000 .9449	+0/-.12 +0/-.005	20.000 .7874	+0/-.021 +0/-.0008	41 1.6	.80 .031	21.0 .83	66 2.6	500 19.7 Cylindrical	N/A	N/A	N/A	17,750 3,991	29,800 6,700
MCFRE 52	MCFRE 52 S MCFRE 52 SB MCFRE 52 SX MCFRE 52 SBX	52.000 2.0472	+0/-.050 +0/-.002 +0/-.013 +0/-.0005	24.000 .9449	+0/-.12 +0/-.005	20.000 .7874	+0/-.021 +0/-.0008	41 1.6	.80 .031	21.0 .83	66 2.6	500 19.7 Cylindrical	1 .04	18 0.71	24 .94		

1. Standard bearing has a crowned roller outside diameter. For straight cylindrical outside roller diameter, add suffix "X". Example - MCFR-35-X or MCF-35-SX.
2. Clamping torque is based on dry threads. If threads are lubricated, use half of value shown.
3. Static load rating is based on stud strength or on internal rolling element load distribution stresses.
4. Dynamic load should not exceed 50% of Dynamic Rating as a track roller.
5. Since load, lubrication method, temperature and other factors affect the maximum operating speed, it is impossible to determine precise limiting speed. The listed limiting speeds are based on lightly loaded bearings having adequate lubrication and are listed only as a design guide. More frequent relubrication is required when operating at higher speeds. Actual bearing testing in the specific application should be conducted if the anticipated operating speed approaches the listed limiting speed.

Inch dimensions for reference only.
Not all parts are available from stock. Please contact customer service for availability (800) 626-2120.
For more information on bearing capabilities outside of our standard offering, please contact Application Engineering (800) 626-2093.

Metric CAMROL Bearings

McGILL®

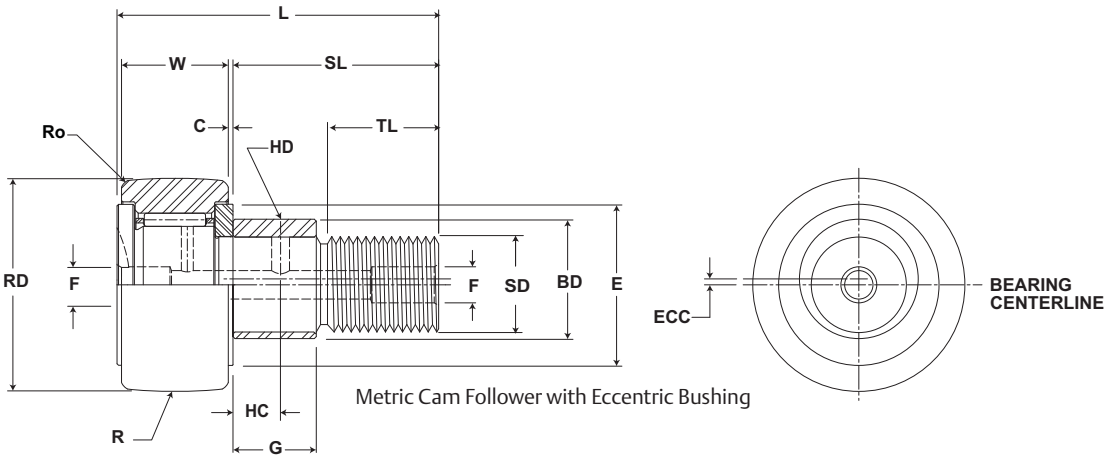

Metric Cam Follower with Eccentric Bushing

MCF, MCFE

Part No. W/O Seals	Part No. With LUBRI-DISC Seals	HC Hole Center mm inch (Ref)	HD Radial Lub. Hole Diameter mm inch (Ref)	F Lub. Hole Dia mm inch (Ref)	H Hex Hole Suffix MCF_xx B mm inch (Ref)	Ro Outer Corner mm inch (Ref)	E Min. Clamping Diameter mm inch (Ref)	Housing Bore Diameter mm inch Nom.	Housing Bore Diameter mm inch Tol.	Thread Type	Clamping Torque Nm in-lb	Limiting Speed (Grease) RPM	WT Bearing Weight kg lb
MCF 47A	MCF 47A S	12 .472	4 .157	8 .31	N/A	1.5 .06	30 1.2	20.000 .7874	+.021/-0 +.0008/- 0	M20x1.5	118 1,044	2,600	.39 .86
MCF 47A B	MCF 47A SB			-	10 .39								
MCF 47A X	MCF 47A SX			8 .31	N/A								
MCF 47A BX	MCF 47A SBX			-	10 .39								
MCFE 47A	MCFE 47A S	N/A	N/A	8 .31	N/A	1.5 .06	30 1.2	24.050 .9469	+0.025/-0 +0.0009/- 0	M20x1.5	118 1,044	2,600	.39 .86
	MCFE 47A SB			-	10 .39								
	MCFE 47A SX			8 .31	N/A								
	MCFE 47A SBX			-	10 .39								
MCFR 47A	MCFR 47A S	12 .472	4 .157	8 .31	N/A	1.5 .06	30 1.2	20.000 .7874	+.021/-0 +.0008/- 0	M20x1.5	118 1,044	3,900	.39 .86
MCFR 47A B	MCFR 47A SB			-	10 .39								
MCFR 47A X	MCFR 47A SX			8 .31	N/A								
MCFR 47A BX	MCFR 47A SBX			-	10 .39								
MCFRE 47A	MCFRE 47A S	N/A	N/A	8 .31	N/A	1.5 .06	30 1.2	24.050 .9469	+0.025/-0 +0.0009/- 0	M20x1.5	118 1,044	3,900	.39 .86
	MCFRE 47A SB			-	10 .39								
	MCFRE 47A SX			8 .31	N/A								
	MCFRE 47A SBX			-	10 .39								
MCF 52	MCF 52 S	9 .354	4 .157	8 .31	N/A	1.5 .06	36 1.4	20.000 .7874	+.021/-0 +.0008/- 0	M20x1.5	118 1,044	2,600	.45 .99
MCF 52 B	MCF 52 SB			-	10 .39								
MCF 52 X	MCF 52 SX			8 .31	N/A								
MCF 52 BX	MCF 52 SBX			-	10 .39								
MCFE 52	MCFE 52 S	N/A	N/A	8 .31	N/A	1.5 .06	36 1.4	24.050 .9469	+0.025/-0 +0.0009/- 0	M20x1.5	118 1,044	2,600	.45 .99
	MCFE 52 SB			-	10 .39								
	MCFE 52 SX			8 .31	N/A								
	MCFE 52 SBX			-	10 .39								
MCFR 52	MCFR 52 S	9 .354	4 .157	8 .31	N/A	1.5 .06	36 1.4	20.000 .7874	+.021/-0 +.0008/- 0	M20x1.5	118 1,044	3,900	.45 .99
MCFR 52 B	MCFR 52 SB			-	10 .39								
MCFR 52 X	MCFR 52 SX			8 .31	N/A								
MCFR 52 BX	MCFR 52 SBX			-	10 .39								
MCFRE 52	MCFRE 52 S	N/A	N/A	8 .31	N/A	1.5 .06	36 1.4	24.050 .9469	+0.025/-0 +0.0009/- 0	M20x1.5	118 1,044	3,900	.45 .99
	MCFRE 52 SB			-	10 .39								
	MCFRE 52 SX			8 .31	N/A								
	MCFRE 52 SBX			-	10 .39								

McGILL® Metric CAMROL Bearings

Basic Construction Type: Stud Type Crowned / Cylindrical Outside Diameter

Rolling Elements: Full Complement / Retained (Caged) Needle Roller

Bearing Material: Bearing Quality Steel

Seal Type: LUBRI-DISC®

Lubrication: Lithium Soap Grease NLGI #2

System Configuration: Concentric / Eccentric

Mounting Feature: Slot / Hex Hole

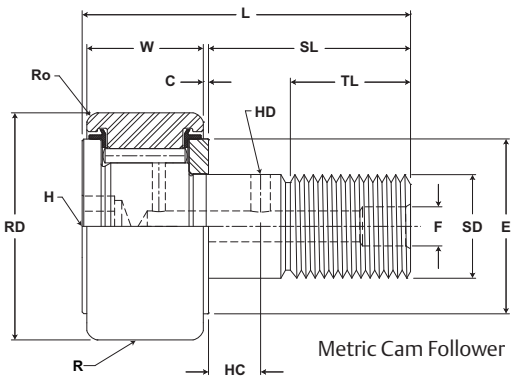

Metric Cam Follower

MCF, MCFE

Part No. W/O Seals	Part No. With LUBRI-DISC Seals	RD Roller Diameter mm inch Nom.	RD Roller Diameter mm inch Tol.	W Roller Width mm inch Nom.	W Roller Width mm inch Tol.	SD Stud Diameter mm inch Nom.	SD Stud Diameter mm inch Tol.	SL Stud Length mm inch (Ref)	C Endplate Extension mm inch (Ref)	TL Minimum Thread Length mm inch (Ref)	L Length Overall mm inch (Ref)	R Cylindrical Suffix MCF-xx-X mm inch Radius	ECC Eccentric Base Modifier MCFE-xx mm inch (Ref)	G Eccentric Base Modifier MCFE-xx mm inch +05/-.15 +.002/-.006	BD Eccentric Base Modifier MCFE-xx mm inch (Ref)	Track Roller Dynamic Rating N/lb	Track Roller Static Rating N/lb
MCF 52A MCF 52A B MCF 52A X MCF 52A BX	MCF 52A S MCF 52A SB MCF 52A SX MCF 52A SBX	52.000 2.0472	+0/-.050 +0/-.002 +0/-.013 +0/-.0005	24.000 .9449	+0/-.12 +0/-.005	20.000 .7874	+0/-.021 +0/-.0008	41 1.6	.80 .031	22.0 .87	66 2.6	500 19.7 Cylindrical	N/A	N/A	N/A	25,690 5,776	46,700 10,499
MCFE 52A	MCFE 52A S MCFE 52A SB MCFE 52A SX MCFE 52A SBX	52.000 2.0472	+0/-.050 +0/-.002 +0/-.013 +0/-.0005	24.000 .9449	+0/-.12 +0/-.005	20.000 .7874	+0/-.021 +0/-.0008	41 1.6	.80 .031	22.0 .87	66 2.6	500 19.7 Cylindrical	1 .04	18 0.71	24 .94		
MCFR 52A MCFR 52A B MCFR 52A X MCFR 52A BX	MCFR 52A S MCFR 52A SB MCFR 52A SX MCFR 52A SBX	52.000 2.0472	+0/-.050 +0/-.002 +0/-.013 +0/-.0005	24.000 .9449	+0/-.12 +0/-.005	20.000 .7874	+0/-.021 +0/-.0008	41 1.6	.80 .031	22.0 .87	66 2.6	500 19.7 Cylindrical	N/A	N/A	N/A	17,750 3,991	29,800 6,700
MCFRE 52A	MCFRE 52A S MCFRE 52A SB MCFRE 52A SX MCFRE 52A SBX	52.000 2.0472	+0/-.050 +0/-.002 +0/-.013 +0/-.0005	24.000 .9449	+0/-.12 +0/-.005	20.000 .7874	+0/-.021 +0/-.0008	41 1.6	.80 .031	22.0 .87	66 2.6	500 19.7 Cylindrical	1 .04	18 0.71	24 .94		
MCF 62 MCF 62 B MCF 62 X MCF 62 BX	MCF 62 S MCF 62 SB MCF 62 SX MCF 62 SBX	62.000 2.4409	+0/-.050 +0/-.002 +0/-.013 +0/-.0005	29.000 1.1417	+0/-.12 +0/-.005	24.000 .9449	+0/-.021 +0/-.0008	50 1.9	.80 .031	25.0 .98	80 3.1	500 19.7 Cylindrical	N/A	N/A	N/A	38,840 8,732	65,400 14,703
MCFE 62	MCFE 62 S MCFE 62 SB MCFE 62 SX MCFE 62 SBX	62.000 2.4409	+0/-.050 +0/-.002 +0/-.013 +0/-.0005	29.000 1.1417	+0/-.12 +0/-.005	24.000 .9449	+0/-.021 +0/-.0008	50 1.9	.80 .031	25.0 .98	80 3.1	500 19.7 Cylindrical	1 .04	22 0.87	28 .10		
MCFR 62 MCFR 62 B MCFR 62 X MCFR 62 BX	MCFR 62 S MCFR 62 SB MCFR 62 SX MCFR 62 SBX	62.000 2.4409	+0/-.050 +0/-.002 +0/-.013 +0/-.0005	29.000 1.1417	+0/-.12 +0/-.005	24.000 .9449	+0/-.021 +0/-.0008	50 1.9	.80 .031	25.0 .98	80 3.1	500 19.7 Cylindrical	N/A	N/A	N/A	26,380 5,931	46,300 10,409
MCFRE 62	MCFRE 62 S MCFRE 62 SB MCFRE 62 SX MCFRE 62 SBX	62.000 2.4409	+0/-.050 +0/-.002 +0/-.013 +0/-.0005	29.000 1.1417	+0/-.12 +0/-.005	24.000 .9449	+0/-.021 +0/-.0008	50 1.9	.80 .031	25.0 .98	80 3.1	500 19.7 Cylindrical	1 .04	22 0.87	28 .10		

1. Standard bearing has a crowned roller outside diameter. For straight cylindrical outside roller diameter, add suffix "X". Example - MCFR-35-X or MCF-35-SX.
2. Clamping torque is based on dry threads. If threads are lubricated, use half of value shown.
3. Static load rating is based on stud strength or on internal rolling element load distribution stresses.
4. Dynamic load should not exceed 50% of Dynamic Rating as a track roller.
5. Since load, lubrication method, temperature and other factors affect the maximum operating speed, it is impossible to determine precise limiting speed. The listed limiting speeds are based on lightly loaded bearings having adequate lubrication and are listed only as a design guide. More frequent relubrication is required when operating at higher speeds. Actual bearing testing in the specific application should be conducted if the anticipated operating speed approaches the listed limiting speed.

Inch dimensions for reference only.
Not all parts are available from stock. Please contact customer service for availability (800) 626-2120.
For more information on bearing capabilities outside of our standard offering, please contact Application Engineering (800) 626-2093.

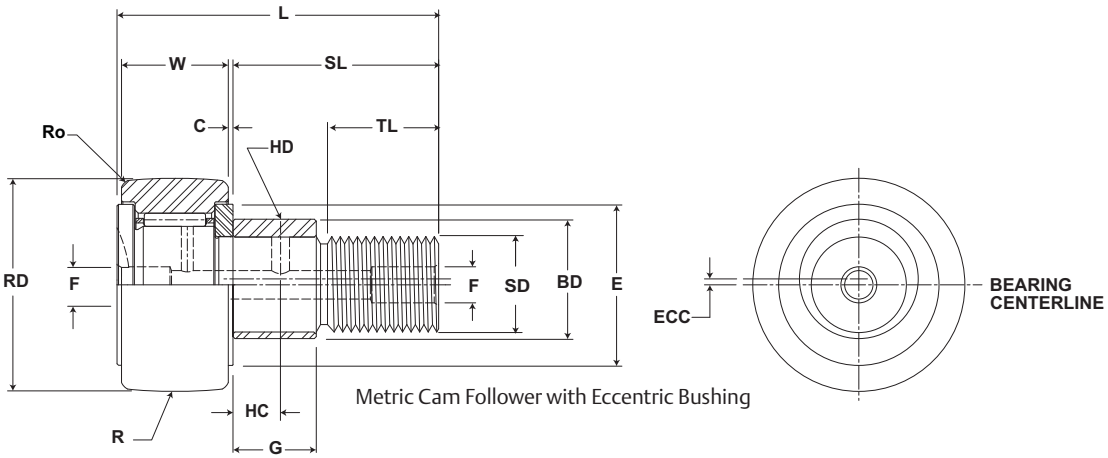

Metric Cam Follower with Eccentric Bushing

MCF, MCFE

Part No. W/O Seals	Part No. With LUBRI-DISC Seals	HC Hole Center mm inch (Ref)	HD Radial Lub. Hole Diameter mm inch (Ref)	F Lub. Hole Dia mm inch (Ref)	H Hex Hole Suffix MCF_xx B mm inch (Ref)	Ro Outer Corner mm inch (Ref)	E Min. Clamping Diameter mm inch (Ref)	Housing Bore Diameter mm inch Nom.	Housing Bore Diameter mm inch Tol.	Thread Type	Clamping Torque Nm in-lb	Limiting Speed (Grease) RPM	WT Bearing Weight kg lb
MCF 52A	MCF 52A S	12 .472	4 .157	8 .31	N/A	1.5 .06	36 1.4	20.000 .7874	+.021/-0 +.0008/- 0	M20x1.5	216 1,912	2,600	.45 .99
MCF 52A B	MCF 52A SB			-	10 .39								
MCF 52A X	MCF 52A SX			8 .31	N/A								
MCF 52A BX	MCF 52A SBX			-	10 .39								
MCFE 52A	MCFE 52A S	N/A	N/A	8 .31	N/A	1.5 .06	36 1.4	24.050 .9469	+0.025/-0 +0.0009/- 0	M20x1.5	216 1,912	2,600	.45 .99
	MCFE 52A SB			-	10 .39								
	MCFE 52A SX			8 .31	N/A								
	MCFE 52A SBX			-	10 .39								
MCFR 52A	MCFR 52A S	12 .472	4 .157	8 .31	N/A	1.5 .06	36 1.4	20.000 .7874	+.021/-0 +.0008/- 0	M20x1.5	216 1,912	3,900	.45 .99
MCFR 52A B	MCFR 52A SB			-	10 .39								
MCFR 52A X	MCFR 52A SX			8 .31	N/A								
MCFR 52A BX	MCFR 52A SBX			-	10 .39								
MCFRE 52A	MCFRE 52A S	N/A	N/A	8 .31	N/A	1.5 .06	36 1.4	24.050 .9469	+0.025/-0 +0.0009/- 0	M20x1.5	216 1,912	3,900	.45 .99
	MCFRE 52A SB			-	10 .39								
	MCFRE 52A SX			8 .31	N/A								
	MCFRE 52A SBX			-	10 .39								
MCF 62	MCF 62 S	11 .433	4 .157	8 .31	N/A	2.0 .08	44 1.7	24.000 .9449	+.021/-0 +.0008/- 0	M24x1.5	216 1,912	2,100	.81 1.79
MCF 62 B	MCF 62 SB			-	14 .55								
MCF 62 X	MCF 62 SX			8 .31	N/A								
MCF 62 BX	MCF 62 SBX			-	14 .55								
MCFE 62	MCFE 62 S	N/A	N/A	8 .31	N/A	2.0 .08	63 2.5	28.050 .1043	+0.025/-0 +0.0009/- 0	M24x1.5	216 1,912	2,100	.81 1.79
	MCFE 62 SB			-	14 .55								
	MCFE 62 SX			8 .31	N/A								
	MCFE 62 SBX			-	14 .55								
MCFR 62	MCFR 62 S	11 .433	4 .157	8 .31	N/A	2.0 .08	63 2.5	24.000 .9449	+.021/-0 +.0008/- 0	M24x1.5	216 1,912	3,100	.81 1.79
MCFR 62 B	MCFR 62 SB			-	14 .55								
MCFR 62 X	MCFR 62 SX			8 .31	N/A								
MCFR 62 BX	MCFR 62 SBX			-	14 .55								
MCFRE 62	MCFRE 62 S	N/A	N/A	8 .31	N/A	2.0 .08	63 2.5	28.050 .1043	+0.025/-0 +0.0009/- 0	M24x1.5	216 1,912	3,100	.81 1.79
	MCFRE 62 SB			-	14 .55								
	MCFRE 62 SX			8 .31	N/A								
	MCFRE 62 SBX			-	14 .55								

McGILL® Metric CAMROL Bearings

Basic Construction Type: Stud Type Crowned / Cylindrical Outside Diameter

Rolling Elements: Full Complement / Retained (Caged) Needle Roller

Bearing Material: Bearing Quality Steel

Seal Type: LUBRI-DISC®

Lubrication: Lithium Soap Grease NLGI #2

System Configuration: Concentric / Eccentric

Mounting Feature: Slot / Hex Hole

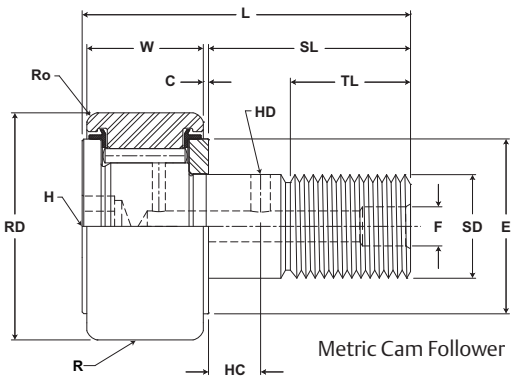

Metric Cam Follower

MCF, MCFE

Part No. W/O Seals	Part No. With LUBRI-DISC Seals	RD Roller Diameter mm inch Nom.	RD Roller Diameter mm inch Tol.	W Roller Width mm inch Nom.	W Roller Width mm inch Tol.	SD Stud Diameter mm inch Nom.	SD Stud Diameter mm inch Tol.	SL Stud Length mm inch (Ref)	C Endplate Extension mm inch (Ref)	TL Minimum Thread Length mm inch (Ref)	L Length Overall mm inch (Ref)	R Cylindrical Suffix MCF-xx-X mm inch Radius	ECC Eccentric Base Modifier MCFE-xx mm inch (Ref)	G Eccentric Base Modifier MCFE-xx mm inch +05/-.15 +.002/-.006	BD Eccentric Base Modifier MCFE-xx mm inch (Ref)	Track Roller Dynamic Rating N/lb	Track Roller Static Rating N/lb
MCF 62A MCF 62A B MCF 62A X MCF 62A BX	MCF 62A S MCF 62A SB MCF 62A SX MCF 62A SBX	62.000 2.4409	+0/-.050 +0/-.002 +0/-.013 +0/-.0005	29.000 1.1417	+0/-.12 +0/-.005	24.000 .9449	+0/-.021 +0/-.0008	50 1.9	.80 .031	25.0 .98	80 3.1	500 19.7 Cylindrical	N/A	N/A	N/A	38,840 8,732	65,400 14,703
MCFE 62A	MCFE 62A S MCFE 62A SB MCFE 62A SX MCFE 62A SBX	62.000 2.4409	+0/-.050 +0/-.002 +0/-.013 +0/-.0005	29.000 1.1417	+0/-.12 +0/-.005	24.000 .9449	+0/-.021 +0/-.0008	50 1.9	.80 .031	25.0 .98	80 3.1	500 19.7 Cylindrical	1 .04	22 0.87	28 .10		
MCFR 62A MCFR 62A B MCFR 62A X MCFR 62A BX	MCFR 62A S MCFR 62A SB MCFR 62A SX MCFR 62A SBX	62.000 2.4409	+0/-.050 +0/-.002 +0/-.013 +0/-.0005	29.000 1.1417	+0/-.12 +0/-.005	24.000 .9449	+0/-.021 +0/-.0008	50 1.9	.80 .031	25.0 .98	80 3.1	500 19.7 Cylindrical	N/A	N/A	N/A	26,380 5,931	46,300 10,409
MCFRE 62A	MCFRE 62A S MCFRE 62A SB MCFRE 62A SX MCFRE 62A SBX	62.000 2.4409	+0/-.050 +0/-.002 +0/-.013 +0/-.0005	29.000 1.1417	+0/-.12 +0/-.005	24.000 .9449	+0/-.021 +0/-.0008	50 1.9	.80 .031	25.0 .98	80 3.1	500 19.7 Cylindrical	1 .04	22 0.87	28 .10		
MCF 72 MCF 72 B MCF 72 X MCF 72 BX	MCF 72 S MCF 72 SB MCF 72 SX MCF 72 SBX	72.000 2.8346	+0/-.050 +0/-.002 +0/-.013 +0/-.0005	29.000 1.1417	+0/-.12 +0/-.005	24.000 .9449	+0/-.021 +0/-.0008	50 1.9	.80 .031	25.0 .98	80 3.1	500 19.7 Cylindrical	N/A	N/A	N/A	38,840 8,732	65,400 14,703
MCFE 72	MCFE 72 S MCFE 72 SB MCFE 72 SX MCFE 72 SBX	72.000 2.8346	+0/-.050 +0/-.002 +0/-.013 +0/-.0005	29.000 1.1417	+0/-.12 +0/-.005	24.000 .9449	+0/-.021 +0/-.0008	50 1.9	.80 .031	25.0 .98	80 3.1	500 19.7 Cylindrical	1 .04	22 0.87	28 .10		
MCFR 72 MCFR 72 B MCFR 72 X MCFR 72 BX	MCFR 72 S MCFR 72 SB MCFR 72 SX MCFR 72 SBX	72.000 2.8346	+0/-.050 +0/-.002 +0/-.013 +0/-.0005	29.000 1.1417	+0/-.12 +0/-.005	24.000 .9449	+0/-.021 +0/-.0008	50 1.9	.80 .031	25.0 .98	80 3.1	500 19.7 Cylindrical	N/A	N/A	N/A	26,380 5,931	46,300 10,409
MCFRE 72	MCFRE 72 S MCFRE 72 SB MCFRE 72 SX MCFRE 72 SBX	72.000 2.8346	+0/-.050 +0/-.002 +0/-.013 +0/-.0005	29.000 1.1417	+0/-.12 +0/-.005	24.000 .9449	+0/-.021 +0/-.0008	50 1.9	.80 .031	25.0 .98	80 3.1	500 19.7 Cylindrical	1 .04	22 0.87	28 .10		

1. Standard bearing has a crowned roller outside diameter. For straight cylindrical outside roller diameter, add suffix "X". Example - MCFR-35-X or MCF-35-SX.
2. Clamping torque is based on dry threads. If threads are lubricated, use half of value shown.
3. Static load rating is based on stud strength or on internal rolling element load distribution stresses.
4. Dynamic load should not exceed 50% of Dynamic Rating as a track roller.
5. Since load, lubrication method, temperature and other factors affect the maximum operating speed, it is impossible to determine precise limiting speed. The listed limiting speeds are based on lightly loaded bearings having adequate lubrication and are listed only as a design guide. More frequent relubrication is required when operating at higher speeds. Actual bearing testing in the specific application should be conducted if the anticipated operating speed approaches the listed limiting speed.

Inch dimensions for reference only.
Not all parts are available from stock. Please contact customer service for availability (800) 626-2120.
For more information on bearing capabilities outside of our standard offering, please contact Application Engineering (800) 626-2093.

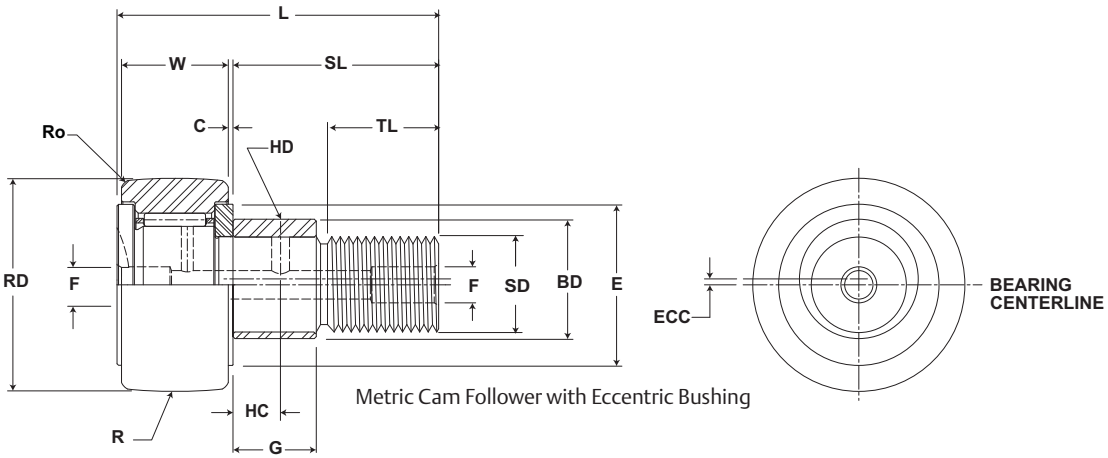

Metric Cam Follower with Eccentric Bushing

MCF, MCFE

Part No. W/O Seals	Part No. With LUBRI-DISC Seals	HC Hole Center mm inch (Ref)	HD Radial Lub. Hole Diameter mm inch (Ref)	F Lub. Hole Dia mm inch (Ref)	H Hex Hole Suffix MCF_xx B mm inch (Ref)	Ro Outer Corner mm inch (Ref)	E Min. Clamping Diameter mm inch (Ref)	Housing Bore Diameter mm inch Nom.	Housing Bore Diameter mm inch Tol.	Thread Type	Clamping Torque Nm in-lb	Limiting Speed (Grease) RPM	WT Bearing Weight kg lb
MCF 62A	MCF 62A S	12 .472	4 .157	8 .31	N/A	2.0 .08	63 2.5	24.000 .9449	+.021/-0 +.0008/- 0	M24x1.5	216 1,912	2,100	.81 1.79
MCF 62A B	MCF 62A SB			-	14 .55								
MCF 62A X	MCF 62A SX			8 .31	N/A								
MCF 62A BX	MCF 62A SBX			-	14 .55								
MCFE 62A	MCFE 62A S	N/A	N/A	8 .31	N/A	2.0 .08	63 2.5	28.050 .1043	+0.025/-0 +0.0009/- 0	M24x1.5	216 1,912	2,100	.81 1.79
	MCFE 62A SB			-	14 .55								
	MCFE 62A SX			8 .31	N/A								
	MCFE 62A SBX			-	14 .55								
MCFR 62A	MCFR 62A S	12 .472	4 .157	8 .31	N/A	2.0 .08	63 2.5	24.000 .9449	+.021/-0 +.0008/- 0	M24x1.5	216 1,912	3,100	.81 1.79
MCFR 62A B	MCFR 62A SB			-	14 .55								
MCFR 62A X	MCFR 62A SX			8 .31	N/A								
MCFR 62A BX	MCFR 62A SBX			-	14 .55								
MCFRE 62A	MCFRE 62A S	N/A	N/A	8 .31	N/A	2.0 .08	63 2.5	28.050 .1043	+0.025/-0 +0.0009/- 0	M24x1.5	216 1,912	3,100	.81 1.79
	MCFRE 62A SB			-	14 .55								
	MCFRE 62A SX			8 .31	N/A								
	MCFRE 62A SBX			-	14 .55								
MCF 72	MCF 72 S	12 .472	4 .157	8 .31	N/A	2.0 .08	63 2.5	24.000 .9449	+.021/-0 +.0008/- 0	M24x1.5	216 1,912	2,100	1.04 2.29
MCF 72 B	MCF 72 SB			-	14 .55								
MCF 72 X	MCF 72 SX			8 .31	N/A								
MCF 72 BX	MCF 72 SBX			-	14 .55								
MCFE 72	MCFE 72 S	N/A	N/A	8 .31	N/A	2.0 .08	63 2.5	28.050 .1043	+0.025/-0 +0.0009/- 0	M24x1.5	216 1,912	2,100	1.04 2.29
	MCFE 72 SB			-	14 .55								
	MCFE 72 SX			8 .31	N/A								
	MCFE 72 SBX			-	14 .55								
MCFR 72	MCFR 72 S	12 .472	4 .157	8 .31	N/A	2.0 .08	63 2.5	24.000 .9449	+.021/-0 +.0008/- 0	M24x1.5	216 1,912	3,100	1.04 2.29
MCFR 72 B	MCFR 72 SB			-	14 .55								
MCFR 72 X	MCFR 72 SX			8 .31	N/A								
MCFR 72 BX	MCFR 72 SBX			-	14 .55								
MCFRE 72	MCFRE 72 S	N/A	N/A	8 .31	N/A	2.0 .08	63 2.5	28.050 .1043	+0.025/-0 +0.0009/- 0	M24x1.5	216 1,912	3,100	1.04 2.29
	MCFRE 72 SB			-	14 .55								
	MCFRE 72 SX			8 .31	N/A								
	MCFRE 72 SBX			-	14 .55								

McGILL® Metric CAMROL Bearings

Basic Construction Type: Stud Type Crowned / Cylindrical Outside Diameter

Rolling Elements: Full Complement / Retained (Caged) Needle Roller

Bearing Material: Bearing Quality Steel

Seal Type: LUBRI-DISC®

Lubrication: Lithium Soap Grease NLGI #2

System Configuration: Concentric / Eccentric

Mounting Feature: Slot / Hex Hole

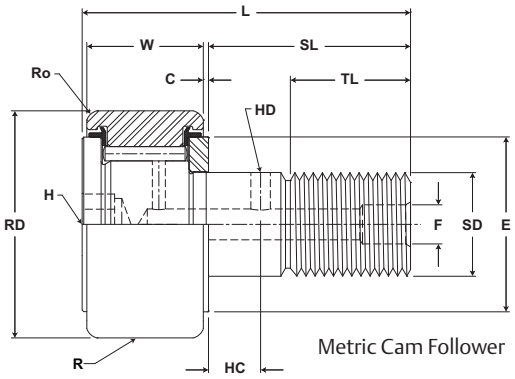

Metric Cam Follower

MCF, MCFE

Part No. W/O Seals	Part No. With LUBRI-DISC Seals	RD Roller Diameter mm inch Nom.	RD Roller Diameter mm inch Tol.	W Roller Width mm inch Nom.	W Roller Width mm inch Tol.	SD Stud Diameter mm inch Nom.	SD Stud Diameter mm inch Tol.	SL Stud Length mm inch (Ref)	C Endplate Extension mm inch (Ref)	TL Minimum Thread Length mm inch (Ref)	L Length Overall mm inch (Ref)	R Cylindrical Suffix MCF-xx-X mm inch Radius	ECC Eccentric Base Modifier MCFE-xx mm inch (Ref)	G Eccentric Base Modifier MCFE-xx mm inch +05/-.15 +.002/-.006	BD Eccentric Base Modifier MCFE-xx mm inch (Ref)	Track Roller Dynamic Rating N/lb	Track Roller Static Rating N/lb
MCF 72A MCF 72A B MCF 72A X MCF 72A BX	MCF 72A S MCF 72A SB MCF 72A SX MCF 72A SBX	72.000 2.8346	+0/-.050 +0/-.002 +0/-.013 +0/-.0005	29.000 1.1417	+0/-.12 +0/-.005	24.000 .9449	+0/-.021 +0/-.0008	50 1.9	.80 .031	25.0 .98	80 3.1	500 19.7 Cylindrical	N/A	N/A	N/A	38,840 8,732	65,400 14,703
MCFE 72A	MCFE 72A S MCFE 72A SB MCFE 72A SX MCFE 72A SBX	72.000 2.8346	+0/-.050 +0/-.002 +0/-.013 +0/-.0005	29.000 1.1417	+0/-.12 +0/-.005	24.000 .9449	+0/-.021 +0/-.0008	50 1.9	.80 .031	25.0 .98	80 3.1	500 19.7 Cylindrical	1 .04	22 0.87	28 .10		
MCFR 72A MCFR 72A B MCFR 72A X MCFR 72A BX	MCFR 72A S MCFR 72A SB MCFR 72A SX MCFR 72A SBX	72.000 2.8346	+0/-.050 +0/-.002 +0/-.013 +0/-.0005	29.000 1.1417	+0/-.12 +0/-.005	24.000 .9449	+0/-.021 +0/-.0008	50 1.9	.80 .031	25.0 .98	80 3.1	500 19.7 Cylindrical	N/A	N/A	N/A	26,380 5,931	46,300 10,409
MCFRE 72A	MCFRE 72A S MCFRE 72A SB MCFRE 72A SX MCFRE 72A SBX	72.000 2.8346	+0/-.050 +0/-.002 +0/-.013 +0/-.0005	29.000 1.1417	+0/-.12 +0/-.005	24.000 .9449	+0/-.021 +0/-.0008	50 1.9	.80 .031	25.0 .98	80 3.1	500 19.7 Cylindrical	1 .04	22 0.87	28 .10		
MCF 80 MCF 80 B MCF 80 X MCF 80 BX	MCF 80 S MCF 80 SB MCF 80 SX MCF 80 SBX	80.000 3.1496	+0/-.050 +0/-.002 +0/-.015 +0/-.0006	35.000 1.3780	+0/-.12 +0/-.005	30.000 1.1811	+0/-.021 +0/-.0008	63 2.5	1.00 .039	32.0 1.26	100 3.9	500 19.7 Cylindrical	N/A	N/A	N/A	64,140 14,420	102,300 22,999
MCFE 80	MCFE 80 S MCFE 80 SB MCFE 80 SX MCFE 80 SBX	80.000 3.1496	+0/-.050 +0/-.002 +0/-.015 +0/-.0006	35.000 1.3780	+0/-.12 +0/-.005	30.000 1.1811	+0/-.021 +0/-.0008	63 2.5	1.00 .039	32.0 1.26	100 3.9	500 19.7 Cylindrical	1.5 .06	29 1.14	35 .38		
MCFR 80A MCFR 80A B MCFR 80A X MCFR 80A BX	MCFR 80A S MCFR 80A SB MCFR 80A SX MCFR 80A SBX	80.000 3.1496	+0/-.050 +0/-.002 +0/-.015 +0/-.0006	35.000 1.3780	+0/-.12 +0/-.005	30.000 1.1811	+0/-.021 +0/-.0008	63 2.5	1.00 .039	32.0 1.26	100 3.9	500 19.7 Cylindrical	N/A	N/A	N/A	46,680 10,495	87,600 19,694
MCFRE 80A	MCFRE 80A S MCFRE 80A SB MCFRE 80A SX MCFRE 80A SBX	80.000 3.1496	+0/-.050 +0/-.002 +0/-.015 +0/-.0006	35.000 1.3780	+0/-.12 +0/-.005	30.000 1.1811	+0/-.021 +0/-.0008	63 2.5	1.00 .039	32.0 1.26	100 3.9	500 19.7 Cylindrical	1.5 .06	29 1.14	35 .38		

1. Standard bearing has a crowned roller outside diameter. For straight cylindrical outside roller diameter, add suffix "X". Example - MCFR-35-X or MCF-35-SX.
2. Clamping torque is based on dry threads. If threads are lubricated, use half of value shown.
3. Static load rating is based on stud strength or on internal rolling element load distribution stresses.
4. Dynamic load should not exceed 50% of Dynamic Rating as a track roller.
5. Since load, lubrication method, temperature and other factors affect the maximum operating speed, it is impossible to determine precise limiting speed. The listed limiting speeds are based on lightly loaded bearings having adequate lubrication and are listed only as a design guide. More frequent relubrication is required when operating at higher speeds. Actual bearing testing in the specific application should be conducted if the anticipated operating speed approaches the listed limiting speed.

Inch dimensions for reference only.
Not all parts are available from stock. Please contact customer service for availability (800) 626-2120.
For more information on bearing capabilities outside of our standard offering, please contact Application Engineering (800) 626-2093.

Metric CAMROL Bearings

McGILL®

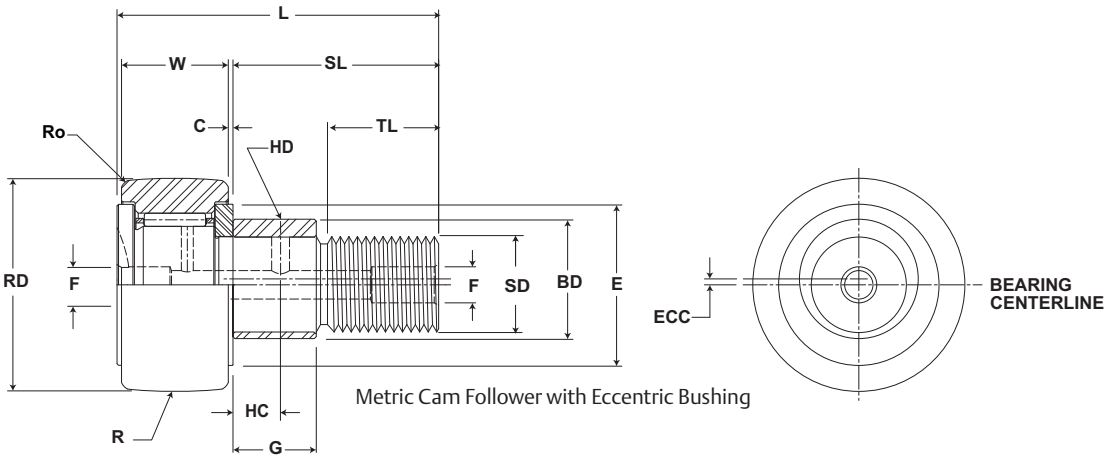

Metric Cam Follower with Eccentric Bushing

MCF, MCFE

Part No. W/O Seals	Part No. With LUBRI-DISC Seals	HC Hole Center mm inch (Ref)	HD Radial Lub. Hole Diameter mm inch (Ref)	F Lub. Hole Dia mm inch (Ref)	H Hex Hole Suffix MCF_xx B mm inch (Ref)	Ro Outer Corner mm inch (Ref)	E Min. Clamping Diameter mm inch (Ref)	Housing Bore Diameter mm inch Nom.	Housing Bore Diameter mm inch Tol.	Thread Type	Clamping Torque Nm in-lb	Limiting Speed (Grease) RPM	WT Bearing Weight kg lb
MCF 72A	MCF 72A S	11 .433	4 .157	8 .31	N/A	2.0 .08	63 2.5	24.000 .9449	+.021/-0 +.0008/- 0	M24x1.5	216 1,912	2,100	1.04 2.29
MCF 72A B	MCF 72A SB			-	14 .55								
MCF 72A X	MCF 72A SX			8 .31	N/A								
MCF 72A BX	MCF 72A SBX			-	14 .55								
MCFE 72A	MCFE 72A S	N/A	N/A	8 .31	N/A	2.0 .08	63 2.5	28.050 .1043	+0.025/-0 +0.0009/- 0	M24x1.5	216 1,912	2,100	1.04 2.29
	MCFE 72A SB			-	14 .55								
	MCFE 72A SX			8 .31	N/A								
	MCFE 72A SBX			-	14 .55								
MCFR 72A	MCFR 72A S	11 .433	4 .157	8 .31	N/A	2.0 .08	63 2.5	24.000 .9449	+.021/-0 +.0008/- 0	M24x1.5	216 1,912	3,100	1.04 2.29
MCFR 72A B	MCFR 72A SB			-	14 .55								
MCFR 72A X	MCFR 72A SX			8 .31	N/A								
MCFR 72A BX	MCFR 72A SBX			-	14 .55								
MCFRE 72A	MCFRE 72A S	N/A	N/A	8 .31	N/A	2.0 .08	63 2.5	28.050 .1043	+0.025/-0 +0.0009/- 0	M24x1.5	216 1,912	3,100	1.04 2.29
	MCFRE 72A SB			-	14 .55								
	MCFRE 72A SX			8 .31	N/A								
	MCFRE 72A SBX			-	14 .55								
MCF 80	MCF 80 S	15 .591	4 .157	8 .31	N/A	2.0 .08	63 2.5	30.000 .1811	+.021/-0 +.0008/- 0	M30x1.5	441 3,903	1,500	1.64 3.62
MCF 80 B	MCF 80 SB			-	14 .55								
MCF 80 X	MCF 80 SX			8 .31	N/A								
MCF 80 BX	MCF 80 SBX			-	14 .55								
MCFE 80	MCFE 80 S	N/A	N/A	8 .31	N/A	2.0 .08	63 2.5	35.050 .3799	+0.025/-0 +0.0009/- 0	M30x1.5	441 3,903	2,200	1.64 3.62
	MCFE 80 SB			-	14 .55								
	MCFE 80 SX			8 .31	N/A								
	MCFE 80 SBX			-	14 .55								
MCFR 80A	MCFR 80A S	15 .591	4 .157	8 .31	N/A	2.0 .08	63 2.5	30.000 .1811	+.021/-0 +.0008/- 0	M30x1.5	441 3,903	2,200	1.64 3.62
MCFR 80A B	MCFR 80A SB			-	14 .55								
MCFR 80A X	MCFR 80A SX			8 .31	N/A								
MCFR 80A BX	MCFR 80A SBX			-	14 .55								
MCFRE 80A	MCFRE 80A S	N/A	N/A	8 .31	N/A	2.0 .08	63 2.5	35.050 .3799	+0.025/-0 +0.0009/- 0	M30x1.5	441 3,903	2,200	1.64 3.62
	MCFRE 80A SB			-	14 .55								
	MCFRE 80A SX			8 .31	N/A								
	MCFRE 80A SBX			-	14 .55								

McGILL® Metric CAMROL Bearings

Basic Construction Type: Stud Type Crowned / Cylindrical Outside Diameter

Rolling Elements: Full Complement / Retained (Caged) Needle Roller

Bearing Material: Bearing Quality Steel

Seal Type: LUBRI-DISC®

Lubrication: Lithium Soap Grease NLGI #2

System Configuration: Concentric / Eccentric

Mounting Feature: Slot / Hex Hole

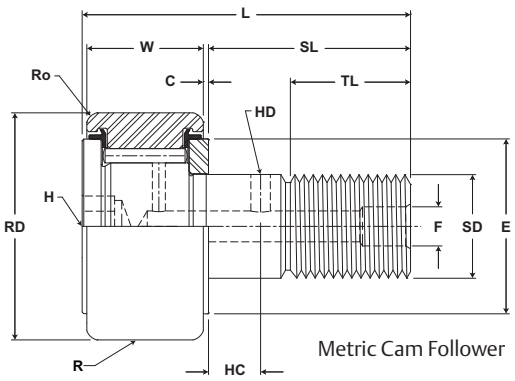

Metric Cam Follower

MCF, MCFE

Part No.		RD		W		SD		SL	C	TL	L	R	ECC	G	BD	Track Roller Dynamic Rating	Track Roller Static Rating
W/O Seals	With LUBRI-DISC Seals	Roller Diameter		Roller Width		Stud Diameter		Stud Length	Endplate Extension	Minimum Thread Length	Length Overall	Cylindrical Suffix MCF-xx-X	Eccentric Base Modifier MCFE-xx				
		mm inch		mm inch		mm inch		mm inch		mm inch		mm inch	mm inch			N/lb	N/lb
		Nom.	Tol.	Nom.	Tol.	Nom.	Tol.	(Ref)	(Ref)	(Ref)	(Ref)	Radius	(Ref)	+05/-.15 +.002/-.006	(Ref)		
MCF 80 MCF 80 B MCF 80 X MCF 80 BX	MCF 80 S MCF 80 SB MCF 80 SX MCF 80 SBX	85.000 3.3465	+0/-.050 +0/-.002 +0/-.015 +0/-.0006	35.000 1.3780	+0/-.12 +0/-.005	30.000 1.1811	+0/-.021 +0/-.0008	63 2.5	1.00 .039	32.0 1.26	100 3.9	500 19.7 Cylindrical	N/A	N/A	N/A	64,140 14,420	102,300 22,999
MCFE 80	MCFE 80 S MCFE 80 SB MCFE 80 SX MCFE 80 SBX	85.000 3.3465	+0/-.050 +0/-.002 +0/-.015 +0/-.0006	35.000 1.3780	+0/-.12 +0/-.005	30.000 1.1811	+0/-.021 +0/-.0008	63 2.5	1.00 .039	32.0 1.26	100 3.9	500 19.7 Cylindrical	1.5 .06	29 1.14	35 .38		
MCFR 85 MCFR 85 B MCFR 85 X MCFR 85 BX	MCFR 85 S MCFR 85 SB MCFR 85 SX MCFR 85 SBX	85.000 3.3465	+0/-.050 +0/-.002 +0/-.015 +0/-.0006	35.000 1.3780	+0/-.12 +0/-.005	30.000 1.1811	+0/-.021 +0/-.0008	63 2.5	1.00 .039	32.0 1.26	100 3.9	500 19.7 Cylindrical	N/A	N/A	N/A	46,680 10,495	87,600 19,694
MCFRE 85 MCFRE 85 B MCFRE 85 X MCFRE 85 BX	MCFRE 85 S MCFRE 85 SB MCFRE 85 SX MCFRE 85 SBX	85.000 3.3465	+0/-.050 +0/-.002 +0/-.015 +0/-.0006	35.000 1.3780	+0/-.12 +0/-.005	30.000 1.1811	+0/-.021 +0/-.0008	63 2.5	1.00 .039	32.0 1.26	100 3.9	500 19.7 Cylindrical	1.5 .06	29 1.14	35 .38		
MCF 90 MCF 90 B MCF 90 X MCF 90 BX	MCF 90 S MCF 90 SB MCF 90 SX MCF 90 SBX	90.000 3.5433	+0/-.050 +0/-.002 +0/-.015 +0/-.0006	35.000 1.3780	+0/-.12 +0/-.005	30.000 1.1811	+0/-.021 +0/-.0008	63 2.5	1.00 .039	32.0 1.26	100 3.9	500 19.7 Cylindrical	N/A	N/A	N/A	64,140 14,420	102,300 22,999
MCFE 90	MCFE 90 S MCFE 90 SB MCFE 90 SX MCFE 90 SBX	90.000 3.5433	+0/-.050 +0/-.002 +0/-.015 +0/-.0006	35.000 1.3780	+0/-.12 +0/-.005	30.000 1.1811	+0/-.021 +0/-.0008	63 2.5	1.00 .039	32.0 1.26	100 3.9	500 19.7 Cylindrical	1.5 .06	29 1.14	35 .38		
MCFR 90 MCFR 90 B MCFR 90 X MCFR 90 BX	MCFR 90 S MCFR 90 SB MCFR 90 SX MCFR 90 SBX	90.000 3.5433	+0/-.050 +0/-.002 +0/-.015 +0/-.0006	35.000 1.3780	+0/-.12 +0/-.005	30.000 1.1811	+0/-.021 +0/-.0008	63 2.5	1.00 .039	32.0 1.26	100 3.9	500 19.7 Cylindrical	N/A	N/A	N/A	46,680 10,495	87,600 19,694
MCFRE 90	MCFRE 90 S MCFRE 90 SB MCFRE 90 SX MCFRE 90 SBX	90.000 3.5433	+0/-.050 +0/-.002 +0/-.015 +0/-.0006	35.000 1.3780	+0/-.12 +0/-.005	30.000 1.1811	+0/-.021 +0/-.0008	63 2.5	1.00 .039	32.0 1.26	100 3.9	500 19.7 Cylindrical	1.5 .06	29 1.14	35 .38		

1. Standard bearing has a crowned roller outside diameter. For straight cylindrical outside roller diameter, add suffix "X". Example - MCFR-35-X or MCF-35-SX.
2. Clamping torque is based on dry threads. If threads are lubricated, use half of value shown.
3. Static load rating is based on stud strength or on internal rolling element load distribution stresses.
4. Dynamic load should not exceed 50% of Dynamic Rating as a track roller.
5. Since load, lubrication method, temperature and other factors affect the maximum operating speed, it is impossible to determine precise limiting speed. The listed limiting speeds are based on lightly loaded bearings having adequate lubrication and are listed only as a design guide. More frequent relubrication is required when operating at higher speeds. Actual bearing testing in the specific application should be conducted if the anticipated operating speed approaches the listed limiting speed.

Inch dimensions for reference only.
Not all parts are available from stock. Please contact customer service for availability (800) 626-2120.
For more information on bearing capabilities outside of our standard offering, please contact Application Engineering (800) 626-2093.

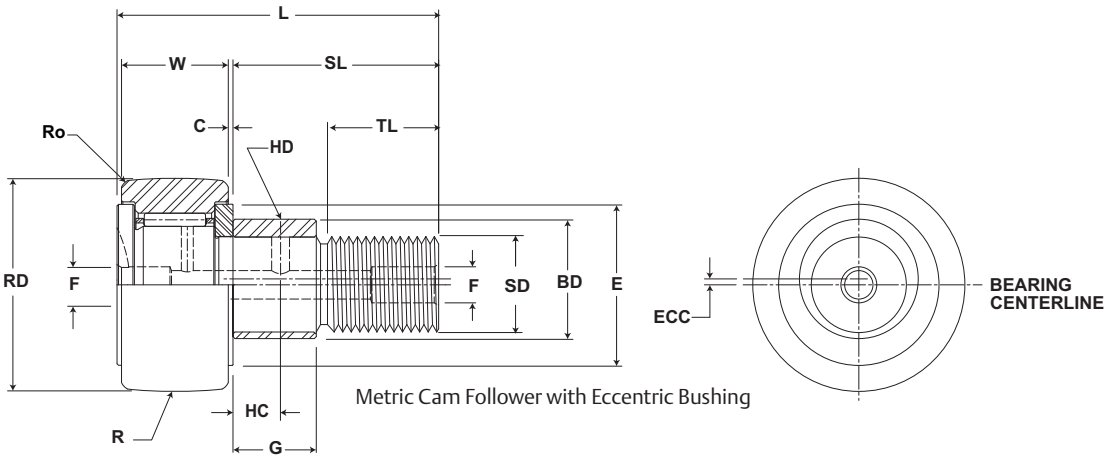

Metric Cam Follower with Eccentric Bushing

MCF, MCFE

Part No. W/O Seals	Part No. With LUBRI-DISC Seals	HC Hole Center mm (Ref) / inch (Ref)	HD Radial Lub. Hole Diameter mm (Ref) / inch (Ref)	F Lub. Hole Dia mm (Ref) / inch (Ref)	H Hex Hole Suffix MCF_xx B mm (Ref) / inch (Ref)	Ro Outer Corner mm (Ref) / inch (Ref)	E Min. Clamping Diameter mm (Ref) / inch (Ref)	Housing Bore Diameter mm Nom. / inch Nom.	Housing Bore Diameter mm Tol. / inch Tol.	Thread Type	Clamping Torque Nm / in-lb	Limiting Speed (Grease) RPM	WT Bearing Weight kg / lb
MCF 80	MCF 80 S	15 .591	4 .157	8 .31	N/A	2.0 .08	63 2.5	30.000 .1811	+.021/-0 +.0008/- 0	M30x1.5	441 3,903	1,500	1.64 3.62
MCF 80 B	MCF 80 SB			-	14 .55								
MCF 80 X	MCF 80 SX			8 .31	N/A								
MCF 80 BX	MCF 80 SBX			-	14 .55								
MCFE 80	MCFE 80 S	15 .591	4 .157	8 .31	N/A	2.0 .08	63 2.5	35.050 .3799	+0.025/-0 +0.0009/- 0	M30x1.5	441 3,903	1,500	1.64 3.62
	MCFE 80 SB			-	14 .55								
	MCFE 80 SX			8 .31	N/A								
	MCFE 80 SBX			-	14 .55								
MCFR 85	MCFR 85 S	15 .591	4 .157	8 .31	N/A	2.0 .08	63 2.5	30.000 .1811	+.021/-0 +.0008/- 0	M30x1.5	441 3,903	2,200	1.81 3.99
MCFR 85 B	MCFR 85 SB			-	14 .55								
MCFR 85 X	MCFR 85 SX			8 .31	N/A								
MCFR 85 BX	MCFR 85 SBX			-	14 .55								
MCFRE 85	MCFRE 85 S	N/A	N/A	8 .31	N/A	2.0 .08	63 2.5	35.050 .3799	+0.025/-0 +0.0009/- 0	M30x1.5	441 3,903	2,200	1.81 3.99
MCFRE 85 B	MCFRE 85 SB			-	14 .55								
MCFRE 85 X	MCFRE 85 SX			8 .31	N/A								
MCFRE 85 BX	MCFRE 85 SBX			-	14 .55								
MCF 90	MCF 90 S	15 .591	4 .157	8 .31	N/A	2.0 .08	68 2.7	30.000 .1811	+.021/-0 +.0008/- 0	M30x1.5	441 3,903	1,500	1.99 4.39
MCF 90 B	MCF 90 SB			-	14 .55								
MCF 90 X	MCF 90 SX			8 .31	N/A								
MCF 90 BX	MCF 90 SBX			-	14 .55								
MCFE 90	MCFE 90 S	15 .591	4 .157	8 .31	N/A	2.0 .08	68 2.7	35.050 .3799	+0.025/-0 +0.0009/- 0	M30x1.5	441 3,903	1,500	1.99 4.39
	MCFE 90 SB			-	14 .55								
	MCFE 90 SX			8 .31	N/A								
	MCFE 90 SBX			-	14 .55								
MCFR 90	MCFR 90 S	15 .591	4 .157	8 .31	N/A	2.0 .08	68 2.7	30.000 .1811	+.021/-0 +.0008/- 0	M30x1.5	441 3,903	2,200	1.99 4.39
MCFR 90 B	MCFR 90 SB			-	14 .55								
MCFR 90 X	MCFR 90 SX			8 .31	N/A								
MCFR 90 BX	MCFR 90 SBX			-	14 .55								
MCFRE 90	MCFRE 90 S	N/A	N/A	8 .31	N/A	2.0 .08	68 2.7	35.050 .3799	+0.025/-0 +0.0009/- 0	M30x1.5	441 3,903	2,200	1.99 4.39
	MCFRE 90 SB			-	14 .55								
	MCFRE 90 SX			8 .31	N/A								
	MCFRE 90 SBX			-	14 .55								

McGILL® Metric CAMROL Bearings

Basic Construction Type: Yoke Type Crowned / Cylindrical Outside Diameter

Rolling Elements: Full Complement / Retained (Caged) Needle Roller

Bearing Material: Bearing Quality Steel

Seal Type: LUBRI-DISC®

Lubrication: Lithium Soap Grease NLGI #2

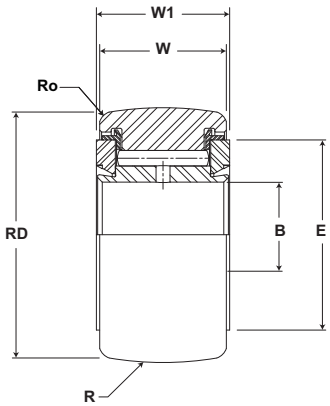

Metric Cam Yoke Roller with Crowned O.D.

MCYR

Part No.		RD		W		B		W1		R	Track Roller Dynamic Rating	Track Roller Static Rating
W/O Seals	With LUBRI-DISC Seals	Roller Diameter		Roller Width		Bore		Overall Width		Cylindrical Suffix MCYR-X		
		mm inch		mm inch		mm inch		mm inch		mm inch	N/lb	N/lb
		Nom.	Tol.	Nom.	Tol.	Nom	Tol	(Ref)	(Ref)	Radius (Ref)		
MCYR 5	MCYR 5 S	16.000 .6299	0/-0.05 +0/-0.0002	11.00 .433	+0/-.12 +0/-.005	5.000 .1969	+0/-.008 +0/-.0003	12.000 .4724	+0/-.18 +0/-.007	500 20	5,790 1,302	6,900 1,551
MCYR 5 X	MCYR 5 SX		+0/-.008 +0/-.0003							Cylindrical		
MCYRR 5	MCYRR 5 S		0/-0.05 +0/-0.0002							500 20	3,430 771	3,380 760
MCYRR 5 X	MCYRR 5 SX		+0/-.008 +0/-.0003							Cylindrical		
MCYR 6	MCYR 6 S	19.000 .7480	0/-0.05 +0/-0.0002	11.00 .433	+0/-.12 +0/-.009	6.000 .2362	+0/-.008 +0/-.0003	12.000 .4724	+0/-.18 +0/-.007	500 20	6,670 1,500	8,760 1,969
MCYR 6 X	MCYR 6 SX		+0/-.009 +0/-.0004							Cylindrical		
MCYRR 6	MCYRR 6 S		0/-0.05 +0/-0.0002							500 20	3,730 839	4,090 920
MCYRR 6 X	MCYRR 6 SX		+0/-.009 +0/-.0004							Cylindrical		
MCYR 8	MCYR 8 S	24.000 0.9449	0/-0.05 +0/-0.0002	14.00 .551	+0/-.12 +0/-.013	8.000 .3150	+0/-.008 +0/-.0003	15.000 .5906	+0/-.18 +0/-.007	500 20	9,610 2,161	12,600 2,833
MCYR 8 X	MCYR 8 SX		+0/-.009 +0/-.0004							Cylindrical		
MCYRR 8	MCYRR 8 S		0/-0.05 +0/-0.0002							500 20	5,690 1,279	6,450 1,450
MCYRR 8 X	MCYRR 8 SX		+0/-.009 +0/-.0004							Cylindrical		
MCYR 10	MCYR 10 S	30.000 1.1811	0/-0.05 +0/-0.0002	14.00 .551	+0/-.12 +0/-.017	10.000 .3937	+0/-.008 +0/-.0003	15.000 .5906	+0/-.18 +0/-.007	500 20	11,080 2,491	15,300 3,440
MCYR 10 X	MCYR 10 SX		+0/-.009 +0/-.0004							Cylindrical		
MCYRR 10	MCYRR 10 S		0/-0.05 +0/-0.0002							500 20	6,860 1,542	8,050 1,810
MCYRR 10 X	MCYRR 10 SX		+0/-.009 +0/-.0004							Cylindrical		
MCYR 12	MCYR 12 S	32.000 1.2598	0/-0.05 +0/-0.0002	14.00 .551	+0/-.12 +0/-.021	12.000 .4724	+0/-.008 +0/-.0003	15.000 .5906	+0/-.18 +0/-.007	500 20	12,060 2,711	17,400 3,912
MCYR 12 X	MCYR 12 SX		+0/-.011 +0/-.0004							Cylindrical		
MCYRR 12	MCYRR 12 S		0/-0.05 +0/-0.0002							500 20	1,260 283	9,120 2,050
MCYRR 12 X	MCYRR 12 SX		+0/-.011 +0/-.0004							Cylindrical		
MCYR 15	MCYR 15 S	35.000 1.3780	0/-0.05 +0/-0.0002	18.00 .709	+0/-.12 +0/-.025	15.000 .5906	+0/-.008 +0/-.0003	19.000 .7480	+0/-.21 +0/-.008	500 20	16,970 3,815	28,500 6,407
MCYR 15 X	MCYR 15 SX		+0/-.011 +0/-.0004							Cylindrical		
MCYRR 15	MCYRR 15 S		0/-0.05 +0/-0.0002							500 20	10,890 2,448	15,900 3,575
MCYRR 15 X	MCYRR 15 SX		+0/-.011 +0/-.0004							Cylindrical		
MCYR 17	MCYR 17 S	40.000 1.5748	0/-0.05 +0/-0.0002	20.00 .787	+0/-.12 +0/-.029	17.000 .6693	+0/-.008 +0/-.0003	21.000 .8268	+0/-.21 +0/-.008	500 20	19,420 4,366	32,200 7,239
MCYR 17 X	MCYR 17 SX		+0/-.011 +0/-.0004							Cylindrical		
MCYRR 17	MCYRR 17 S		0/-0.05 +0/-0.0002							500 20	13,340 2,999	19,700 4,429
MCYRR 17 X	MCYRR 17 SX		+0/-.011 +0/-.0004							Cylindrical		

1. Standard bearing has a crowned roller outside diameter. For straight cylindrical outside roller diameter, add suffix "X". Example - MCFR-35-X or MCF-35-SX.
2. Clamping torque is based on dry threads. If threads are lubricated, use half of value shown.
3. Static load rating is based on stud strength or on internal rolling element load distribution stresses.

Inch dimensions for reference only.
Not all parts are available from stock. Please contact customer service for availability (800) 626-2120.
For more information on bearing capabilities outside of our standard offering, please contact Application Engineering (800) 626-2093.

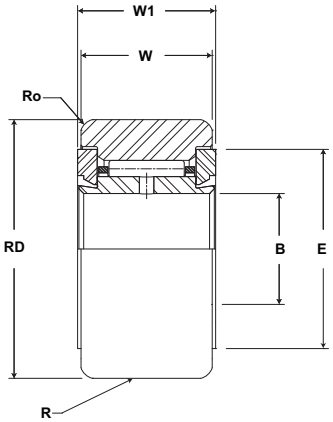

Metric Cam Yoke Roller
with Cylindrical O.D.

MCYR

Part No.		E	Ro	LF	LFT	TF	TFT	Limiting Speed	WT
W/O Seals	With LUBRI-DISC Seals	Min. Clamping Diameter	Outer Corner	Recommended Shaft Diameters: Loose Fit (for light loads) g6		Recommended Shaft Diameters: Light Fit (for medium loads) h6			Bearing Weight
		mm / inch		mm / inch		mm / inch		RPM	kg / lb
		(Ref)	(Ref)	Nom.	Tol.	Nom.	Tol.		
MCYR 5 MCYR 5 X	MCYR 5 S MCYR 5 SX	11 .4	.30 .012	4.996 .1967	+0/-.008 +0/-.0003	5.000 .1968	+0/-.0 +0/-.00	13,000	.01 .02
MCYRR 5 MCYRR 5 X	MCYRR 5 S MCYRR 5 SX							19,500	
MCYR 6 MCYR 6 X	MCYR 6 S MCYR 6 SX	13 .5	.30 .012	5.996 .2361	+0/-.008 +0/-.0003	6.000 .2362	+0/-.0 +0/-.00	10,500	.02 .04
MCYRR 6 MCYRR 6 X	MCYRR 6 S MCYRR 6 SX							15,500	
MCYR 8 MCYR 8 X	MCYR 8 S MCYR 8 SX	16 .6	.50 .020	7.995 .3148	+0/-.009 +0/-.0004	8.000 .3149	+0/-.0 +0/-.00	8,400	.04 .09
MCYRR 8 MCYRR 8 X	MCYRR 8 S MCYRR 8 SX							12,500	
MCYR 10 MCYR 10 X	MCYR 10 S MCYR 10 SX	19 .7	1.00 .039	9.995 .3935	+0/-.009 +0/-.0004	10.000 .3937	+0/-.0 +0/-.00	6,400	.06 .13
MCYRR 10 MCYRR 10 X	MCYRR 10 S MCYRR 10 SX							9,600	
MCYR 12 MCYR 12 X	MCYR 12 S MCYR 12 SX	21 .8	1.00 .039	11.994 .4722	+0/-.011 +0/-.0004	12.000 .4724	+0/-.0 +0/-.00	6,400	.07 .15
MCYRR 12 MCYRR 12 X	MCYRR 12 S MCYRR 12 SX							9,600	
MCYR 15 MCYR 15 X	MCYR 15 S MCYR 15 SX	24 0.9	1.00 .039	14.994 .5903	+0/-.011 +0/-.0004	15.000 .5905	+0/-.0 +0/-.00	4,200	.10 .22
MCYRR 15 MCYRR 15 X	MCYRR 15 S MCYRR 15 SX							6,300	
MCYR 17 MCYR 17 X	MCYR 17 S MCYR 17 SX	27 1.1	1.50 .059	16.994 .6691	+0/-.011 +0/-.0004	17.000 .6692	+0/-.0 +0/-.00	3,300	.15 .33
MCYRR 17 MCYRR 17 X	MCYRR 17 S MCYRR 17 SX							5,000	

For a tight fit and heavy loads, us ISO tolerance J6.

McGILL® Metric CAMROL Bearings

Basic Construction Type: Yoke Type Crowned / Cylindrical Outside Diameter

Rolling Elements: Full Complement / Retained (Caged) Needle Roller

Bearing Material: Bearing Quality Steel

Seal Type: LUBRI-DISC®

Lubrication: Lithium Soap Grease NLGI #2

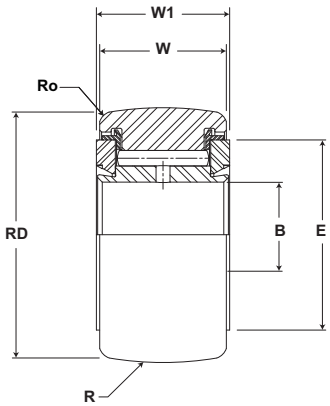

Metric Cam Yoke Roller with Crowned O.D.

MCYR

Part No.		RD		W		B		W1		R	Track Roller Dynamic Rating	Track Roller Static Rating
W/O Seals	With LUBRI-DISC Seals	Roller Diameter		Roller Width		Bore		Overall Width		Cylindrical Suffix MCYR-X		
		mm inch		mm inch		mm inch		mm inch		mm inch	N/lb	N/lb
		Nom.	Tol.	Nom.	Tol.	Nom	Tol	(Ref)	(Ref)	Radius (Ref)		
MCYR 20	MCYR 20 S	47.000 1.8504	0/-0.05 +0/-0.0002	24.00 .945	+0/-.12 +0/-.033	20.000 .7874	+0/-.010 +0/-.0004	25.000 .9843	+0/-.21 +0/-.008	500 20	25,690 5,776	48,000 10,791
MCYR 20 X	MCYR 20 SX		+0/-.011 +0/-.0004							Cylindrical		
MCYRR 20	MCYRR 20 S		0/-0.05 +0/-0.0002							500 20	17,750 3,991	29,800 6,700
MCYRR 20 X	MCYRR 20 SX		+0/-.011 +0/-.0004							Cylindrical		
MCYR 25	MCYR 25 S	52.000 2.0472	0/-0.05 +0/-0.0002	24.00 .945	+0/-.12 +0/-.037	25.000 .9843	+0/-.010 +0/-.0004	25.000 .9843	+0/-.21 +0/-.008	500 20	28,440 6,394	58,700 13,197
MCYR 25 X	MCYR 25 SX		+0/-.013 +0/-.0005							Cylindrical		
MCYRR 25	MCYRR 25 S		0/-0.05 +0/-0.0002							500 20	19,120 4,299	34,900 7,846
MCYRR 25 X	MCYRR 25 SX		+0/-.013 +0/-.0005							Cylindrical		
MCYR 30	MCYR 30 S	62.000 2.4409	0/-0.05 +0/-0.0002	29.00 1.142	+0/-.12 +0/-.041	30.000 1.1811	+0/-.010 +0/-.0004	29.000 1.1417	+0/-.21 +0/-.008	500 20	41,480 9,326	89,000 20,009
MCYR 30 X	MCYR 30 SX		+0/-.013 +0/-.0005							Cylindrical		
MCYRR 30	MCYRR 30 S		0/-0.05 +0/-0.0002							500 20	28,340 6,371	54,300 12,208
MCYRR 30 X	MCYRR 30 SX		+0/-.013 +0/-.0005							Cylindrical		
MCYR 35	MCYR 35 S	72.000 2.8346	0/-0.05 +0/-0.0002	29.00 1.142	+0/-.12 +0/-.045	35.000 1.3780	+0/-.012 +0/-.0005	29.000 1.1417	+0/-.21 +0/-.008	500 20	47,370 10,650	10,000 2,248
MCYR 35 X	MCYR 35 SX		+0/-.013 +0/-.0005							Cylindrical		
MCYRR 35	MCYRR 35 S		0/-0.05 +0/-0.0002							500 20	32,460 7,298	60,900 13,692
MCYRR 35 X	MCYRR 35 SX		+0/-.013 +0/-.0005							Cylindrical		
MCYR 40	MCYR 40 S	80.000 3.1496	0/-0.05 +0/-0.0002	35.00 1.378	+0/-.12 +0/-.049	40.000 1.5748	+0/-.012 +0/-.0005	32.000 1.2598	+0/-.25 +0/-.010	500 20	58,350 13,118	123,000 27,653
MCYR 40 X	MCYR 40 SX		+0/-.015 +0/-.0006							Cylindrical		
MCYRR 40	MCYRR 40 S		0/-0.05 +0/-0.0002							500 20	41,480 9,326	78,700 17,693
MCYRR 40 X	MCYRR 40 SX		+0/-.015 +0/-.0006							Cylindrical		
MCYR 45	MCYR 45 S	85.000 3.3465	0/-0.05 +0/-0.0002	35.00 1.378	+0/-.12 +0/-.053	45.000 1.7717	+0/-.012 +0/-.0005	32.000 1.2598	+0/-.25 +0/-.010	500 20	61,490 13,824	136,000 30,576
MCYR 45 X	MCYR 45 SX		+0/-.015 +0/-.0006							Cylindrical		
MCYRR 45	MCYRR 45 S		0/-0.05 +0/-0.0002							500 20	42,760 9,613	84,100 18,907
MCYRR 45 X	MCYRR 45 SX		+0/-.015 +0/-.0006							Cylindrical		
MCYR 50	MCYR 50 S	90.000 3.5433	0/-0.05 +0/-0.0002	35.00 1.378	+0/-.12 +0/-.057	50.000 1.9685	+0/-.012 +0/-.0005	32.000 1.2598	+0/-.25 +0/-.010	500 20	64,330 14,463	148,000 33,273
MCYR 50 X	MCYR 50 SX		+0/-.015 +0/-.0006							Cylindrical		
MCYRR 50	MCYRR 50 S		0/-0.05 +0/-0.0002							500 20	45,600 10,252	94,800 21,313
MCYRR 50 X	MCYRR 50 SX		+0/-.015 +0/-.0006							Cylindrical		

1. Standard bearing has a crowned roller outside diameter. For straight cylindrical outside roller diameter, add suffix "X". Example - MCFR-35-X or MCF-35-SX.
2. Clamping torque is based on dry threads. If threads are lubricated, use half of value shown.
3. Static load rating is based on stud strength or on internal rolling element load distribution stresses.

Inch dimensions for reference only.
Not all parts are available from stock. Please contact customer service for availability (800) 626-2120.
For more information on bearing capabilities outside of our standard offering, please contact Application Engineering (800) 626-2093.

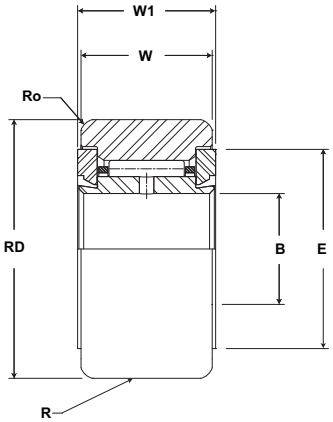

Metric Cam Yoke Roller
with Cylindrical O.D.

MCYR

Part No.		E	Ro	LF	LFT	TF	TFT	Limiting Speed	WT
W/O Seals	With LUBRI-DISC Seals	Min. Clamping Diameter	Outer Corner	Recommended Shaft Diameters					Bearing Weight
				Loose Fit (for light loads) g6		Light Fit (for medium loads) h6			
		mm inch		mm inch		mm inch		RPM	kg lb
		(Ref)	(Ref)	Nom.	Tol.	Nom.	Tol.		
MCYR 20	MCYR 20 S	30 1.2	1.50 .059	19.993 .7871	+0/-.013 +0/-.0005	20.000 .7874	+0/-.0 +0/-.00	2,600	.25 .55
MCYR 20 X	MCYR 20 SX								
MCYRR 20	MCYRR 20 S							3,900	
MCYRR 20 X	MCYRR 20 SX								
MCYR 25	MCYR 25 S	36 1.4	1.50 .059	24.993 .9840	+0/-.013 +0/-.0005	25.000 .9842	+0/-.0 +0/-.00	2,600	.29 .64
MCYR 25 X	MCYR 25 SX								
MCYRR 25	MCYRR 25 S							3,900	
MCYRR 25 X	MCYRR 25 SX								
MCYR 30	MCYR 30 S	44 1.7	2.00 .079	29.993 1.1808	+0/-.013 +0/-.0005	30.000 1.1811	+0/-.0 +0/-.00	2,100	.47 1.04
MCYR 30 X	MCYR 30 SX								
MCYRR 30	MCYRR 30 S							3,100	
MCYRR 30 X	MCYRR 30 SX								
MCYR 35	MCYR 35 S	52 2.0	2.00 .079	34.991 1.3776	+0/-.016 +0/-.0006	35.000 1.3779	+0/-.0 +0/-.00	2,100	.64 1.41
MCYR 35 X	MCYR 35 SX								
MCYRR 35	MCYRR 35 S							3,100	
MCYRR 35 X	MCYRR 35 SX								
MCYR 40	MCYR 40 S	58 2.3	2.00 .079	39.991 1.5744	+0/-.016 +0/-.0006	40.000 1.5748	+0/-.0 +0/-.00	1,500	.84 1.84
MCYR 40 X	MCYR 40 SX								
MCYRR 40	MCYRR 40 S							2,200	
MCYRR 40 X	MCYRR 40 SX								
MCYR 45	MCYR 45 S	63 2.5	2.00 .079	44.991 1.7713	+0/-.016 +0/-.0006	45.000 1.7716	+0/-.0 +0/-.00	1,500	.90 1.99
MCYR 45 X	MCYR 45 SX								
MCYRR 45	MCYRR 45 S							2,200	
MCYRR 45 X	MCYRR 45 SX								
MCYR 50	MCYR 50 S	68 2.7	2.00 .079	45.991 1.8107	+0/-.016 +0/-.0006	50.000 1.9685	+0/-.0 +0/-.00	1,500	.97 2.14
MCYR 50 X	MCYR 50 SX								
MCYRR 50	MCYRR 50 S							2,200	
MCYRR 50 X	MCYRR 50 SX								

For a tight fit and heavy loads, us ISO tolerance J6.

Heavy-Duty Inch and Metric CAMROL®

McGill Heavy-Duty CAMROL bearings are full complement cylindrical roller bearings featuring black oxide treated bearing steel, available in two basic mounting styles (stud or yoke) for use mechanical automation or linear motion applications. Our standard integral flange construction of stud version bearings helps maintain bearing integrity throughout the life. The inch series utilizes a rubber lip seal to provide a barrier for contamination and lubricant retention. Within the following section you can learn more about how these features and others can be applied to your application.

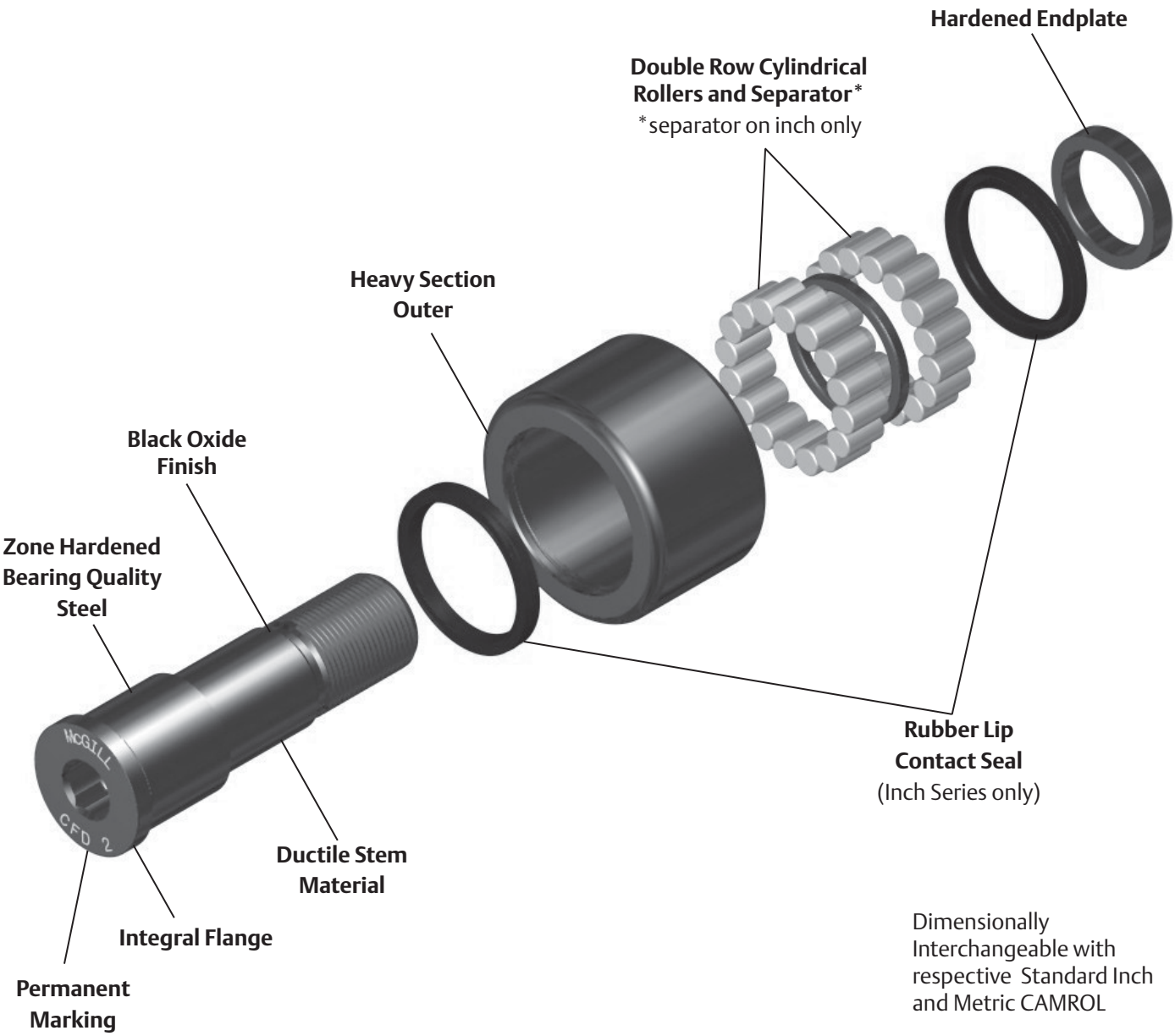

Dimensionally Interchangeable with respective Standard Inch and Metric CAMROL

Cam Follower Inch and Metric Nomenclature

Optional Prefix
- C - Crowned O.D. (Inch Series Only)
- M - Metric Series

Basic Type, Construction
- CFD - Heavy Duty Cam Follower
- CYRD - Heavy Duty Cam Yoke Roller

Construction Suffix
- E - Eccentric Bushing

Size
- Inch Series: O.D. In Inches
- Metric Stud Type: O.D. In mm
- Metric Yoke Type: Bore In mm

Optional Suffix
- B - Broached Hex Hole (Metric Series Only)
- X - Cylindrical Roller Profile (Metric Series Only)
- R - Oil Hole (Inch Series Only)

C CFD E - 1 1/2 - B

Features and Benefits

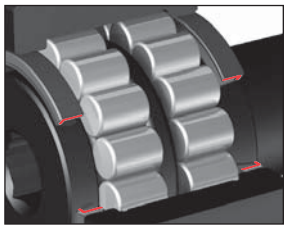

Double Row Full Complement Needle Rollers

The roller diameter to length ratio of Cylindrical rollers provides an end face and increases surface area to help support incidental thrust loads.

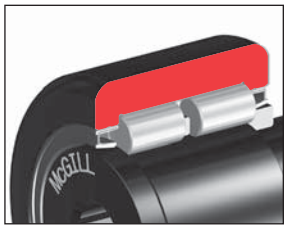

Heavy Section Outer

The heavy section outer helps support radial loading and provide proper rolling element support.

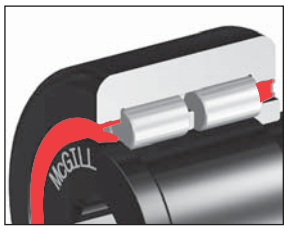

Rubber Lip Seals - Inch Series

Heavy-Duty CAMROL® Bearings have rubber lip seals to help keep contamination our and lubricant in. The seals are mounted inward to improve grease retention. Inch Only, removed as option- NS

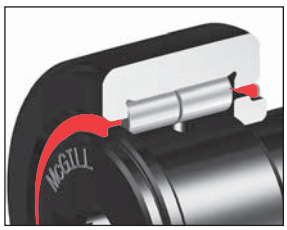

Metallic Shields - Metric Series

The metric series Heavy-Duty bearings metallic side shields providing a barriers to help retain grease and keep out containments. Metric Only, removed as option – NS

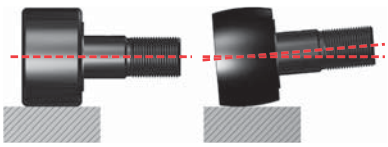

Crowned Outside Diameter (OD)

A crown on the OD of a cam follower bearing can increase bearing life versus a standard cylindrical cam follower. The crown achieves this performance by helping to distribute the stress on the outer ring and rolling elements resulting from misalignment due to mounting inaccuracy or stud deflection. The crown also helps reduce outer skidding in turntable or rotary applications. Not all applications may see the benefit of a crowned OD, consult Application Engineering for guidance for your application. Crowned OD is an option for Inch Series. Crowned OD is standard for Metric Series.

Features and Benefits continued

Cylindrical Outside Diameter (OD)

The cylindrical OD can improve performance in certain applications such as improved track capacity by maximizing the contact area with the track. Cylindrical OD is standard for Inch Series. Cylindrical OD is and option for Metric Series.

Zone Hardened Raceways

Heat treatment used to precisely harden working surfaces of the raceway and flange. The hardened surfaces provide support for the rolling element contact stresses, while keeping the core of the inner ductile to help absorb shock loads.

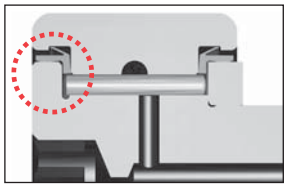

Integral Flange

The integral flange helps maintain bearing integrity throughout the bearing life. Zone hardened to provide wear resistance from incidental contact with the outer or rollers, and provides a sealing surface for rubber lipped seal.

Hex Hole (Broached)

The hex hole can aide in the installation and removal of stud type cam followers by increasing the holding power over a standard screw driver slot.
*Standard on inch, option on Metric.

Features and Benefits continued

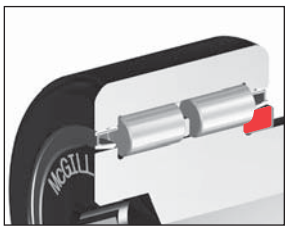

Hardened Endplate

Similar to the flange, the endplate must provide a contact surface for the seal and resist wear from incidental contact with the outer or rollers.

Factory Grease Fill

The cam follower and cam yoke roller bearings are factory lubricated with a medium temperature grease. Contact Application Engineering when application conditions require special lubricants.

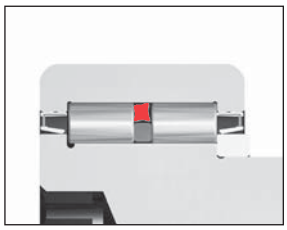

Lubrication Reservoir

The inch series heavy-Duty bearings incorporate a spacer, resulting in an increased lubricant reservoir. Inch only

Black Oxide Finish

Bearings have a black oxide finish on all external surfaces.

Options

Permanent Marking

Part number permanently marked on bearing face, helps bearing identification after years of service.

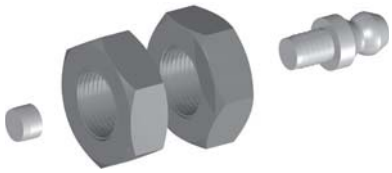

Installation Accessory Pack - Metric Series Stud Type

All McGill Metric Cam followers include (2) oil hole plug to help provide proper lubrication path to the rolling elements and prevent contamination from entering the bearing through a unused oil hole. Metric only, Inch as -OH option,

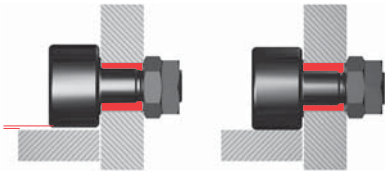

Eccentric Stud

Eccentric stud option provides a means of adjusting the radial position of the bearing, which can improve the load sharing of inline bearing combinations. Cam follower load sharing helps reduce operation costs by reducing premature failures due to overloaded bearings, the need of precise mounting hole location tolerances and providing ability to realign bearing due to track wear.

Additional Options

BHT

Broached (Hex) hole at threaded end of cam follower stud.

THT

Threaded axial lubrication hole at threaded end of cam follower stud.

THF

Threaded axial lubrication hole at flanged end of cam follower stud. Available with all screw driver slot cam followers or broached cam followers over 3”.

THB

Threaded axial oil hole on both ends of cam follower stud. Available with all screw driver slot cam followers or broached cam followers over 3”.

ALG

Annular lubrication groove at cam follower stem radial lubrication hole.

Custom Capabilities

- *Customer specified factory grease fill*
- *Grease fitting installed*
- *Stud or thread length modifications*
- *Roller diameter variations or tolerances*
- *Cam followers grouped or matched diameter tolerance / run out sets*
- *Custom engineered to order designs*

McGILL® Heavy Duty CAMROL Bearings

Basic Construction Type: Stud Type Crowned / Cylindrical Outside Diameter

Rolling Elements: Full Complement Cylindrical Roller

Bearing Material: Bearing Quality Steel

Seal Type: LUBRI-DISC

Lubrication: Lithium Soap Grease NLGI #2

System Configuration: Concentric / Eccentric / Heavy Stud

Mounting Feature: Slot / Hex Hole

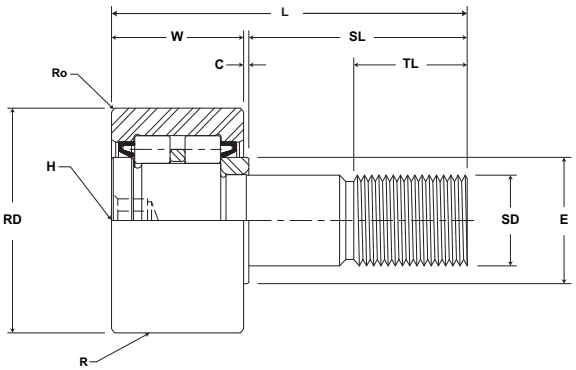

CFD

Part No.	RD		W		SD		SL	C	TL	L	R	Track Roller Dynamic Rating	Track Roller Static Rating
With Seals	Roller Diameter		Roller Width		Stud Diameter		Stud Length	Endplate Extension	Minimum Thread Length	Length Overall	Crown Prefix CCFD		
	inch mm		inch mm		inch mm		inch mm		inch mm		inch mm	lb/N	lb/N
	Nom.	Tol.	Nom.	Tol.	Nom.	Tol.	(Ref)	(Ref)	(Ref)	(Ref)	Radius		
CFD 1 1/4	1.250 31.75	+0/-.001 +0/-.03	.750 19.05	+0/-.001 +0/-.03	.500 12.70	+0/-.001 +0/-.03	1.25 31.8	.03 .8	.63 15.9	2.03 51.6	Cylindrical	3,300 14,680	2,400 10,680
CCFD 1 1/4											14 356		
CFD 1 3/8	1.375 34.93	+0/-.001 +0/-.03	.750 19.05	+0/-.001 +0/-.03	.500 12.70	+0/-.001 +0/-.03	1.25 31.8	.03 .8	.63 15.9	2.03 51.6	Cylindrical	3,600 16,000	2,400 10,680
CCFD 1 3/8											14 356		
CFD 1 1/2	1.500 38.10	+0/-.001 +0/-.03	.875 22.23	+0/-.001 +0/-.03	.625 15.88	+0/-.001 +0/-.03	1.50 38.1	.03 .8	.75 19.1	2.41 61.1	Cylindrical	5,000 22,240	4,100 18,240
CCFD 1 1/2											20 508		
CFD 1 5/8	1.625 41.28	+0/-.001 +0/-.03	.875 22.23	+0/-.001 +0/-.03	.625 15.88	+0/-.001 +0/-.03	1.50 38.1	.03 .8	.75 19.1	2.41 61.1	Cylindrical	5,400 24,020	4,100 18,240
CCFD 1 5/8											20 508		
CFD 1 3/4	1.750 44.45	+0/-.001 +0/-.03	1.000 25.40	+0/-.001 +0/-.03	.750 19.05	+0/-.001 +0/-.03	1.75 44.5	.03 .8	.88 22.2	2.78 70.6	Cylindrical	6,650 29,580	6,100 27,130
CCFD 1 3/4											20 508		
CFD 1 7/8	1.875 47.63	+0/-.001 +0/-.03	1.000 25.40	+0/-.001 +0/-.03	.750 19.05	+0/-.001 +0/-.03	1.75 44.5	.03 .8	.88 22.2	2.78 70.6	Cylindrical	7,100 31,580	6,100 27,130
CCFD 1 7/8											20 508		
CFD 2	2.000 50.80	+0/-.001 +0/-.03	1.250 31.75	+0/-.001 +0/-.03	.875 22.23	+0/-.001 +0/-.03	2.00 50.8	.03 .8	1.00 25.4	3.28 83.3	Cylindrical	9,500 42,260	8,300 36,920
CCFD 2											24 610		
CFD 2 1/4	2.250 57.15	+0/-.001 +0/-.03	1.250 31.75	+0/-.001 +0/-.03	.875 22.23	+0/-.001 +0/-.03	2.00 50.8	.03 .8	1.00 25.4	3.28 83.3	Cylindrical	10,500 46,700	8,300 36,920
CCFD 2 1/4											24 610		

Clamping torque is based on dry threads. If threads are lubricated, use half of value shown.

Metric dimensions for reference only.
Not all parts are available from stock. Please contact customer service for availability (800) 626-2120.
For more information on bearing capabilities outside of our standard offering, please contact Application Engineering (800) 626-2093.

CFD

Part No. With Seals	H Hex Hole Size (inch / mm)	E Min. Clamping Diameter (Ref) (inch / mm)	Ro Corner (Ref) (inch / mm)	Housing Bore Diameter Nom. (inch / mm)	Housing Bore Diameter Tol. (inch / mm)	Thread Type	Clamping Torque in-lb / Nm	WT Bearing Weight lb / kg
CFD 1 1/4	.25 6.4	.98 25.0	.03 .8	.5003 12.708	+.0002/-.0003 +.0005/-.0008	1/2-20	350 40	.29 .13
CCFD 1 1/4			N/A					
CFD 1 3/8	.25 6.4	.98 25.0	.05 1.2	.5003 12.708	+.0002/-.0003 +.0005/-.0012	1/2-20	350 40	.35 .16
CCFD 1 3/8			N/A					
CFD 1 1/2	.312 7.9	1.09 27.8	.06 1.6	.6253 15.883	+.0002/-.0003 +.0005/-.0016	5/8-18	650 73	.50 .22
CCFD 1 1/2			N/A					
CFD 1 5/8	.312 7.9	1.09 27.8	.06 1.6	.6253 15.883	+.0002/-.0003 +.0005/-.0020	5/8-18	650 73	.58 .26
CCFD 1 5/8			N/A					
CFD 1 3/4	.312 7.9	1.25 31.8	.06 1.6	.7503 19.058	+.0002/-.0003 +.0005/-.0024	3/4-16	1,250 141	.81 .37
CCFD 1 3/4			N/A					
CFD 1 7/8	.312 7.9	1.25 31.8	.06 1.6	.7503 19.058	+.0002/-.0003 +.0005/-.0028	3/4-16	1,250 141	.91 .41
CCFD 1 7/8			N/A					
CFD 2	.437 11.1	1.41 35.7	.09 2.4	.8753 22.233	+.0002/-.0003 +.0005/-.0032	7/8-14	1,500 170	1.29 .59
CCFD 2			N/A					
CFD 2 1/4	.437 11.1	1.41 35.7	.09 2.4	.8753 22.233	+.0002/-.0003 +.0005/-.0036	7/8-14	1,500 170	1.59 .72
CCFD 2 1/4			N/A					

Clamping torque is based on dry threads. If threads are lubricated, use half of value shown.

McGILL® Heavy Duty CAMROL Bearings

Basic Construction Type: Stud Type Crowned / Cylindrical Outside Diameter

Rolling Elements: Full Complement Cylindrical Roller

Bearing Material: Bearing Quality Steel

Seal Type: LUBRI-DISC®

Lubrication: Lithium Soap Grease NLGI #2

System Configuration: Concentric / Eccentric / Heavy Stud

Mounting Feature: Slot / Hex Hole

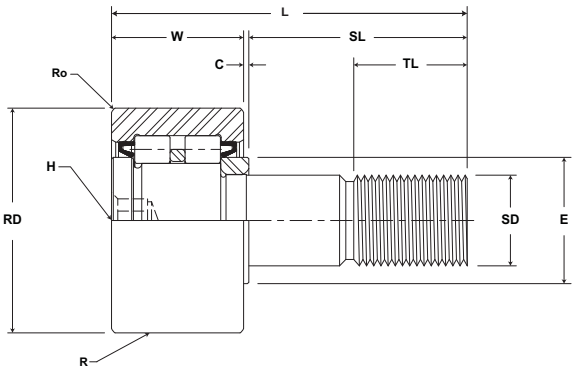

CFD

Part No.	RD		W		SD		SL	C	TL	L	R	Track Roller Dynamic Rating	Track Roller Static Rating
With Seals	Roller Diameter		Roller Width		Stud Diameter		Stud Length	Endplate Extension	Minimum Thread Length	Length Overall	Crown Prefix CCFD		
	inch mm		inch mm		inch mm		inch mm		inch mm		inch mm	lb/N	lb/N
	Nom.	Tol.	Nom.	Tol.	Nom.	Tol.	(Ref)	(Ref)	(Ref)	(Ref)	Radius		
CFD 2 1/2	2.500 63.50	+0/-.001 +0/-.03	1.500 38.10	+0/-.001 +0/-.03	1.000 25.40	+0/-.001 +0/-.03	2.25 57.2	.03 .8	1.125 28.6	3.78 96.0	Cylindrical	14,000 62,270	10,400 46,260
CCFD 2 1/2											30 762		
CFD 2 3/4	2.750 69.85	+0/-.001 +0/-.03	1.500 38.10	+0/-.001 +0/-.03	1.000 25.40	+0/-.001 +0/-.03	2.25 57.2	.03 .8	1.125 28.6	3.78 96.0	Cylindrical	15,000 66,720	10,400 46,260
CCFD 2 3/4											30 762		
CFD 3	3.000 76.20	+0/-.001 +0/-.03	1.750 44.45	+0/-.001 +0/-.03	1.250 31.75	+0/-.001 +0/-.03	2.50 63.5	.03 .8	1.25 31.7	4.28 108.7	Cylindrical	18,300 81,400	18,100 80,510
CCFD 3											30 762		
CFD 3 1/4	3.250 82.55	+0/-.001 +0/-.03	1.750 44.45	+0/-.001 +0/-.03	1.250 31.75	+0/-.001 +0/-.03	2.50 63.5	.03 .8	1.25 31.7	4.28 108.7	Cylindrical	20,300 90,290	18,100 80,510
CCFD 3 1/4											30 762		
CFD 3 1/2	3.500 88.90	+0/-.001 +0/-.03	2.000 50.80	+0/-.001 +0/-.03	1.375 34.93	+0/-.001 +0/-.03	2.75 69.9	.03 .8	1.375 34.9	4.78 121.4	Cylindrical	23,700 105,420	21,500 95,630
CCFD 3 1/2											30 762		
CFD 4	4.000 101.60	+0/-.001 +0/-.03	2.250 57.15	+0/-.001 +0/-.03	1.500 38.10	+0/-.001 +0/-.03	3.50 88.9	.03 .8	1.50 38.1	5.78 146.8	Cylindrical	32,500 144,560	22,800 101,410
CCFD 4											30 762		
CFD 5	5.000 127.00	+0/-.001 +0/-.03	2.750 69.85	+0/-.001 +0/-.03	2.000 50.80	+0/-.001 +0/-.03	5.06 128.6	.06 1.6	2.00 50.4	7.88 200.0	Cylindrical	50,500 224,620	50,800 225,960
CCFD 5											48 1,219		
CFD 6	6.000 152.40	+0/-.001 +0/-.03	3.250 82.55	+0/-.001 +0/-.03	2.500 63.50	+0/-.001 +0/-.03	6.00 152.4	.06 1.6	2.50 63.5	9.31 236.5	Cylindrical	71,500 318,030	86,100 382,970
CCFD 6											30 762		

Metric dimensions for reference only.
Not all parts are available from stock. Please contact customer service for availability (800) 626-2120.
For more information on bearing capabilities outside of our standard offering, please contact Application Engineering (800) 626-2093.

CFD

Part No. With Seals	H Hex Hole Size (inch / mm)	E Min. Clamping Diameter (Ref) (inch / mm)	Ro Corner (Ref) (inch / mm)	Housing Bore Diameter Nom. (inch / mm)	Housing Bore Diameter Tol. (inch / mm)	Thread Type	Clamping Torque in-lb / Nm	WT Bearing Weight lb / kg
CFD 2 1/2	.50 12.7	1.69 42.9	.09 2.4	1.0003 25.408	+.0002/-.0003 +.0005/-.0040	1-14	2,250 254	2.38 1.08
CCFD 2 1/2			N/A					
CFD 2 3/4	.50 12.7	1.69 42.9	.09 2.4	1.0003 25.408	+.0002/-.0003 +.0005/-.0044	1-14	2,250 254	2.93 1.33
CCFD 2 3/4			N/A					
CFD 3	.75 19.1	2.13 54.0	.13 3.2	1.2503 31.758	+.0002/-.0003 +.0005/-.0048	1 1/4-12	3,450 390	4.20 1.91
CCFD 3			N/A					
CFD 3 1/4	.75 19.1	2.13 54.0	.13 3.2	1.2503 31.758	+.0002/-.0003 +.0005/-.0052	1 1/4-12	3,450 390	4.52 2.05
CCFD 3 1/4			N/A					
CFD 3 1/2	.75 19.1	2.44 61.9	.13 3.2	1.3753 34.933	+.0002/-.0003 +.0005/-.0056	1 3/8-12	4,200 475	5.99 2.72
CCFD 3 1/2			N/A					
CFD 4	.75 19.1	2.80 71.0	.13 3.2	1.5003 38.108	+.0002/-.0003 +.0005/-.0060	1 1/2-12	5,000 565	8.97 4.07
CCFD 4			N/A					
CFD 5	.875 22.2	3.56 90.5	.13 3.2	2.0003 50.808	+.0002/-.0003 +.0005/-.0064	2-12	5,000 565	18.37 8.33
CCFD 5			N/A					
CFD 6	1.00 25.4	4.47 113.5	.13 3.2	2.5003 63.508	+.0002/-.0003 +.0005/-.0068	2 1/2-12	5,000 565	31.99 14.51
CCFD 6			N/A					

Clamping torque is based on dry threads. If threads are lubricated, use half of value shown.

McGILL® Heavy Duty CAMROL Bearings

Basic Construction Type: Yoke Type Crowned / Cylindrical Outside Diameter

Rolling Elements: Full Complement Cylindrical Roller

Bearing Material: Bearing Quality Steel

Seal Type: Rubber Lip Seal

Lubrication: Lithium Soap Grease NLGI #2

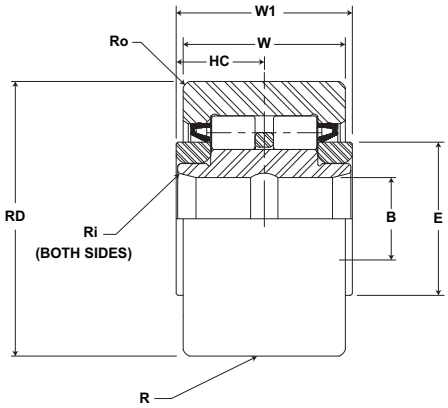

CYRD

Part No.	RD		W		B		W1		R	Track Roller Dynamic Rating	Track Roller Static Rating
With Seals	Roller Diameter		Roller Width		Bore Diameter		Overall Width		Crown Prefix CCYRD-XX		
	inch mm		inch mm		inch mm		inch mm			lb/N	lb/N
	Nom.	Tol.	Nom.	Tol.	Nom	Tol	Nom.	Tol.	Radius		
CYRD 1 1/4	1.250 31.75	+0/-.001 +0/-.03	.750 9.05	+0/-.001 +0/-.03	.375 9.53	+.0002/-.0004 +.0005/-.0010	.8125 20.6	+0.005/-0.01 +0.13/-0.25	Cylindrical	3,300 14,680	2,400 10,680
CCYRD 1 1/4									14 356		
CYRD 1 3/8	1.375 34.93	+0/-.001 +0/-.03	.750 9.05	+0/-.001 +0/-.05	.375 9.53	+.0002/-.0004 +.0005/-.0010	.8125 20.6	+0.005/-0.01 +0.13/-0.25	Cylindrical	3,600 16,000	2,400 10,680
CCYRD 1 3/8									14 356		
CYRD 1 1/2	1.500 38.10	+0/-.001 +0/-.03	.875 2.23	+0/-.001 +0/-.07	.438 1.11	+.0002/-.0004 +.0005/-.0010	.9375 23.8	+0.005/-0.01 +0.13/-0.25	Cylindrical	5,000 22,240	4,100 18,240
CCYRD 1 1/2									20 508		
CYRD 1 5/8	1.625 41.28	+0/-.001 +0/-.03	.875 2.23	+0/-.001 +0/-.09	.438 1.11	+.0002/-.0004 +.0005/-.0010	.9375 23.8	+0.005/-0.01 +0.13/-0.25	Cylindrical	5,400 24,020	4,100 18,240
CCYRD 1 5/8									20 508		
CYRD 1 3/4	1.750 44.45	+0/-.001 +0/-.03	1.000 25.40	+0/-.001 +0/-.11	.500 2.70	+.0002/-.0004 +.0005/-.0010	1.0625 27.0	+0.005/-0.01 +0.13/-0.25	Cylindrical	6,650 29,580	6,100 27,130
CCYRD 1 3/4									20 508		
CYRD 1 7/8	1.875 47.63	+0/-.001 +0/-.03	1.000 25.40	+0/-.001 +0/-.13	.500 2.70	+.0002/-.0004 +.0005/-.0010	1.0625 27.0	+0.005/-0.01 +0.13/-0.25	Cylindrical	7,100 31,580	6,100 27,130
CCYRD 1 7/8									20 508		
CYRD 2	2.000 50.80	+0/-.001 +0/-.03	1.250 31.75	+0/-.001 +0/-.15	.625 5.88	+.0002/-.0004 +.0005/-.0010	1.3125 33.3	+0.005/-0.01 +0.13/-0.25	Cylindrical	9,500 42,260	8,300 36,920
CCYRD 2									24 610		
CYRD 2 1/4	2.250 57.15	+0/-.001 +0/-.03	1.250 31.75	+0/-.001 +0/-.17	.625 5.88	+.0002/-.0004 +.0005/-.0010	1.3125 33.3	+0.005/-0.01 +0.13/-0.25	Cylindrical	10,500 46,700	8,300 36,920
CCYRD 2 1/4									24 610		

Metric dimensions for reference only.
Not all parts are available from stock. Please contact customer service for availability (800) 626-2120.
For more information on bearing capabilities outside of our standard offering, please contact Application Engineering (800) 626-2093.

CYRD

Part No.	HC	E	Ri	Ro	Recommended Shaft Diameters						WT
With Seals	Hole Center	Min. Clamping Diameter	Outer Corner Radius	Inner Corner Radius	Push Fit		Drive Fit		Press Fit		Bearing Weight
	inch mm		inch mm		inch mm		inch mm		inch mm		lb kg
	(Ref)	(Ref)	(Ref)	(Ref)	Nom	Tol	Nom	Tol	Nom	Tol	
CYRD 1 1/4 CCYRD 1 1/4	.31 7.9	.98 5.0	.03 0.8	.03 0.8	.3745 9.512	±.0002 ±.005	.3751 9.53	±.0002 ±.005	.3753 9.53	±.0002 ±.005	.21 .09
CYRD 1 3/8 CCYRD 1 3/8	.31 7.9	.98 5.0	.03 0.8	.05 1.2	.3745 9.512	±.0002 ±.005	.3751 9.53	±.0002 ±.005	.3753 9.53	±.0002 ±.005	.26 .12
CYRD 1 1/2 CCYRD 1 1/2	.38 9.5	1.09 27.8	.04 1.0	.06 1.6	.4370 1.100	±.0002 ±.005	.4376 11.12	±.0002 ±.005	.4378 11.12	±.0002 ±.005	.35 .16
CYRD 1 5/8 CCYRD 1 5/8	.38 9.5	1.09 27.8	.04 1.0	.06 1.6	.4370 1.100	±.0002 ±.005	.4376 11.12	±.0002 ±.005	.4378 11.12	±.0002 ±.005	.43 .19
CYRD 1 3/4 CCYRD 1 3/4	.44 1.1	1.25 31.8	.05 1.3	.06 1.6	.4995 2.687	±.0002 ±.005	.5001 12.70	±.0002 ±.005	.5005 12.71	±.0002 ±.005	.57 .26
CYRD 1 7/8 CCYRD 1 7/8	.44 1.1	1.25 31.8	.05 1.3	.06 1.6	.4995 2.687	±.0002 ±.005	.5001 12.70	±.0002 ±.005	.5005 12.71	±.0002 ±.005	.66 .29
CYRD 2 CCYRD 2	.50 2.7	1.41 35.7	.06 1.5	.09 2.4	.6245 5.862	±.0002 ±.005	.6251 15.88	±.0002 ±.005	.6255 15.89	±.0002 ±.005	.88 .39
CYRD 2 1/4 CCYRD 2 1/4	.50 2.7	1.41 35.7	.06 1.5	.09 2.4	.6245 5.862	±.0002 ±.005	.6251 15.88	±.0002 ±.005	.6255 15.89	±.0002 ±.005	1.18 .54

McGILL® Heavy Duty CAMROL Bearings

Basic Construction Type: Yoke Type Crowned / Cylindrical Outside Diameter

Rolling Elements: Full Complement Cylindrical Roller

Bearing Material: Bearing Quality Steel

Seal Type: Rubber Lip Seal

Lubrication: Lithium Soap Grease NLGI #2

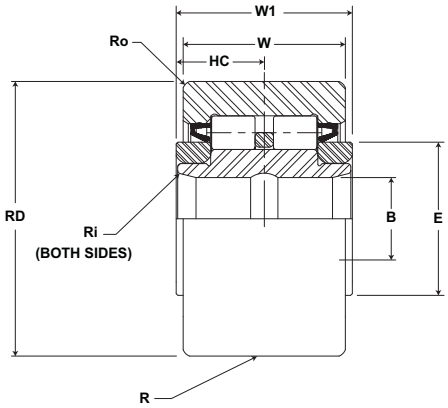

CYRD

Part No.	RD		W		B		W1		R	Track Roller Dynamic Rating	Track Roller Static Rating
With Seals	Roller Diameter		Roller Width		Bore Diameter		Overall Width		Crown Prefix CCYRD-XX		
	inch mm		inch mm		inch mm		inch mm			lb/N	lb/N
	Nom.	Tol.	Nom.	Tol.	Nom	Tol	Nom.	Tol.	Radius		
CYRD 2 1/2	2.500 63.50	+0/-.001 +0/-.03	1.500 38.10	+0/-.001 +0/-.19	.750 9.05	+.0002/-.0004 +.0005/-.0010	1.5625 39.7	+0.005/-0.01 +0.13/-0.25	Cylindrical	14,000 62,270	10,400 46,260
CCYRD 2 1/2									30 762		
CYRD 2 3/4	2.750 69.85	+0/-.001 +0/-.03	1.500 38.10	+0/-.001 +0/-.21	.750 9.05	+.0002/-.0004 +.0005/-.0010	1.5625 39.7	+0.005/-0.01 +0.13/-0.25	Cylindrical	15,000 66,720	10,400 46,260
CCYRD 2 3/4									30 762		
CYRD 3	3.000 76.20	+0/-.001 +0/-.03	1.750 44.45	+0/-.001 +0/-.23	1.000 25.40	+.0001/-.0005 +.0003/-.0013	1.8125 46.0	+0.005/-0.01 +0.13/-0.25	Cylindrical	18,300 81,400	18,100 80,510
CCYRD 3									30 762		
CYRD 3 1/4	3.250 82.55	+0/-.001 +0/-.03	1.750 44.45	+0/-.001 +0/-.25	1.000 25.40	+.0001/-.0005 +.0003/-.0013	1.8125 46.0	+0.005/-0.01 +0.13/-0.25	Cylindrical	20,300 90,290	18,100 80,510
CCYRD 3 1/4									30 762		
CYRD 3 1/2	3.500 88.90	+0/-.001 +0/-.03	2.000 50.80	+0/-.001 +0/-.27	1.125 28.58	+.0001/-.0005 +.0003/-.0013	2.0625 52.4	+0.005/-0.01 +0.13/-0.25	Cylindrical	23,700 105,420	21,500 95,630
CCYRD 3 1/2									30 762		
CYRD 4	4.000 101.60	+0/-.001 +0/-.03	2.250 57.15	+0/-.001 +0/-.29	1.250 31.75	+.0001/-.0005 +.0003/-.0013	2.3125 58.7	+0.005/-0.01 +0.13/-0.25	Cylindrical	32,500 144,560	22,800 101,410
CCYRD 4									30 762		
CYRD 5	5.000 127.00	+0/-.001 +0/-.03	2.750 69.85	+0/-.001 +0/-.31	1.750 44.45	+.0001/-.0005 +.0003/-.0013	2.875 73.0	+0.005/-0.01 +0.13/-0.25	Cylindrical	50,500 224,620	50,800 225,960
CCYRD 5									48 1,219		
CYRD 6	6.000 152.40	+0/-.001 +0/-.03	3.250 82.55	+0/-.001 +0/-.33	2.250 57.15	+.0001/-.0005 +.0003/-.0013	3.375 85.7	+0.005/-0.01 +0.13/-0.25	Cylindrical	71,500 318,030	86,100 382,970
CCYRD 6									56 1,422		

Metric dimensions for reference only.
Not all parts are available from stock. Please contact customer service for availability (800) 626-2120.
For more information on bearing capabilities outside of our standard offering, please contact Application Engineering (800) 626-2093.

CYRD

Part No.	HC	E	Ri	Ro	Recommended Shaft Diameters						WT
With Seals	Hole Center	Min. Clamping Diameter	Outer Corner Radius	Inner Corner Radius	Push Fit		Drive Fit		Press Fit		Bearing Weight
	inch mm		inch mm		inch mm		inch mm		inch mm		lb kg
	(Ref)	(Ref)	(Ref)	(Ref)	Nom	Tol	Nom	Tol	Nom	Tol	
CYRD 2 1/2 CCYRD 2 1/2	.56 4.3	1.69 42.9	.07 1.8	.09 2.4	.7495 9.037	±.0002 ±.005	.7501 19.05	±.0002 ±.005	.7505 19.06	±.0002 ±.005	1.74 .79
CYRD 2 3/4 CCYRD 2 3/4	.56 4.3	1.69 42.9	.07 1.8	.09 2.4	.7495 9.037	±.0002 ±.005	.7501 19.05	±.0002 ±.005	.7505 19.06	±.0002 ±.005	2.17 .98
CYRD 3 CCYRD 3	.63 5.9	2.13 54.0	.08 2.0	.13 3.2	.9994 5.385	±.0002 ±.005	1.002 25.5	±.0002 ±.005	1.006 25.55	±.0002 ±.005	3.08 1.39
CYRD 3 1/4 CCYRD 3 1/4	.63 5.9	2.13 54.0	.08 2.0	.13 3.2	.9994 5.385	±.0002 ±.005	1.002 25.5	±.0002 ±.005	1.006 25.55	±.0002 ±.005	3.62 1.64
CYRD 3 1/2 CCYRD 3 1/2	.69 7.5	2.44 61.9	.09 2.3	.13 3.2	1.1244 28.560	±.0002 ±.005	1.1252 28.58	±.0002 ±.005	1.1256 28.59	±.0002 ±.005	4.41 2.00
CYRD 4 CCYRD 4	.75 9.1	2.80 71.0	.10 2.5	.13 3.2	1.2494 31.735	±.0002 ±.005	1.2502 31.76	±.0002 ±.005	1.2506 31.77	±.0002 ±.005	6.57 2.98
CYRD 5 CCYRD 5	.88 2.2	3.56 90.5	.11 2.8	.13 3.2	1.7494 44.435	±.0002 ±.005	1.7502 44.46	±.0002 ±.005	1.7506 44.47	±.0002 ±.005	12.33 5.59
CYRD 6 CCYRD 6	1.00 25.4	4.47 113.5	.12 3.0	.13 3.2	2.2494 57.135	±.0002 ±.005	2.2502 57.16	±.0002 ±.005	2.2506 57.17	±.0002 ±.005	20.47 9.29

McGILL® Heavy Duty CAMROL Bearings

Basic Construction Type: Stud Type Crowned / Cylindrical Outside Diameter

Rolling Elements: Full Complement Cylindrical Roller

Bearing Material: Bearing Quality Steel

Seal Type: Metallic Shield

Lubrication: Lithium Soap Grease NLGI #2

System Configuration: Concentric / Eccentric

Mounting Feature: Slot / Hex Hole

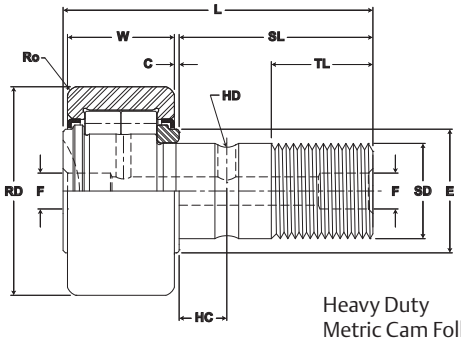

Heavy Duty Metric Cam Follower

MCFD, MCFDE

Part No.	RD		W		SD		SL	C	TL	L	R	ECC	G	BD	Track Roller Dynamic Rating	Track Roller Static Rating
With Shields	Roller Diameter		Roller Width		Stud Diameter		Stud Length	Endplate Extension	Minimum Thread Length	Length Overall	Cylindrical Suffix MCFD-xx-X	Eccentric Base Modifier MCFDE-xx				
	mm inch		mm inch		mm inch		mm inch		mm inch		mm inch	mm inch			N/lb	N/lb
	Nom.	Tol.	Nom.	Tol.	Nom.	Tol.	(Ref)	(Ref)	(Ref)	(Ref)	(Ref)	(Ref)	+05/-.15 (+.002 / -.006)	See Table		
MCFD 35	35.000 1.3780	+0/-.050 +0/-.002	18.00 .709	+0/.12 +0/-.005	16.000 .6299	+0/-.018 +0/-.0007	32.50 1.280	.80 .031	17.00 .669	52.00 2.047	500 20	N/A	N/A	N/A	16,000 3,597	18,000 4,047
MCFDE 35												0.5 .02	14 0.55	20 .79		
MCFD 35 X		+0/-.011 +0/-.0004									Cylindrical	N/A	N/A	N/A		
MCFDE 35 X												0.5 .02	14 0.55	20 .79		
MCFD 40	40.000 1.5748	+0/-.050 +0/-.002	20.00 .787	+0/.12 +0/-.009	18.000 .7087	+0/-.018 +0/-.0007	36.50 1.437	.80 .031	19.00 .748	58.00 2.283	500 20	N/A	N/A	N/A	18,000 4,047	22,000 4,946
MCFDE 40												1 .04	16 0.63	22 .87		
MCFD 40 X		+0/-.011 +0/-.0004									Cylindrical	N/A	N/A	N/A		
MCFDE 40 X												1 .04	16 0.63	22 .87		
MCFD 47	47.000 1.8504	+0/-.050 +0/-.002	24.00 .945	+0/.12 +0/-.013	20.000 .7874	+0/-.021 +0/-.0008	40.50 1.594	.80 .031	21.00 .827	66.00 2.598	500 20	N/A	N/A	N/A	27,000 6,070	32,000 7,194
MCFDE 47												1 .04	18 0.71	24 .94		
MCFD 47 X		+0/-.011 +0/-.0004									Cylindrical	N/A	N/A	N/A		
MCFDE 47 X												1 .04	18 0.71	24 .94		
MCFD 52	52.000 2.0472	+0/-.050 +0/-.002	24.00 .945	+0/.12 +0/-.017	20.000 .7874	+0/-.021 +0/-.0008	40.50 1.594	.80 .031	21.00 .827	66.00 2.598	500 20	N/A	N/A	N/A	30,000 6,745	35,000 7,869
MCFDE 52												1 .04	18 0.71	24 .94		
MCFD 52 X		+0/-.013 +0/-.0005									Cylindrical	N/A	N/A	N/A		
MCFDE 52 X												1 .04	18 0.71	24 .94		
MCFD 62	62.000 2.4409	+0/-.050 +0/-.002	29.00 1.142	+0/.12 +0/-.021	24.000 .9449	+0/-.021 +0/-.0008	49.50 1.949	.80 .031	25.00 .984	80.00 3.150	500 20	N/A	N/A	N/A	41,000 9,218	48,000 10,791
MCFDE 62												1 .04	22 0.87	28 .10		
MCFD 62 X		+0/-.013 +0/-.0005									Cylindrical	N/A	N/A	N/A		
MCFDE 62 X												1 .04	22 0.87	28 .10		

1. Standard bearing has a crowned roller outside diameter. For straight cylindrical outside roller diameter, add suffix "X". Example - MCFD-35-X.
2. Since load, lubrication method, temperature and other factors affect the maximum operating speed, it is impossible to determine precise limiting speed. The listed limiting speeds are based on lightly loaded bearings having adequate lubrication and are listed only as a design guide. If grease lubricated, frequent relubrication is required. Actual bearing testing in the specific application should be conducted if the anticipated operating speed approaches the listed limiting speed.
3. Clamping torque is based on dry threads. If threads are lubricated, use half of value shown.

Inch dimensions for reference only.
Not all parts are available from stock. Please contact customer service for availability (800) 626-2120.
For more information on bearing capabilities outside of our standard offering, please contact Application Engineering (800) 626-2093.

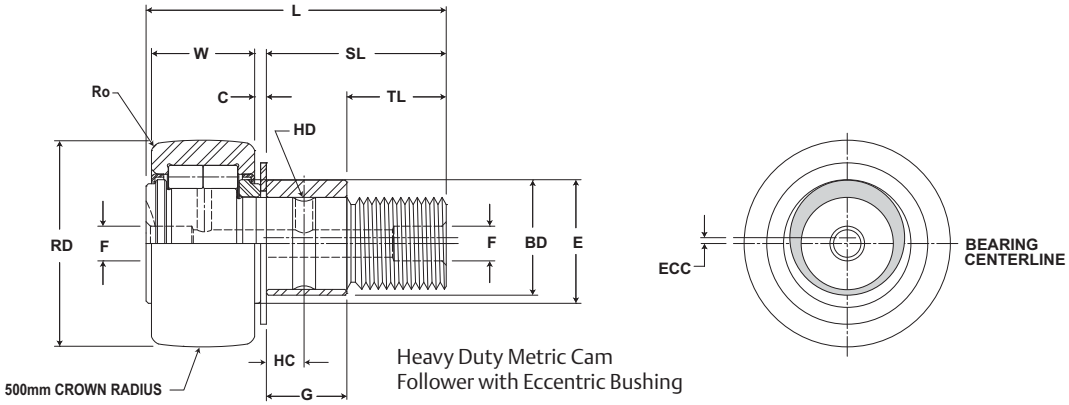

Heavy Duty Metric Cam Follower with Eccentric Bushing

MCFD, MCFDE

Part No.	HC	HD	D	E	Ro	HBD	sdt	Thread Type	CT	LSD	WT
With Shields	Hole Center	Radial Lub. Hole Diameter	Lub. Hole Dia. / Lub. Fitting	Min. Clamping Diameter	Outer Radius (suffix X)	Housing Bore Diameter		Thread Type	Clamping Torque	Limiting Speed (Grease)	Bearing Weight
	mm inch		mm inch		mm inch				Nm in-lb	RPM	kg lb
	(Ref)	(Ref)	(Ref)	(Ref)	(Ref)	Nom.	Tol.				
MCFD 35	8.00 .315	3.00 .118	6.00 .236	21.00 .827	1.00 .039	16.000 .6299	+0/-.018 +0/-.0007	M16x1.5	85 752	6,500	.16 .36
MCFDE 35											
MCFD 35 X											
MCFDE 35 X											
MCFD 40	8.00 .315	3.00 .118	6.00 .236	23.00 .906	1.50 .059	18.000 .7087	+0/-.018 +0/-.0007	M18x1.5	85 752	5,500	.24 .53
MCFDE 40											
MCFD 40 X											
MCFDE 40 X											
MCFD 47	9.00 .354	4.00 .157	8.00 .315	27.00 1.063	1.50 .059	20.000 .7874	+0/-.021 +0/-.0008	M20x1.5	118 1,044	4,200	.38 .84
MCFDE 47											
MCFD 47 X											
MCFDE 47 X											
MCFD 52	9.00 .354	4.00 .157	8.00 .315	21.00 .827	1.50 .059	20.000 .7874	+0/-.021 +0/-.0008	M20x1.5	118 1,044	3,400	.45 .99
MCFDE 52											
MCFD 52 X											
MCFDE 52 X											
MCFD 62	11.00 .433	4.00 .157	8.00 .315	38.00 1.496	2.00 .079	24.000 .9449	+0/-.021 +0/-.0008	M24x1.5	216 1,912	2,600	.80 1.75
MCFDE 62											
MCFD 62 X											
MCFDE 62 X											

McGILL® Heavy Duty CAMROL Bearings

Basic Construction Type: Stud Type Crowned / Cylindrical Outside Diameter

Rolling Elements: Full Complement Cylindrical Roller

Bearing Material: Bearing Quality Steel

Seal Type: Metallic Shield

Lubrication: Lithium Soap Grease NLGI #2

System Configuration: Concentric / Eccentric / Heavy Stud

Mounting Feature: Slot / Hex Hole

Dimensional Interchange: ISO Standard

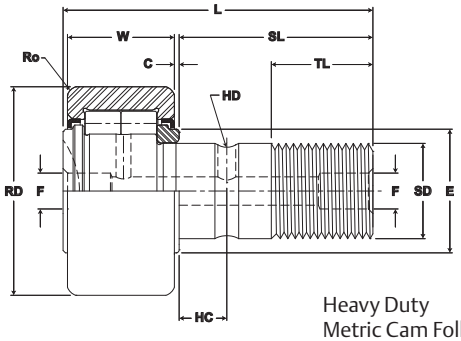

Heavy Duty Metric Cam Follower

MCFD, MCFDE

Part No.	RD		W		SD		SL	C	TL	L	R	ECC	G	BD	Track Roller Dynamic Rating	Track Roller Static Rating
With Shields	Roller Diameter		Roller Width		Stud Diameter		Stud Length	Endplate Extension	Minimum Thread Length	Length Overall	Cylindrical Suffix MCFD-xx-X	Eccentric Base Modifier MCFDE-xx				
	mm inch		mm inch		mm inch		mm inch		mm inch		mm inch	mm inch			N/lb	N/lb
	Nom.	Tol.	Nom.	Tol.	Nom.	Tol.	(Ref)	(Ref)	(Ref)	(Ref)	(Ref)	(Ref)	+05/-.15 (+.002 / -.006)	See Table		
MCFD 72	72.000 2.8346	+0/-.050 +0/-.002	29.00 1.142	+0/.12 +0/-.025	24.000 .9449	+0/-.021 +0/-.0008	49.50 1.949	.80 .031	25.00 .984	80.00 3.150	500 20	N/A	N/A	N/A	46,000 10,342	57,000 12,815
MCFDE 72												1 .04	22 0.87	28 .10		
MCFD 72 X		+0/-.013 +0/-.0005									Cylindrical	N/A	N/A	N/A		
MCFDE 72 X												1 .04	22 0.87	28 .10		
MCFD 80	80.000 3.1496	+0/-.050 +0/-.002	35.00 1.378	+0/.12 +0/-.029	30.000 1.1811	+0/-.021 +0/-.0008	63.00 2.480	1.00 .039	32.00 1.260	100.00 3.937	500 20	N/A	N/A	N/A	67,000 15,063	91,000 20,459
MCFDE 80												1.5 .06	29 1.14	35 .38		
MCFD 80 X		+0/-.015 +0/-.0006									Cylindrical	N/A	N/A	N/A		
MCFDE 80 X												1.5 .06	29 1.14	35 .38		
MCFD 90	90.000 3.5433	+0/-.050 +0/-.002	35.00 1.378	+0/.12 +0/-.033	30.000 1.1811	+0/-.021 +0/-.0008	63.00 2.480	1.00 .039	32.00 1.260	100.00 3.937	500 20	N/A	N/A	N/A	67,000 15,063	101,000 22,707
MCFDE 90												1.5 .06	29 1.14	35 .38		
MCFD 90 X		+0/-.015 +0/-.0006									Cylindrical	N/A	N/A	N/A		
MCFDE 90 X												1.5 .06	29 1.14	35 .38		

1. Standard bearing has a crowned roller outside diameter. For straight cylindrical outside roller diameter, add suffix "X". Example - MCFD-35-X.
2. Since load, lubrication method, temperature and other factors affect the maximum operating speed, it is impossible to determine precise limiting speed. The listed limiting speeds are based on lightly loaded bearings having adequate lubrication and are listed only as a design guide. If grease lubricated, frequent relubrication is required. Actual bearing testing in the specific application should be conducted if the anticipated operating speed approaches the listed limiting speed.
3. Clamping torque is based on dry threads. If threads are lubricated, use half of value shown.

Metric dimensions for reference only.
Not all parts are available from stock. Please contact customer service for availability (800) 626-2120.
For more information on bearing capabilities outside of our standard offering, please contact Application Engineering (800) 626-2093.

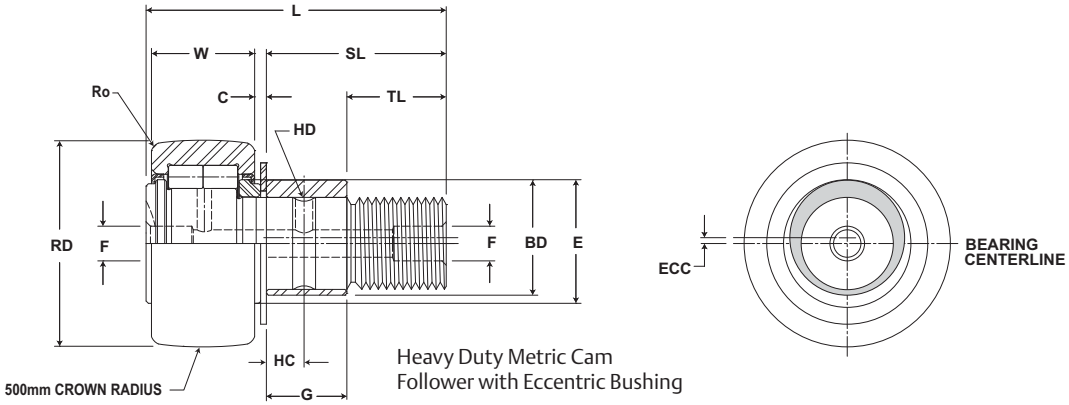

Heavy Duty Metric Cam Follower with Eccentric Bushing

MCFD, MCFDE

Part No.	HC	HD	D	E	Ro	HBD	sdt	Thread Type	CT	LSD	WT
With Shields	Hole Center	Radial Lub. Hole Diameter	Lub. Hole Dia. / Lub. Fitting	Min. Clamping Diameter	Outer Radius (suffix X)	Housing Bore Diameter		Thread Type	Clamping Torque	Limiting Speed (Grease)	Bearing Weight
	mm inch		mm inch		mm inch				Nm in-lb	RPM	kg lb
	(Ref)	(Ref)	(Ref)	(Ref)	(Ref)	Nom.	Tol.				
MCFD 72	12.00 .472	4.00 .157	8.00 .315	44.00 1.732	2.00 .079	24.000 .9449	+0/-.021 +0/-.0008	M24x1.5	216 1,912	2,100	1.01 2.23
MCFDE 72											
MCFD 72 X											
MCFDE 72 X											
MCFD 80	15.00 .591	4.00 .157	8.00 .315	47.00 1.850	2.00 .079	30.000 1.1811	+0/-.021 +0/-.0008	M30x1.5	441 3,903	1,800	1.54 3.39
MCFDE 80											
MCFD 80 X											
MCFDE 80 X											
MCFD 90	15.00 .591	4.00 .157	8.00 .315	47.00 1.850	2.00 .079	30.000 1.1811	+0/-.021 +0/-.0008	M30x1.5	441 3,903	1,800	1.96 4.32
MCFDE 90											
MCFD 90 X											
MCFDE 90 X											

McGILL® Heavy Duty CAMROL Bearings

Basic Construction Type: Yoke Type Crowned / Cylindrical Outside Diameter

Rolling Elements: Full Complement Cylindrical Roller

Bearing Material: Bearing Quality Steel

Seal Type: Metallic Shield

Lubrication: Lithium Soap Grease NLGI #2

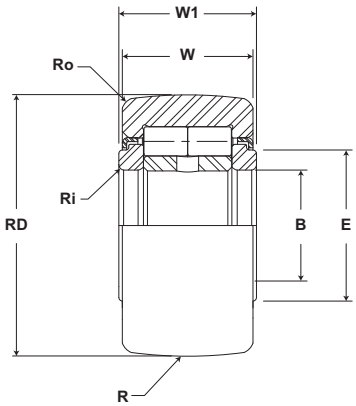

MCYRD

Part No.	RD		W		B		W1		R	Track Roller Dynamic Rating	Track Roller Static Rating
With Shields	Roller Diameter		Roller Width		Bore Diameter		Overall Width		Cylindrical Suffix MCF-X		
	mm inch		mm inch		mm inch		mm inch		mm inch	N/lb	N/lb
	Nom.	Tol.	Nom.	Tol.	Nom	Tol	Nom	Tol	Radius		
MCYRD 15	35.000 1.3780	+0/-.050 +0/-.002	18.00 .709	+0/.12 +0/-.005	15.000 .5906	+0/-.008 +0/-.0003	19.00 .748	+0/-0.21 +0/-0.0008	500 20	16,000 3,597	18,000 4,047
MCYRD 15 X		+0/-0.011 +0/- 0.0004							Cylindrical		
MCYRD 17	40.000 1.5748	+0/-.050 +0/-.002	20.00 .787	+0/.12 +0/-.009	17.000 .6693	+0/-.008 +0/-.0003	21.00 .827	+0/-0.21 +0/-0.0008	500 20	18,000 4,047	22,000 4,946
MCYRD 17 X		+0/-0.011 +0/- 0.0004							Cylindrical		
MCYRD 20	47.000 1.8504	+0/-.050 +0/-.002	24.00 .945	+0/.12 +0/-.013	20.000 .7874	+0/-.010 +0/-.0004	25.00 .984	+0/-0.21 +0/-0.0008	500 20	27,000 6,070	32,000 7,194
MCYRD 20 X		+0/-0.011 +0/- 0.0004							Cylindrical		
MCYRD 25	52.000 2.0472	+0/-.050 +0/-.002	24.00 .945	+0/.12 +0/-.017	25.000 .9843	+0/-.010 +0/-.0004	25.00 .984	+0/-0.21 +0/-0.0008	500 20	30,000 6,745	35,000 7,869
MCYRD 25 X		+0/-0.013 +0/- 0.0005							Cylindrical		
MCYRD 30	62.000 2.4409	+0/-.050 +0/-.002	28.00 1.102	+0/.12 +0/-.021	30.000 1.1811	+0/-.010 +0/-.0004	29.00 1.142	+0/-0.21 +0/-0.0008	500 20	41,000 9,218	47,000 10,567
MCYRD 30 X		+0/-0.013 +0/- 0.0005							Cylindrical		
MCYRD 35	72.000 2.8346	+0/-.050 +0/-.002	28.00 1.102	+0/.12 +0/-.025	35.000 1.3780	+0/-.012 +0/-.0005	29.00 1.142	+0/-0.21 +0/-0.0008	500 20	46,000 10,342	57,000 12,815
MCYRD 35 X		+0/-0.013 +0/- 0.0005							Cylindrical		
MCYRD 40	80.000 3.1496	+0/-.050 +0/-.002	30.00 1.181	+0/.12 +0/-.029	40.000 1.5748	+0/-.012 +0/-.0005	32.00 1.260	+0/-0.25 +0/-0.009	500 20	64,000 14,388	71,000 15,962
MCYRD 40 X		+0/-0.015 +0/- 0.0006							Cylindrical		
MCYRD 45	85.000 3.3465	+0/-.050 +0/-.002	30.00 1.181	+0/.12 +0/-.033	45.000 1.7717	+0/-.012 +0/-.0005	32.00 1.260	+0/-0.25 +0/-0.009	500 20	67,000 15,063	72,000 16,187
MCYRD 45 X		+0/-0.015 +0/- 0.0006							Cylindrical		
MCYRD 50	90.000 3.5433	+0/-.050 +0/-.002	30.00 1.181	+0/.12 +0/-.037	50.000 1.9685	+0/-.012 +0/-.0005	32.00 1.260	+0/-0.25 +0/-0.009	500 20	71,000 15,962	77,000 17,311
MCYRD 50 X		+0/-0.015 +0/- 0.0006							Cylindrical		

1. Standard bearing has a crowned roller outside diameter. For straight cylindrical outside roller diameter, add suffix "X". Example - MCYRD-15-X.
2. Since load, lubrication method, temperature and other factors affect the maximum operating speed, it is impossible to determine precise limiting speed. The listed limiting speeds are based on lightly loaded bearings having adequate lubrication and are listed only as a design guide. If grease lubricated, frequent relubrication is required. Actual bearing testing in the specific application should be conducted if the anticipated operating speed approaches the listed limiting speed.
3. Positive clamping across endplates required to ensure proper end play after mounting.

Metric dimensions for reference only.
Not all parts are available from stock. Please contact customer service for availability (800) 626-2120.
For more information on bearing capabilities outside of our standard offering, please contact Application Engineering (800) 626-2093.

MCYRD

E	Ro	Ri	LF	LFT	TF	TFT	LSD	WT
Min. Clamping Diameter	Outer Corner Radius	Inner Corner Radius	Recommended Shaft Diameters				Limiting Speed (Grease)	Bearing Weight
			Loose Fit		Light Fit			
mm inch		mm inch	mm inch		mm inch		RPM	kg lb
(Ref)	(Ref)	(Ref)	Nom	Tol	Nom	Tol		
20.00 .787	.60 .024	.30 .012	14.994 .5903	+0/-.011 +0/-.0004	15.000 .5906	+0/-.011 +0/-.0004	6,500	.10 .22
22.00 .866	1.00 .039	.30 .012	16.994 .6691	+0/-.011 +0/-.0004	17.000 .6693	+0/-.011 +0/-.0004	5,500	.15 .32
27.00 1.063	1.00 .039	.30 .012	19.993 .7871	+0/-.013 +0/-.0005	20.000 .7874	+0/-.013 +0/-.0005	4,200	.25 .54
31.00 1.220	1.00 .039	.30 .012	24.993 .9840	+0/-.013 +0/-.0005	25.000 .9843	+0/-.013 +0/-.0005	3,400	.28 .62
38.00 1.496	1.00 .039	.30 .012	29.993 1.1808	+0/-.013 +0/-.0005	30.000 1.1811	+0/-.013 +0/-.0005	2,600	.46 1.02
44.00 1.732	1.10 .043	.60 .024	34.991 1.3776	+0/-.016 +0/-.0006	35.000 1.3780	+0/-.016 +0/-.0006	2,100	.63 1.39
51.00 2.008	1.10 .043	.60 .024	39.991 1.5744	+0/-.016 +0/-.0006	40.000 1.5748	+0/-.016 +0/-.0006	1,600	.82 1.80
55.00 2.165	1.10 .043	.60 .024	44.991 1.7713	+0/-.016 +0/-.0006	45.000 1.7717	+0/-.016 +0/-.0006	1,400	.89 1.95
60.00 2.362	1.10 .043	.60 .024	45.991 1.8107	+0/-.016 +0/-.0006	50.000 1.9685	+0/-.016 +0/-.0006	1,300	.95 2.09

McGill Special Duty Cam Followers

Special-Duty CAMROL bearings are available feature black oxide treated bearing steel in both inch and metric sizes for your motion control needs. Designed for severe applications, bearings thick section outer race, together with a caged (retainer) needle roller set provides the basic foundation for a cam follower suited for severe duty. Integral flange construction, on stud version bearings help maintain bearing integrity throughout the service life. A metallic face plug seal provides a wear resistant seal while the heavy duty seal provides a barrier for contaminate entry to support reduced maintenance applications. Within the following section you can learn more about these feature and how the can be applied to your tough application.

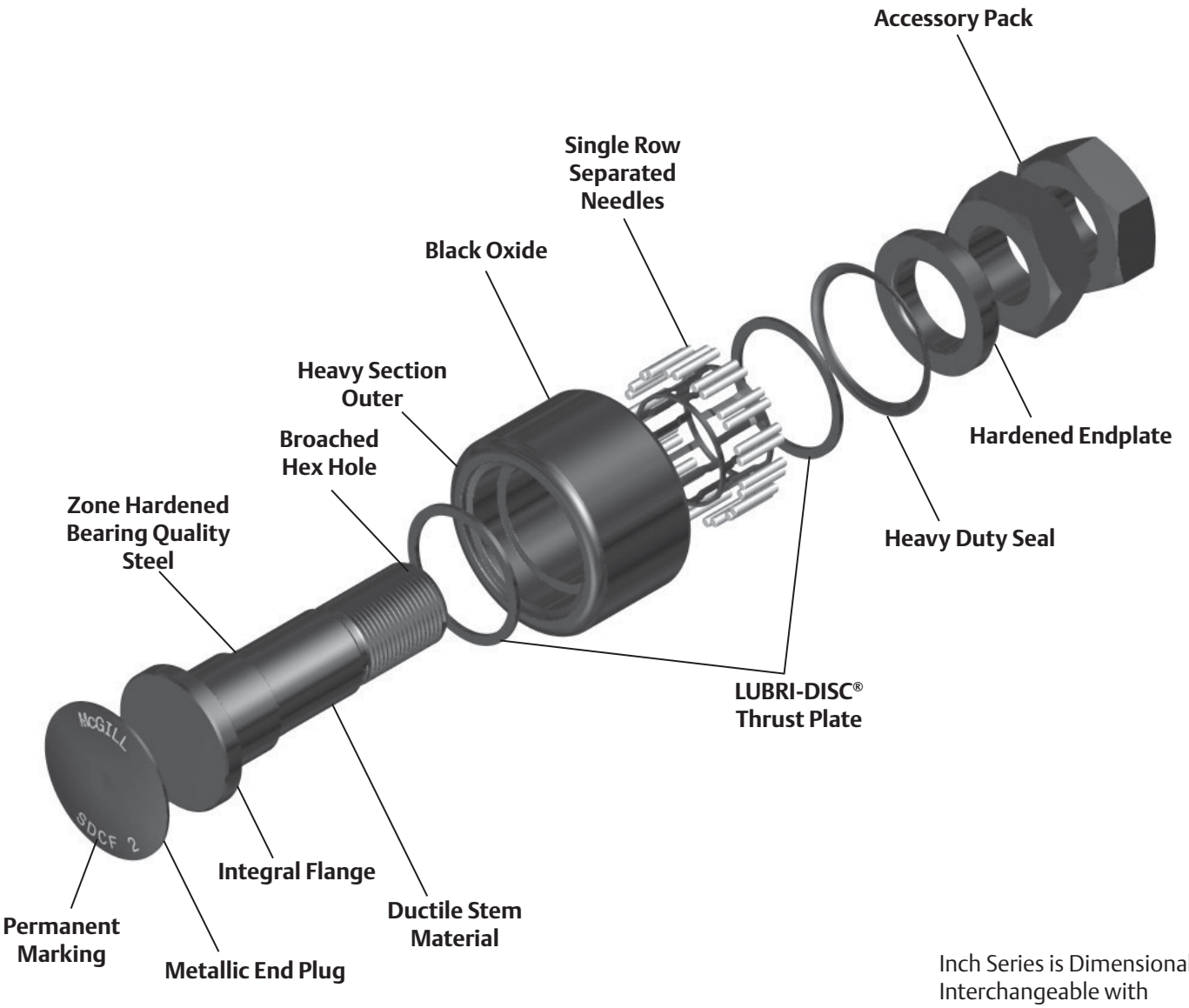

Inch Series is Dimensionally Interchangeable with Standard INCH CAMROL Factory Filled Synthetic Grease.

Special Duty Cam Follower Nomenclature

Series Identifier
SD - Special Duty

Basic Type
CF - Cam Follower
MCF - Metric Cam Follower

Optional Prefix
E - Eccentric Bushing

Size
CF - O.D. In Inches
MCF - O.D. In mm

SD CF E - 1 1/2

Features and Benefits

Retainer Type

The retainer (cage) option provides heat-treated steel cage for improved durability and wear resistance. The needle separation produces larger lubrication reservoir and helps achieve higher bearing speeds. The cages are designed with two rollers per pockets to help improve static and dynamic load ratings.

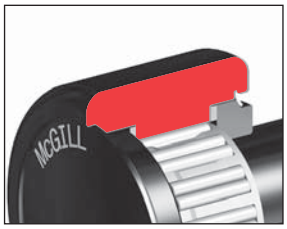

Heavy Section Outer

The heavy section outer helps support radial loading and provide proper rolling element support.

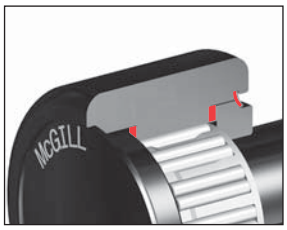

LUBRI-DISC® Seal

The CAMROL standard for seals, the LUBRI-DISC seal helps keep contaminants out and lubrication in the bearing, with an integral back plate to separate the metal to metal contact between the outer ring and endplate(s) or flange. The back plate feature reduces friction resulting in lower operating temperatures which can extend grease life and allowing for higher operating speeds. The seal also includes vents to help prevent seal blowout during relubrication, while the outer raceway is machined with a reservoir for additional lubricant capacity. The LUBRI-DISC seal option has a good balance of sealing, lubricant capacity, and low drag operation essential to a precision cam follower suited for most industrial applications.

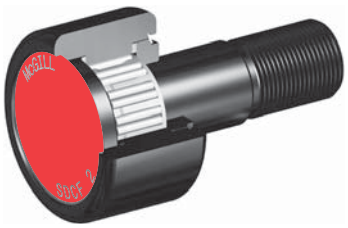

End Plug Seal

Metallic Plug seal helps keep contamination out of the bearing and resistant to weld spatter, abrasive contaminants and washout. The plug installed into the outer encapsulates the flange side of the bearing resulting in a large grease reservoir and wear resistant bearing seal.

Cylindrical Outside Diameter (OD)

The cylindrical OD can improve performance in certain applications such as improved track capacity by maximizing the contact area with the track.

Features and Benefits continued

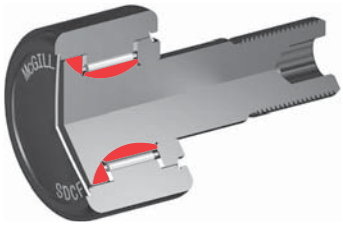

Zone Hardened Raceways

Heat treatment used to precisely harden working surfaces of the raceway and flange. The hardened surfaces provide support for the rolling element contact stresses, while keeping the core of the inner ductile to help absorb shock loads.

Hex Hole (Broached)

The hex hole can aide in the installation and removal of stud type cam followers by increasing the holding power over a standard screw driver or milled slot.

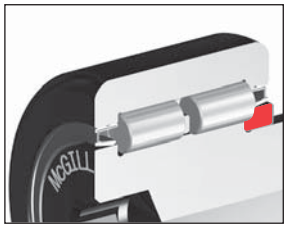

Hardened Endplate

Similar to the flange, the endplate must provide a seal surface for the LUBRI-DISC seal and resist wear from incidental contact with the outer or rollers. The hardened and ground endplate provides a sealing surface with LUBRI-DISC® seal option.

McGILL® Special Duty CAMROL Bearings

Features and Benefits

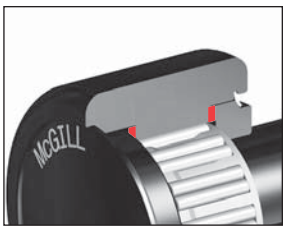

LUBRI-DISC® Thrust Washer

Utilizing the LUBRI-DISC properties as a back plate to separate the metal to metal contact between the outer ring and endplate(s) or flange. The back plate feature reduces friction resulting in lower operating temperatures which can extend grease life and allowing for higher operating speeds.

Factory Grease Fill

The cam follower and cam yoke roller bearings are factory lubricated with synthetic grease. Contact Application Engineering when application conditions require special lubricants

Black Oxide Finish

Bearings have a black oxide finish on all external surfaces.

Permanent Marking

Part number permanently marked on bearing face, helps bearing identification after years of service.

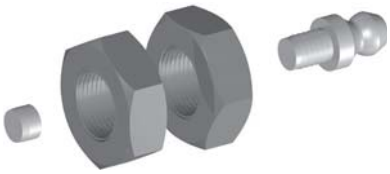

Installation Accessory Pack

All McGill stud type special duty Cam followers include (2) jam nuts to ensure proper thread type (Metric/ Inch), grease fitting and oil hole plug to help provide proper lubrication path to the rolling elements and prevent contamination from entering the bearing through a unused oil hole.

Options

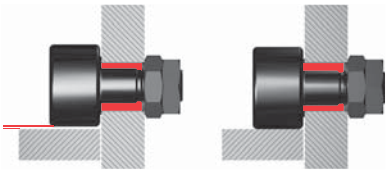

Eccentric Stud

Eccentric stud option provides a means of adjusting the radial position of the bearing which can improve the load sharing of inline bearing combinations. Cam follower load sharing helps reduce operation costs by reducing premature failures due to overloaded bearings, the need of precise mounting hole location tolerances and providing ability to realign bearing due to track wear.

Custom Capabilities

- *Customer specified factory grease fill*
- *Stud or thread length modifications*
- *Roller diameter variations or tolerances*
- *Cam followers grouped or matched diameter tolerance / run out sets*
- *Custom engineered to order designs*

McGILL® Special Duty CAMROL Bearings

Basic Construction Type: Stud Type Crowned / Cylindrical Outside Diameter

Rolling Elements: Retained (Caged) Needle Roller

Bearing Material: Bearing Quality Steel

Seal Type: Metal Extension Plug and LUBRI-DISC® Seal

Lubrication: Synthetic Grease NLGI #2

System Configuration: Concentric / Eccentric

Mounting Feature: Hex Hole on Thread Face

Dimensional Interchange: Standard CAMROL Bearing

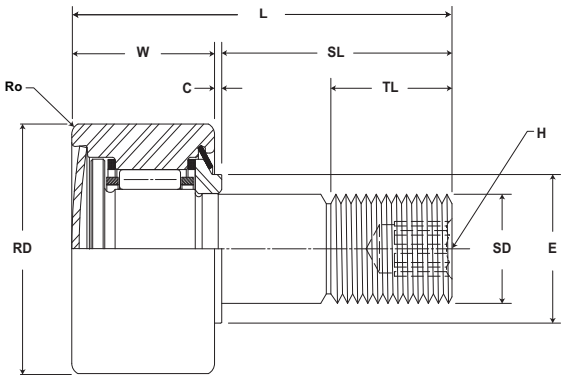

SDCF

Part No.	RD		W		SD		SL	C	TL	L	Track Roller Dynamic Rating	Track Roller Static Rating
With LUBRI-DISC Seals	Roller Diameter		Roller Width		Stud Diameter		Stud Length	Endplate Extension	Minimum Thread Length	Length Overall		
	inch mm		inch mm		inch mm		inch mm		inch mm		lb/N	lb/N
	Nom.	Tol.	Nom.	Tol.	Nom.	Tol.	(Ref)	(Ref)	(Ref)	(Ref)		
SDCF 1	1.000 25.40	+0 / -0.001 +0 / - 0.03	.6250 15.875	+0 / -0.010 +0 / - 0.25	.4375 11.113	+0.001 /-0 +0.03 / - 0	1.00 25.4	.03 .8	.50 12.7	1.09 27.8	1,280 5,693	1,450 6,450
SDCF 1 1/4	1.250 31.75	+0 / -0.001 +0 / - 0.03	.7500 19.050	+0 / -0.010 +0 / - 0.25	.5000 12.700	+0.001 /-0 +0.03 / - 0	1.25 31.8	.03 .8	.63 15.9	1.28 32.5	1,630 7,250	2,050 9,118
SDCF 1 1/2	1.500 38.10	+0 / -0.001 +0 / - 0.03	.8750 22.225	+0 / -0.010 +0 / - 0.25	.6250 15.875	+0.001 /-0 +0.03 / - 0	1.50 38.1	.03 .8	.75 19.1	1.53 38.9	2,450 10,898	3,570 15,879
SDCF 1 3/4	1.750 44.45	+0 / -0.001 +0 / - 0.03	1.0000 25.400	+0 / -0.010 +0 / - 0.25	.7500 19.050	+0.001 /-0 +0.03 / - 0	1.75 44.5	.03 .8	.88 22.2	1.78 45.2	3,000 13,344	4,450 19,794
SDCF 2	2.000 50.80	+0 / -0.001 +0 / - 0.03	1.2500 31.750	+0 / -0.010 +0 / - 0.25	.8750 22.225	+0.001 /-0 +0.03 / - 0	2.00 50.8	.03 .8	2.00 50.8	2.16 54.8	4,000 17,792	6,700 29,802
SDCF 2 1/2	2.500 63.50	+0 / -0.001 +0 / - 0.03	1.5000 38.100	+0 / -0.010 +0 / - 0.25	1.0000 25.400	+0.001 /-0 +0.03 / - 0	2.25 57.2	.03 .8	2.25 57.2	2.53 64.3	5,930 26,377	10,400 46,259
SDCF 3	3.000 76.20	+0 / -0.001 +0 / - 0.03	1.7500 44.450	+0 / -0.010 +0 / - 0.25	1.2500 31.750	+0.001 /-0 +0.03 / - 0	2.50 63.5	.03 .8	2.50 63.5	3.03 77.0	10,500 46,704	19,700 87,626
SDCF 4	4.000 101.60	+0 / -0.001 +0 / - 0.03	2.2500 57.150	+0 / -0.010 +0 / - 0.25	1.5000 38.100	+0.001 /-0 +0.03 / - 0	3.50 88.9	.03 .8	3.50 88.9	3.78 96.0	12,700 56,490	23,200 103,194

Clamping torque is based on dry threads. If threads are lubricated, use half of value shown.

Metric dimensions for reference only.
Not all parts are available from stock. Please contact customer service for availability (800) 626-2120.
For more information on bearing capabilities outside of our standard offering, please contact Application Engineering (800) 626-2093.

SDCF

Part No.	H	E	Ro	Housing Bore Diameter		Thread Type	Clamping Torque	Limiting Speed	WT
With LUBRI-DISC Seals	Hex Hole	Min. Clamping Diameter	Outer Corner Radius						Bearing Weight
	inch mm		inch mm	inch mm			in-lb	RPM	lb kg
	(Ref)	(Ref)	(Ref)	Nom.	Tol.				
SDCF 1	.25 6.4	.59 15.1	.03 .8	.44 11.1	+.0002/-.0003 +.0005/-.0008	7/16-20	250 28	12,500	.16 .07
SDCF 1 1/4	.25 6.4	.83 21.0	.03 .8	.50 12.7	+.0002/-.0003 +.0005/-.0008	1/2-20	350 40	8,100	.29 .13
SDCF 1 1/2	.31 7.9	.95 24.2	.06 1.6	.63 15.9	+.0002/-.0003 +.0005/-.0008	5/8-18	650 73	6,300	.49 .22
SDCF 1 3/4	.31 7.9	1.11 28.2	.06 1.6	.75 19.1	+.0002/-.0003 +.0005/-.0008	3/4-16	1,250 141	5,000	.80 .36
SDCF 2	.44 11.1	1.28 32.5	.09 2.4	.88 22.2	+.0002/-.0003 +.0005/-.0008	7/8-14	1,500 170	3,900	1.30 .59
SDCF 2 1/2	.50 12.7	1.56 39.7	.09 2.4	.00 25.4	+.0002/-.0003 +.0005/-.0008	1-14	2,250 254	3,100	2.33 1.06
SDCF 3	.75 19.1	2.14 54.4	.13 3.2	.25 31.8	+.0002/-.0003 +.0005/-.0008	1 1/4-12	3,450 390	2,200	3.87 1.76
SDCF 4	.75 19.1	2.63 66.7	.13 3.2	.50 38.1	+.0002/-.0003 +.0005/-.0008	1 1/2-12	5,000 565	1,900	8.89 4.03

McGILL® Special Duty CAMROL Bearings

Basic Construction Type: Stud Type Crowned / Cylindrical Outside Diameter

Rolling Elements: Retained (Caged) Needle Roller

Bearing Material: Bearing Quality Steel

Seal Type: Metal Extension Plug and Rubber Lip Seal

Lubrication: Synthetic Grease NLGI #2

System Configuration: Concentric / Eccentric

Mounting Feature: Hex Hole on Thread Face

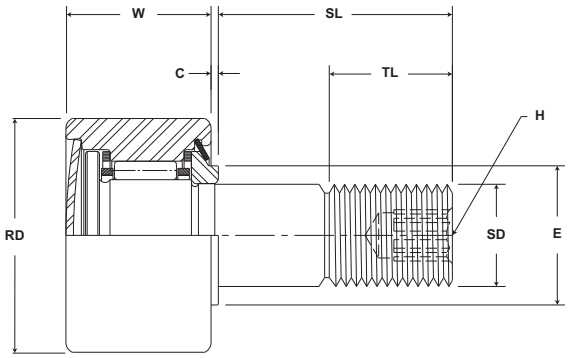

SDMCF

Part No.	RD		W		SD		SL	C	TL	L	R	ECC	G	BD	Track Roller Dynamic Rating	Track Roller Static Rating
With LUBRI-DISC Seals	Roller Diameter		Roller Width		Stud Diameter		Stud Length	Endplate Extension	Minimum Thread Length	Length Overall	Cylindrical Prefix SDCF-XX	Eccentric Base Modifier SDCFE-XX				
	mm inch		mm inch		mm inch		mm inch		mm inch		mm inch	mm inch			N/lb	N/lb
	Nom.	Tol.	Nom.	Tol.	Nom.	Tol.	(Ref)	(Ref)	(Ref)	(Ref)	Radius	(Ref)	+0/-.001 (+0/-.03)	± .001 (± .03)		
SDMCF 25	25.00 .984	+0 / -0.02 +0 / - 0.001	16.00 .630	+0 / -0.25 +0 / - 0.010	10.00 .394	+0 / -0.02 +0 / - 0.001	25 .98	.8 .03	14 .55	27 1.1	500 20	N/A	N/A	N/A	5,690 1,279	6,450 1,450
SDMCFE 25											500 20	.5 .02	10 .39	13 .51		
SDMCF 40	40.00 1.575	+0 / -0.02 +0 / - 0.001	25.00 .984	+0 / -0.25 +0 / - 0.010	16.00 .630	+0 / -0.02 +0 / - 0.001	30 1.18	.8 .03	17 .67	42 1.6	500 20	N/A	N/A	N/A	10,890 2,448	15,900 3,575
SDMCFE 40											500 20	.5 .02	14 .55	20 .79		
SDMCF 50	50.00 1.969	+0 / -0.02 +0 / - 0.001	30.00 1.181	+0 / -0.25 +0 / - 0.010	20.00 .787	+0 / -0.02 +0 / - 0.001	40 1.57	.8 .03	22 .87	51 2.0	500 20	N/A	N/A	N/A	17,750 3,991	29,800 6,700
SDMCFE 50											500 20	1 .04	18 .71	24 .94		
SDMCF 60	60.00 2.362	+0 / -0.02 +0 / - 0.001	35.00 1.378	+0 / -0.25 +0 / - 0.010	24.00 .945	+0 / -0.02 +0 / - 0.001	50 1.97	.8 .03	27 1.06	60 2.4	500 20	N/A	N/A	N/A	26,380 5,931	46,300 10,409
SDMCFE 60											500 20	1 .04	22 .87	28 .10		
SDMCF 80	80.00 3.150	+0 / -0.02 +0 / - 0.001	45.00 1.772	+0 / -0.25 +0 / - 0.010	30.00 1.181	+0 / -0.02 +0 / - 0.001	60 2.36	.8 .03	32 1.26	76 3.0	500 20	N/A	N/A	N/A	4,680 1,052	87,600 19,694
SDMCFE 80											500 20	.5 .06	29 .14	35 .38		
SDMCF 100	100.00 3.937	+0 / -0.02 +0 / - 0.001	50.00 1.969	+0 / -0.25 +0 / - 0.010	36.00 1.417	+0 / -0.02 +0 / - 0.001	80 3.15	.8 .03	42 1.65	87 3.4	800 31	N/A	N/A	N/A	56,500 12,702	103,200 23,201

Clamping torque is based on dry threads. If threads are lubricated, use half of value shown.

Metric dimensions for reference only.
Not all parts are available from stock. Please contact customer service for availability (800) 626-2120.
For more information on bearing capabilities outside of our standard offering, please contact Application Engineering (800) 626-2093.

SDMCF

Part No.	H Hex Hole mm inch (Ref)	E Min. Clamping Diameter mm inch (Ref)	Ro Outer Corner Radius mm inch (Ref)	Housing Bore Diameter mm inch Nom.	Housing Bore Diameter mm inch Tol.	Thread Type	Clamping Torque Nm in-lb	WT Bearing Weight kg lb
SDMCF 25	5 .20	15.1 .59	1 .04	10.00 .394	+.025/-.000 +.001/-.000	M10x1.25	57 6	.06 .14
SDMCFE 25								
SDMCF 40	8 .31	24.1 .95	1 .04	16.00 .630	+.025/-.000 +.001/-.004	M16x1.5	85 10	.26 .57
SDMCFE 40								
SDMCF 50	10 .39	32.5 1.28	1 .04	20.00 .787	+.025/-.000 +.001/-.008	M20x1.5	85 10	.50 1.10
SDMCFE 50								
SDMCF 60	12 .47	39.6 1.56	1 .04	24.00 .945	+.025/-.000 +.001/-.012	M24x2	118 13	.85 1.86
SDMCFE 60								
SDMCF 80	14 .55	54.2 2.13	2 .08	30.00 .181	+.025/-.000 +.001/-.016	M30x2	118 13	1.89 4.16
SDMCFE 80								
SDMCF 100	17 .67	66.5 2.62	2 .08	36.00 .417	+.025/-.000 +.001/-.020	M36x3	118 13	3.36 7.40

McGill TRAKROL Followers

TRAKROL bearings feature black oxide treated bearing steel and utilize either a precision ball or tapered roller bearing insert for longer operating life under combination radial and thrust loads. The capacity for combination loads allow the TRAKROL bearing to be available in plain (cylindrical), V-groove, and flanged O.D. in both stud and yoke styles. Small sizes (<3" OD or point diameter) use sealed ball bearing inserts along with a NYLAPLATE seal for additional protection. Stud type configurations utilize a metal end plug seal on the roller face providing a long lasting seal. Both bearing types provide a large internal grease reservoir along with special sealing makes TRAKROL bearings an excellent choice where reduced maintenance is required.

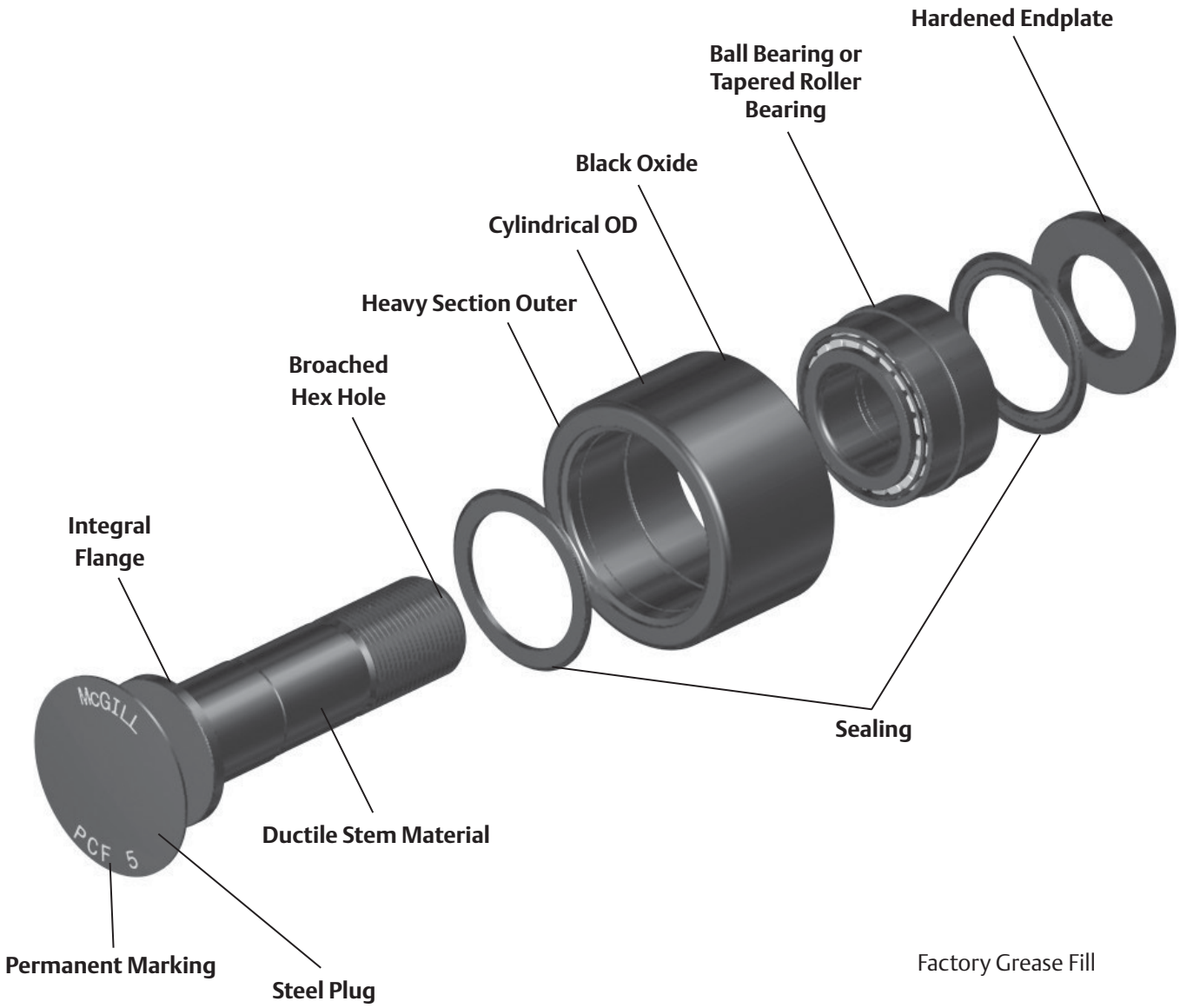

Factory Grease Fill

TRAKROL Nomenclature

Series Identifier
- P – Plain O.D. Profile
- V – V-Groove O.D. Profile
- F – Flange O.D. Profile

Basic Type
- CF - Cam Follower
- CYR - Cam Yoke Roller

Optional Prefix
- E - Eccentric Bushing

Size
- O.D. - In Inches (Point Diameter for V-Type)

P CF E - 3

Features and Benefits

Configurations

TRAKROL® bearings feature precision ball bearings or tapered roller bearings to help provide longer life when subjected to a combination of radial and thrust loads.

Plain Series

Plain OD bearings are generally used to support radial loads. Can also act as a "float" bearing when used in conjunction with a flange or V-Groove type.

Flanged Series

Flanged OD bearings are popular in guide rail applications since integral flange help direct the load axially.

V-Groove Series

Typically used with "V" shaped tracks for both guidance and radial support. The configuration of the track reduces the amount of sediment build-up on the track.

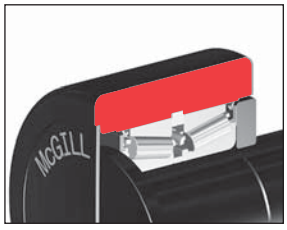

Heavy Section Outer

The heavy section outer helps support radial loading and provide proper rolling element support.

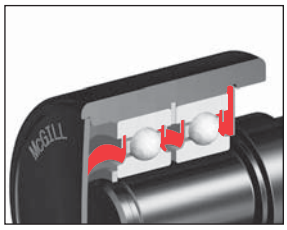

Sealing

All TRAKROL bearing utilize rubber lip seals to help improve sealing and grease retention. TRAKROL bearings under 3" feature a ball bearing insert along with a NYLAPLATE wiping seal for addition protection. The NYLAPLATE seal is exclusive to McGill TRAKROL bearings and complements the rubber lip seal provided with the bearing insert.

Features and Benefits continued

Steel Plug

Metallic Plug seal helps keep continuation out the bearing and is resistant to weld spatter, abrasive contaminants and washout.

Cylindrical Outside Diameter (OD)

The cylindrical OD can improve performance in certain applications such as improved track capacity by maximizing the contact area with the track.

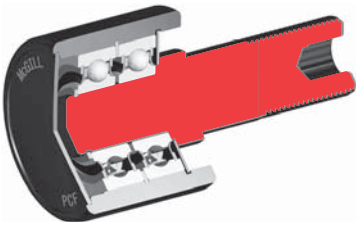

Ductile Material

Ductile stem helps resist shock loads.

Factory Grease Fill

The bearings are factory lubricated with medium temperature grease. Contact Application Engineering when application conditions require special lubricants.

Black Oxide Finish

Bearings have a black oxide finish on all external surfaces.

Permanent Marking

Part number permanently marked on bearing face, helps bearing identification after years of service.

McGILL® TRAKROL Cam Follower Bearings

Basic Construction Type: Stud Type Cylindrical Outside Diameter

Rolling Elements: Ball or Tapered Roller Bearing Insert

Bearing Material: Bearing Quality Steel

Seal Type: Metal Extension Plug and Rubber Lip Seal. Ball Bearing has Additional NYLAPLATE Seal

Lubrication: Polyurea Thickened Grease NLGI #2

Stem Configuration: Concentric / Eccentric

Mounting Feature: Hex Hole on Thread Face

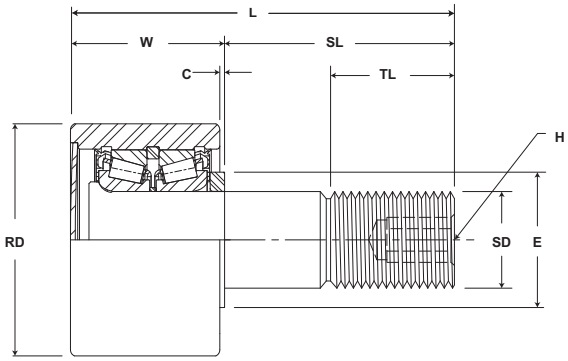

PCF

Part No.	Insert Type	RD	W	SD		SL	C	TL	L	Track Roller Dynamic Rating	Track Roller Dynamic Thrust Rating*	Track Roller Static Rating
With LUBRI-DISC Seals	Ball or Tapered Roller Bearing	Roller Diameter	Roller Width	Stud Diameter		Stud Length	Endplate Extension	Thread Length	Length Overall			
		inch mm		inch mm		inch mm		inch mm		lb/N	lb/N	lb/N
		(Ref)	(Ref)	Nom	Tol	(Ref)	(Ref)	Min	(Ref)			
PCF 1 1/2	BB	1.50 38.1	1.19 30.2	.625 15.9	+0 / -0.001 +0 / - 0.03	1.500 38.10	.06 1.6	.75 19.1	2.69 68.3	2,520 11,209	1,320 5,871	1,370 6,094
PCFE 1 1/2												
PCF 1 3/4	BB	1.75 44.5	1.19 30.2	.750 19.1	+0 / -0.001 +0 / - 0.03	1.750 44.45	.06 1.6	.88 22.2	2.94 74.6	2,520 11,209	1,320 5,871	1,370 6,094
PCFE 1 3/4												
PCF 2	BB	2.00 50.8	1.69 42.9	.875 22.2	+0 / -0.001 +0 / - 0.03	2.000 50.80	.06 1.6	1.13 28.6	3.69 93.7	3,490 15,524	1,830 8,140	2,000 8,896
PCFE 2												
PCF 2 1/4	BB	2.25 57.2	1.69 42.9	.875 22.2	+0 / -0.001 +0 / - 0.03	2.000 50.80	.06 1.6	1.13 28.6	3.69 93.7	3,490 15,524	1,830 8,140	2,000 8,896
PCFE 2 1/4												
PCF 2 1/2	BB	2.50 63.5	1.69 42.9	1.00 25.4	+0 / -0.001 +0 / - 0.03	2.250 57.15	.06 1.6	1.50 38.1	3.94 100.0	5,120 22,774	2,680 11,921	3,120 13,878
PCFE 2 1/2												
PCF 3	TRB	3.00 76.2	2.00 50.8	1.25 31.8	+0 / -0.001 +0 / - 0.03	2.500 63.50	.06 1.6	1.75 44.5	4.50 114.3	14,300 63,606	5,790 25,754	16,000 71,168
PCFE 3												
PCF 3 1/4	TRB	3.25 82.6	2.00 50.8	1.25 31.8	+0 / -0.001 +0 / - 0.03	2.500 63.50	.06 1.6	1.75 44.5	4.50 114.3	14,300 63,606	5,790 25,754	16,000 71,168
PCFE 3 1/4												
PCF 3 1/2	TRB	3.50 88.9	2.00 50.8	1.25 31.8	+0 / -0.001 +0 / - 0.03	2.750 69.85	.06 1.6	1.75 44.5	4.75 120.7	14,300 63,606	5,790 25,754	16,000 71,168
PCFE 3 1/2												
PCF 4	TRB	4.00 101.6	2.00 50.8	1.25 31.8	+0 / -0.001 +0 / - 0.03	2.750 69.85	.06 1.6	1.75 44.5	4.75 120.7	14,300 63,606	5,790 25,754	16,000 71,168
PCFE 4												
PCF 4 1/2	TRB	4.50 114.3	2.00 50.8	1.25 31.8	+0 / -0.001 +0 / - 0.03	2.750 69.85	.06 1.6	1.75 44.5	4.75 120.7	14,300 63,606	5,790 25,754	16,000 71,168
PCF 5												
PCF 6	TRB	6.00 152.4	3.00 76.2	2.50 63.5	+0 / -0.001 +0 / - 0.03	5.500 139.70	.06 1.6	3.25 82.6	8.50 215.9	35,800 159,238	14,200 63,162	62,000 275,776
PCF 7												
PCF 8	TRB	8.00 203.2	3.00 76.2	2.50 63.5	+0 / -0.001 +0 / - 0.03	5.500 139.70	.06 1.6	3.25 82.6	8.50 215.9	35,800 159,238	14,200 63,162	62,000 275,776

*Dynamic thrust load rating based on application of a centric, axial load. Fatigue life calculations for combined radial and thrust loading require special considerations and Application Engineering should be contacted.
Metric dimensions for reference only.
Not all parts are available from stock. Please contact customer service for availability (800) 626-2120.
For more information on bearing capabilities outside of our standard offering, please contact Application Engineering (800) 626-2093.

TRAKROL Cam Follower Bearings

McGILL®

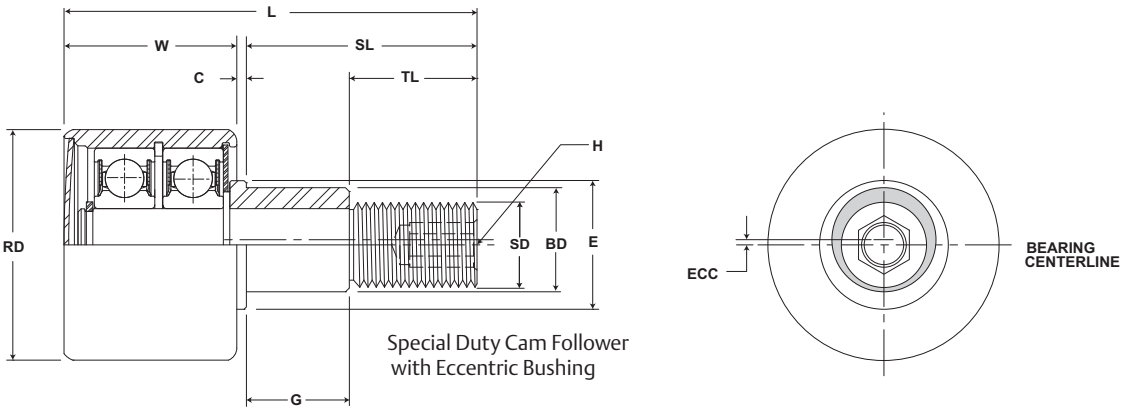

Special Duty Cam Follower with Eccentric Bushing

PCF

Part No.	ECC	G	BD	H	E	Housing Bore Diameter		Thread Type	Clamping Torque	WT
With LUBRI-DISC Seals	Eccentric Base Modifier PCFE-XX			Hex Hole	Min. Clamping Diameter					Bearing Weight
	inch mm			inch mm		inch mm			in-lb Nm	lb kg
	(Ref)	+0/-.010	±.001	(Ref)	(Ref)	Nom.	Tol.			
PCF 1 1/2	-	-	-	.2500 6.350	.75 19.1	.6260 15.900	±.001 ±.025	5/8-18	650 74	.51 .23
PCFE 1 1/2	.03 .8	.73 18.5	.875 22.2		1.13 28.6	.8780 22.301				
PCF 1 3/4	-	-	-	.2500 6.350	1.00 25.4	.7510 19.075	±.001 ±.025	3/4-16	1,250 142	.81 .37
PCFE 1 3/4	.03 .8	.86 21.7	1.000 25.4		1.25 31.8	1.0030 25.476				
PCF 2	-	-	-	.3750 9.525	1.00 25.4	.8760 22.250	±.001 ±.025	7/8-14	1,500 170	1.34 .61
PCFE 2	.03 .8	.98 24.9	1.187 30.1		1.50 38.1	1.1900 30.226				
PCF 2 1/4	-	-	-	.3750 9.525	1.00 25.4	.8760 22.250	±.001 ±.025	7/8-14	1,500 170	1.72 .78
PCFE 2 1/4	.03 .8	.98 24.9	1.187 30.1		1.50 38.1	1.1900 30.226				
PCF 2 1/2	-	-	-	.4375 11.113	1.25 31.8	1.0010 25.425	±.001 ±.025	1-14	2,240 254	2.12 .96
PCFE 2 1/2	.03 .8	.98 24.9	1.187 30.1		1.50 38.1	1.1900 30.226				
PCF 3	-	-	-	.4375 11.113	1.75 44.5	1.2510 31.775	±.001 ±.025	1 1/4-12	3,440 388	3.91 1.77
PCFE 3	.06 1.5	1.23 31.2	1.750 44.5		2.31 58.7	1.7530 44.526				
PCF 3 1/4	-	-	-	.4375 11.113	1.75 44.5	1.2510 31.775	±.001 ±.025	1 1/4-12	3,440 388	4.60 2.08
PCFE 3 1/4	.06 1.5	1.23 31.2	1.750 44.5		2.31 58.7	1.7530 44.526				
PCF 3 1/2	-	-	-	.4375 11.113	1.75 44.5	1.2510 31.775	±.001 ±.025	1 1/4-12	3,440 388	6.25 2.83
PCFE 3 1/2	.06 1.5	1.36 34.4	1.812 46.0		2.31 58.7	1.8150 46.101				
PCF 4	-	-	-	.4375 11.113	1.75 44.5	1.2510 31.775	±.001 ±.025	1 1/4-12	3,440 388	7.94 3.60
PCFE 4	.06 1.5	1.36 34.4	1.812 46.0		2.31 58.7	1.8150 46.101				
PCF 4 1/2	-	-	-	.4375 11.113	1.75 44.5	1.2510 31.775	±.001 ±.025	1 1/4-12	3,440 388	9.88 4.48
PCF 5	-	-	-		3.25 82.6	2.0010 50.825				
PCF 6	-	-	-	.8750 22.225	3.25 82.6	2.5010 63.525	±.001 ±.025	2 1/2-12	5,000 566	30.00 13.61
PCF 7	-	-	-		3.25 82.6	2.5010 63.525				
PCF 8	-	-	-	.8750 22.225	3.25 82.6	2.5010 63.525	±.001 ±.025	2 1/2-12	5,000 566	49.00 22.23

Clamping torque is based on dry threads. If threads are lubricated, use half of value shown.

McGILL® TRAKROL Cam Follower Bearings

Basic Construction Type: Yoke Type Cylindrical Outside Diameter

Rolling Elements: Ball or Tapered Roller Bearing Insert

Bearing Material: Bearing Quality Steel

Seal Type: Rubber Lip

Lubrication: Polyurea Thickened Grease NLGI #2

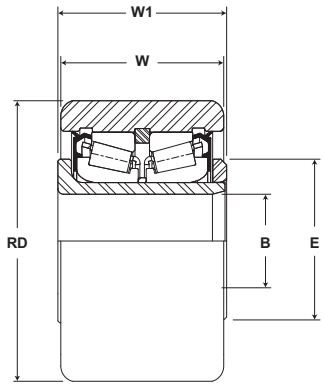

PCYR

Part No.	Insert Type	RD	W	B		W1	E	Track Roller Dynamic Rating	Thrust Capacity	Track Roller Static Rating	WT
With LUBRI-DISC Seals	Ball or Tapered Roller Bearing	Roller Diameter	Roller Width	Bore Diameter		Endplate Extension	Min. Clamping Diameter				Bearing Weight
		inch mm		inch mm		inch mm		lb/N	lb/N	lb/N	lb kg
		(Ref)	(Ref)	Nom.	Tol.	(Ref)	(Ref)				
PCYR 3	TRB	3.00 76.2	1.75 44.5	1.000 25.40	+0.0007 /-0 +0.02 / - 0	1.81 46.0	1.75 44.5	14,300 63,606	5,790 25,754	20,000 88,960	2.57 1.17
PCYR 3 1/2	TRB	3.50 88.9	2.00 50.8	1.125 28.58	+0.0007 /-0 +0.02 / - 0	2.06 52.4	2.00 50.8	14,300 63,606	5,790 25,754	27,200 120,986	4.41 2.00
PCYR 4	TRB	4.00 101.6	2.25 57.2	1.250 31.75	+0.0007 /-0 +0.02 / - 0	2.31 58.7	2.25 57.2	14,300 63,606	5,790 25,754	27,200 120,986	6.57 2.98
PCYR 4 1/2	TRB	4.50 114.3	1.75 44.5	1.000 25.40	+0.0007 /-0 +0.02 / - 0	1.81 46.0	1.75 44.5	14,300 63,606	5,790 25,754	20,000 88,960	9.09 4.12
PCYR 5	TRB	5.00 127.0	3.75 95.3	1.750 44.45	+0.0007 /-0 +0.02 / - 0	2.85 72.3	3.00 76.2	35,800 159,238	13,300 59,158	58,400 259,763	11.61 5.27
PCYR 6	TRB	6.00 152.4	3.25 82.6	2.250 57.15	+0.0007 /-0 +0.02 / - 0	3.38 85.7	3.25 82.6	35,800 159,238	14,200 63,162	58,400 259,763	20.47 9.29

*Dynamic thrust load rating based on application of a centric, axial load. Fatigue life calculations for combined radial and thrust loading require special considerations and Application Engineering should be contacted.

Metric dimensions for reference only.

Not all parts are available from stock. Please contact customer service for availability (800) 626-2120.

For more information on bearing capabilities outside of our standard offering, please contact Application Engineering (800) 626-2093.

Cam Follower Engineering see page B-147.

For more information on bearing capabilities outside of our standard offering, please contact Application Engineering (800) 626-2093.

McGILL® TRAKROL Cam Follower Bearings

Basic Construction Type: Stud Type Flanged Outside Diameter

Rolling Elements: Ball or Tapered Roller Bearing Insert

Bearing Material: Bearing Quality Steel

Seal Type: Metal Extension Plug and Rubber Lip Seal Ball Bearing with Additional NYLAPLATE Seal

Lubrication: Polyurea Thickened Grease NLGI #2

Stem Configuration: Concentric / Eccentric / Heavy Stud

Mounting Feature: Hex Hole on Thread Face

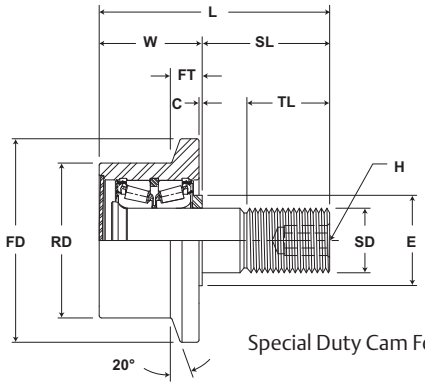

Special Duty Cam Follower

FCF

Part No.	Insert Type	RD	W	FD	FT	SD		SL	C	TL	L	Track Roller Dynamic Rating	Thrust Capacity	Track Roller Static Rating
With LUBRI-DISC Seals	Ball or Tapered Roller Bearing	Roller Diameter	Roller Width	Flange Diameter	Flange Width	Stud Diameter		Stud Length	Endplate Extension	Minimum Thread Length	Length Overall			
		inch mm		inch mm		inch mm		inch mm		inch mm		lb/N	lb/N	lb/N
		(Ref)	(Ref)	(Ref)	(Ref)	Nom	Tol	(Ref)	(Ref)	(Ref)	(Ref)			
FCF 1 1/2 FCFE 1 1/2	BB	1.50 38.1	1.188 30.16	2.19 55.6	.34 8.7	.625 15.9	+0 / -0.001 +0 / - 0.03	1.50 38.1	.06 1.6	.75 19.1	2.69 68.3	2,520 11,209	1,320 5,871	1,370 6,094
FCF 1 3/4 FCFE 1 3/4	BB	1.75 44.5	1.188 30.16	2.44 61.9	.34 8.7	.750 19.1	+0 / -0.001 +0 / - 0.03	1.75 44.5	.06 1.6	.88 22.2	2.94 74.6	2,520 11,209	1,320 5,871	1,370 6,094
FCF 2 1/2 FCFE 2 1/2	BB	2.50 63.5	1.688 42.86	3.19 81.0	.59 15.1	1.00 25.4	+0 / -0.001 +0 / - 0.03	2.25 57.2	.06 1.6	1.50 38.1	3.94 100.0	5,120 22,774	2,680 11,921	3,120 13,878
FCF 2 3/4 FCFE 2 3/4	BB	2.75 69.9	1.688 42.86	3.44 87.3	.59 15.1	1.00 25.4	+0 / -0.001 +0 / - 0.03	2.25 57.2	.06 1.6	1.50 38.1	3.94 100.0	5,120 22,774	2,680 11,921	3,120 13,878
FCF 3 FCFE 3	TRB	3.00 76.2	2.000 50.80	3.94 100.0	.59 15.1	1.25 31.8	+0 / -0.001 +0 / - 0.03	2.50 63.5	.06 1.6	1.75 44.5	4.50 114.3	14,300 63,606	5,790 25,754	16,000 71,168
FCF 3 1/4 FCFE 3 1/4	TRB	3.25 82.6	2.000 50.80	4.19 106.4	.59 15.1	1.25 31.8	+0 / -0.001 +0 / - 0.03	2.50 63.5	.06 1.6	1.75 44.5	4.50 114.3	14,300 63,606	5,790 25,754	16,000 71,168
FCF 3 1/2 FCFE 3 1/2	TRB	3.50 88.9	2.000 50.80	4.44 112.7	.59 15.1	1.25 31.8	+0 / -0.001 +0 / - 0.03	2.75 69.9	.06 1.6	1.75 44.5	4.75 120.7	14,300 63,606	5,790 25,754	16,000 71,168
FCF 4 FCFE 4	TRB	4.00 101.6	2.000 50.80	4.94 125.4	.59 15.1	1.25 31.8	+0 / -0.001 +0 / - 0.03	2.75 69.9	.06 1.6	1.75 44.5	4.75 120.7	14,300 63,606	5,790 25,754	16,000 71,168
FCF 4 1/2	TRB	4.50 114.3	2.000 50.80	5.44 138.1	.59 15.1	1.25 31.8	+0 / -0.001 +0 / - 0.03	2.75 69.9	.06 1.6	1.75 44.5	4.75 120.7	14,300 63,606	5,790 25,754	16,000 71,168
FCF 5	TRB	5.00 127.0	3.000 76.20	5.94 150.8	.72 18.3	1.25 31.8	+0 / -0.001 +0 / - 0.03	4.50 114.3	.06 1.6	2.50 63.5	7.50 190.5	35,800 159,238	13,300 59,158	40,000 177,920
FCF 6	TRB	6.00 152.4	3.000 76.20	6.94 176.2	.72 18.3	2.50 63.5	+0 / -0.001 +0 / - 0.03	5.50 139.7	.06 1.6	3.25 82.6	8.50 215.9	35,800 159,238	14,200 63,162	62,000 275,776
FCF 7	TRB	7.00 177.8	3.000 76.20	7.94 201.6	.72 18.3	2.50 63.5	+0 / -0.001 +0 / - 0.03	5.50 139.7	.06 1.6	3.25 82.6	8.50 215.9	35,800 159,238	14,200 63,162	62,000 275,776
FCF 8	TRB	8.00 203.2	3.000 76.20	8.94 227.0	.72 18.3	2.50 63.5	+0 / -0.001 +0 / - 0.03	5.50 139.7	.06 1.6	3.25 82.6	8.50 215.9	35,800 159,238	14,200 63,162	62,000 275,776

*Dynamic thrust load rating based on application of a centric, axial load. Fatigue life calculations for combined radial and thrust loading require special considerations and Application Engineering should be contacted.

Metric dimensions for reference only.

Not all parts are available from stock. Please contact customer service for availability (800) 626-2120.

For more information on bearing capabilities outside of our standard offering, please contact Application Engineering (800) 626-2093.

TRAKROL Cam Follower Bearings

McGILL®

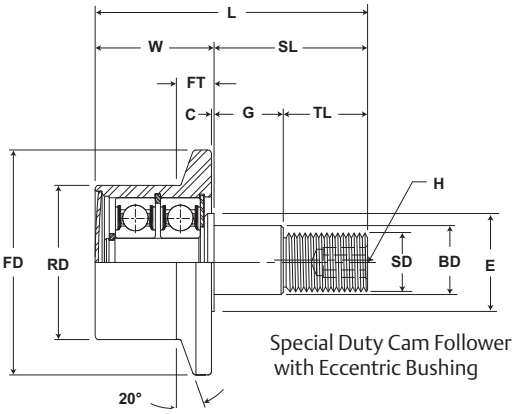

Special Duty Cam Follower with Eccentric Bushing

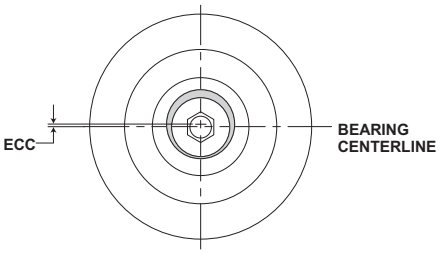

FCF

Part No.	ECC	G	BD	H	E	Housing Bore Diameter		Thread Type	Clamping Torque	WT
With LUBRI-DISC Seals	Eccentric Base Modifier FCFE-XX			Hex Hole	Min. Clamping Diameter					Bearing Weight
	inch mm			inch mm		inch mm		(Ref)	in-lb Nm	lb kg
	(Ref)	+0/-.010	±.001	(Ref)	(Ref)	Nom.	Tol.			
FCF 1 1/2	-	-	-	.25 6.4	.75 19.1	.6260 15.900	±.0002 ±.005	5/8-18	650 74	.63 1.4
FCFE 1 1/2	.03 .8	.730 18.54	.875 22.23			.878 22.30	+.001 +.025			
FCF 1 3/4	-	-	-	.25 6.4	1.00 25.4	.7510 19.075	±.0002 ±.005	3/4-16	1,250 142	1.00 .45
FCFE 1 3/4	.03 .8	0.855 21.72	1.000 25.40			1.003 25.47	+.001 +.025			
FCF 2 1/2	-	-	-	.44 11.1	1.25 31.8	1.0010 25.425	±.0002 ±.005	1-14	2,240 254	2.75 1.25
FCFE 2 1/2	.03 .8	1.105 28.07	1.375 34.93			1.378 35.00	+.001 +.025			
FCF 2 3/4	-	-	-	.44 11.1	1.25 31.8	1.0010 25.425	±.0002 ±.005	1-14	2,240 254	3.25 1.47
FCFE 2 3/4	.03 .8	1.105 28.07	1.375 34.93			1.378 35.00	+.001 +.025			
FCF 3	-	-	-	.44 11.1	1.75 44.5	1.2510 31.775	±.0002 ±.005	1 1/4-12	3,440 388	4.69 2.13
FCFE 3	.06 1.5	1.230 31.24	1.750 44.45			1.753 44.52	+.001 +.025			
FCF 3 1/4	-	-	-	.44 11.1	1.75 44.5	1.2510 31.775	±.0002 ±.005	1 1/4-12	3,440 388	5.42 2.46
FCFE 3 1/4	.06 1.5	1.230 31.24	1.750 44.45			1.753 44.52	+.001 +.025			
FCF 3 1/2	-	-	-	.44 11.1	1.75 44.5	1.2510 31.775	±.0002 ±.005	1 1/4-12	3,440 388	6.25 2.83
FCFE 3 1/2	.06 1.5	1.355 34.42	1.812 46.02			1.815 46.10	+.001 +.025			
FCF 4	-	-	-	.44 11.1	1.75 44.5	1.2510 31.775	±.0002 ±.005	1 1/4-12	3,440 388	7.94 3.60
FCFE 4	.06 1.5	1.355 34.42	1.812 46.02			1.815 46.10	+.001 +.025			
FCF 4 1/2	-	-	-	.44 11.1	1.75 44.5	1.2510 31.775	±.0002 ±.005	1 1/4-12	3,440 388	9.88 4.48
FCF 5	-	-	-	.88 22.2	3.25 82.6	2.0010 50.825	±.0002 ±.005	2-12	5,000 566	18.50 8.39
FCF 6	-	-	-	.88 22.2	3.25 82.6	2.5010 63.525	±.0002 ±.005	2 1/2-12	5,000 566	30.00 13.61
FCF 7	-	-	-	.88 22.2	3.25 82.6	2.5010 63.525	±.0002 ±.005	2 1/2-12	5,000 566	38.00 17.24
FCF 8	-	-	-	.88 22.2	3.25 82.6	2.5010 63.525	±.0002 ±.005	2 1/2-12	5,000 566	49.00 22.23

Clamping torque is based on dry threads. If threads are lubricated, use half of value shown.

McGILL® TRAKROL Cam Follower Bearings

Basic Construction Type: Yoke Type Flanged Outside Diameter

Rolling Elements: Tapered Roller Bearing Insert

Bearing Material: Bearing Quality Steel

Seal Type: Rubber Lip Seal

Lubrication: Polyurea Thickened Grease NLGI #2

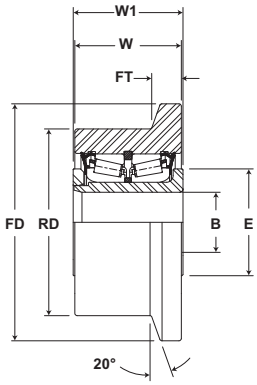

FCYR

Part No.	Insert Type	RD	W	FD	FT	B		W1	E	Track Roller Dynamic Rating	Thrust Capacity	Track Roller Static Rating	WT
With LUBRI-DISC Seals	Ball or Tapered Roller Bearing	Roller Diameter	Roller Width	Flange Diameter	Flange Width	Bore Diameter		Endplate Extension	Min. Clamping Diameter				Bearing Weight
		inch mm		inch mm		inch mm		inch mm		lb/N	lb/N	lb/N	lb kg
		(Ref)	(Ref)	(Ref)	(Ref)	Nom.	Tol.	(Ref)	(Ref)				
FCYR 3	TRB	3.00 76.2	1.75 44.5	3.94 100.0	.59 15.1	1.000 25.40	+0.0007 /-0 +0.02 / - 0	1.81 46.0	1.75 44.5	14,300 63,606	5,790 25,754	20,000 88,960	3.28 1.49
FCYR 3 1/4	TRB	3.25 82.6	1.75 44.5	4.19 106.4	.59 15.1	1.000 25.40	+0.0007 /-0 +0.02 / - 0	1.81 46.0	1.75 44.5	14,300 63,606	5,790 25,754	20,000 88,960	3.93 1.78
FCYR 3 1/2	TRB	3.50 88.9	2.00 50.8	4.44 112.7	.59 15.1	1.125 28.58	+0.0007 /-0 +0.02 / - 0	2.06 52.4	2.00 50.8	14,300 63,606	5,790 25,754	27,200 120,986	4.97 2.25
FCYR 4	TRB	4.00 101.6	2.25 57.2	4.94 125.4	.59 15.1	1.250 31.75	+0.0007 /-0 +0.02 / - 0	2.31 58.7	2.25 57.2	14,300 63,606	5,790 25,754	27,200 120,986	7.39 3.35
FCYR 4 1/2	TRB	4.50 114.3	1.75 44.5	5.44 138.1	.59 15.1	1.000 25.40	+0.0007 /-0 +0.02 / - 0	1.81 46.0	1.75 44.5	14,300 63,606	5,790 25,754	20,000 88,960	10.19 4.62
FCYR 5	TRB	5.00 127.0	3.75 95.3	5.94 150.8	.72 18.3	1.750 44.45	+0.0007 /-0 +0.02 / - 0	2.85 72.3	3.00 76.2	35,800 159,238	13,300 59,158	58,400 259,763	12.99 5.89
FCYR 6	TRB	6.00 152.4	3.25 82.6	6.94 176.2	.72 18.3	2.250 57.15	+0.0007 /-0 +0.02 / - 0	3.38 85.7	3.25 82.6	35,800 159,238	14,200 63,162	58,400 259,763	20.04 9.09

*Dynamic thrust load rating based on application of a centric, axial load. Fatigue life calculations for combined radial and thrust loading require special considerations and Application Engineering should be contacted.

Metric dimensions for reference only.

Not all parts are available from stock. Please contact customer service for availability (800) 626-2120.

For more information on bearing capabilities outside of our standard offering, please contact Application Engineering (800) 626-2093.

Cam Follower Engineering see page B-147.

For more information on bearing capabilities outside of our standard offering, please contact Application Engineering (800) 626-2093.

McGILL® TRAKROL Cam Follower Bearings

Basic Construction Type: Stud Type V-Grooved Outside Diameter

Rolling Elements: Ball or Tapered Roller Bearing Insert

Bearing Material: Bearing Quality Steel

Seal Type: Metal Extension Plug and Rubber Lip Seal Ball

Lubrication: Polyurea Thickened Grease NLGI #2

Stem Configuration: Concentric / Eccentric

Mounting Feature: Hex Hole on Thread Face

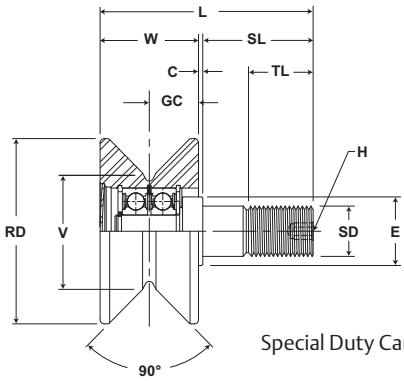

Special Duty Cam Follower

VCF

Part No.	Insert Type	RD	W	V	GC	SD		SL	C	L		ECC	G	BD
With LUBRI-DISC Seals	Ball or Tapered Roller Bearing	Roller Diameter	Roller Width	Point Diameter	Groove Center	Stud Diameter		Stud Length	Endplate Extension	Length Overall	Thread Length	Eccentric Base Modifier VCFE-XX		
		inch mm		inch mm		inch mm		inch mm		inch mm		inch mm		
		(Ref)	(Ref)	(Ref)	(Ref)	Nom.	Tol.	(Ref)	(Ref)	(Ref)	(Ref)	(Ref)	+0/-.010	±.001
VCF 2 1/2	BB	2.50 63.5	1.31 33.3	1.50 38.1	.69 17.5	1.00 25.4	+0/-0.001 +0/- 0.03	1.75 44	0.06 2	2.94 75	0.88 22	-	-	-
VCFE 2 1/2												.03 1	.86 22	1.00 25
VCF 3 1/2	BB	3.50 88.9	1.69 42.9	2.25 57.2	.88 22.2	1.25 31.8	+0/-0.001 +0/- 0.03	2.00 51	0.06 2	3.69 94	1.13 29	-	-	-
VCFE 3 1/2												.03 1	.98 25	1.19 30
VCF 4 1/2	TRB	4.50 114.3	2.00 50.8	3.00 76.2	1.00 25.4	1.25 31.8	+0/-0.001 +0/- 0.03	2.50 64	0.06 2	4.50 114	1.75 44	-	-	-
VCFE 4 1/2												.06 2	1.23 31	1.75 44
VCF 5 1/2	TRB	5.50 139.7	2.00 50.8	4.00 101.6	1.00 25.4	1.25 31.8	+0/-0.001 +0/- 0.03	2.75 70	0.06 2	4.75 121	1.75 44	-	-	-
VCFE 5 1/2												.06 2	1.36 34	1.81 46
VCF 6 1/2	TRB	6.50 165.1	3.00 76.2	5.00 127.0	1.50 38.1	2.00 50.8	+0/-0.001 +0/- 0.03	4.50 114	0.06 2	7.50 191	2.50 64	-	-	-
VCF 7 1/2	TRB	7.50 190.5	3.00 76.2	6.00 152.4	1.50 38.1	2.50 63.5	+0/-0.001 +0/- 0.03	5.50 140	0.06 2	8.50 216	3.25 83	-	-	-
VCF 8 1/2	TRB	8.50 215.9	3.00 76.2	7.00 177.8	1.50 38.1	2.50 63.5	+0/-0.001 +0/- 0.03	5.50 140	0.06 2	8.50 216	3.25 83	-	-	-

*Dynamic thrust load rating based on application of a centric, axial load. Fatigue life calculations for combined radial and thrust loading require special considerations and Application Engineering should be contacted.

Metric dimensions for reference only.

Not all parts are available from stock. Please contact customer service for availability (800) 626-2120.

For more information on bearing capabilities outside of our standard offering, please contact Application Engineering (800) 626-2093.

TRAKROL Cam Follower Bearings

McGILL®

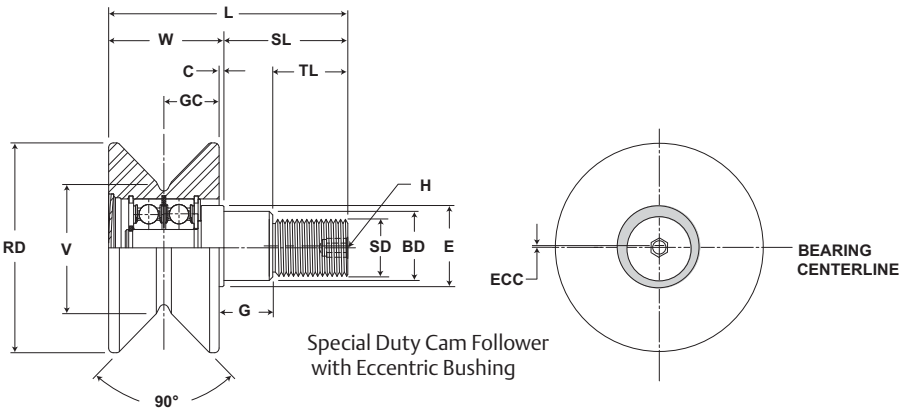

Special Duty Cam Follower with Eccentric Bushing

VCF

Track Roller Dynamic Rating	Thrust Capacity	Track Roller Static Rating	H Hex Hole	E Min. Clamping Diameter	Housing Bore Diameter		Thread Type	Clamping Torque	WT Bearing Weight
lb/N	lb/N	lb/N	inch mm (Ref)	inch mm (Ref)	inch mm Nom.	inch mm Tol.		in-lb Nm	lb kg
2,520 11,209	1,320 5,871	1,370 6,094	.25 6	1.0 25	.7510 19	+.0002/-.0003 +.0005/-.0008	3/4-16	1,250 142	1.3 .59
					1.003 25.47	±.001 ±.025			
3,490 15,524	1,830 8,140	2,000 8,896	.38 10	1.0 25	.8760 22	+.0002/-.0003 +.0005/-.0010	7/8-14	1,500 170	3.2 1.45
					1.190 30.23	±.001 ±.025			
14,300 63,606	5,790 25,754	16,000 71,168	.44 11	1.75 44	1.2510 32	+.0002/-.0003 +.0005/-.0013	1 1/4-12	3,440 388	6.8 3.08
					1.753 44.52	±.001 ±.025			
14,300 63,606	5,790 25,754	16,000 71,168	.44 11	1.75 44	1.2510 32	+.0002/-.0003 +.0005/-.0015	1 1/4-12	3,440 388	10.7 4.85
					1.815 46.10	±.001 ±.025			
35,800 159,238	13,300 59,158	40,000 177,920	.88 22	3.25 83	2.0010 51	+.0002/-.0003 +.0005/-.0017	2-12	5,000 566	26.1 11.84
35,800 159,238	14,200 63,162	62,000 275,776	.88 22	3.25 83	2.5010 64	+.0002/-.0003 +.0005/-.0018	2 1/2-12	5,000 566	34.0 15.42
35,800 159,238	14,200 63,162	62,000 275,776	.88 22	3.25 83	2.5010 64	+.0002/-.0003 +.0005/-.0019	2 1/2-12	5,000 566	45.0 20.41

Clamping torque is based on dry threads. If threads are lubricated, use half of value shown.

McGILL® TRAKROL Cam Follower Bearings

Basic Construction Type: Yoke Type V-Grooved Outside Diameter

Rolling Elements: Tapered Roller Bearing Insert

Bearing Material: Bearing Quality Steel

Seal Type: Rubber Lip Seal

Lubrication: Polyurea Thickened Grease NLGI #2

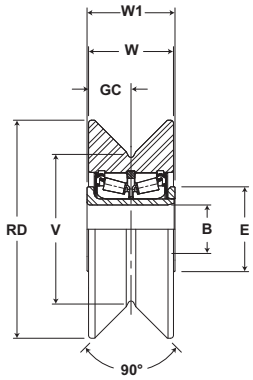

VCYR

Part No.	Insert Type	RD	W	V	GC	B		W1	E	Track Roller Dynamic Rating	Thrust Capacity	Track Roller Static Rating	WT
With LUBRI-DISC Seals	Ball or Tapered Roller Bearing	Roller Diameter	Roller Width	Point Diameter	Groove Center	Bore Diameter		Endplate Extension	Min. Clamping Diameter				Bearing Weight
		inch mm		inch mm		inch mm		inch mm		lb/N	lb/N	lb/N	lb kg
		(Ref)	(Ref)	(Ref)	(Ref)	Nom	Tol	(Ref)	(Ref)				
VCYR 4 1/2	TRB	4.50 114	1.75 44	3.00 76	1.00 25	1.0000 25.40	+0.0007/-0 +0.02/- 0	1.81 46	1.75 44	14,300 63,606	5,790 25,754	20,000 88,960	4.98 2.26
VCYR 5 1/2	TRB	5.50 140	2.25 57	4.00 102	1.00 25	1.2500 31.75	+0.0007/-0 +0.02/- 0	2.31 59	2.25 57	14,300 63,606	5,790 25,754	27,100 120,541	11.11 5.03
VCYR 6 1/2	TRB	6.50 165	2.75 70	5.00 127	1.50 38	1.7500 44.45	+0.0007/-0 +0.02/- 0	2.88 73	3.00 76	35,800 159,238	13,300 59,158	56,200 249,978	24.72 11.21

*Dynamic thrust load rating based on application of a centric, axial load. Fatigue life calculations for combined radial and thrust loading require special considerations and Application Engineering should be contacted.

Metric dimensions for reference only.

Not all parts are available from stock. Please contact customer service for availability (800) 626-2120.

For more information on bearing capabilities outside of our standard offering, please contact Application Engineering (800) 626-2093.

Cam Follower Engineering see page B-147.

For more information on bearing capabilities outside of our standard offering, please contact Application Engineering (800) 626-2093.

Load Ratings and Life

Life Calculations

The L10 (rating) life for any given application and bearing selection can be calculated in terms of millions of revolutions by using the bearing Basic Dynamic Rating and applied radial load (or, equivalent radial load in the case of radial bearing applications having combined radial and thrust loads). The L10 life for any given application can be calculated in terms of hours, using the bearing Basic Dynamic Rating, applied load (or equivalent radial load) and suitable speed factors, by the following equation:

$$L_{10} = \left(\frac{C}{P}\right) \times \frac{1{,}000{,}000}{60 \times n} = \left(\frac{C}{P}\right)^{10/3} \times \frac{16667}{n}$$

Where:

L_{10} = The # of hours that 90% of identical bearings under ideal conditions will operate at a specific speed and condition before fatigue is expected to occur.

C = Basic Dynamic Rating (lbs) 1,000,000 Revolutions

P = Constant Equivalent Radial Load (lbs)

n = Speed (RPM)

Additionally, the ABMA provides application factors for all types of bearings which need to be considered to determine an adjusted Rated Life (Lna). L10 life rating is based on laboratory conditions yet other factors are encountered in actual bearing application that will reduce bearing life. Lna life rating takes into account reliability factors, material type, and operating conditions.

$$L_{na} = a_1 \times a_2 \times a_3 \times L_{10}$$

Where:

L_{na} = Adjusted Rated Life.

a_1 = Reliability Factor. Adjustment factor applied where estimated fatigue life is based on reliability other than 90% (See Table No 1).

Table No. 1 Life Adjustment Factor for Reliability

Reliability %	L_{na}	a_1
90	L10	1
95	L5	0.62
96	L4	0.53
97	L3	0.44
98	L2	0.33
99	L1	0.21
50	L50	5

a_2 =Material Factor. Life adjustment for bearing race material. Power Transmission Solutions bearing races are manufactured from bearing quality steel. Therefore the a_2 factor is 1.0.

a_3 = Life Adjustment Factor for Operating Conditions. This factor should take into account the adequacy of lubricant, presence of foreign matter, conditions causing changes in material properties, and unusual loading or mounting conditions. Assuming a properly selected and mounted bearing having adequate seals and lubricant, the a3 factor should be 1.0.

Load Ratings and Life Continued

Vibration and shock loading can act as an additional loading to the steady expected applied load. When shock or vibration is present, an a3 Life Adjustment Factor can be applied. Shock loading has many variables which often are not easily determined. Typically, it is best to rely on one's experience with the particular application. Consult Application Engineering for assistance with applications involving shock or vibration loading.

The a3 factor takes into account a wide range of application and mounting conditions as well as bearing features and design. Accurate determination of this factor is normally achieved through testing and in-field experience. Power Transmission Solutions offers a wide range of options which can maximize bearing performance. Consult Application Engineering for more information.

Variable Load Formula

Root mean load (RML) is to be used when a number of varying loads are applied to a bearing for varying time limits. Maximum loading still must be considered for bearing size selection.

$$\text{RML}^* = \sqrt[10/3]{\frac{(L_1^{10/3}N_1)+(L_2^{10/3}N_2)+(L_3^{10/3}N_3)}{100}}$$

Where:
RML = Root Mean Load (lbs.)
L_1, L_2, etc. = Load in pounds
N_1, N_2, etc. = Percent of total time operated at loads L_1, L_2, etc.

* Apply RML to rating at mean speed to determine resultant life.

Mean Speed Formula

The following formula is to be used when operating speed varies over time.

$$\text{Mean Speed} = \frac{S_1N_1+S_2N_2+S_3N_3}{100}$$

S_1S_2, etc = Speeds in RPM
N_1N_2, etc = Percentage of total time operated at speeds S_1S_2, etc

Load Ratings and Life Continued

Bearing Life In Oscillating Applications

The equivalent rotative speed (ERS) is used in life calculations when the bearing does not make complete revolutions during operation. The ERS is then used as the bearing operating speed in the calculation of the L10 (Rating) Life. The formula is based on sufficient angular rotation to have roller paths overlap.

ERS = Equivalent Rotative Speed

N = Total number of degrees per minute through which the bearing will rotate.

$$ERS = \frac{N}{360}$$

In the above formula, allowance is made for the total number of stress applications on the weakest race per unit time, which, in turn, determines fatigue life and the speed factors. The theory behind fretting corrosion is best explained by the fact that the rolling elements in small angles of oscillation retrace a path over an unchanging area of the inner or outer races where the lubricant is prevented by inertia from flowing in behind the roller as the bearing oscillates in one direction. Upon reversal, this small area of rolling contact is traversed by the same roller in the dry state. The friction of the two unlubricated surfaces causes fretting corrosion and produces failures which are unpredictable from a normal life standpoint.

With a given bearing selected for an oscillating application, the best lubrication means is a light mineral oil under positive flow conditions. With a light oil, there is a tendency for all areas in the bearing load zone to be immersed in lubricant at all times. The full flow lubrication dictates that any oxidized material which may form is immediately carried away by the lubricant, and since these oxides are abrasive, further wear tends to be avoided. If grease lubrication must be used, it is best to consult with either the bearing manufacturer or the lubricant manufacturer to determine the best possible type of lubricant. Greases have been compounded to resist the detrimental effect of fretting corrosion for such applications.

Static Load Rating

The “static load rating” for rolling element bearings is that uniformly distributed static radial load acting on a non-rotating bearing, which produces a contact stress of 580,000 psi (roller bearings) or 607,000 psi (ball bearings) at the center of the most heavily loaded rolling element. At this stress level, plastic deformation begins to be significant. Experience has shown that the plastic deformation at this stress level can be tolerated in most bearing applications without impairment of subsequent bearing operation. In certain applications where subsequent rotation of the bearing is slow and where smoothness and friction requirements are not too exacting, a higher static load limit can be tolerated. Where extreme smoothness is required or friction requirements are critical, a lower static load limit may be necessary.

Minimum Bearing Load

Skidding, or sliding, of the rolling elements on the raceway instead of a true rolling motion can cause excessive wear. Applications with high speeds and light loading are particularly prone to skidding. As a general guideline, rolling element bearings should be radially loaded at least 2% of Basic Dynamic Rating. For applications where load is light relative to the bearings dynamic load rating, consult Application Engineering for assistance.

Load Ratings and Life Continued

Bushing Type Cam Follower/ Yoke Roller

Because bushing type bearings operate with sliding motion instead of rolling motion, they do not follow standard bearing life theory. Instead, life is based on an acceptable wear rate based on operating load and speed for the given bearing size. The following chart and examples are provided to aid in selection of bushing type cam followers

To determine maximum bearing capacity at a given speed, read vertical load scale under basic bearing size under consideration at proper speed.

Example:

Determine load capacity of BCF-3/4-S at 100 RPM. Read down vertical load scale under basic 3/4 size to intersection of horizontal line for maximum speed of 100 RPM. Load rating would be 100 pounds.

To determine minimum bearing size required for application, draw horizontal line through application speed until application load can be read on one of the vertical load scales. The basic bearing size can then be read at the top of the column.

Example:

Application speed = 200 RPM
Application load = 50 pounds

Minimum basic bearing size required would be a BCF or BCYR - 11/4-S.

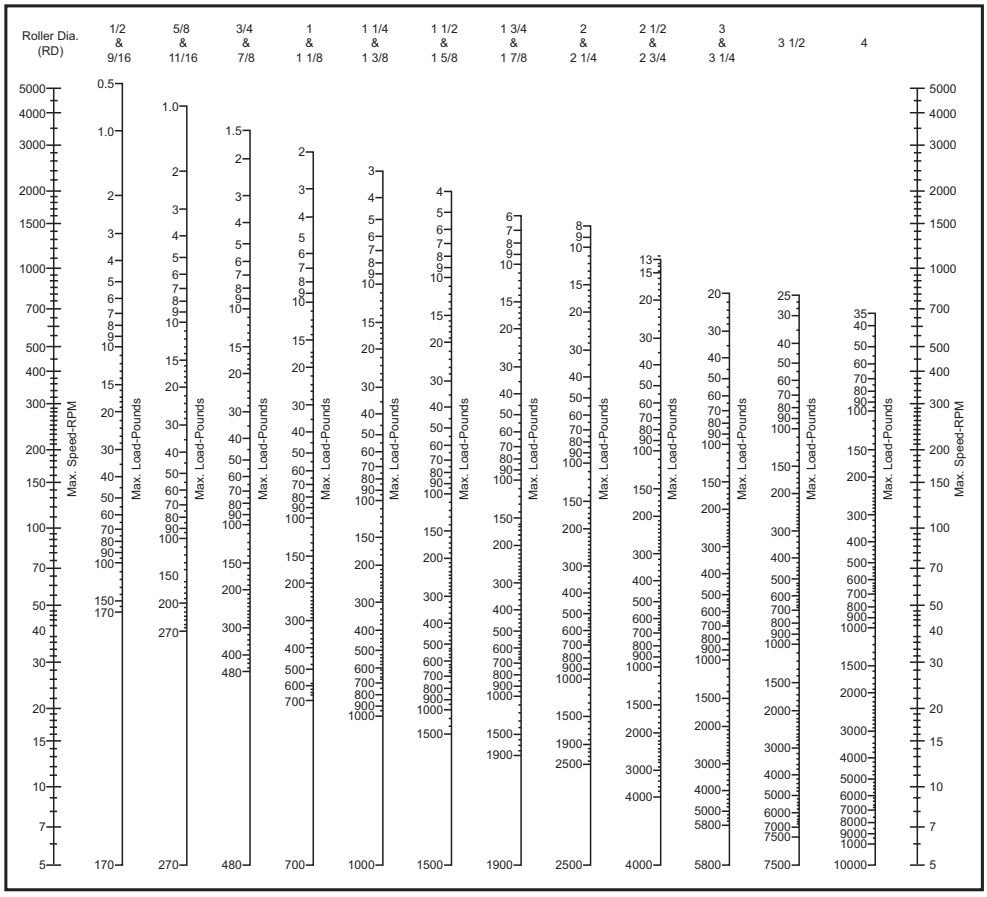

Values based on continuous rotation and no lubrication

Cam Follower Engineering Section

Load Ratings

ABMA and ISO Dynamic and Static Load Ratings, when listed, follow standard calculations as accepted by ABMA and ISO. These ratings are based on a bearing that is fully supported within a rigid housing. Cam follower and track roller bearings generally operate with an unsupported outer ring in rolling contact with a cam or track. As such, these standard ratings cannot be applied. ABMA and ISO dynamic and static load ratings when listed in the dimension tables for cam follower and track roller bearings are therefore provided for comparison only.

When listed, Track Roller Dynamic Load Rating is to be used for the purpose of bearing size selection or theoretical bearing life calculation. The track roller rating considers the unsupported outer ring condition of the cam follower or track roller bearing design. The Maximum Permissible Load as listed considers stud strength. Static loads should not exceed the Maximum Permissible Load.

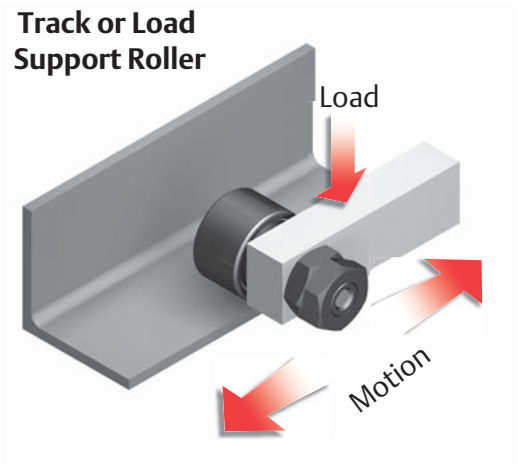

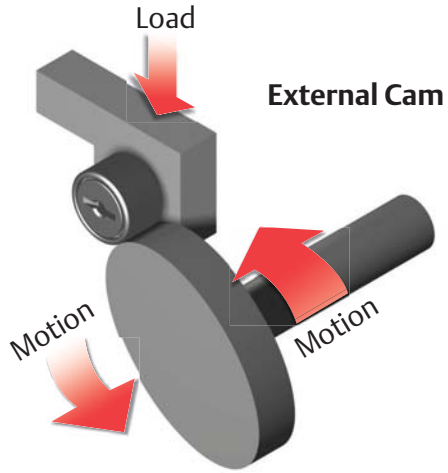

Track Roller Static Load Rating as listed considers internal rolling element contact stress. Static loads greater than the Static Rating may impair subsequent dynamic operations.

Load Considerations

In any bearing application, radial, shock and thrust loads must be taken into consideration to help assure successful performance.

Radial Load

Maximum dynamic radial load should not exceed 50% of Basic Dynamic Rating. If radial load and/or root mean load exceed 50% of Basic Dynamic Rating, life calculations must be reviewed by Application Engineering. If dynamic radial loads exceed 25% of Basic Dynamic Rating, consideration should be given to use of heavy stud option (CFH series) or yoke type (CYR, CYR-CR, CYRD, MCYR, MCYRD series). Applications involving reversing radial loads should be reviewed by Application Engineering.

Cam Follower Engineering Section continued

Shock Load

The load ratings in this catalog are based on uniform and steady loading. When the loading is of a shock nature and/or vibration is present, or the loading is indeterminate, a bearing of greater rating must be selected. If such conditions exist, it is advisable to use the Load Factor as shown in the table below. The actual bearing load should be multiplied by the appropriate load factor and the resultant value used to calculate the bearing life or to determine the required Basic Dynamic Rating as described in the General Engineering Section.

Type of Load	Load Factor
Uniform and Constant	1.0
Light Shock	1.5
Moderate Shock	2.0
Heavy Shock	3.0

Thrust Load Series CF, CFH, CYR, BCF, BCYR, CF-CR, CYR-CR, SDCF, SDMCF, MCF, MCYR

Designed for radial loads, these series' bearings do not have design features that help them to support thrust loading. Therefore, these cam followers and track rollers should be mounted to minimize, or preferably eliminate, the possibility of any thrust loading on the outer ring.

Series CFD, CYRD, MCFD, MCYRD

These series provide improved thrust capability versus the above needle rolling element and bushing type designs. They are designed using a double row of full complement cylindrical rolling elements. Their construction helps to support incidental thrust sometimes associated with cam follower and track roller applications.

Series PCF, FCF, VCF, PCYR, FCYR, VCYR

These series use radial ball and tapered roller bearing assemblies. These constructions make possible successful bearing operation with various combinations of radial and thrust loads. Refer to dimension tables for specific thrust load ratings.

Track Design

Since either cam followers or cam yoke rollers are merely one component of a two-piece bearing construction involving (1) the cam follower or cam yoke roller and (2) the track or cam on which it operates, some consideration must be given to selection of track or cam materials, since they must be considered bearing components and have a direct effect upon ultimate life and performance of the cam roll application. From the standpoint of track design where bearings are used as support or guide rollers, it is often difficult to obtain high hardness and tensile strength values for the machine members against which the bearings operate. In most applications, in the interest of economy, relatively soft structural materials can be applied. Where dimensional accuracy is not extremely critical, the work hardening of ferrous, low carbon track materials, accompanied by relatively small amounts of wear-in of the bearing into the track surface generally results in satisfactory bearing performance. It is common, for instance, in the application of cam follower or cam yoke roller bearings as lift truck mast rollers to employ formed structural steel sections as bearing track support members. The wearing-in and work hardening of the track surface generally results in a satisfactory bearing application, providing loads are not excessive.

Cam Follower Engineering Section continued

Track Capacity

Track capacity of all cam followers and cam yoke roller bearings is the load which a steel track of a given tensile strength will withstand without plastic deformation or brinelling of the track surface. The following tables list track capacities and track capacity factors for steel tracks, as applied to all cam follower and cam yoke roller bearings except crowned O.D. versions. For the crowned O.D. versions, multiply by 0.8 to obtain the track capacity ratings.

To obtain track capacities for a track hardness other than 40 Rockwell "C" scale (180,000 psi or 1242 Mpa tensile strength), multiply the track capacity by the track capacity factor in Table 1. Regardless of the resulting track capacity, dynamic load should not exceed 50% of the dynamic rating as a track roller and static load should not exceed the static rating as a track roller for that bearing.

Table 1 - Track Capacity Factor

Track Tensile Strength, psi	Track Tensile Strength, MPa	Track Hardness Rockwell "C"	Track Capacity Factor
60,000		69	0.111
80,000		85	0.198
100,000		95	0.309
120,000	828	26	0.445
140,000	966	32	0.607
160,000	1104	36	0.792
180,000	1242	40	1.000
200,000	1380	44	1.237
220,000	1518	47	1.495
240,000	1656	50	1.775
260,000	1794	53	2.090
280,000	1932	56	2.420
300,000	2070	58	2.780

Table 2 - Track Capacity, Inch Series Bearings

Basic Bearing Number	Track Capacity Lbs.	Basic Bearing Number	Track Capacity Lbs.
1/2-N	485	1 7/8	5,415
1/2	530	2	7,350
5/9	595	2 1/4	8,260
5/8-N	725	2 1/2	11,100
5/8	785	2 3/4	12,250
2/3	865	3	15,050
3/4	1,085	3 1/4	16,300
7/8	1,260	3 1/2	20,200
1	1,835	4	26,200
1 1/8	2,060	5	38,600
1 1/4	2,660	6	55,600
1 3/8	2,920	7	75,600
1 1/2	3,760	8	94,000
1 5/8	4,065	9	118,000
1 3/4	5,060	10	145,000

Table 3 - Track Capacity, Metric Series Bearings

Basic Bearing Number	Track Capacity Newtons	Basic Bearing Number	Track Capacity Newtons
M CFR-13-X	2390	M CFR-52-X	24000
M CFR-16-X	3675	M CYRR-25-X	24000
M CYRR-5-X	3675	M CFD-52-X	24000
M CFR-19-X	4360	M CYRD-25-X	24000
M CYRR-16	4360	M CFR-62-X	35500
M CFR-22-X	5340	M CYRR-30-X	34250
M CYRR-8-X	6875	M CFD-62-X	35500
M CFR-26-X	6310	M CYRD-30-X	34250
M CFR-30-X	7940	M CFR-72-X	39750
M CYRR-10-X	7940	M CYRR-35-X	38125
M CFR-32-X	8475	M CFD-72-X	39750
M CYRR-12-X	8475	M CYRD-35-X	38125
M CFR-35-X	12300	M CFR-80-X	54750
M CYRR-15-X	12300	M CYRR-40-X	45875
M CFD-35-X	12300	M CFD-80-X	54750
M CYRD-15-X	12300	M CYRD-40-X	45875
M CFR-40-X	15000	M CFR-85-X	58000
M CYRR-17-X	15000	M CYRR-45-X	48750
M CFD-40-X	15000	M CYRD-45-X	48750
M CYRD-17-X	15000	M CFR-90-X	61500
M CFR-47-X	21750	M CYRR-50-X	51625
M CYRR-20-X	21750	M CFD-90-X	61500
M CFD-47-X	21750	M CYRD-50-X	51625
M CYRD-20-X	21750		

Cam Follower Engineering Section continued

Cam Design

Most cam applications are similar in many respects to the track or support roller applications; however, usually bearing speeds are higher due to the multiplication of cam revolutions per minute by the ratio of the cam O.D. to the cam follower O.D. For cam applications, oil lubrication is preferred due to the tendency towards higher speeds noted above. Where such lubrication methods are not possible, frequent replacement of grease should be followed.

In the application of box or drum cams, it is possible to obtain differential rotation of the cam follower outer race as well as associated load reversals. Unless proper cam hardness and materials are employed as well as ample lubrication, excessive cam or cam follower wear may result. In box cams of this nature, the cam rise and cam fall should be watched closely, since the load reversal encountered can cause shock loads in excess of the capacity of the stud or the bearing.
The above precaution would also apply to ordinary circular cams, and instantaneous loads due to rapid cam rise should be carefully calculated and kept below the maximum recommended load or static capacity as listed for the bearing.

In ordinary cam design it is possible to employ the most efficient materials for best resistance to fatigue and brinelling. Attainment of high track surface hardnesses associated with good wear resistance are quite feasible. The same general precautions with regard to tensile strength versus hardness, as listed under track design above, should be followed for cam design; and applications involving high marginal bearing or cam loading should be referred to Application Engineering for review.

Cam Follower and Track Roller Bearing Lubrication

Standard series cam followers and track rollers as listed are factory filled with an NLGI 2 grease suitable for operating temperatures of -20°F to +250°F. Consult Application Engineering regarding grease compatibility issues.

Series	Type
CF, CFH, CYR, CFD, CYRD, MCF, MCYR, MCFD, MCYRD,	Lithium Soap
SDCF, SDMCF	Lithium Complex Soap
PCF, PCYR, FCF, FCYR, VCF, VCYR (Ball Bearing)	Lithium Soap
PCF, PCYR, FCF, FCYR, VCF, VCYR (Tapered Roller Bearing)	Polyurea
BCF, BCYR	Not grease lubricated, coated with preservative oil.
CF-CR, CYR-CR	Aluminum Complex Soap USDA H-1 Authorized*

*Authorized by USDA for use in federally inspected meat and poultry plants. USDA H-1 authorized lubricants may be used on equipment as a lubricant or anti-rust film in locations in which there is exposure of the lubricated part to the edible product.

Frequency of lubrication depends primarily upon the speed of rotation of the bearing, the type of lubrication employed and the amount of contamination present in the application. It is possible to achieve extended operating life without lubrication where speeds are low and contamination is not excessive. This is primarily true in track support applications where bearing rotation is intermittent.

For continuously rotating applications, it is necessary to either provide continuous oil lubrication or else frequent grease lubrication, depending upon the severity of service. Automatic lubrication devices are ideal for intermittent lubrication, since accurate metering of grease and consistent relubrication is maintained through the use of these devices. In applications involving paper dust and other similar abrasive contaminants, relubrication must be resorted to at more frequent intervals and Application Engineering should be consulted for these critical applications.
In LUBRI-DISC® sealed cam followers and track rollers, small vents or reliefs are provided in each seal to enable relubrication of the bearing. To avoid loss of seal efficiency, these seal vents are kept as small as possible, and for this reason the rate of relubrication should be kept at lower levels to avoid seal displacement.

Cam Follower Engineering Section continued

Reduced Maintenance Cam Followers and Track Rollers

Series CFD, CYRD, SDCF, SDMCF, PCF, FCF, VCF cam followers and track rollers are designed for use without relubrication and are not provided as standard with provisions for relubrication. These types of bearings may be limited by the life of the original grease fill and the ability of the seals to protect the bearing from contamination.

Lubrication of Stud-Type Cam Followers and Track Rollers

Series CF, CFH, CF-CR, MCF and MCFD cam followers and track rollers with integral studs are supplied with potential for 3 alternate means of lubrication; namely, through either end of the stud with an appropriate grease fitting or through the radial hole in the stem of the stud.

- The four smallest sizes in inch series CF, CFH, CF-CR (1/2, 9/16, 5/8 and 11/16) and the three smallest sizes in metric series MCF (13, 16 and 19) are an exception to the above information, since they contain neither the radial oil hole in the stem nor the axial hole at the threaded end of the stud. Therefore, these bearings may only be lubricated from the flange end of the stud in the screwdriver slot type only.
- The radial oil hole is not present in metric series MCF sizes through 26 mm OD.
- Bearings utilizing the hex hole feature, unless noted otherwise on the dimension tables, do not have the axial lubrication hole present at that end.
  Since in most cam followers two axial lubrication holes are provided, it is necessary to plug one or both of the holes, depending upon the type of relubrication means employed. For this purpose, oil hole plugs are provided in the bearing wrapping and may be press fitted in the reamed lubrication fitting hole. They are designed to withstand normal relubrication pressures. If the stem radial oil hole is present but not used for relubrication, it should be covered by the housing; therefore, no plug is supplied for this hole.

Grease Lubrication Fittings

Series CF, CFH, CF-CR

Basic Bearing No. Bearing Size	Drive Fitting Size	Ref. Alemite No.	Fitting Included
1 /2 to 11/16 incl.	1/8”	3019	No
3 /4 to 2 3/4 incl.	3/16”	1728-B	No
3 to 4 incl.	1/4”	1743-B	Yes*
5 to 10 incl.	1/4” NPT	1627-B	No
* For hex hole option only.			

Series MCF, MCFD

Basic Bearing No. Bearing Size	Drive Fitting Size	Fitting Included mm
13	3.1	Yes
16 to 26 incl.	4	Yes
30 to 40 incl.	6	Yes
47 to 90 incl.	8	Yes

Lubrication of Yoke-Type Cam Followers and Track Rollers

The relubrication of yoke-type cam follower and track roller bearings is straight forward and is accomplished by means of a radial oil hole and annular lubrication groove found on the inner race of the bearing series. The mounting pin for this bearing series must be drilled axially and radially to properly line up with the groove and hole of the CYR bearing inner race to effect proper lubrication.

Cam Follower Engineering Section continued

Mounting Details - Stud Type Cam Followers and Track Rollers Series CF, CFH, BCF, CF-CR, CFD, MCF, MCFD

Proper mounting of stud type cam follower and track roller bearings require a close fit between the bearing stud and the housing hole. The endplate must be backed up by the housing member face. Likewise the face of the housing adjacent to the bearing endplate face should be square to the housing bore. The following are some general guidelines and details to bear in mind when installing the above series' bearings.

1. **Inspect housing.**

- Clean, remove burrs and sharp edges.
- Check housing bore diameter. The stud diameter should have a tight fit in the housing bore. Refer to the recommended housing bore diameters given in the dimensional tables.

2. **Press stud into housing.**

- For best bearing performance, bearing should be mounted with raceway radial lubrication hole in the unloaded portion of the raceway. Raceway radial hole is oriented in line with stem radial hole.
- Direct pressure against solid end of stud, not against the flanged portion.
- Do not apply pressure against outer ring face.
- Use arbor press whenever possible.
- Do not hammer on bearing faces.

3. **Install nut and lock washer.**

- Follow recommended clamping torque on dimensional table. Do not over tighten, otherwise undue stress may be set up in stud. Overtightening nut can also cause stretching of the stud diameter with consequent loosening of the stud in the housing member.
- A screwdriver slot is provided at the flanged end of the stud for the purpose of preventing the stud from turning when the nut is tightened. The bottom of the screwdriver slot is rounded and in some cases it may be necessary to use a special screwdriver having a rounded edge to hold the stud securely.
- An optional hexagonal hole is provided in the stud face on selected sizes for use with applications requiring greater than average thread torque or for ease of installation. In this modification, the ability to relubricate through the flange end of the stud, unless otherwise noted in the dimension tables, is eliminated.

Cam Follower Engineering Section continued

Blind Hole Mounting

Sometimes a stud type follower must be mounted where a nut and lock-washer cannot be used on the threaded portion. In such blind hole mountings, special care must be given to the fit-up of the stem in the housing.

- The drilling diameter used for tapping will generally result in a loose fit between the stud and housing hole. This can lead to premature fatigue fracture of the stud in applications with varying or reverse radial load. Press fitting the stud into a reamed hole without tapped threads would be better for these applications. The non-hardened stud can be retained by drilling and pinning, or by using a set screw to bear against the stud.
- Certain applications require blind hole mounting into tapped threads. The hex hole option should be used in these cases so that adequate torque can be applied to provide good endplate support.

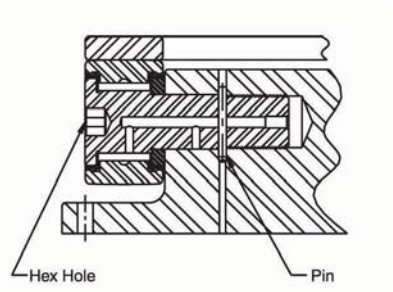

Blind Hole Mounting

Eccentric Bushing Mounting
Series CFE, BCFE, CFE-CR, SDCFE, SDMCFE, CFDE, MCFE, MCFDE, PCFE, FCFE, VCFE

In addition to the mounting details listed above, the following should be considered for proper mounting of stud type followers with the eccentric bushing option.

- The eccentric bushing diameter should have a .001” to .005” loose fit in the housing bore. Refer to dimensional table for specific housing bore diameter.

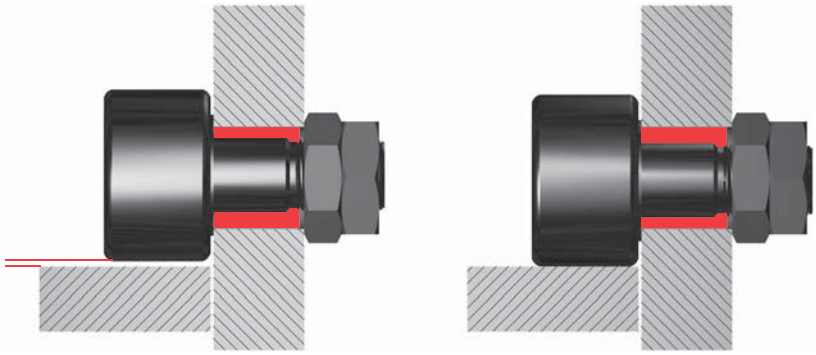

Cam Follower Engineering Section continued

- For proper end-wise clamping, housing width must be .010” wider than bushing length.
- Lock-nut or lock washer and nut is sufficient to hold the bearing at the desired position for most applications.
- Where a more positive means of holding a given position is required, the bushing and stem can be drilled for pinning. Bushing and exposed stem area is unhardened steel.
- Hex hole option allows more positive grip for adjustment and locking.

Series PCF, FCF, VCF, SDCF, SDMCF

These series cam followers and track rollers do not have an exposed stud face at the roller end. That face is enclosed by a metal plug assembled into the outer ring face. A loose stud fit in the housing is recommended so that minimal pressure is required to drive stud into the housing bore.

- Recommended housing bore fit for these series is .0005” to .0025” loose. Refer to dimensional table for specific housing bore diameter.
- A hex hole is provided at the threaded end of the stud for the purpose of holding the stud from turning when the nut is tightened.
- These series can not be tightened into a blind drilled and tapped hole.

Mounting Details - Yoke Type Cam Followers and Track Rollers Series CYR, CYR-CR, CYRD, MCYR, MCYRD

Endplate support is critical when mounting yoke-type series cam followers and track rollers. If the endplates are not properly backed up, they can be displaced from the inner ring. The preferred mounting method is to provide complete axial clamping of the endplates.

If the endplates can not be clamped end-wise, it is essential to have a close fit axially in the yoke in which the bearing is mounted to prevent the bearing endplates displacing axially.

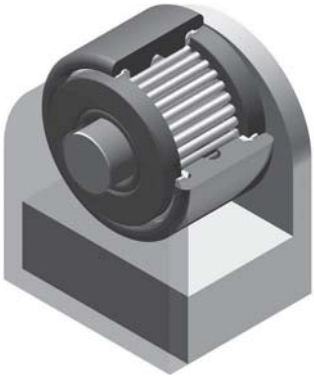

Cam Follower Engineering Section continued

The following are some general guidelines and details when installing yoke type followers.

1. **Inspect housing.**
- Clean, remove burrs and sharp edges.
2. **Check shaft diameter size.**
- Follow recommended shaft fits per table below. Refer to dimensional table for specific shaft diameter and tolerance.
3. **Press shaft through bearing within yoke housing**.
- For best bearing performance, mount follower with lubrication hole in the unloaded portion of the raceway.
- Apply pressure towards center or below on endplate face if pressing bearing onto shaft.
- Do not apply pressure against outer ring face.
- Use abor press whenever possible.
- Do not hammer on bearing faces.

Shaft Fit Selection - Inch Series CYR, CYR-CR, CYRD

Load	End-Wise Clamped	Fit	Shaft Condition
Light	Yes	Push	Not Hardened
Medium	Yes	Push	Hardened
Heavy	Yes	Drive or Press	Hardened
Light	No	Press	Not Hardened
Medium	No	Press	Hardened
Heavy	No	Press	Hardened

Shaft Fit Selection - Metric Series MCYR, MCYRD

Load	End-Wise Clamped	Fit	Shaft Condition
Light	Yes	g6	Not Hardened
Medium	Yes	g6	Hardened
Heavy	Yes	h6 or j6	Hardened
Light	No	j6	Not Hardened
Medium	No	j6	Hardened
Heavy	No	j6	Hardened

Special Modified Cam Follower and Track Roller Bearings

McGill offers certain options for the CF, CFH and MCF series cam follower and track roller bearings with low minimum order quantity and short order lead time. Contact customer service for price and delivery information, 1-800-626-2120.

Threaded Axial Lubrication Holes

Standard reamed axial hole is tapped to accommodate threaded lubrication fitting. This option is popular when using automatic lubrication systems.

Cam Follower Engineering Section continued

Specifications - Inch Series

Bearing OD Size	Thread Size
1/2 thru 11/16	Not Available
3/4 thru 1 3/8	1/4-28 UNF
1 1/2 thru 4	1/8 NPT

Specifications - Metric Series

Bearing OD Size	Thread Size
13	Not Available
16 thru 26	M6 X 0.75
35 thru 90	1/8 NPT

Axial Lubrication Holes Plugged

Options include threaded end, flange end or both ends of stud. Plugs are normally supplied loose in box. If the bearing is not to be lubricated in service, plugging the holes helps prevent entry of contamination. Bearings supplied with plugs installed saves user's time and provides a bearing ready to install.

Hex Hole or Screwdriver Slot at Threaded End of Stud

These options are typically selected when roller end of stud is not accessible at installation.

Annular Lubrication Groove at Stem Radial Hole

This option helps entry of lubricant through stud radial hole so that alignment of stem and housing lubrication holes is not critical

Hex Wrench Sizes

Basic Bearing No.	Hex Wrench Sizes	Basic Bearing No.	Hex Wrench Sizes
1/2	1/8	1 7/8	5/16
9/16	1/8	2	7/16
5/8	1/8	2 1/4	7/16
11/16	1/8	2 1/2	1/2
3/4	3/16	2 3/4	1/2
7/8	3/16	3	3/4
1	1/4	3 1/4	3/4
1 1/8	1/4	3 1/2	3/4
1 1/4	1/4	4	3/4
1 3/8	1/4	5	7/8
1 1/2	5/16	6	1
1 5/8	5/16	7, 8, 9, 10	1 1/4
1 3/4	5/16	-	-

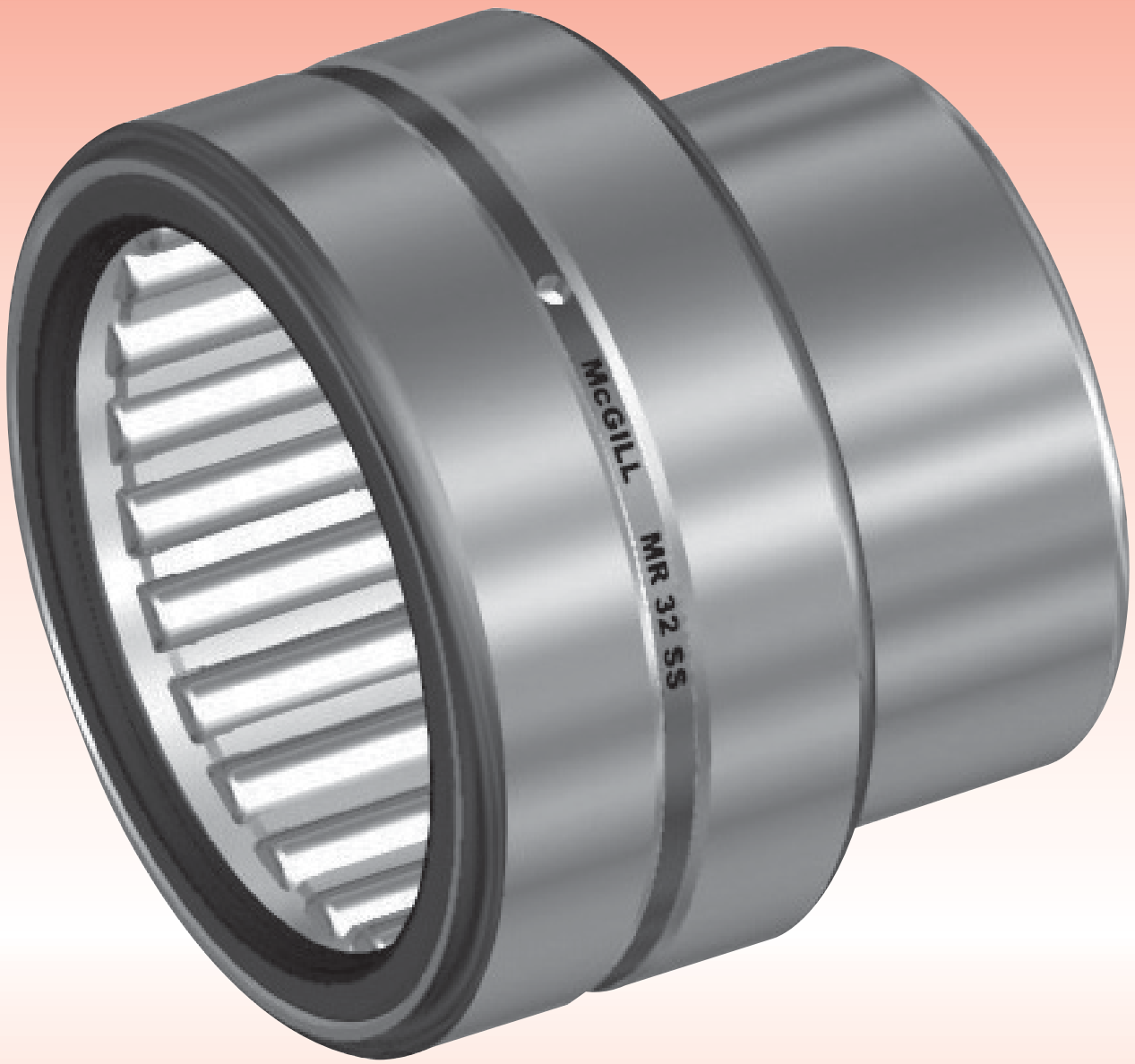
McGILL
MR 32 SS

Needle

Unmounted bearing assembly consisting of through hardened precision machined inner and outer raceways with either full complement or separated (cage) needle rolling elements. Depending on the bearing configuration the retainer can be land or roller riding and available with several seal options. Machined race needle bearings provide an antifriction solution when supporting rotating shafts with radial loads.

Bearing Configurations

Separable Or Non-Separable Inner/Outer Raceway

Shaft Diameter Range

1/2” To 9 1/4” And 15 mm To 235 mm

Materials

Bearing Quality Steel

Needle Selection Guide

		Product Series	Material / Roller Complement	Size Range: Inch	Size Range: Metric Equiv.
CAGEROL		MR	Bearing Steel Caged Needle Roller	5/8” - 9 1/4”	16 - 235
		MR Sealed		5/8” - 4 1/4”	16 - 108
		MR Narrow		5/8” - 6 1/2”	16 - 165
GUIDEROL		GR	Bearing Steel Full Complement Center Guided Needle Roller	1/2” - 9 1/4”	13 - 235
		GR Sealed		5/8” - 4 1/4”	16 - 108
		GR Narrow		5/8” - 6 1/2”	16 - 165
MULTI-ROL		RS	Bearing Steel Full Complement Needle Roller	3/4” - 3”	19 - 76
		RD		1 1/4” - 4”	32 - 102
Journal		200 Series	Bearing Steel Caged Roller	1 3/16” - 8 5/8”	30 - 220
		300 Series		1” - 5 3/16”	25 - 130

Metric dimensions are for reference only.
Listed needle roller bearings are manufactured to inch dimensions.

* For estimating purpose only, individually sizes may vary and are subject to change without notification

Design Characteristics						Features							
Limited Radial Space	Dynamic Load Rating	Static Load Rating	Oscillating Capability	High Speed	Relative Base Cost *	Separable Inner Race	Double Row	Oil Holes	Rubber Lip Seal	Metallic Shield	DS Matching	Separable Outer	Page No.
●	●	◒	◒	●	$	O	-	S	-	-	O	-	C-9
●	◒	○	◒	○	$	O	-	S	S	-	O	-	C-9
●	◒	○	◒	●	$	O	-	S	-	-	O	-	C-9
●	◒	◒	●	◒	$$$	O	-	S	-	-	O	-	C-21
●	◒	◒	●	○	$$$	O	-	S	S	-	O	-	C-21
●	◒	◒	●	◒	$$$	O	-	S	-	-	O	-	C-21
●	◒	◒	●	◒	$$	-	-	S	-	S	O	-	C-33
●	◒	●	●	◒	$$	-	S	S	-	S	O	-	C-34
◒	◒	◒	◒	◒	$$$	O	-	S	-	-	-	S	C-37
◒	◒	◒	◒	◒	$$$	O	-	S	-	-	-	S	C-37

Utilize Mi Inner Rings For Installations On Unhardened Shafts
Higher Radial Loads
Relubrication To Help Promote Long Operating Life
Contamination Barrier Lubrication Retention
Elevated Temperature Applications (When Applied With Suitable Lubricant)
Recommended For Load Sharing When Mounting Bearing Pairs
Available As Complete Assembly Or Individual Components

O = Optional
S = Standard
○ = Not Recommended

○ ◒ ◒ ● ●
Poor ⟷ Best

Note: Cost ranges are approximate in the secondary dimension

McGill CAGEROL®

McGill CAGEROL® machined race needle bearings are manufactured from bearing quality steel. Most sizes use crowned, or end relieved, rollers to help reduce end stresses and allows for greater misalignment. The rollers are separated by a steel retainer (cage) to help achieve higher speeds and provide a lubricant reservoir. CAGEROL® bearings are constructed with radial lubrication hole and groove on the outer and optional inner raceway (MI-series) for relubrication through the housing or shaft. Other options include a variety of seal configurations to either help prevent contaminant entry or contain the lubricant. Depending on your preference, these bearings are available in a wide variety of sizes and sealing options as illustrated on the pages to follow.

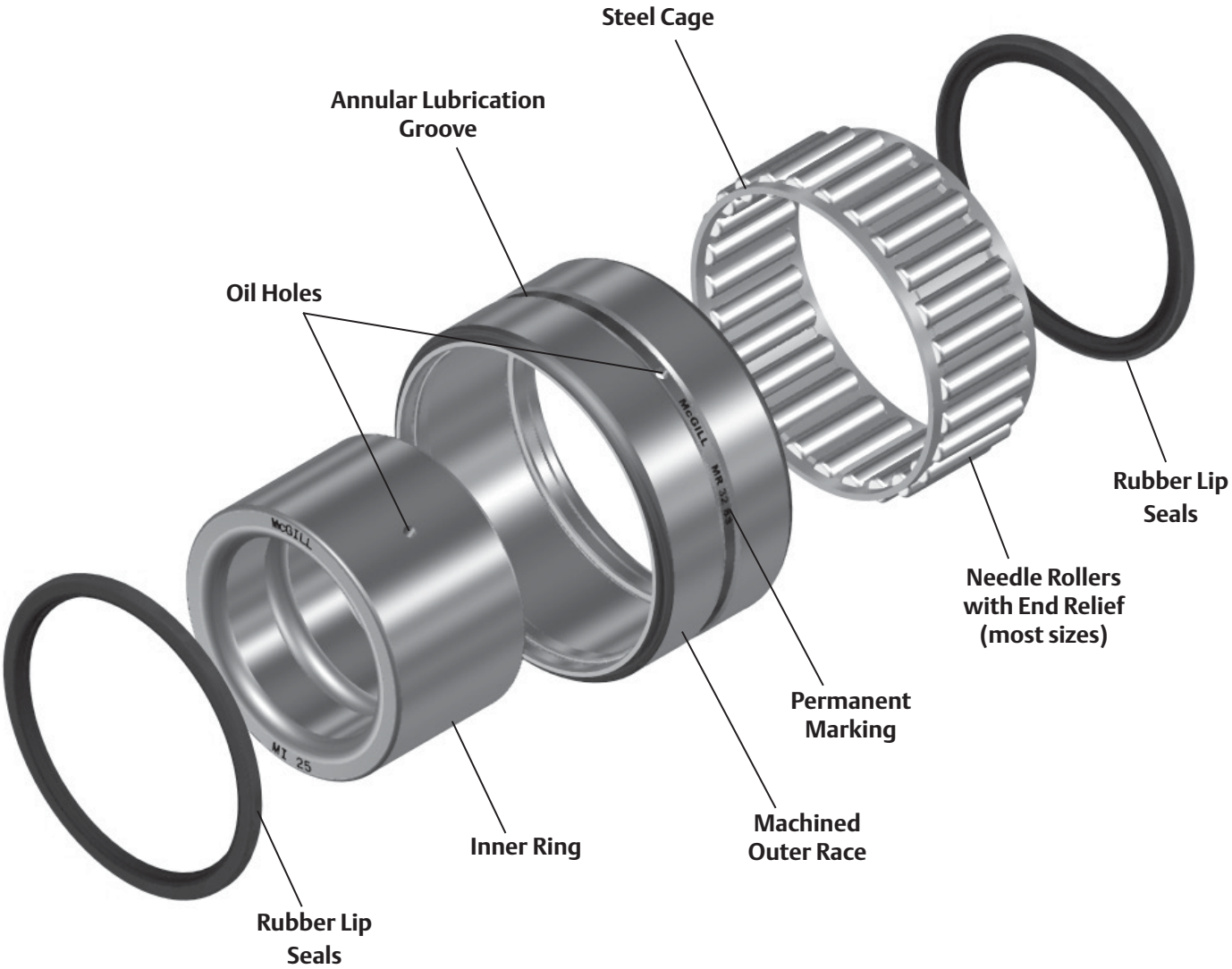

CAGEROL® Nomenclature

MR 18 N S DS

Basic Type
MR - CAGEROL® Bearing

Series Identifier
18 / 16 = 1.125” Bore Diameter

Optional Suffix
N - Narrow Width (Unsealed Only)
Typically .25” Narrower

Sealing
S - Single Seal With Lip Turned In
SS - Double Seal With Both Seal Lips Turned In
RSS – Double Seal With Both Seal Lips Turned Out
RS – Single Seal With Lip Turned Out
SRS – Double Seal With One Lip Turned In And One Lip Turned Out

Optional Suffix
DS - Matched Pair For Duplex Mounting

Inner Ring

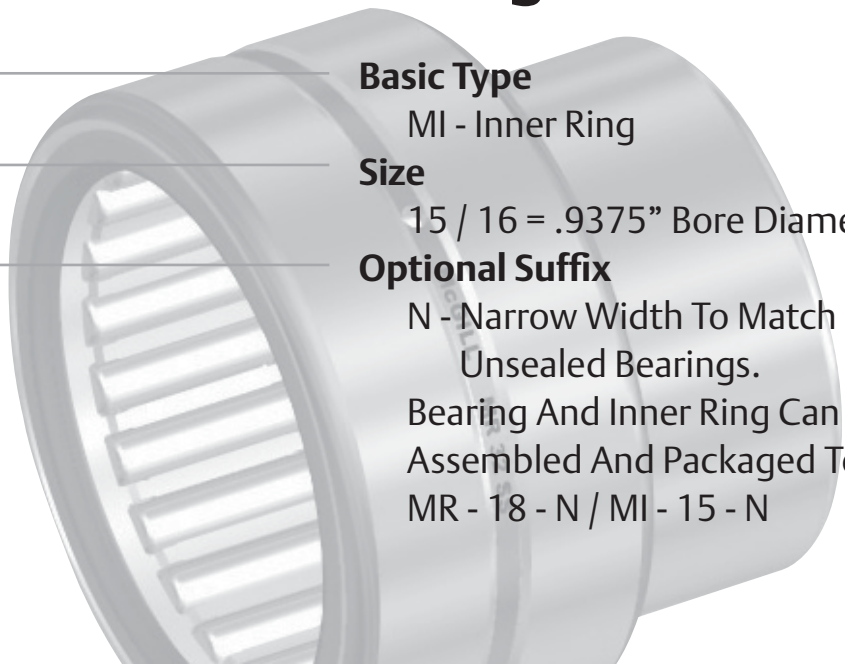

MI 15 N

Basic Type
MI - Inner Ring

Size
15 / 16 = .9375” Bore Diameter

Optional Suffix
N - Narrow Width To Match Narrow Unsealed Bearings.
Bearing And Inner Ring Can Be Assembled And Packaged Together:
MR - 18 - N / MI - 15 - N

Features and Benefits

Machined Outer Race

Race manufactured from bearing quality steel and hardened to carry heavy dynamic and static loads.

Needle Rollers with End Relief (Most Sizes)

Precision Needle Rollers provide high radial load capabilities in small radial envelope dimension. End relief features help reduce raceway stress when shaft misalignment occurs.

Steel Cage

Welded construction minimizes roller radial play for ease of assembly and provides roller guidance helping to reduce friction. The spacing provided by the retainer contributes to the high speed capabilities and lubricant reservoir within the bearing envelope.

Annular Lubrication Groove

The groove provides a circumferential path to direct lubricant to the hole when lubricating through the housing.

Factory Grease Fill

The Sealed CAGEROL bearings are factory lubricated with a medium temperature (-30° to 250°F, -34° to 121° C) NLGI 1 grease, unsealed bearings packaged with light oil film as a rust preventative. Contact Application Engineering when application conditions require special lubricants.

Options

Seals

The rubber lip seal is capable of 250° F maximum temperature and is available in several different configurations.

S

SS

RS

RSS

SRS

"DS" Matched Bearings – Load Sharing

When two bearings are installed with the distance between both bearing less than the width of one bearing, it is recommended the bearings be diametrically matched to prevent unequal load sharing. The option, when applicable matches OD and ID tolerances, diametrical clearance within 30% of the tolerance range and the radial runout within 20% of the tolerance range with high point of runout indicated on the bearing faces. For more information and matching factors please review the engineering section for matched bearings. Matched bearings are packaged as sets.

Machined Inner Ring (MI)

Precision ground inner ring provides a hardened raceway for the rollers when used with an unhardened shaft. The ring contains an oil hole and annular groove for relubrication of the bearing and can be used with both CAGEROL and GUIDEROL bearings or can be utilized as a bushing in plain bearing applications.

Grease Options

When requested, standard bearings can be factory filled with customer specified lubricant.

McGILL® CAGEROL® Bearings

Basic Construction Type: Machined Race with Optional Separable Inner Ring

Rolling Elements: Cage Guided Precision Needles

Bearing Material: Bearing Quality Steel

Seal Type: Rubber Lip

Lubrication: Sealed Bearings: Lithium Soap Grease NLGI #1
Unsealed Bearings: Rust Preventative

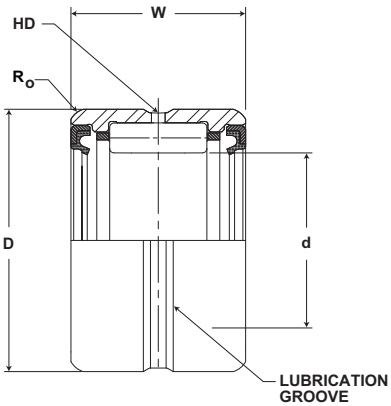

MR SERIES

Part No.		d		D		W	Housing Bore Diameter			HD	Ro	Limiting Speed (In Oil)*	Basic Dynamic Rating	Basic Static Rating	Outer & Roller Assembly Weight
McGill Outer Ring & Roller Assembly	Military No.	Shaft Diameter		Outside Diameter		Width				Radial Lub. Hole Diameter	Max Hsg Radius to Clear				
		inch mm		inch mm		inch mm	inch mm			inch mm		RPM	lb/N	lb/N	lb kg
		Nom	Tol.	Nom	Tol.	Tol +0/-.005 (+0/.13)	Rotating	Stationary	Tol.	(Ref)	(Ref)				
MR 10 N	MS 51961-1 MS 51961-1	.6250 15.9	+0/-.0005 +0/-.013	1.1250 28.6	+0/-.0005 +0/-.013	.750 19.05	1.1247 28.579	1.1257 28.604	+0/-.0007 +0/-.018	.08 2	0.03 1	19250	4,320 19,215	4,300 19,126	.12 .05
							1.1247 28.579	1.1257 28.604	+0/-.0007 +0/-.018	.08 2	0.03 1	19250	4,320 19,215	4,300 19,126	.12 .05
MR 10 SS, S, RS, SRS, RSS						1.000 25.40	1.1247 28.579	1.1257 28.604	+0/-.0007 +0/-.018	.08 2	0.03 1	6100	4,320 19,215	4,300 19,126	.15 .07
MR 10							1.1247 28.579	1.1257 28.604	+0/-.0007 +0/-.018	.08 2	0.03 1	19250	5,930 26,377	6,500 28,912	.15 .07
MR 12 N	MS 51961-2 MS 51961-2	.7500 19.1	+0/-.0005 +0/-.013	1.2500 31.8	+0/-.0005 +0/-.013	.750 19.05	1.2497 31.755	1.2507 31.780	+0/-.0007 +0/-.018	.08 2	0.04 1	16000	4,990 22,196	5,400 24,019	.14 .06
							1.2497 31.755	1.2507 31.780	+0/-.0007 +0/-.018	.08 2	0.04 1	16000	4,990 22,196	5,400 24,019	.14 .06
MR 12 SS, S, RS, SRS, RSS						1.000 25.40	1.2497 31.755	1.2507 31.780	+0/-.0007 +0/-.018	.08 2	0.04 1	5100	4,990 22,196	5,400 24,019	.17 .08
MR 12	MS 51961-3						1.2497 31.755	1.2507 31.780	+0/-.0007 +0/-.018	.08 2	0.04 1	16000	6,830 30,380	8,100 36,029	.17 .08
MR 14 N	MS 51961-5 MS 51961-5	.8750 22.2	+0/-.0005 +0/-.013	1.3750 34.9	+0/-.0005 +0/-.013	.750 19.05	1.3747 34.931	1.3757 34.957	+0/-.0007 +0/-.018	.08 2	0.04 1	13750	5,280 23,485	6,000 26,688	.16 .07
							1.3747 34.931	1.3757 34.957	+0/-.0007 +0/-.018	.08 2	0.04 1	13750	5,280 23,485	6,000 26,688	.16 .07
MR 14 SS, S, RS, SRS, RSS						1.000 25.40	1.3747 34.931	1.3757 34.957	+0/-.0007 +0/-.018	.08 2	0.04 1	4400	5,280 23,485	6,000 26,688	.21 .09
MR 14	MS 51961-6						1.3747 34.931	1.3757 34.957	+0/-.0007 +0/-.018	.08 2	0.04 1	13750	7,240 32,204	9,000 40,032	.21 .09
MR 16 N	MS 51961-8 MS 51961-8	1.0000 25.4	+0/-.0005 +0/-.013	1.5000 38.1	+0/-.0005 +0/-.013	.750 19.05	1.4997 38.107	1.5007 38.133	+0/-.0007 +0/-.018	.08 2	0.04 1	12000	5,840 25,976	7,100 31,581	.20 .09
							1.4997 38.107	1.5007 38.133	+0/-.0007 +0/-.018	.08 2	0.04 1	12000	5,840 25,976	7,100 31,581	.20 .09
MR 16 SS, S, RS, SRS, RSS						1.000 25.40	1.4997 38.107	1.5007 38.133	+0/-.0007 +0/-.018	.08 2	0.04 1	3800	5,840 25,976	7,100 31,581	.23 .10
MR 16	MS 51961-9						1.4997 38.107	1.5007 38.133	+0/-.0007 +0/-.018	.08 2	0.04 1	12000	8,000 35,584	10,600 47,149	.23 .10
MR 18 N	MS 51961-11 MS 51961-11	1.1250 28.6	+0/-.0005 +0/-.013	1.6250 41.3	+0/-.0005 +0/-.013	.750 19.05	1.6247 41.284	1.6257 41.309	+0/-.0007 +0/-.018	.09 2	0.04 1	10700	8,720 38,787	12,200 54,266	.24 .11
							1.6247 41.284	1.6257 41.309	+0/-.0007 +0/-.018	.09 2	0.04 1	10700	8,720 38,787	12,200 54,266	.24 .11
MR 18 SS, S, RS, SRS, RSS						1.000 25.40	1.6247 41.284	1.6257 41.309	+0/-.0007 +0/-.018	.09 2	0.04 1	3400	8,720 38,787	12,200 54,266	.32 .15
MR 18	MS 51961-12						1.6247 41.284	1.6257 41.309	+0/-.0007 +0/-.018	.09 2	0.04 1	10700	10,900 48,483	16,300 72,502	.32 .15
MR 20 N	MS 51961-14	1.2500 31.8	+0/-.0005 +0/-.013	1.7500 44.5	+0/-.0005 +0/-.013	1.000 25.40	1.7497 44.460	1.7507 44.485	+0/-.0007 +0/-.018	.09 2	0.04 1	9600	9,020 40,121	13,100 58,269	.27 .12
MR 20 SS, S, RS, SRS, RSS						1.250 31.75	1.7497 44.460	1.7507 44.485	+0/-.0007 +0/-.018	.09 2	0.04 1	3050	9,020 40,121	13,100 58,269	.34 .15
MR 20	MS 51961-15						1.7497 44.460	1.7507 44.485	+0/-.0007 +0/-.018	.09 2	0.04 1	9600	11,300 50,262	17,500 77,840	.34 .15

Metric dimensions for reference only.
For sealed bearings, Outside diameter may be slightly oversize due to seal press fit.
For DS matching as DS suffix to part number
* For bearing properly filled with #1 grease reduce speed by 50%

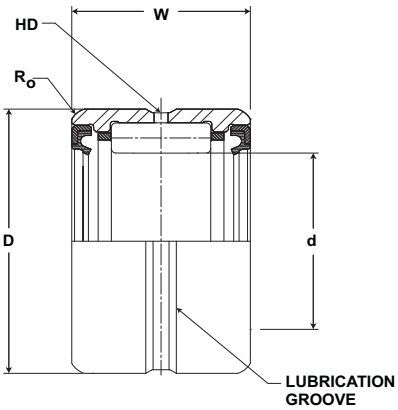

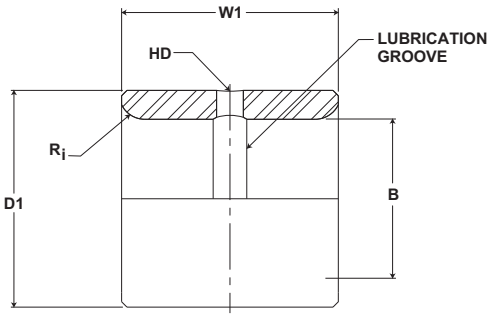

MR SERIES

Part No.		Military No.	B		D1		W1	HD	Ri	Recommended Shaft Diameter with inner ring			Inner Weight
McGill Outer Ring & Roller Assembly	Separable Inner Ring Only		Bore Diameter		Outside Diameter		Width	Radial Lub. Hole Diameter	Max Shaft Radius to Clear				
			inch mm		inch mm		inch mm			inch mm			lb kg
			Nom	Tol.	Nom	Tol.	Tol +0/-.005 (+0/.13)	(Ref)	(Ref)	Rotating	Stationary	Tol.	
MR 10 N	MI 6 N	MS 500072-1	.3750 9.529	+0/-.0004 +0/-.010	.6245 15.9	+0/-.0004 +0/-.010	.760 19.3	.09 2.4	.25 6.4	.3755 9.541	.3747 9.521	+0/-.0005 +0/-.013	.05 .02
	MI 7 N		.4375 11.117	+0/-.0004 +0/-.010	.6245 15.9	+0/-.0004 +0/-.010	.760 19.3	.09 2.4	.25 6.4	.4380 11.130	.4372 11.109	+0/-.0005 +0/-.013	.04 .02
MR 10 SS, S, RS, SRS, RSS	MI 6		.3750 9.529	+0/-.0004 +0/-.010	.6245 15.9	+0/-.0004 +0/-.010	1.010 25.7	.09 2.4	.25 6.4	.3755 9.541	.3747 9.521	+0/-.0005 +0/-.013	.05 .02
MR 10			.3750 9.529	+0/-.0004 +0/-.010	.6245 15.9	+0/-.0004 +0/-.010	1.010 25.7	.09 2.4	.25 6.4	.3755 9.541	.3747 9.521	+0/-.0005 +0/-.013	.05 .02
MR 12 N	MI 8 N	MS 500072-2	.5000 12.705	+0/-.0004 +0/-.010	.7493 19.0	+0/-.0005 +0/-.013	.760 19.3	.13 3.2	.40 10.2	.5005 12.718	.4997 12.697	+0/-.0005 +0/-.013	.04 .02
	MI 9 N		.5625 14.293	+0/-.0004 +0/-.010	.7493 19.0	+0/-.0005 +0/-.013	.760 19.3	.13 3.2	.40 10.2	.5630 14.306	.5623 14.286	+0/-.0005 +0/-.013	.04 .02
MR 12 SS, S, RS, SRS, RSS	MI 8	MS 500072-3	.5000 12.705	+0/-.0004 +0/-.010	.7493 19.0	+0/-.0005 +0/-.013	1.010 25.7	.13 3.2	.40 10.2	.5005 12.718	.4997 12.697	+0/-.0005 +0/-.013	.06 .03
MR 12			.5000 12.705	+0/-.0004 +0/-.010	.7493 19.0	+0/-.0005 +0/-.013	1.010 25.7	.13 3.2	.40 10.2	.5005 12.718	.4997 12.697	+0/-.0005 +0/-.013	.06 .03
MR 14 N	MI 10 N	MS 500072-4	.6250 15.881	+0/-.0004 +0/-.010	.8743 22.2	+0/-.0005 +0/-.013	.760 19.3	.13 3.2	.40 10.2	.6255 15.894	.6247 15.874	+0/-.0005 +0/-.013	.06 .03
	MI 11 N		.6875 17.469	+0/-.0004 +0/-.010	.8743 22.2	+0/-.0005 +0/-.013	.760 19.3	.13 3.2	.40 10.2	.6880 17.482	.6872 17.462	+0/-.0005 +0/-.013	.05 .02
MR 14 SS, S, RS, SRS, RSS	MI 10		.6250 15.881	+0/-.0004 +0/-.010	.8743 22.2	+0/-.0005 +0/-.013	1.010 25.7	.13 3.2	.40 10.2	.6255 15.894	.6247 15.874	+0/-.0005 +0/-.013	.08 .04
MR 14			.6250 15.881	+0/-.0004 +0/-.010	.8743 22.2	+0/-.0005 +0/-.013	1.010 25.7	.13 3.2	.40 10.2	.6255 15.894	.6247 15.874	+0/-.0005 +0/-.013	.08 .04
MR 16 N	MI 12 N	MS 500072-5	.7500 19.058	+0/-.0004 +0/-.010	.9993 25.4	+0/-.0005 +0/-.013	.760 19.3	.13 3.2	.40 10.2	.7505 19.070	.7497 19.050	+0/-.0005 +0/-.013	.07 .03
	MI 13 N	MS 500072-6	.8125 20.646	+0/-.0005 +0/-.013	.9993 25.4	+0/-.0005 +0/-.013	.760 19.3	.13 3.2	.40 10.2	.8130 20.658	.8121 20.638	+0/-.0005 +0/-.013	.07 .03
MR 16 SS, S, RS, SRS, RSS	MI 12		.7500 19.058	+0/-.0004 +0/-.010	.9993 25.4	+0/-.0005 +0/-.013	1.010 25.7	.13 3.2	.40 10.2	.7505 19.070	.7497 19.050	+0/-.0005 +0/-.013	.10 .05
MR 16	MI 13	MS 500072-7	.8125 20.646	+0/-.0005 +0/-.013	.9993 25.4	+0/-.0005 +0/-.013	1.010 25.7	.13 3.2	.40 10.2	.8130 20.658	.8121 20.638	+0/-.0005 +0/-.013	.11 .05
MR 18 N	MI 14 N	MS 500072-8	.8750 22.234	+0/-.0005 +0/-.013	1.124 28.6	+0/-.0005 +0/-.013	1.010 25.7	.13 3.2	.40 10.2	.8755 22.246	.8746 22.226	+0/-.0005 +0/-.013	.11 .05
	MI 15 N	MS 500072-9	.9375 23.822	+0/-.0005 +0/-.013	1.124 28.6	+0/-.0005 +0/-.013	1.010 25.7	.13 3.2	.40 10.2	.9380 23.835	.9371 23.814	+0/-.0005 +0/-.013	.11 .05
MR 18 SS, S, RS, SRS, RSS	MI 14		.8750 22.234	+0/-.0005 +0/-.013	1.124 28.6	+0/-.0005 +0/-.013	1.260 32.0	.13 3.2	.40 10.2	.8755 22.246	.8746 22.226	+0/-.0005 +0/-.013	.13 .06
MR 18			.8750 22.234	+0/-.0005 +0/-.013	1.124 28.6	+0/-.0005 +0/-.013	1.260 32.0	.13 3.2	.40 10.2	.8755 22.246	.8746 22.226	+0/-.0005 +0/-.013	.13 .06
MR 20 N	MI 16 N	MS 500072-10	1.0000 25.410	+0/-.0005 +0/-.013	1.249 31.7	+0/-.0006 +0/-.015	1.010 25.7	.13 3.2	.40 10.2	1.0005 25.423	0.9996 25.402	+0/-.0005 +0/-.013	.13 .06
MR 20 SS, S, RS, SRS, RSS	MI 16		1.0000 25.410	+0/-.0005 +0/-.013	1.249 31.7	+0/-.0006 +0/-.015	1.260 32.0	0.13 3	0.40 10	1.001 25.4	1.000 25.4	+0/-.0005 +0/-.013	.16 .07
MR 20		MS 500072-11	1.0000 25.410	+0/-.0005 +0/-.013	1.249 31.7	+0/-.0006 +0/-.015	1.260 32.0	0.13 3	0.40 10	1.001 25.4	1.000 25.4	+0/-.0005 +0/-.013	.16 .07

Not all parts are available from stock. Please contact customer service for availability (800) 626-2120.
For more information on bearing capabilities outside of our standard offering, please contact Application Engineering (800) 626-2093.

McGILL® CAGEROL® Bearings

Basic Construction Type: Machined Race With Optional Separable Inner Ring

Rolling Elements: Cage Guided Precision Needles

Bearing Material: Bearing Quality Steel

Seal Type: Rubber Lip

Lubrication: Sealed Bearings: Lithium Soap Grease NLGI #1 Unsealed Bearings: Rust Preventative

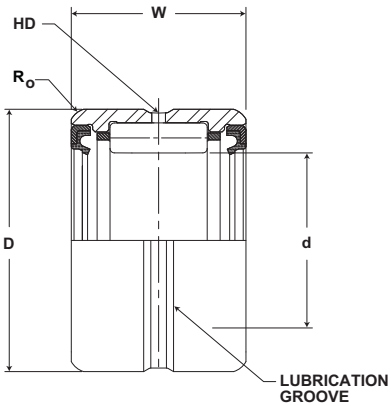

MR SERIES (continued)

Part No.		d		D		W	Housing Bore Diameter			HD	Ro	Limiting Speed (In Oil)*	Basic Dynamic Rating	Basic Static Rating	Outer & Roller Assembly Weight
McGill Outer Ring & Roller Assembly	Military No.	Shaft Diameter		Outside Diameter		Width				Radial Lub. Hole Diameter	Max Hsg Radius to Clear				
		inch mm		inch mm		inch mm	inch mm			inch mm		RPM	lb/N	lb/N	lb kg
		Nom	Tol.	Nom	Tol.	Tol +0/-.005 (+0/.13)	Rotating	Stationary	Tol.	(Ref)	(Ref)				
MR 22 N	MS 51961-18	1.3750 34.9	+0/-.0005 +0/-.013	1.8750 47.6	+0/-.0006 +0/-.015	1.000 25.40	1.8747 47.636	1.8757 47.662	+0/-.0007 +0/-.018	.09 2	0.04 1	8750	9,640 42,879	14,700 65,386	.31 .14
MR 22 SS, S, RS, SRS, RSS						1.250 31.75	1.8747 47.636	1.8757 47.662	+0/-.0007 +0/-.018	.09 2	0.04 1	2800	9,640 42,879	14,700 65,386	.36 .16
MR 22	MS 51961-19						1.8747 47.636	1.8757 47.662	+0/-.0007 +0/-.018	.09 2	0.04 1	8750	12,100 53,821	19,700 87,626	.36 .16
MR 24 N	MS 51961-21	1.5000 38.1	+0/-.0005 +0/-.013	2.0625 52.4	+0/-.0006 +0/-.015	1.000 25.40	2.0621 52.398	2.0632 52.426	+0/-.0007 +0/-.018	.09 2	0.06 2	8000	10,300 45,814	15,500 68,944	.41 .19
MR 24 SS, S, RS, SRS, RSS						1.250 31.75	2.0621 52.398	2.0632 52.426	+0/-.0007 +0/-.018	.09 2	0.06 2	2500	10,300 45,814	15,500 68,944	.47 .21
MR 24	MS 51961-22						2.0621 52.398	2.0632 52.426	+0/-.0007 +0/-.018	.09 2	0.06 2	8000	13,000 57,824	20,800 92,518	.47 .21
MR 26 N	MS 51961-24	1.6250 41.3	+0/-.0005 +0/-.013	2.1875 55.6	+0/-.0006 +0/-.015	1.000 25.40	2.1871 55.574	2.1882 55.602	+0/-.0007 +0/-.018	.09 2	0.06 2	7400	10,600 47,149	16,400 72,947	.46 .21
MR 26 SS, S, RS, SRS, RSS						1.250 31.75	2.1871 55.574	2.1882 55.602	+0/-.0007 +0/-.018	.09 2	0.06 2	2350	10,600 47,149	16,400 72,947	.51 .23
MR 26	MS 51961-25						2.1871 55.574	2.1882 55.602	+0/-.0007 +0/-.018	.09 2	0.06 2	7400	13,300 59,158	22,100 98,301	.51 .23
MR 28 N	MS 51961-27	1.7500 44.5	+0/-.0005 +0/-.013	2.3125 58.8	+0/-.0006 +0/-.015	1.000 25.40	2.3121 58.750	2.3132 58.778	+0/-.0007 +0/-.018	.09 2	0.06 2	6850	11,200 49,818	18,100 80,509	.47 .21
MR 28 SS, S, RS, SRS, RSS						1.250 31.75	2.3121 59	2.3132 59	+0/-.0007 +0/-.018	.09 2	0.06 2	2200	11,200 49,818	18,100 80,509	.55 .25
MR 28	MS 51961-28 MS 51961-28						2.3121 59	2.3132 59	+0/-.0007 +0/-.018	.09 2	0.06 2	6850	14,100 62,717	24,400 108,531	.55 .25
							2.3121 59	2.3132 59	+0/-.0007 +0/-.018	.09 2	0.06 2	6850	14,100 62,717	24,400 108,531	.55 .25
MR 30 SS, S, RS, SRS, RSS		1.8750 47.6	+0/-.0005 +0/-.013	2.4375 61.9	+0/-.0006 +0/-.015	1.250 31.75	2.4371 61.927	2.4382 61.955	+0/-.0007 +0/-.018	.09 2	0.06 2	2040	11,400 50,707	19,000 84,512	.59 .27
MR 30	MS 51961-29						2.4371 62	2.4382 62	+0/-.0007 +0/-.018	.09 2	0.06 2	6400	14,400 64,051	25,600 113,869	.59 .27
MR 31		1.9375 49.2	+0/-.0005 +0/-.013	2.5000 63.5	+0/-.0006 +0/-.015	1.250 31.75	2.4996 63.515	2.5007 63.543	+0/-.0007 +0/-.018	.09 2	0.06 2	6200	12,400 55,155	22,400 99,635	.60 .27
MR 32 N		2.0000 50.8	+0/-.0005 +0/-.013	2.5625 65.1	+0/-.0006 +0/-.015	1.000 25.40	2.5621 65.103	2.5632 65.131	+0/-.0007 +0/-.018	.09 2	0.06 2	6000	12,000 53,376	20,700 92,074	.55 .25
MR 32 SS, S, RS, SRS, RSS						1.250 31.75	2.5621 65	2.5632 65	+0/-.0007 +0/-.018	.09 2	0.06 2	1900	12,000 53,376	20,700 92,074	.61 .28
MR 32	MS 51961-30 MS 51961-30						2.5621 65	2.5632 65	+0/-.0007 +0/-.018	.09 2	0.06 2	6000	15,200 67,610	27,900 124,099	.61 .28
							2.5621 65	2.5632 65	+0/-.0007 +0/-.018	.09 2	0.06 2	6000	15,200 67,610	27,900 124,099	.61 .28
MR 36 N	MS 51961-31	2.2500 57.2	+0/-.0005 +0/-.013	3.0000 76.2	+0/-.0006 +0/-.015	1.500 38.10	2.9996 76.220	3.0007 76.248	+0/-.0007 +0/-.018	.13 3	0.08 2	5350	22,400 99,635	39,100 173,917	1.13 .51
MR 36 SS, S, RS, SRS, RSS						1.750 44.45	2.9996 76	3.0007 76	+0/-.0007 +0/-.018	.13 3	0.08 2	1700	22,400 99,635	39,100 173,917	1.32 .59
MR 36	MS 51961-32						2.9996 76	3.0007 76	+0/-.0007 +0/-.018	.13 3	0.08 2	5350	26,000 115,648	47,400 210,835	1.32 .59

Metric dimensions for reference only.
For sealed bearings, Outside diameter may be slightly oversize due to seal press fit.
For DS matching as DS suffix to part number
* For bearing properly filled with #1 grease reduce speed by 50%

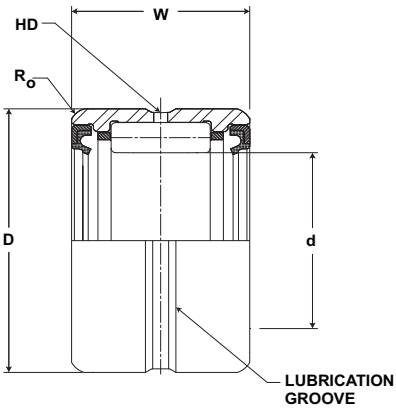

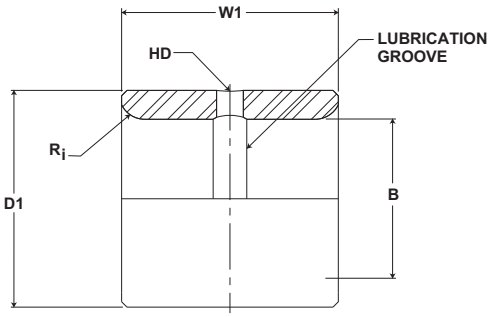

MR SERIES (continued)

Part No.		Military No.	B		D1		W1	HD	Ri	Recommended Shaft Diameter with inner ring			Inner Weight
McGill Outer Ring & Roller Assembly	Separable Inner Ring Only		Bore Diameter		Outside Diameter		Width	Radial Lub. Hole Diameter	Max Shaft Radius to Clear				
			inch mm		inch mm		inch mm			inch mm			lb kg
			Nom	Tol.	Nom	Tol.	Tol +0/-.005 (+0/.13)	(Ref)	(Ref)	Rotating	Stationary	Tol.	
MR 22 N	MI 18 N	MS 500072-12	1.1250 28.586	+0/-.0005 +0/-.013	1.374 34.9	+0/-.0006 +0/-.015	1.010 25.7	.13 3.2	.40 10.2	1.1255 28.599	1.1246 28.579	+0/-.0005 +0/-.013	.14 .06
MR 22 SS, S, RS, SRS, RSS	MI 17		1.0625 26.998	+0/-.0005 +0/-.013	1.374 34.9	+0/-.0006 +0/-.015	1.260 32.0	0.13 3	0.40 10	1.0630 27.011	1.0621 26.991	+0/-.0005 +0/-.013	.16 .07
MR 22	MI 18	MS 500072-13	1.1250 28.586	+0/-.0005 +0/-.013	1.374 34.9	+0/-.0006 +0/-.015	1.260 32.0	0.13 3	0.40 10	1.1255 28.599	1.1246 28.579	+0/-.0005 +0/-.013	.17 .08
MR 24 N	MI 20 N	MS 500072-15	1.2500 31.763	+0/-.0005 +0/-.013	1.499 38.1	+0/-.0006 +0/-.015	1.010 25.7	.13 3.2	.06 1.5	1.2505 31.775	1.2496 31.755	+0/-.0005 +0/-.013	.19 .09
MR 24 SS, S, RS, SRS, RSS	MI 19	MS 500072-16	1.250 31.8	+0/-.0005 +0/-.013	1.499 38.1	+0/-.0006 +0/-.015	1.260 32.0	.13 3.2	.06 1.5	1.2505 31.775	1.2497 31.755	+0/-.0005 +0/-.013	.24 .11
	MI 20	MS 500072-14	1.1875 30.174	+0/-.0005 +0/-.013	1.499 38.1	+0/-.0006 +0/-.015	1.260 32.0	.13 3.2	.06 1.5	1.1880 30.187	1.1871 30.167	+0/-.0005 +0/-.013	.22 .09
MR 26 N	MI 21 N	MS 500072-17	1.3125 33.351	+0/-.0005 +0/-.013	1.624 41.3	+0/-.0006 +0/-.015	1.010 25.7	.13 3.2	.06 1.5	1.3130 33.363	1.3121 33.343	+0/-.0005 +0/-.013	.20 .09
MR 26 SS, S, RS, SRS, RSS	MI 21		1.3125 33.351	+0/-.0005 +0/-.013	1.624 41.3	+0/-.0006 +0/-.015	1.260 32.0	0.13 3	0.06 2	1.3130 33.363	1.3122 33.343	+0/-.0005 +0/-.013	.26 .12
MR 26	MI 22 4S	MS 500072-18	1.3750 34.939	+0/-.0005 +0/-.013	1.624 41.3	+0/-.0006 +0/-.015	1.260 32.0	0.13 3	0.06 2	1.3755 34.951	1.3746 34.931	+0/-.0005 +0/-.013	.20 .09
MR 28 N	MI 24 N	MS 500072-21	1.5000 38.115	+0/-.0005 +0/-.013	1.749 44.4	+0/-.0006 +0/-.015	1.010 25.7	.13 3.2	.06 1.5	1.5005 38.128	1.4996 38.107	+0/-.0005 +0/-.013	.22 .09
MR 28 SS, S, RS, SRS, RSS	MI 22	MS 500072-19	1.3750 34.939	+0/-.0005 +0/-.013	1.749 44.4	+0/-.0006 +0/-.015	1.260 32.0	.13 3.2	.06 1.5	1.3755 34.951	1.3746 34.931	+0/-.0005 +0/-.013	.26 .12
	MI 23	MS 500072-20	1.4375 36.527	+0/-.0005 +0/-.013	1.749 44.4	+0/-.0006 +0/-.015	1.260 32.0	.13 3.2	.06 1.5	1.4380 36.540	1.4371 36.519	+0/-.0005 +0/-.013	.27 .12
	MI 24	MS 500072-22	1.5000 38.115	+0/-.0005 +0/-.013	1.749 44.4	+0/-.0006 +0/-.015	1.260 32.0	.13 3.2	.06 1.5	1.5005 38.128	1.4996 38.107	+0/-.0005 +0/-.013	.22 .09
MR 30 SS, S, RS, SRS, RSS	MI 25 4S		1.5625 39.703	+0/-.0005 +0/-.013	1.874 47.6	+0/-.0006 +0/-.015	1.260 32.0	.13 3.2	0.06 2	1.5630 39.716	1.5621 39.696	+0/-.0005 +0/-.013	.27 .12
MR 30			1.5625 39.703	+0/-.0005 +0/-.013	1.874 47.6	+0/-.0006 +0/-.015	1.260 32.0	.13 3.2	0.06 2	1.5630 39.716	1.5621 39.696	+0/-.0005 +0/-.013	.27 .12
MR 31	MI 26 2S		1.6250 41.291	+0/-.0005 +0/-.013	1.936 49.2	+0/-.0007 +0/-.018	1.260 32.0	.13 3.2	.06 1.5	1.6255 41.304	1.6246 41.284	+0/-.0005 +0/-.013	.30 .14
MR 32 N	MI 26 N		1.6250 41.291	+0/-.0005 +0/-.013	1.999 50.8	+0/-.0007 +0/-.018	1.010 25.7	.13 3.2	.06 1.5	1.6255 41.304	1.6246 41.284	+0/-.0005 +0/-.013	.30 .14
MR 32 SS, S, RS, SRS, RSS	MI 25		1.5625 39.703	+0/-.0005 +0/-.013	1.999 50.8	+0/-.0007 +0/-.018	1.260 32.0	.13 3.2	.06 1.5	1.5630 39.716	1.5621 39.696	+0/-.0005 +0/-.013	.30 .14
MR 32	MI 26	MS 500072-23	1.6250 41.291	+0/-.0005 +0/-.013	1.999 50.8	+0/-.0007 +0/-.018	1.260 32.0	.13 3.2	.06 1.5	1.6255 41.304	1.6246 41.284	+0/-.0005 +0/-.013	.38 .17
	MI 27		1.6875 42.879	+0/-.0005 +0/-.013	1.999 50.8	+0/-.0007 +0/-.018	1.260 32.0	.13 3.2	.06 1.5	1.6880 42.892	1.6871 42.872	+0/-.0005 +0/-.013	.32 .15
MR 36 N	MI 28 N	MS 500072-24	1.7500 44.468	+0/-.0005 +0/-.013	2.249 57.1	+0/-.0007 +0/-.018	1.510 38.4	.19 4.8	.06 1.5	1.7505 44.480	1.7496 44.460	+0/-.0005 +0/-.013	.63 .29
MR 36 SS, S, RS, SRS, RSS	MI 28	MS 500072-25	1.750 44.5	+0/-.0005 +0/-.013	2.249 57.1	+0/-.0007 +0/-.018	1.760 44.7	0.19 5	0.06 2	1.7505 44.480	1.7497 44.460	+0/-.0005 +0/-.013	.74 .34
	MI 30		1.8750 47.644	+0/-.0005 +0/-.013	2.249 57.1	+0/-.0007 +0/-.018	1.760 44.7	0.19 5	0.06 2	1.8755 47.656	1.8746 47.636	+0/-.0005 +0/-.013	.85 .39

Not all parts are available from stock. Please contact customer service for availability (800) 626-2120.
For more information on bearing capabilities outside of our standard offering, please contact Application Engineering (800) 626-2093.

Basic Construction Type: Machined Race With Optional Separable Inner Ring

Rolling Elements: Cage Guided Precision Needles

Bearing Material: Bearing Quality Steel

Seal Type: Rubber Lip

Lubrication: Sealed Bearings: Lithium Soap Grease NLGI #1 Unsealed Bearings: Rust Preventative

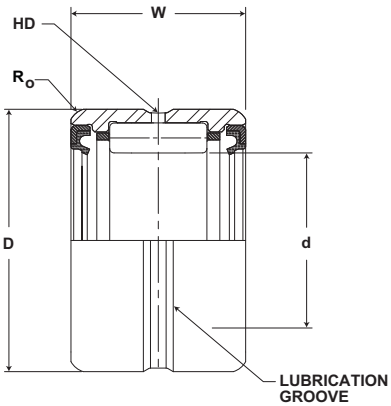

MR SERIES (continued)

Part No.		d		D		W	Housing Bore Diameter			HD	Ro	Limiting Speed (In Oil)*	Basic Dynamic Rating	Basic Static Rating	Outer & Roller Assembly Weight
McGill Outer Ring & Roller Assembly	Military No.	Shaft Diameter		Outside Diameter		Width				Radial Lub. Hole Diameter	Max Hsg Radius to Clear				
		inch mm		inch mm		inch mm	inch mm			inch mm		RPM	lb/N	lb/N	lb kg
		Nom	Tol.	Nom	Tol.	Tol +0/-.005 (+0/.13)	Rotating	Stationary	Tol.	(Ref)	(Ref)				
MR 40 N	MS 51961-33	2.5000 63.5	+0/-.0005 +0/-.013	3.2500 82.6	+0/-.0008 +0/-.020	1.500 38.10	3.2496 82.572	3.2507 82.600	+0/-.0007 +0/-.018	.13 3	0.08 2	4800	23,400 104,083	42,900 190,819	1.23 .56
MR 40 SS, S, RS, SRS, RSS						1.750 44.45	3.2496 83	3.2507 83	+0/-.0007 +0/-.018	.13 3	0.08 2	1530	23,400 104,083	42,900 190,819	1.44 .65
MR 40	MS 51961-34						3.2496 83	3.2507 83	+0/-.0007 +0/-.018	.13 3	0.08 2	4800	27,200 120,986	52,100 231,741	1.44 .65
MR 40	MS 51961-34						3.2496 83	3.2507 83	+0/-.0007 +0/-.018	.13 3	0.08 2	4800	27,200 120,986	52,100 231,741	1.44 .65
MR 44 N	MS 51961-35	2.7500 69.9	+0/-.0005 +0/-.013	3.5000 88.9	+0/-.0008 +0/-.020	1.500 38.10	3.4995 89	3.5008 89	+0/-.0010 +0/-.025	.13 3	0.08 2	4370	24,500 108,976	46,700 207,722	1.36 .62
MR 44 SS, S, RS, SRS, RSS						1.750 44.45	3.4995 89	3.5008 89	+0/-.0010 +0/-.025	.13 3	0.08 2	1390	24,500 108,976	46,700 207,722	1.59 .72
MR 44	MS 51961-36						3.4995 89	3.5008 89	+0/-.0010 +0/-.025	.13 3	0.08 2	4370	28,400 126,323	56,700 252,202	1.59 .72
MR 48 N	MS 51961-37	3.0000 76.2	+0/-.0005 +0/-.013	3.7500 95.3	+0/-.0008 +0/-.020	1.500 38.10	3.7495 95.275	3.7508 95.308	+0/-.0010 +0/-.025	.13 3	0.08 2	4000	26,100 116,093	52,300 232,630	1.53 .69
MR 48 SS, S, RS, SRS, RSS						1.750 44.45	3.7495 95	3.7508 95	+0/-.0010 +0/-.025	.13 3	0.08 2	1270	26,100 116,093	52,300 232,630	1.79 .77
MR 48	MS 51961-38 MS 51961-38						3.7495 95	3.7508 95	+0/-.0010 +0/-.025	.13 3	0.08 2	4000	30,300 134,774	63,400 282,003	1.79 .77
							3.7495 95	3.7508 95	+0/-.0010 +0/-.025	.13 3	0.08 2	4000	30,300 134,774	63,400 282,003	1.79 .77
† MR 52 SS, S, RS, SRS, RSS		3.2500 82.6	+0/-.0005 +0/-.013	4.2500 108.0	+0/-.0008 +0/-.020	1.750 44.45	4.2495 107	4.2508 108	+0/-.0010 +0/-.025	.19 5	0.08 2	1175	25,100 111,645	54,300 241,526	2.64 1.19
MR 52	MS 51961-39						4.2495 108	4.2508 108	+0/-.0010 +0/-.025	.19 5	0.08 2	3700	29,900 132,995	64,400 286,451	2.64 1.19
MR 56 N	MS 51961-41	3.5000 88.9	+0/-.0005 +0/-.013	4.5000 114.3	+0/-.0008 +0/-.020	1.750 44.45	4.4995 114	4.5008 114	+0/-.0010 +0/-.025	.19 5	0.08 2	3440	31,300 139,222	71,600 318,477	2.88 1.31
MR 56 SS, S, RS, SRS, RSS						2.000 50.80	4.4995 114	4.5008 114	+0/-.0010 +0/-.025	.19 5	0.08 2	1090	31,300 139,222	71,600 318,477	3.18 1.44
MR 56	MS 51961-42 MS 51961-42						4.4995 114	4.5008 114	+0/-.0010 +0/-.025	.19 5	0.08 2	3440	35,900 159,683	83,500 371,408	3.18 1.44
							4.4995 114	4.5008 114	+0/-.0010 +0/-.025	.19 5	0.08 2	3440	35,900 159,683	83,500 371,408	3.18 1.44
† MR 60 SS, S, RS, SRS, RSS		3.7500 95.3	+0/-.0005 +0/-.013	4.7500 120.7	+0/-.0008 +0/-.020	2.000 50.80	4.7495 121	4.7508 121	+0/-.0010 +0/-.025	.19 5	0.10 3	1020	31,600 140,557	74,700 332,266	3.38 1.53
MR 60	MS 51961-43						4.7495 121	4.7508 121	+0/-.0010 +0/-.025	.19 5	0.10 3	3200	36,500 162,352	87,100 387,421	3.38 1.53
† MR 64 SS, S, RS, SRS, RSS		4.0000 101.6	+0/-.0007 +0/-.018	5.0000 127.1	+0/-.0010 +0/-.025	2.000 50.80	4.9999 127	5.0011 127	+0/-.0015 +0/-.038	.19 5	0.10 3	950	32,000 142,336	80,400 357,619	3.56 1.61
MR 64	MS 51961-45						4.9999 127	5.0011 127	+0/-.0015 +0/-.038	.19 5	0.10 3	3000	38,000 169,024	93,800 417,222	3.56 1.61

For sealed bearings, Outside diameter may be slightly oversize due to seal press fit.
For DS matching as DS suffix to part number
* For bearing properly filled with #1 grease reduce speed by 50%
† Not available from stock. Consult McGill customer service for availability.

Metric dimensions for reference only.
Not all parts are available from stock. Please contact customer service for availability (800) 626-2120.
For more information on bearing capabilities outside of our standard offering, please contact Application Engineering (800) 626-2093.

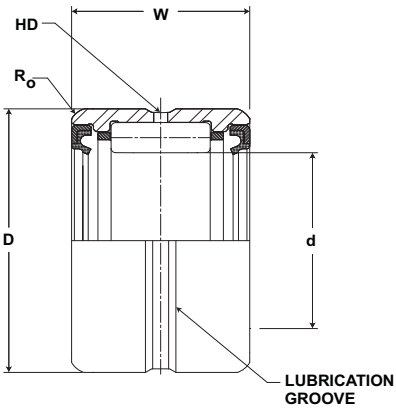

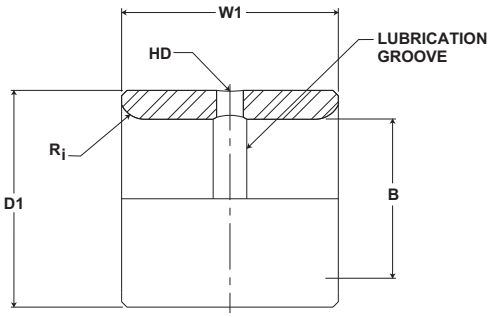

MR SERIES (continued)

Part No.		Military No.	B		D1		W1	HD	Ri	Recommended Shaft Diameter with inner ring			Inner Weight
McGill Outer Ring & Roller Assembly	Separable Inner Ring Only		Bore Diameter		Outside Diameter		Width	Radial Lub. Hole Diameter	Max Shaft Radius to Clear				
			inch mm		inch mm		inch mm			inch mm			lb kg
			Nom	Tol.	Nom	Tol.	Tol +0/-.005 (+0/.13)	(Ref)	(Ref)	Rotating	Stationary	Tol.	
MR 40 N	MI 32 N	MS 500072-27	2.0000 50.820	+0/-.0005 +0/-.013	2.249 57.1	+0/-.0007 +0/-.018	1.510 38.4	.19 4.8	.08 2.0	2.0005 50.833	1.9996 50.812	+0/-.0005 +0/-.013	.74 .34
MR 40 SS, S, RS, SRS, RSS	MI 31	MS 500072-26	1.9375 49.232	+0/-.0005 +0/-.013	2.249 57.1	+0/-.0007 +0/-.018	1.510 38.4	.19 4.8	.08 2.0	1.9380 49.245	1.9371 49.224	+0/-.0005 +0/-.013	.97 .44
	MI 32		2.0000 50.820	+0/-.0005 +0/-.013	2.249 57.1	+0/-.0007 +0/-.018	1.760 44.7	.19 4.8	.08 2.0	2.0005 50.833	1.9996 50.812	+0/-.0005 +0/-.013	.87 .39
	MI 34		2.1250 53.996	+0/-.0006 +0/-.015	2.249 57.1	+0/-.0007 +0/-.018	1.760 44.7	.19 4.8	.08 2.0	2.1258 54.017	2.1247 53.989	+0/-.0008 +0/-.020	1.00 .45
MR 44 N	MI 36 N	MS 500072-29	2.2500 57.173	+0/-.0006 +0/-.015	2.749 69.8	+0/-.0007 +0/-.018	1.510 38.4	.19 4.8	.08 2.0	2.2508 57.193	2.2497 57.165	+0/-.0008 +0/-.020	.83 .37
MR 44 SS, S, RS, SRS, RSS	MI 35	MS 500072-28	2.1875 55.584	+0/-.0006 +0/-.015	2.749 69.8	+0/-.0007 +0/-.018	1.510 38.4	0.19 5	0.08 2	2.1883 55.605	2.1872 55.577	+0/-.0008 +0/-.020	1.06 .48
	MI 36		2.2500 57.173	+0/-.0006 +0/-.015	2.749 69.8	+0/-.0007 +0/-.018	1.760 44.72	0.19 5	0.08 2	2.2508 57.193	2.2497 57.165	+0/-.0008 +0/-.020	.97 .44
MR 48 N	MI 40 N	MS 500072-31	2.5000 63.525	+0/-.0006 +0/-.015	2.9989 76.202	+0/-.0007 +0/-.018	1.510 38.37	.19 4.8	.08 2.0	2.5008 63.545	2.4997 63.517	+0/-.0008 +0/-.020	.92 .43
MR 48 SS, S, RS, SRS, RSS	MI 38	MS 500072-30	2.3750 60.349	+0/-.0006 +0/-.015	2.9989 76.202	+0/-.0007 +0/-.018	1.760 44.72	.19 4.8	.08 2.0	2.3758 60.369	2.3747 60.341	+0/-.0008 +0/-.020	1.28 .58
	MI 39		2.4375 61.937	+0/-.0006 +0/-.015	2.9989 76.202	+0/-.0007 +0/-.018	1.510 38.37	.19 4.8	.08 2.0	2.4383 61.957	2.4372 61.929	+0/-.0008 +0/-.020	1.05 .47
	MI 40		2.5000 63.525	+0/-.0006 +0/-.015	2.9989 76.202	+0/-.0007 +0/-.018	1.760 44.72	.19 4.8	.08 2.0	2.5008 63.545	2.4997 63.517	+0/-.0008 +0/-.020	1.07 .48
† MR 52 SS, S, RS, SRS, RSS	MI 42		2.6250 66.701	+0/-.0006 +0/-.015	3.2487 82.549	+0/-.0009 +0/-.023	1.760 44.72	.19 4.8	0.08 2	2.6258 66.722	2.6247 66.694	+0/-.0008 +0/-.020	1.12 .51
MR 52	MI 44	MS 500072-32	2.7500 69.878	+0/-.0006 +0/-.015	3.2487 82.549	+0/-.0009 +0/-.023	1.760 44.72	0.19 5	0.08 2	2.7508 69.898	2.7497 69.870	+0/-.0008 +0/-.020	1.17 .53
MR 56 N	MI 48 N		3.0000 76.230	+0/-.0006 +0/-.015	3.4987 88.902	+0/-.0009 +0/-.023	1.760 44.72	.25 6.4	.08 2.0	3.0008 76.250	2.9997 76.222	+0/-.0008 +0/-.020	1.32 .59
MR 56 SS, S, RS, SRS, RSS	MI 46		2.8750 73.054	+0/-.0006 +0/-.015	3.4987 88.902	+0/-.0009 +0/-.023	2.010 51.07	0.25 6	0.08 2	2.8758 73.074	2.8747 73.046	+0/-.0008 +0/-.020	1.30 .59
MR 56	MI 47	MS 500072-34	2.9375 74.642	+0/-.0006 +0/-.015	3.4987 88.902	+0/-.0009 +0/-.023	2.010 51.07	0.25 6	0.08 2	2.9383 74.662	2.9372 74.634	+0/-.0008 +0/-.020	1.58 .72
	MI 48		3.0000 76.230	+0/-.0006 +0/-.015	3.4987 88.902	+0/-.0009 +0/-.023	2.010 51.07	0.25 6	0.08 2	3.0008 76.250	2.9997 76.222	+0/-.0008 +0/-.020	1.43 .65
† MR 60 SS, S, RS, SRS, RSS	MI 50	MS 500072-35	3.1250 79.406	+0/-.0006 +0/-.015	3.7487 95.254	+0/-.0009 +0/-.023	2.010 51.07	.25 6.4	.10 2.5	3.1260 79.432	3.1246 79.396	+0/-.0010 +0/-.025	1.88 .85
	MI 52	MS 500072-36	3.2500 82.583	+0/-.0006 +0/-.015	3.7487 95.254	+0/-.0009 +0/-.023	2.010 51.07	0.25 6.4	0.10 2.5	3.2510 82.608	3.2496 82.572	+0/-.0010 +0/-.025	1.52 .69
† MR 64 SS, S, RS, SRS, RSS	MI 54	MS 500072-38	3.3750 85.759	+0/-.0008 +0/-.020	3.9985 101.602	+0/-.0009 +0/-.023	2.010 51.07	.25 6.4	.10 2.5	3.3760 85.784	3.3746 85.749	+0/-.0010 +0/-.025	2.04 .93
	MI 56		3.5000 88.935	+0/-.0008 +0/-.020	3.9985 101.602	+0/-.0009 +0/-.023	2.010 51.07	0.25 6.4	0.10 2.5	3.5010 88.960	3.4996 88.925	+0/-.0010 +0/-.025	1.63 .74

† Not available from stock. Consult McGill customer service for availability.

Basic Construction Type: Machined Race With Optional Separable Inner Ring

Rolling Elements: Cage Guided Precision Needles

Bearing Material: Bearing Quality Steel

Seal Type: Rubber Lip

Lubrication: Sealed Bearings: Lithium Soap Grease NLGI #1 Unsealed Bearings: Rust Preventative

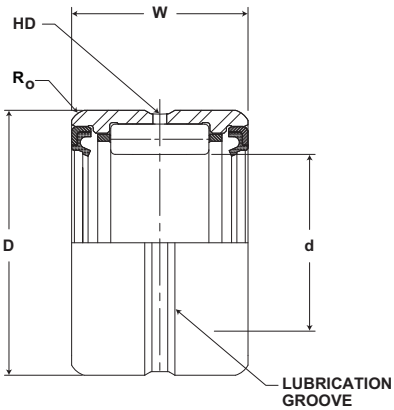

MR SERIES (continued)

Part No.		d		D		W	Housing Bore Diameter			HD	Ro	Limiting Speed (In Oil)*	Basic Dynamic Rating	Basic Static Rating	Outer & Roller Assembly Weight
McGill Outer Ring & Roller Assembly	Military No.	Shaft Diameter		Outside Diameter		Width				Radial Lub. Hole Diameter	Max Hsg Radius to Clear				
		inch mm		inch mm		inch mm	inch mm			inch mm		RPM	lb/N	lb/N	lb kg
		Nom	Tol.	Nom	Tol.	Tol +0/-.005 (+0/.13)	Rotating	Stationary	Tol.	(Ref)	(Ref)				
† MR 68 SS, S, RS, SRS, RSS		4.2500 108.0	+0/-.0007 +0/-.018	5.2500 133.4	+0/-.0010 +0/-.025	2.000 50.80	5.2499 133	5.2511 133	+0/-.0015 +0/-.038	.19 5	0.10 3	900	34,000 151,232	86,200 383,418	3.74 1.69
MR 68	MS 51961-46						5.2499 133	5.2511 133	+0/-.0015 +0/-.038	.19 5	0.10 3	2820	39,500 175,696	101,000 449,248	3.74 1.69
MR 72	MS 51961-48	4.5000 114.3	+0/-.0007 +0/-.018	6.0000 152.5	+0/-.0010 +0/-.025	2.250 57.15	5.9999 152	6.0011 152	+0/-.0015 +0/-.038	.19 5	0.10 3	2660	60,300 268,214	130,000 578,240	7.13 3.23
MR 80		5.0000 127.1	+0/-.0007 +0/-.018	6.5000 165.2	+0/-.0010 +0/-.025	2.250 57.15	6.4999 165	6.5011 165	+0/-.0015 +0/-.038	.19 5	0.10 3	800	64,600 287,341	148,000 658,304	7.78 3.53
MR 88 N	MS 51961-52	5.5000 139.8	+0/-.0007 +0/-.018	7.0000 177.9	+0/-.0010 +0/-.025	2.500 63.50	6.9999 178	7.0011 178	+0/-.0015 +0/-.038	.25 6	0.10 3	2180	70,200 312,250	169,800 755,270	10.40 4.72
MR 88	MS 51961-53					3.000 76.20	6.9999 178	7.0011 178	+0/-.0015 +0/-.038	.25 6	0.10 3	2180	85,700 381,194	222,000 987,456	11.82 5.36
MR 96 N	MS 51961-55	6.0000 152.5	+0/-.0010 +0/-.025	7.5000 190.6	+0/-.0012 +0/-.030	2.500 63.50	7.4998 190	7.5011 190	+0/-.0015 +0/-.038	.25 6	0.12 3	2000	71,000 315,808	177,000 787,296	11.08 5.02
MR 96	MS 51961-56					3.000 76.20	7.4998 190	7.5011 190	+0/-.0015 +0/-.038	.25 6	0.12 3	2000	86,600 385,197	228,000 1,014,144	12.69 5.76
MR 104 N	MS 51961-57	6.5000 165.2	+0/-.0010 +0/-.025	8.0000 203.3	+0/-.0012 +0/-.030	2.500 63.50	7.9998 203	8.0011 203	+0/-.0015 +0/-.038	.25 6	0.12 3	1850	71,700 318,922	183,000 813,984	11.85 5.37
† MR 104	MS 51961-58					3.000 76.20	7.9998 203	8.0011 203	+0/-.0015 +0/-.038	.25 6	0.12 3	1850	87,500 389,200	237,000 1,054,176	13.55 6.15
MR 116	MS 51961-59	7.2500 184.2	+0/-.0010 +0/-.025	9.1250 231.9	+0/-.0012 +0/-.030	3.000 76.20	9.1248 231	9.1261 231	+0/-.0015 +0/-.038	.25 6	0.12 3	1680	95,200 423,450	234,000 1,040,832	19.32 8.76
† MR 124		7.7500 196.9	+0/-.0010 +0/-.025	9.6250 244.6	+0/-.0012 +0/-.030	3.000 76.20	9.6250 244	9.6265 244	+0/-.0020 +0/-.051	.25 6	0.12 3	1530	99,100 440,797	252,000 1,120,896	19.80 8.97
† MR 132		8.2500 209.6	+0/-.0010 +0/-.025	10.1250 257.3	+0/-.0012 +0/-.030	3.000 76.20	10.1250 257	10.1265 257	+0/-.0020 +0/-.051	.25 6	0.12 3	1460	103,000 458,144	270,000 1,200,960	21.63 9.81
† MR 140		8.7500 222.3	+0/-.0010 +0/-.025	10.6250 270.0	+0/-.0014 +0/-.036	3.000 76.20	10.6250 269	10.6265 270	+0/-.0020 +0/-.051	.25 6	0.16 4	1370	104,000 462,592	280,000 1,245,440	22.73 10.31
MR 148		9.2500 235.0	+0/-.0010 +0/-.025	11.1250 282.7	+0/-.0014 +0/-.036	3.000 76.20	11.1250 282	11.1265 282	+0/-.0020 +0/-.051	.25 6	0.16 4	1300	108,000 480,384	292,000 1,298,816	24.90 10.88

For sealed bearings, Outside diameter may be slightly oversize due to seal press fit.
For DS matching as DS suffix to part number
* For bearing properly filled with #1 grease reduce speed by 50%
† Not available from stock. Consult McGill customer service for availability.

Metric dimensions for reference only.
Not all parts are available from stock. Please contact customer service for availability (800) 626-2120.
For more information on bearing capabilities outside of our standard offering, please contact Application Engineering (800) 626-2093.

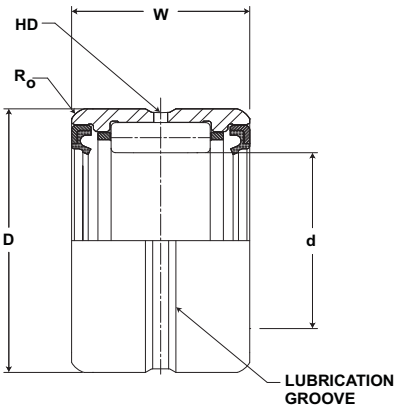

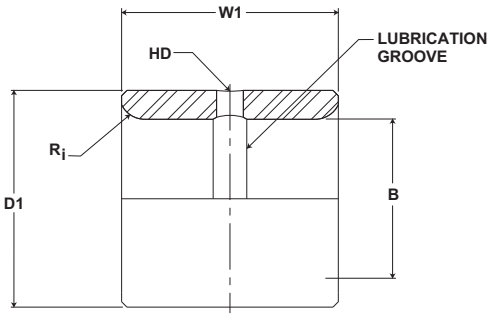

MR SERIES (continued)

Part No.		Military No.	B		D1		W1	HD	Ri	Recommended Shaft Diameter with inner ring			Inner Weight
McGill Outer Ring & Roller Assembly	Separable Inner Ring Only		Bore Diameter		Outside Diameter		Width	Radial Lub. Hole Diameter	Max Shaft Radius to Clear				
			inch mm		inch mm		inch mm			inch mm			lb kg
			Nom	Tol.	Nom	Tol.	Tol +0/-.005 (+0/.13)	(Ref)	(Ref)	Rotating	Stationary	Tol.	
† MR 68 SS, S, RS, SRS, RSS	MI 58		3.6250 92.111	+0/-.0008 +0/-.020	4.2485 107.954	+0/-.0009 +0/-.023	2.010 51.07	.25 6.4	0.10 3	3.6260 92.137	3.6246 92.101	+0/-.0010 +0/-.025	1.70 .77
MR 68	MI 60	MS 500072-40	3.7500 95.288	+0/-.0008 +0/-.020	4.2485 107.954	+0/-.0009 +0/-.023	2.010 51.07	0.25 6	0.10 3	3.7510 95.313	3.7496 95.277	+0/-.0010 +0/-.025	1.75 .79
MR 72	MI 62		3.8750 98.464	+0/-.0008 +0/-.020	4.4985 114.307	+0/-.0009 +0/-.023	2.260 57.43	.25 6.4	.10 2.5	3.8760 98.489	3.8746 98.454	+0/-.0010 +0/-.025	3.25 1.47
MR 80	MI 64		4.0000 101.640	+0/-.0008 +0/-.020	4.9985 127.012	+0/-.0010 +0/-.025	2.260 57.43	.25 6.4	0.10 3	4.0010 101.665	3.9996 101.630	+0/-.0010 +0/-.025	4.38 1.99
	MI 68		4.2500 107.993	+0/-.0008 +0/-.020	4.9985 127.012	+0/-.0010 +0/-.025	2.260 57.43	0.25 6	0.10 3	4.2510 108.018	4.2496 107.982	+0/-.0010 +0/-.025	5.24 2.37
MR 88 N	MI 72 N	MS 500072-43	4.5000 114.345	+0/-.0008 +0/-.020	5.4985 139.717	+0/-.0010 +0/-.025	2.515 63.91	.25 6.4	0.10 3	4.5010 114.370	4.4996 114.332	+0/-.0010 +0/-.025	5.43 2.47
MR 88	MI 72	MS 500072-44	4.5000 114.345	+0/-.0008 +0/-.020	5.4985 139.717	+0/-.0010 +0/-.025	3.015 76.61	0.25 6	0.10 3	4.5010 114.370	4.4995 114.332	+0/-.0010 +0/-.025	5.97 2.71
MR 96 N	MI 80 N	MS 500072-46	5.0000 127.050	+0/-.0010 +0/-.025	5.9983 152.417	+0/-.0010 +0/-.025	2.515 63.91	.31 7.9	0.12 3	5.0010 127.075	4.9995 127.037	+0/-.0010 +0/-.025	5.97 2.71
MR 96	MI 80	MS 500072-47	5.0000 127.050	+0/-.0010 +0/-.025	5.9983 152.417	+0/-.0010 +0/-.025	3.015 76.61	0.31 8	0.12 3	5.0010 127.075	4.9995 127.037	+0/-.0010 +0/-.025	7.12 3.23
MR 104 N	MI 88 N	MS 500072-48	5.5000 139.755	+0/-.0010 +0/-.025	6.4983 165.122	+0/-.0010 +0/-.025	2.515 63.91	.31 7.9	0.12 3	5.5010 139.780	5.4995 139.742	+0/-.0010 +0/-.025	6.30 2.88
† MR 104	MI 88	MS 500072-49	5.5000 139.755	+0/-.0010 +0/-.025	6.4983 165.122	+0/-.0010 +0/-.025	3.015 76.61	0.31 8	0.12 3	5.5010 139.780	5.4995 139.742	+0/-.0010 +0/-.025	7.56 3.43
MR 116	MI 96	MS 500072-50	6.0000 152.460	+0/-.0010 +0/-.025	7.2481 184.174	+0/-.0012 +0/-.030	3.015 76.61	.31 7.9	.12 3.0	6.0012 152.490	5.9995 152.447	+0/-.0012 +0/-.030	11.06 5.03
† MR 124	MI 104		6.5000 165.165	+0/-.0010 +0/-.025	7.7481 196.879	+0/-.0012 +0/-.030	3.015 76.61	.31 7.9	.12 3.0	6.5012 165.195	6.4995 165.152	+0/-.0012 +0/-.030	11.99 5.39
† MR 132	MI 112		7.0000 177.870	+0/-.0010 +0/-.025	8.2481 209.584	+0/-.0012 +0/-.030	3.015 76.61	.31 7.9	.12 3.0	7.0012 177.900	6.9995 177.857	+0/-.0012 +0/-.030	12.70 5.77
† MR 140	MI 120		7.5000 190.575	+0/-.0012 +0/-.030	8.7480 222.287	+0/-.0012 +0/-.030	3.015 76.61	.31 7.9	.16 4.1	7.5012 190.605	7.4995 190.562	+0/-.0012 +0/-.030	13.60 6.17
† MR 148	MI 128		8.0000 203.280	+0/-.0012 +0/-.030	9.2480 234.992	+0/-.0012 +0/-.030	3.015 76.61	.31 7.9	.16 4.1	8.0012 203.310	7.9995 203.267	+0/-.0012 +0/-.030	14.40 6.55

† Not available from stock. Consult McGill customer service for availability.

McGill GUIDEROL® Bearings

McGill GUIDEROL® machined race full complement needle bearings are manufactured from bearing quality steel with unique roller and race design to provide center-guided rolling elements for higher radial load capacity and is well suited for oscillating applications. GUIDEROL® bearings are constructed with radial lubrication hole and groove on the outer and optional inner raceway (MI-series) for relubrication through the housing or shaft. Other options include a variety of seal configurations to either help prevent contaminant entry or contain the lubricant. Depending on your preference, these bearings are available in a wide variety of sizes and sealing options as illustrated on the pages to follow.

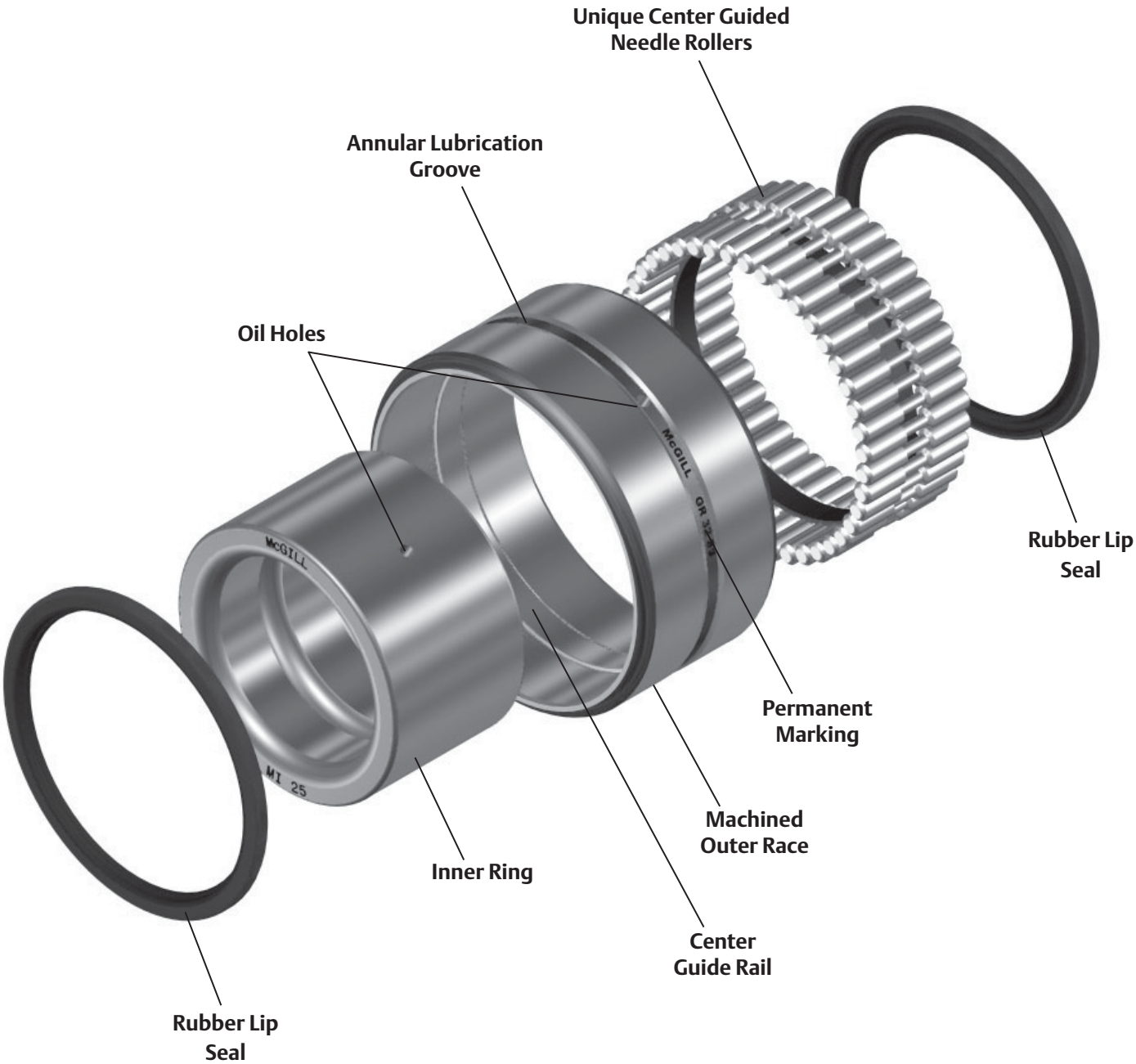

GUIDEROL® Nomenclature

Basic Type
GR - GUIDEROL® Bearing

Series Identifier
18 / 16 = 1.125” Bore Diameter

Optional Suffix
N - Narrow Width (Unsealed Only)
Typically .25” Narrower

Sealing
S - Single Seal With Lip Turned In
SS - Double Seal With Both Seal Lips Turned In
RSS – Double Seal With Both Seal Lips Turned Out
RS – Single Seal With Lip Turned Out
SRS – Double Seal With One Lip Turned In And One Lip Turned Out

Optional Suffix
DS - Matched Pair For Duplex Mounting

GR 18 N S DS

Inner Ring

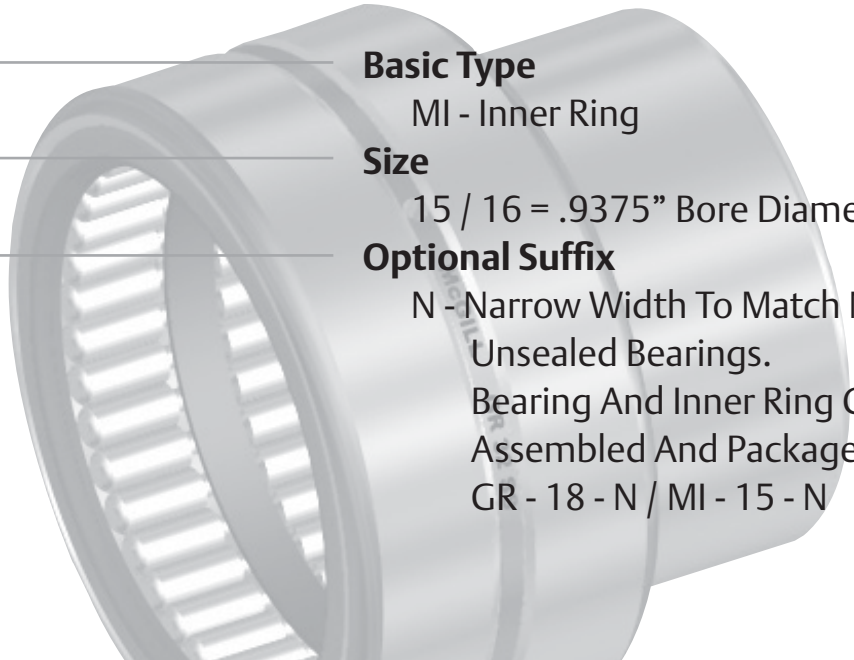

Basic Type
MI - Inner Ring

Size
15 / 16 = .9375” Bore Diameter

Optional Suffix
N - Narrow Width To Match Narrow Unsealed Bearings.
Bearing And Inner Ring Can Be Assembled And Packaged Together:
GR - 18 - N / MI - 15 - N

MI 15 N

Features and Benefits

Machined Outer Race

Race manufactured from bearing quality steel and hardened to carry heavy dynamic and static loads.

Unique Center Guided Needle Rollers

Centered guided rollers designed to fit a mating guide rail and allow for maximum width of roller within the bearing.

Retaining Ring and Center Rail

Provides retention of needle rollers and helps guide rollers to prevent skewing.

Annular Lubrication Groove

The groove provides a circumferential path to direct lubricant to the oil hole, when lubricating through the housing.

Factory Grease Fill

The sealed GUIDEROL® bearings are factory lubricated with a medium temperature (-30° to 250°F, -34° to 121° C) NLGI 1 grease, unsealed bearings packaged with light oil film as a rust preventative. Contact Application Engineering when application conditions require special lubricants.

Options

Seals

The rubber lip seal is capable of 250° F maximum temperature and is available in several different configurations on bearings capable being sealed.

S

SS

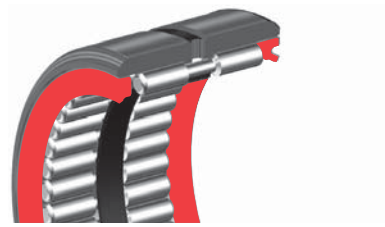

RS

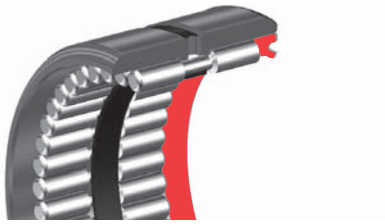

RSS

SRS

"DS" Matched Bearings – Load Sharing

When two bearings are installed with the distance between both bearing less than the width of one bearing, it is recommended the bearings be diametrically matched to prevent unequal load sharing. The option matches OD and ID tolerances, diametrical clearance within 30% of the tolerance range and the radial runout within 20% of the tolerance range with high point of runout indicated on the bearing faces. For more information and matching factors please review the engineering section for matched bearings. Matched bearings are packaged as sets, but can be used individually if desired.

Machined Inner Ring (MI)

Precision ground inner ring provides a hardened raceway for the rollers when used with an unhardened shaft. The ring contains an oil hole and annular groove for relubrication of the bearing and can be used with both CAGEROL and GUIDEROL bearings or can be utilized as a bushing in plain bearing applications.

Grease Options

When requested, standard bearings can be factory filled with customer specified lubricant.

McGILL® GUIDEROL® Bearings

Basic Construction Type: Machined Race with full Complement of Needles

Rolling Elements: Center Guided Precision Needles

Bearing Material: Bearing Quality Steel

Seal Type: Rubber Lip

Lubrication: Sealed Bearings: Lithium Soap Grease NLGI #1
Unsealed Bearings: Rust Preventative

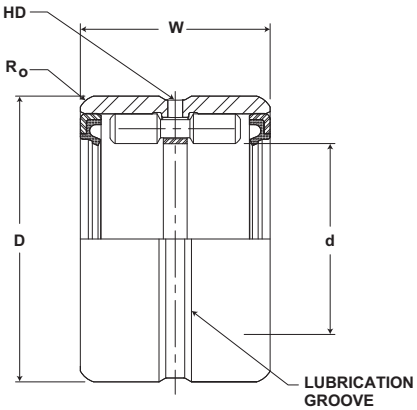

GR SERIES

Part No.	d		D		W	Housing Bore Diameter			HD	Ro	Limiting Speed (In Oil)*	Basic Dynamic Rating	Basic Static Rating	Outer & Roller Assembly Weight
Outer Ring & Roller Assembly	Shaft Diameter		Outside Diameter		Width				Radial Lub. Hole Diameter	Max Hsg Radius to Clear				
	inch mm		inch mm		inch mm	inch mm			inch mm		RPM	lb/N	lb/N	lb kg
	Nom	Tol.	Nom	Tol.	Tol +0/-.005 (+0/.13)	Rotating	Stationary	Tol.	(Ref)	(Ref)				
GR 8 N	.5000 12.7	+0/-.0005 +0/-.013	1.0000 25.4	+0/-.0005 +0/-.013	.750 19.05	0.9997 25.402	1.0070 25.588	+0/-.0007 +0/-.018	.08 2	0.03 1	TBD	2,600 11,565	4,500 20,016	.12 .05
GR 10 N	.6250 15.9	+0/-.0005 +0/-.013	1.1250 28.6	+0/-.0005 +0/-.013	.750 19.05	1.1247 28.579	1.1257 28.604	+0/-.0007 +0/-.018	.08 2	0.03 1	9,600	3,400 15,123	6,400 28,467	.12 .05
						1.1247 28.579	1.1257 28.604	+0/-.0007 +0/-.018	.08 2	0.03 1	9,600	3,400 15,123	6,400 28,467	.12 .05
GR 10 SS, S, RS, SRS, RSS					1.000 25.40	1.1247 28.579	1.1257 28.604	+0/-.0007 +0/-.018	.08 2	0.03 1	6,100	3,400 15,123	6,400 28,467	.15 .07
GR 10						1.1247 28.579	1.1257 28.604	+0/-.0007 +0/-.018	.08 2	0.03 1	9,600	4,700 20,906	9,100 40,477	.15 .07
GR 12 N	.7500 19.1	+0/-.0005 +0/-.013	1.2500 31.8	+0/-.0005 +0/-.013	.750 19.05	1.2497 31.755	1.2507 31.780	+0/-.0007 +0/-.018	.08 2	0.04 1	8,000	3,700 16,458	7,200 32,026	.14 .06
						1.2497 31.755	1.2507 31.780	+0/-.0007 +0/-.018	.08 2	0.04 1	8,000	3,700 16,458	7,200 32,026	.14 .06
GR 12 SS, S, RS, SRS, RSS					1.000 25.40	1.2497 31.755	1.2507 31.780	+0/-.0007 +0/-.018	.08 2	0.04 1	5,100	3,700 16,458	7,200 32,026	.17 .08
GR 12						1.2497 31.755	1.2507 31.780	+0/-.0007 +0/-.018	.08 2	0.04 1	8,000	5,100 22,685	10,900 48,483	.17 .08
GR 14 N	.8750 22.2	+0/-.0005 +0/-.013	1.3750 34.9	+0/-.0005 +0/-.013	.750 19.05	1.3747 34.931	1.3757 34.957	+0/-.0007 +0/-.018	.08 2	0.04 1	6,800	4,150 18,459	8,400 37,363	.16 .07
						1.3747 34.931	1.3757 34.957	+0/-.0007 +0/-.018	.08 2	0.04 1	6,800	4,150 18,459	8,400 37,363	.16 .07
GR 14 SS, S, RS, SRS, RSS					1.000 25.40	1.3747 34.931	1.3757 34.957	+0/-.0007 +0/-.018	.08 2	0.04 1	4,400	4,150 18,459	8,400 37,363	.21 .09
GR 14						1.3747 34.931	1.3757 34.957	+0/-.0007 +0/-.018	.08 2	0.04 1	6,800	5,700 25,354	12,800 56,934	.21 .09
GR 16 N	1.0000 25.4	+0/-.0005 +0/-.013	1.5000 38.1	+0/-.0005 +0/-.013	.750 19.05	1.4997 38.107	1.5007 38.133	+0/-.0007 +0/-.018	.08 2	0.04 1	6,000	4,350 19,349	9,600 42,701	.20 .09
						1.4997 38.107	1.5007 38.133	+0/-.0007 +0/-.018	.08 2	0.04 1	6,000	4,350 19,349	9,600 42,701	.20 .09
GR 16 SS, S, RS, SRS, RSS					1.000 25.40	1.4997 38.107	1.5007 38.133	+0/-.0007 +0/-.018	.08 2	0.04 1	3,800	4,350 19,349	9,600 42,701	.23 .10
GR 16						1.4997 38.107	1.5007 38.133	+0/-.0007 +0/-.018	.08 2	0.04 1	6,000	6,050 26,910	14,500 64,496	.23 .10
GR 18 N	1.1250 28.6	+0/-.0005 +0/-.013	1.6250 41.3	+0/-.0005 +0/-.013	.750 19.05	1.6247 41.284	1.6257 41.309	+0/-.0007 +0/-.018	.09 2	0.04 1	5,300	6,250 27,800	15,200 67,610	.24 .11
						1.6247 41.284	1.6257 41.309	+0/-.0007 +0/-.018	.09 2	0.04 1	5,300	6,250 27,800	15,200 67,610	.24 .11
GR 18 SS, S, RS, SRS, RSS					1.000 25.40	1.6247 41.284	1.6257 41.309	+0/-.0007 +0/-.018	.09 2	0.04 1	3,400	6,250 27,800	15,200 67,610	.3 .14
GR 18						1.6247 41.284	1.6257 41.309	+0/-.0007 +0/-.018	.09 2	0.04 1	5,300	7,900 35,139	20,900 92,963	.3 .14

For sealed bearings, Outside diameter may be slightly oversize due to seal press fit.
For DS matching as DS suffix to part number
* For bearing properly filled with #1 grease reduce speed by 50%

Metric dimensions for reference only.
Not all parts are available from stock. Please contact customer service for availability (800) 626-2120.
For more information on bearing capabilities outside of our standard offering, please contact Application Engineering (800) 626-2093.

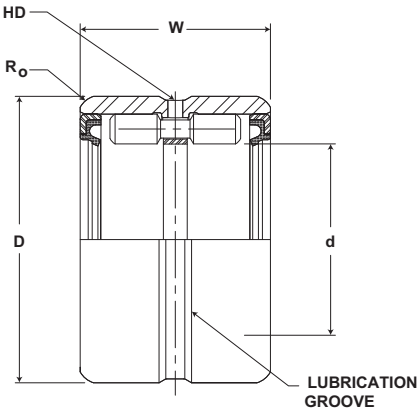

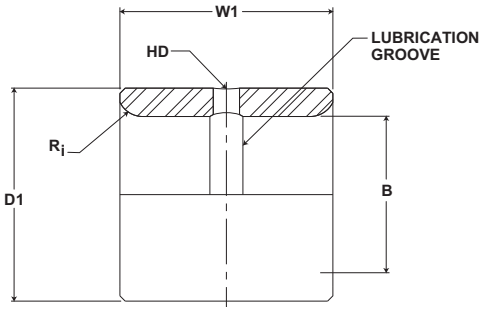

GR SERIES

Part No.		B		D1		W1	HD	Ri	Recommended Shaft Diameter with inner ring			Inner Weight
Outer Ring & Roller Assembly	Separable Inner Ring Only	Bore Diameter		Outside Diameter		Width	Radial Lub. Hole Diameter	Max Shaft Radius to Clear				
		inch mm		inch mm		inch mm			inch mm			lb kg
		Nom	Tol.	Nom	Tol.	Tol +0/-.005 (+0/.13)	(Ref)	(Ref)	Rotating	Stationary	Tol.	
GR 8 N	-	-	-	-	-	-	-	-	-	-	-	-
GR 10 N	MI 6 N	.3750 9.529	+0/-.0004 +0/-.010	.6245 15.869	+0/-.0004 +0/-.010	.760 19.31	0.09 2	0.25 6	.3755 9.5	.3747 9.5	+0/-.0005 +0/-.013	.05 .02
	MI 7 N	.4375 11.117	+0/-.0004 +0/-.010	.6245 15.869	+0/-.0004 +0/-.010	.760 19.31	0.09 2	0.25 6	.4380 11.1	.4372 11.1	+0/-.0005 +0/-.013	.04 .02
GR 10 SS, S, RS, SRS, RSS	MI 6	.3750 9.529	+0/-.0004 +0/-.010	.6245 15.869	+0/-.0004 +0/-.010	1.010 25.66	0.09 2	0.25 6	.3755 9.5	.3747 9.5	+0/-.0005 +0/-.013	.05 .02
GR 10	MI 6	.3750 9.529	+0/-.0004 +0/-.010	.3750 9.530	+0/-.0004 +0/-.010	1.010 25.66	0.09 2	0.25 6	.3755 9.5	.3747 9.5	+0/-.0005 +0/-.013	.05 .02
GR 12 N	MI 8 N	.5000 12.705	+0/-.0004 +0/-.010	.7493 19.040	+0/-.0005 +0/-.013	.760 19.31	0.13 3	0.40 10	.5005 12.7	.4997 12.7	+0/-.0005 +0/-.013	.04 .02
	MI 9 N	.5625 14.293	+0/-.0004 +0/-.010	.7493 19.040	+0/-.0005 +0/-.013	.760 19.31	0.13 3	0.40 10	.5630 14.3	.5623 14.3	+0/-.0005 +0/-.013	.04 .02
GR 12 SS, S, RS, SRS, RSS	MI 8	.5000 12.705	+0/-.0004 +0/-.010	.7493 19.040	+0/-.0005 +0/-.013	1.010 25.66	0.13 3	0.40 10	.5005 12.7	.4997 12.7	+0/-.0005 +0/-.013	.06 .03
GR 12	MI 8	.5000 12.705	+0/-.0004 +0/-.010	.7493 19.040	+0/-.0005 +0/-.013	1.010 25.66	0.13 3	0.40 10	.5005 12.7	.4997 12.7	+0/-.0005 +0/-.013	.06 .03
GR 14 N	MI 10 N	.6250 15.881	+0/-.0004 +0/-.010	.8743 22.216	+0/-.0005 +0/-.013	.760 19.31	0.13 3	0.40 10	.6255 15.9	.6247 15.9	+0/-.0005 +0/-.013	.06 .03
	MI 11 N	.6875 17.469	+0/-.0004 +0/-.010	.8743 22.216	+0/-.0005 +0/-.013	.760 19.31	0.13 3	0.40 10	.6880 17.5	.6872 17.5	+0/-.0005 +0/-.013	.05 .02
GR 14 SS, S, RS, SRS, RSS	MI 10	.6250 15.881	+0/-.0004 +0/-.010	.8743 22.216	+0/-.0005 +0/-.013	1.010 25.66	0.13 3	0.40 10	.6255 15.9	.6247 15.9	+0/-.0005 +0/-.013	.08 .04
GR 14	MI 10	.6250 15.881	+0/-.0004 +0/-.010	.8743 22.216	+0/-.0005 +0/-.013	1.010 25.66	0.13 3	0.40 10	.6255 15.9	.6247 15.9	+0/-.0005 +0/-.013	.08 .04
GR 16 N	MI 12 N	.7500 19.058	+0/-.0004 +0/-.010	.9993 25.392	+0/-.0005 +0/-.013	.760 19.31	0.13 3	0.40 10	.7505 19.1	.7497 19.0	+0/-.0005 +0/-.013	.07 .03
	MI 13 N	.8125 20.646	+0/-.0004 +0/-.010	.9993 25.392	+0/-.0005 +0/-.013	.760 19.31	0.13 3	0.40 10	.8130 20.7	.8121 20.6	+0/-.0005 +0/-.013	.07 .03
GR 16 SS, S, RS, SRS, RSS	MI 12	.7500 19.058	+0/-.0004 +0/-.010	.9993 25.392	+0/-.0005 +0/-.013	1.010 25.66	0.13 3	0.40 10	.7505 19.1	.7497 19.0	+0/-.0005 +0/-.013	.10 .05
GR 16	MI 13	.8125 20.646	+0/-.0004 +0/-.010	.9993 25.392	+0/-.0005 +0/-.013	1.010 25.66	0.13 3	0.40 10	.8130 20.7	.8121 20.6	+0/-.0005 +0/-.013	.11 .05
GR 18 N	MI 14 N	.8750 22.234	+0/-.0005 +0/-.013	1.124 28.563	+0/-.0005 +0/-.013	1.010 25.66	0.13 3	0.40 10	.8755 22.2	.8746 22.2	+0/-.0005 +0/-.013	.11 .05
	MI 15 N	.9375 23.822	+0/-.0005 +0/-.013	1.124 28.563	+0/-.0005 +0/-.013	1.010 25.66	0.13 3	0.40 10	.9380 23.8	.9371 23.8	+0/-.0005 +0/-.013	.11 .05
GR 18 SS, S, RS, SRS, RSS	MI 14	.8750 22.234	+0/-.0005 +0/-.013	1.124 28.563	+0/-.0005 +0/-.013	1.260 32.02	0.13 3	0.40 10	.8755 22.2	.8746 22.2	+0/-.0005 +0/-.013	.13 .06
GR 18	MI 15	.9375 23.822	+0/-.0005 +0/-.013	1.124 28.563	+0/-.0005 +0/-.013	1.260 32.02	0.13 3	0.40 10	.9380 23.8	.9371 23.8	+0/-.0005 +0/-.013	.12 .06

McGILL® GUIDEROL® Bearings

Basic Construction Type: Machined Race with full Complement of Needles

Rolling Elements: Center Guided Precision Needles

Bearing Material: Bearing Quality Steel

Seal Type: Rubber Lip

Lubrication: Sealed Bearings: Lithium Soap Grease NLGI #1
Unsealed Bearings: Rust Preventative

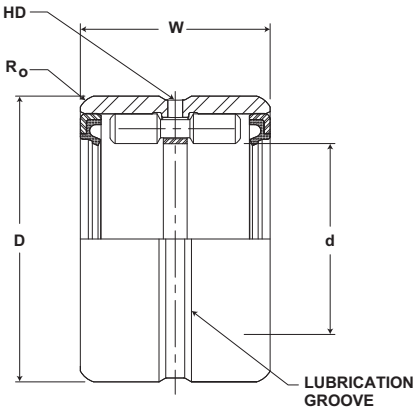

GR SERIES (continued)

Part No.	d		D		W	Housing Bore Diameter			HD	Ro	Limiting Speed (In Oil)*	Basic Dynamic Rating	Basic Static Rating	Outer & Roller Assembly Weight
Outer Ring & Roller Assembly	Shaft Diameter		Outside Diameter		Width				Radial Lub. Hole Diameter	Max Hsg Radius to Clear				
	inch mm		inch mm		inch mm	inch mm			inch mm		RPM	lb/N	lb/N	lb kg
	Nom	Tol.	Nom	Tol.	Tol +0/-.005 (+0/.13)	Rotating	Stationary	Tol.	(Ref)	(Ref)				
GR 20 N	1.2500 31.8	+0/-.0005 +0/-.013	1.7500 44.5	+0/-.0005 +0/-.013	1.000 25.40	1.7497 44.460	1.7507 44.485	+0/-.0007 +0/-.018	.09 2	0.04 1	4,800	6,500 28,912	17,000 75,616	.27 .12
GR 20 SS, S, RS, SRS, RSS					1.250 31.75	1.7497 44.460	1.7507 44.485	+0/-.0007 +0/-.018	.09 2	0.04 1	3,050	6,500 28,912	17,000 75,616	.39 .15
GR 20						1.7497 44.460	1.7507 44.485	+0/-.0007 +0/-.018	.09 2	0.04 1	4,800	8,300 36,918	23,100 102,749	.39 .15
GR 22 N	1.3750 34.9	+0/-.0005 +0/-.013	1.8750 47.6	+0/-.0006 +0/-.015	1.000 25.40	1.8747 47.636	1.8757 47.662	+0/-.0007 +0/-.018	.09 2	0.04 1	4,400	7,100 31,581	18,600 82,733	.31 .14
GR 22 SS, S, RS, SRS, RSS					1.250 31.75	1.8747 47.636	1.8757 47.662	+0/-.0007 +0/-.018	.09 2	0.04 1	2,800	7,100 31,581	18,600 82,733	.36 .16
GR 22						1.8747 47.636	1.8757 47.662	+0/-.0007 +0/-.018	.09 2	0.04 1	4,400	9,050 40,254	25,500 113,424	.36 .16
GR 24 N	1.5000 38.1	+0/-.0005 +0/-.013	2.0625 52.4	+0/-.0006 +0/-.015	1.000 25.40	2.0621 52.398	2.0632 52.426	+0/-.0007 +0/-.018	.09 2	0.06 2	4,000	7,150 31,803	20,200 89,850	.41 .19
GR 24 SS, S, RS, SRS, RSS					1.250 31.75	2.0621 52.398	2.0632 52.426	+0/-.0007 +0/-.018	.09 2	0.06 2	2,500	7,150 31,803	20,200 89,850	.47 .21
GR 24						2.0621 52.398	2.0632 52.426	+0/-.0007 +0/-.018	.09 2	0.06 2	4,000	9,150 40,699	27,800 123,654	.47 .21
GR 26 N	1.6250 41.3	+0/-.0005 +0/-.013	2.1875 55.6	+0/-.0006 +0/-.015	1.000 25.40	2.1871 55.574	2.1882 55.602	+0/-.0007 +0/-.018	.09 2	0.06 2	3,700	7,500 33,360	21,700 96,522	.46 .21
GR 26 SS, S, RS, SRS, RSS					1.250 31.75	2.1871 55.574	2.1882 55.602	+0/-.0007 +0/-.018	.09 2	0.06 2	2,350	7,500 33,360	21,700 96,522	.51 .23
GR 26						2.1871 55.574	2.1882 55.602	+0/-.0007 +0/-.018	.09 2	0.06 2	3,700	9,600 42,701	29,800 132,550	.51 .23
GR 28 N	1.7500 44.5	+0/-.0005 +0/-.013	2.3125 58.8	+0/-.0006 +0/-.015	1.000 25.40	2.3121 58.750	2.3132 58.778	+0/-.0007 +0/-.018	.09 2	0.06 2	3,400	7,750 34,472	23,300 103,638	.47 .21
GR 28 SS, S, RS, SRS, RSS					1.250 31.75	2.3121 58.750	2.3132 58.778	+0/-.0007 +0/-.018	.09 2	0.06 2	2,200	7,750 34,472	23,300 103,638	.55 .25
GR 28						2.3121 58.750	2.3132 58.778	+0/-.0007 +0/-.018	.09 2	0.06 2	3,400	9,850 43,813	32,100 142,781	.55 .25
						2.3121 58.750	2.3132 58.778	+0/-.0007 +0/-.018	.09 2	0.06 2	3,400	9,850 43,813	32,100 142,781	.55 .25
GR 30 SS, S, RS, SRS, RSS	1.8750 47.6	+0/-.0005 +0/-.013	2.4375 61.9	+0/-.0006 +0/-.015	1.250 31.75	2.4371 61.927	2.4382 61.955	+0/-.0007 +0/-.018	.09 2	0.06 2	2,040	8,150 36,251	25,200 112,090	.59 .27
GR 30						2.4371 61.927	2.4382 61.955	+0/-.0007 +0/-.018	.09 2	0.06 2	3,100	8,150 36,251	25,200 112,090	.59 .27
GR 32 N	2.0000 50.8	+0/-.0005 +0/-.013	2.5625 65.1	+0/-.0006 +0/-.015	1.000 25.40	2.5621 65.103	2.5632 65.131	+0/-.0007 +0/-.018	.09 2	0.06 2	3,000	8,000 35,584	26,700 118,762	.55 .25
GR 32 SS, S, RS, SRS, RSS					1.250 31.75	2.5621 65.103	2.5632 65.131	+0/-.0007 +0/-.018	.09 2	0.06 2	1,900	8,000 35,584	26,700 118,762	.61 .28
GR 32						2.5621 65.103	2.5632 65.131	+0/-.0007 +0/-.018	.09 2	0.06 2	3,000	10,250 45,592	36,700 163,242	.61 .28
						2.5621 65.103	2.5632 65.131	+0/-.0007 +0/-.018	.09 2	0.06 2	3,000	10,250 45,592	36,700 163,242	.61 .28

For sealed bearings, Outside diameter may be slightly oversize due to seal press fit.
For DS matching as DS suffix to part number
* For bearing properly filled with #1 grease reduce speed by 50%

Metric dimensions for reference only.
Not all parts are available from stock. Please contact customer service for availability (800) 626-2120.
For more information on bearing capabilities outside of our standard offering, please contact Application Engineering (800) 626-2093.

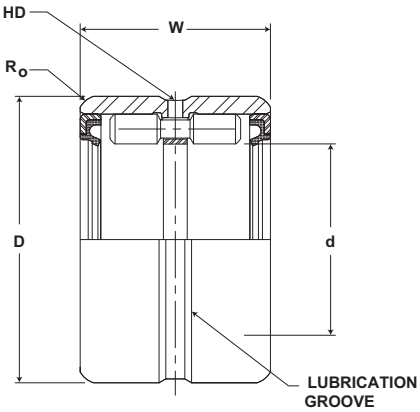

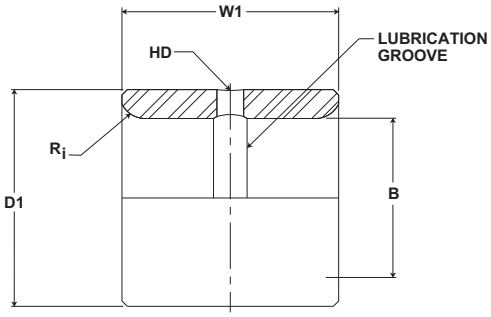

GR SERIES (continued)

Part No.		B		D1		W1	HD	Ri	Recommended Shaft Diameter with inner ring			Inner Weight
Outer Ring & Roller Assembly	Separable Inner Ring Only	Bore Diameter		Outside Diameter		Width	Radial Lub. Hole Diameter	Max Shaft Radius to Clear				
		inch mm		inch mm		inch mm			inch mm			lb kg
		Nom	Tol.	Nom	Tol.	Tol +0/-.005 (+0/.13)	(Ref)	(Ref)	Rotating	Stationary	Tol.	
GR 20 N	MI 16 N	1.0000 25.410	+0/-.0005 +0/-.013	1.2491 31.740	+0/-.0006 +0/-.015	1.010 25.66	0.13 3	0.40 10	1.0005 25.4	0.9996 25.4	+0/-.0005 +0/-.013	.13 .06
GR 20 SS, S, RS, SRS, RSS	MI 16	1.0000 25.410	+0/-.0005 +0/-.013	1.2491 31.740	+0/-.0006 +0/-.015	1.260 32.02	0.13 3	0.40 10	1.0005 25.4	0.9996 25.4	+0/-.0005 +0/-.013	.16 .07
GR 20	MI 16	1.0000 25.410	+0/-.0005 +0/-.013	1.2491 31.740	+0/-.0006 +0/-.015	1.260 32.02	0.13 3	0.40 10	1.0005 25.4	0.9996 25.4	+0/-.0005 +0/-.013	.16 .07
GR 22 N	MI 18 N	1.1250 28.586	+0/-.0005 +0/-.013	1.3741 34.916	+0/-.0006 +0/-.015	1.010 25.66	0.13 3	0.40 10	1.1255 28.6	1.1246 28.6	+0/-.0005 +0/-.013	.14 .06
GR 22 SS, S, RS, SRS, RSS	MI 18	1.1250 28.586	+0/-.0005 +0/-.013	1.3741 34.916	+0/-.0006 +0/-.015	1.260 32.02	0.13 3	0.40 10	1.1255 28.6	1.1246 28.6	+0/-.0005 +0/-.013	.17 .08
GR 22	MI 17	1.0625 26.998	+0/-.0005 +0/-.013	1.3741 34.916	+0/-.0006 +0/-.015	1.260 32.02	0.13 3	0.40 10	1.0630 27.0	1.0621 27.0	+0/-.0005 +0/-.013	.16 .07
GR 24 N	MI 20 N	1.2500 31.763	+0/-.0005 +0/-.013	1.4990 38.090	+0/-.0006 +0/-.015	1.010 25.66	0.13 3	0.06 2	1.2505 31.8	1.2496 31.8	+0/-.0005 +0/-.013	.19 .09
GR 24 SS, S, RS, SRS, RSS	MI 20	1.2500 31.763	+0/-.0005 +0/-.013	1.4990 38.090	+0/-.0006 +0/-.015	1.260 32.02	0.13 3	0.06 2	1.2505 31.8	1.2496 31.8	+0/-.0005 +0/-.013	.22 .09
GR 24	MI 19	1.1875 30.174	+0/-.0005 +0/-.013	1.4990 38.090	+0/-.0006 +0/-.015	1.260 32.02	0.13 3	0.06 2	1.1880 30.2	1.1871 30.2	+0/-.0005 +0/-.013	.24 .11
GR 26 N	MI 21 N	1.3125 33.351	+0/-.0005 +0/-.013	1.6240 41.266	+0/-.0006 +0/-.015	1.010 25.66	0.13 3	0.06 2	1.3130 33.4	1.3121 33.3	+0/-.0005 +0/-.013	.20 .09
GR 26 SS, S, RS, SRS, RSS	MI 21	1.3125 33.351	+0/-.0005 +0/-.013	1.6240 41.266	+0/-.0006 +0/-.015	1.260 32.02	0.13 3	0.06 2	1.3130 33.4	1.3121 33.3	+0/-.0005 +0/-.013	.26 .12
GR 26	MI 22 4S	1.3750 34.939	+0/-.0005 +0/-.013	1.6240 41.266	+0/-.0006 +0/-.015	1.260 32.02	0.13 3	0.06 2	1.3755 35.0	1.3746 34.9	+0/-.0005 +0/-.013	.20 .09
GR 28 N	MI 24 N	1.5000 38.115	+0/-.0005 +0/-.013	1.7490 44.442	+0/-.0006 +0/-.015	1.010 25.66	0.13 3	0.06 2	1.5005 38.1	1.4996 38.1	+0/-.0005 +0/-.013	.22 .09
GR 28 SS, S, RS, SRS, RSS	MI 22	1.3750 34.939	+0/-.0005 +0/-.013	1.7490 44.442	+0/-.0006 +0/-.015	1.260 32.02	0.13 3	0.06 2	1.3755 35.0	1.3746 34.9	+0/-.0005 +0/-.013	.26 .12
GR 28	MI 23	1.4375 36.527	+0/-.0005 +0/-.013	1.7490 44.442	+0/-.0006 +0/-.015	1.260 32.02	0.13 3	0.06 2	1.4380 36.5	1.4371 36.5	+0/-.0005 +0/-.013	.27 .12
	MI 24	1.5000 38.115	+0/-.0005 +0/-.013	1.7490 44.442	+0/-.0006 +0/-.015	1.260 32.02	0.13 3	0.06 2	1.5005 38.1	1.4996 38.1	+0/-.0005 +0/-.013	.22 .09
GR 30 SS, S, RS, SRS, RSS	MI 25 4S	1.5625 39.703	+0/-.0005 +0/-.013	1.8740 47.618	+0/-.0006 +0/-.015	1.260 32.02	0.13 3	0.06 2	1.5630 39.7	1.5621 39.7	+0/-.0005 +0/-.013	.27 .12
GR 30	MI 25 4S	1.5625 39.703	+0/-.0005 +0/-.013	1.8740 47.618	+0/-.0006 +0/-.015	1.260 32.02	0.13 3	0.06 2	1.5630 39.7	1.5621 39.7	+0/-.0005 +0/-.013	.27 .12
GR 32 N	MI 26 N	1.6250 41.291	+0/-.0005 +0/-.013	1.9989 50.792	+0/-.0007 +0/-.018	1.010 25.66	0.13 3	0.06 2	1.6255 41.3	1.6246 41.3	+0/-.0005 +0/-.013	.30 .14
GR 32 SS, S, RS, SRS, RSS	MI 25	1.5625 39.703	+0/-.0005 +0/-.013	1.9989 50.792	+0/-.0007 +0/-.018	1.260 32.02	0.13 3	0.06 2	1.5630 39.7	1.5621 39.7	+0/-.0005 +0/-.013	.30 .14
GR 32	MI 26	1.6250 41.291	+0/-.0005 +0/-.013	1.9989 50.792	+0/-.0007 +0/-.018	1.260 32.0	0.13 3	0.06 2	1.6255 41.3	1.6246 41.3	+0/-.0005 +0/-.013	.38 .17
	MI 27	1.6875 42.879	+0/-.0005 +0/-.013	1.9989 50.792	+0/-.0007 +0/-.018	1.260 32.0	0.13 3	0.06 2	1.6880 42.9	1.6871 42.9	+0/-.0005 +0/-.013	.32 .15

McGILL® GUIDEROL® Bearings

Basic Construction Type: Machined Race with full Complement of Needles

Rolling Elements: Center Guided Precision Needles

Bearing Material: Bearing Quality Steel

Seal Type: Rubber Lip

Lubrication: Sealed Bearings: Lithium Soap Grease NLGI #1
Unsealed Bearings: Rust Preventative

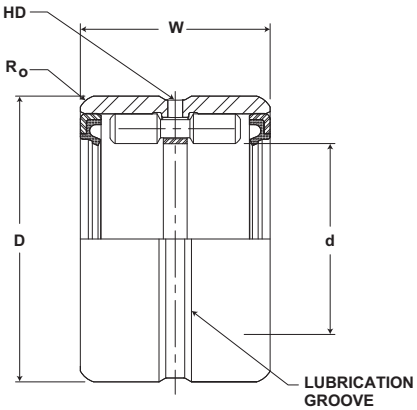

GR SERIES (continued)

Part No.	d		D		W	Housing Bore Diameter			HD	Ro	Limiting Speed (In Oil)*	Basic Dynamic Rating	Basic Static Rating	Outer & Roller Assembly Weight
Outer Ring & Roller Assembly	Shaft Diameter		Outside Diameter		Width				Radial Lub. Hole Diameter	Max Hsg Radius to Clear				
	inch mm		inch mm		inch mm	inch mm			inch mm		RPM	lb/N	lb/N	lb kg
	Nom	Tol.	Nom	Tol.	Tol +0/-.005 (+0/.13)	Rotating	Stationary	Tol.	(Ref)	(Ref)				
GR 36 N	2.2500 57.2	+0/-.0005 +0/-.013	3.0000 76.2	+0/-.0006 +0/-.015	1.500 38.10	2.9996 76.220	3.0007 76.248	+0/-.0007 +0/-.018	.13 3	0.08 2	2,700	15,250 67,832	49,100 218,397	1.13 .51
GR 36 SS, S, RS, SRS, RSS					1.750 44.45	2.9996 76.220	3.0007 76.248	+0/-.0007 +0/-.018	.13 3	0.08 2	1,700	15,250 67,832	49,100 218,397	1.32 .59
GR 36						2.9996 76.220	3.0007 76.248	+0/-.0007 +0/-.018	.13 3	0.08 2	2,700	18,450 82,066	60,200 267,770	1.32 .59
GR 40 N	2.5000 63.5	+0/-.0005 +0/-.013	3.2500 82.6	+0/-.0008 +0/-.020	1.500 38.10	3.2496 82.572	3.2507 82.600	+0/-.0007 +0/-.018	.13 3	0.08 2	2,400	16,200 72,058	54,500 242,416	1.23 .56
GR 40 SS, S, RS, SRS, RSS					1.750 44.45	3.2496 82.572	3.2507 82.600	+0/-.0007 +0/-.018	.13 3	0.08 2	1,530	16,200 72,058	54,500 242,416	1.44 .65
GR 40						3.2496 82.572	3.2507 82.600	+0/-.0007 +0/-.018	.13 3	0.08 2	2,400	19,800 88,070	66,800 297,126	1.44 .65
						3.2496 82.572	3.2507 82.600	+0/-.0007 +0/-.018	.13 3	0.08 2	2,400	19,800 88,070	66,800 297,126	1.44 .65
GR 44 N	2.7500 69.9	+0/-.0005 +0/-.013	3.5000 88.9	+0/-.0008 +0/-.020	1.500 38.10	3.4995 88.922	3.5008 88.955	+0/-.0010 +0/-.025	.13 3	0.08 2	2,200	16,800 74,726	59,900 266,435	1.36 .62
GR 44 SS, S, RS, SRS, RSS					1.750 44.45	3.4995 88.922	3.5008 88.955	+0/-.0010 +0/-.025	.13 3	0.08 2	1,390	16,800 74,726	59,900 266,435	1.59 .72
GR 44						3.4995 88.922	3.5008 88.955	+0/-.0010 +0/-.025	.13 3	0.08 2	2,200	20,350 90,517	73,400 326,483	1.59 .72
GR 48 N	3.0000 76.2	+0/-.0005 +0/-.013	3.7500 95.3	+0/-.0008 +0/-.020	1.500 38.10	3.7495 95.275	3.7508 95.308	+0/-.0010 +0/-.025	.13 3	0.08 2	2,000	20,500 91,184	65,400 290,899	1.53 .69
GR 48 SS, S, RS, SRS, RSS					1.750 44.45	3.7495 95.275	3.7508 95.308	+0/-.0010 +0/-.025	.13 3	0.08 2	1,270	20,500 91,184	65,400 290,899	1.70 .77
GR 48						3.7495 95.275	3.7508 95.308	+0/-.0010 +0/-.025	.13 3	0.08 2	2,000	20,600 91,629	80,200 356,730	1.70 .77
						3.7495 95.275	3.7508 95.308	+0/-.0010 +0/-.025	.13 3	0.08 2	2,000	20,600 91,629	80,200 356,730	1.70 .77
GR 52 SS, S, RS, SRS, RSS	3.2500 82.6	+0/-.0005 +0/-.013	4.2500 108.0	+0/-.0008 +0/-.020	1.750 44.45	4.2495 107.980	4.2508 108.013	+0/-.0010 +0/-.025	.19 5	0.08 2	1,175	25,100 111,645	63,800 283,782	2.64 1.19
GR 52						4.2495 107.980	4.2508 108.013	+0/-.0010 +0/-.025	.19 5	0.08 2	1,850	23,950 106,530	80,100 356,285	2.64 1.19
GR 56 N	3.5000 88.9	+0/-.0005 +0/-.013	4.5000 114.3	+0/-.0008 +0/-.020	1.750 44.45	3.2496 82.572	3.2507 82.600	+0/-.0010 +0/-.025	.19 5	0.08 2	1,700	25,100 111,645	86,500 384,752	2.88 1.31
GR 56 SS, S, RS, SRS, RSS					2.000 50.80	3.4995 88.922	3.5008 88.955	+0/-.0010 +0/-.025	.19 5	0.08 2	1,090	25,100 111,645	86,500 384,752	3.18 1.44
GR 56						3.4995 88.922	3.5008 88.955	+0/-.0010 +0/-.025	.19 5	0.08 2	1,700	28,900 128,547	104,000 462,592	3.18 1.44
						3.4995 88.922	3.5008 88.955	+0/-.0010 +0/-.025	.19 5	0.08 2	1,700	28,900 128,547	104,000 462,592	3.18 1.44
GR 60 SS, S, RS, SRS, RSS	3.7500 95.3	+0/-.0005 +0/-.013	4.7500 120.7	+0/-.0008 +0/-.020	2.000 50.80	4.7495 120.685	4.7508 120.718	+0/-.0010 +0/-.025	.19 5	0.10 3	1,020	25,450 113,202	92,300 410,550	3.38 1.53
GR 60						4.7495 120.685	4.7508 120.718	+0/-.0010 +0/-.025	.19 5	0.10 3	1,600	29,300 130,326	111,000 493,728	3.38 1.53

For sealed bearings, Outside diameter may be slightly oversize due to seal press fit.
For DS matching as DS suffix to part number
* For bearing properly filled with #1 grease reduce speed by 50%

Metric dimensions for reference only.
Not all parts are available from stock. Please contact customer service for availability (800) 626-2120.
For more information on bearing capabilities outside of our standard offering, please contact Application Engineering (800) 626-2093.

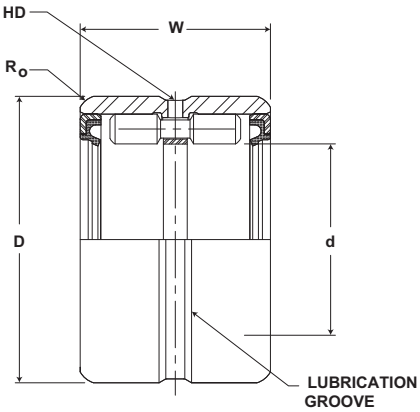

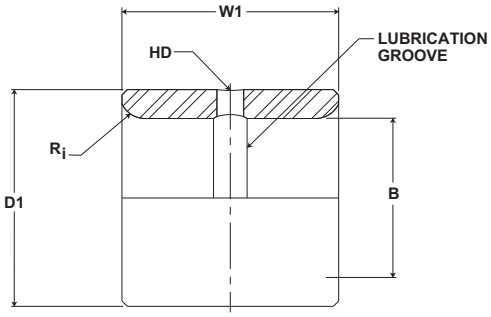

GR SERIES (continued)

Part No.		B		D1		W1	HD	Ri	Recommended Shaft Diameter with inner ring			Inner Weight
Outer Ring & Roller Assembly	Separable Inner Ring Only	Bore Diameter		Outside Diameter		Width	Radial Lub. Hole Diameter	Max Shaft Radius to Clear				
		inch mm		inch mm		inch mm			inch mm			lb kg
		Nom	Tol.	Nom	Tol.	Tol +0/-.005 (+0/.13)	(Ref)	(Ref)	Rotating	Stationary	Tol.	
GR 36 N	MI 28 N	1.7500 44.468	+0/-.0005 +0/-.013	2.2489 57.145	+0/-.0007 +0/-.018	1.510 38.37	0.19 5	0.06 2	1.7505 44.5	1.7496 44.5	+0/-.0005 +0/-.013	.63 .29
GR 36 SS, S, RS, SRS, RSS	MI 28	1.7500 44.468	+0/-.0005 +0/-.013	2.2489 57.1	+0/-.0007 +0/-.018	1.760 44.72	0.19 5	0.06 2	1.7505 44.5	1.7497 44.5	+0/-.0005 +0/-.013	.74 .34
GR 36	MI 30	1.8750 47.644	+0/-.0005 +0/-.013	2.2489 57.1	+0/-.0007 +0/-.018	1.760 44.72	0.19 5	0.06 2	1.8755 47.7	1.8746 47.6	+0/-.0005 +0/-.013	.85 .39
GR 40 N	MI 32 N	2.0000 50.820	+0/-.0005 +0/-.013	2.2489 57.145	+0/-.0007 +0/-.018	1.510 38.37	0.19 5	0.08 2	2.0005 50.8	1.9996 50.8	+0/-.0005 +0/-.013	.74 .34
GR 40 SS, S, RS, SRS, RSS	MI 31	1.9375 49.232	+0/-.0005 +0/-.013	2.2489 57.1	+0/-.0007 +0/-.018	1.510 38.4	0.19 5	0.08 2	1.9380 49.2	1.9371 49.2	+0/-.0005 +0/-.013	.97 .44
GR 40	MI 32	2.0000 50.820	+0/-.0005 +0/-.013	2.2489 57.1	+0/-.0007 +0/-.018	1.760 44.72	0.19 5	0.08 2	2.0005 50.8	1.9996 50.8	+0/-.0005 +0/-.013	.87 .39
	MI 34	2.1250 53.996	+0/-.0006 +0/-.015	2.2489 57.1	+0/-.0007 +0/-.018	1.760 44.7	0.19 5	0.08 2	2.1258 54.0	2.1247 54.0	+0/-.0008 +0/-.020	1.00 .45
GR 44 N	MI 36 N	2.2500 57.173	+0/-.0006 +0/-.015	2.7489 69.850	+0/-.0007 +0/-.018	1.510 38.37	0.19 5	0.08 2	2.2508 57.2	2.2497 57.2	+0/-.0008 +0/-.020	.83 .36
GR 44 SS, S, RS, SRS, RSS	MI 35	2.1875 55.584	+0/-.0006 +0/-.015	2.7489 69.8	+0/-.0007 +0/-.018	1.510 38.4	0.19 5	0.08 2	2.1883 55.6	2.1872 55.6	+0/-.0008 +0/-.020	1.06 .48
GR 44	MI 36	2.2500 57.173	+0/-.0006 +0/-.015	2.7489 69.8	+0/-.0007 +0/-.018	1.760 44.72	0.19 5	0.08 2	2.2508 57.2	2.2497 57.2	+0/-.0008 +0/-.020	.97 .44
GR 48 N	MI 40 N	2.5000 63.525	+0/-.0006 +0/-.015	2.9989 76.202	+0/-.0007 +0/-.018	1.510 38.37	0.19 5	0.08 2	2.5008 63.5	2.4997 63.5	+0/-.0008 +0/-.020	.92 .43
GR 48 SS, S, RS, SRS, RSS	MI 38	2.3750 60.349	+0/-.0006 +0/-.015	2.9989 76.2	+0/-.0007 +0/-.018	1.760 44.72	0.19 5	0.08 2	2.3758 60.4	2.3747 60.3	+0/-.0008 +0/-.020	1.28 .58
GR 48	MI 39	2.4375 61.937	+0/-.0006 +0/-.015	2.9989 76.2	+0/-.0007 +0/-.018	1.510 38.37	0.19 5	0.08 2	2.4383 62.0	2.4372 61.9	+0/-.0008 +0/-.020	1.05 .47
	MI 40	2.5000 63.525	+0/-.0006 +0/-.015	2.9989 76.2	+0/-.0007 +0/-.018	1.760 44.72	0.19 5	0.08 2	2.5008 63.5	2.4997 63.5	+0/-.0008 +0/-.020	1.07 .48
GR 52 SS, S, RS, SRS, RSS	MI 42	2.6250 66.701	+0/-.0006 +0/-.015	3.2487 82.549	+0/-.0009 +0/-.023	1.760 44.72	0.19 5	0.08 2	2.6258 66.7	2.6247 66.7	+0/-.0008 +0/-.020	1.12 .51
GR 52	MI 44	2.7500 69.878	+0/-.0006 +0/-.015	3.2487 82.549	+0/-.0009 +0/-.023	1.760 44.72	0.19 5	0.08 2	2.7508 69.9	2.7497 69.9	+0/-.0008 +0/-.020	1.17 .53
GR 56 N	MI 48 N	3.0000 76.230	+0/-.0006 +0/-.015	3.4987 88.902	+0/-.0009 +0/-.023	1.760 44.72	0.25 6	0.08 2	3.0008 76.3	2.9997 76.2	+0/-.0008 +0/-.020	1.32 .55
GR 56 SS, S, RS, SRS, RSS	MI 46	2.8750 73.054	+0/-.0006 +0/-.015	3.4987 88.9	+0/-.0009 +0/-.023	2.010 51.07	0.25 6	0.08 2	2.8758 73.1	2.8747 73.0	+0/-.0008 +0/-.020	1.30 .59
GR 56	MI 47	2.9375 74.642	+0/-.0006 +0/-.015	3.4987 88.9	+0/-.0009 +0/-.023	2.010 51.07	0.25 6	0.08 2	2.9383 74.7	2.9372 74.6	+0/-.0008 +0/-.020	1.58 .72
	MI 48	3.0000 76.230	+0/-.0006 +0/-.015	3.4987 88.9	+0/-.0009 +0/-.023	2.010 51.1	0.25 6	0.08 2	3.0008 76.3	2.9997 76.2	+0/-.0008 +0/-.020	1.43 .65
GR 60 SS, S, RS, SRS, RSS	MI 50	3.1250 79.406	+0/-.0006 +0/-.015	3.7487 95.254	+0/-.0009 +0/-.023	2.010 51.07	0.25 6	0.10 3	3.1260 79.4	3.1246 79.4	+0/-.0010 +0/-.025	1.88 .85
GR 60	MI 52	3.2500 82.583	+0/-.0006 +0/-.015	3.7487 95.254	+0/-.0009 +0/-.023	2.010 51.07	0.25 6	0.10 3	3.2510 82.6	3.2496 82.6	+0/-.0010 +0/-.025	1.52 .69

Basic Construction Type: Machined Race with full Complement of Needles

Rolling Elements: Center Guided Precision Needles

Bearing Material: Bearing Quality Steel

Seal Type: Rubber Lip

Lubrication: Sealed Bearings: Lithium Soap Grease NLGI #1
Unsealed Bearings: Rust Preventative

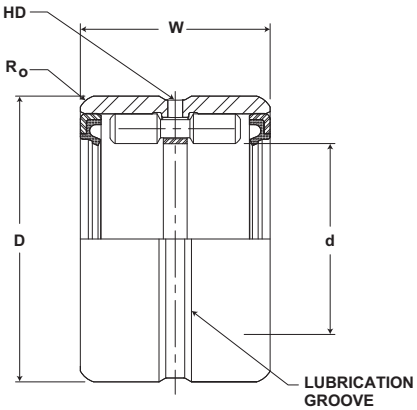

GR SERIES (continued)

Part No.	d		D		W	Housing Bore Diameter			HD	Ro	Limiting Speed (In Oil)*	Basic Dynamic Rating	Basic Static Rating	Outer & Roller Assembly Weight
Outer Ring & Roller Assembly	Shaft Diameter		Outside Diameter		Width				Radial Lub. Hole Diameter	Max Hsg Radius to Clear				
	inch mm		inch mm		inch mm	inch mm			inch mm		RPM	lb/N	lb/N	lb kg
	Nom	Tol.	Nom	Tol.	Tol +0/-.005 (+0/.13)	Rotating	Stationary	Tol.	(Ref)	(Ref)				
GR 64 SS, S, RS, SRS, RSS	4.0000 101.6	+0/-.0007 +0/-.018	5.0000 127.1	+0/-.0010 +0/-.025	2.000 50.80	4.9999 127.047	5.0011 127.078	+0/-.0015 +0/-.038	.19 5	0.10 3	950	26,750 118,984	98,800 439,462	3.56 1.61
GR 64						4.9999 127.047	5.0011 127.078	+0/-.0015 +0/-.038	.19 5	0.10 3	1,500	30,900 137,443	119,000 529,312	3.56 1.61
GR 68 SS, S, RS, SRS, RSS	4.2500 108.0	+0/-.0007 +0/-.018	5.2500 133.4	+0/-.0010 +0/-.025	2.000 50.80	5.2499 133.400	5.2511 133.430	+0/-.0015 +0/-.038	.19 5	0.10 3	900	27,400 121,875	104,000 462,592	3.74 1.69
GR 68						5.2499 133.400	5.2511 133.430	+0/-.0015 +0/-.038	.19 5	0.10 3	1,410	31,500 140,112	126,000 560,448	3.74 1.69
GR 72	4.5000 114.3	+0/-.0007 +0/-.018	6.0000 152.5	+0/-.0010 +0/-.025	2.250 57.15	5.9999 152.457	6.0011 152.488	+0/-.0015 +0/-.038	.19 5	0.10 3	1,330	43,400 193,043	145,000 644,960	7.13 3.23
GR 80	5.0000 127.1	+0/-.0007 +0/-.018	6.5000 165.2	+0/-.0010 +0/-.025	2.250 57.15	6.4999 165.162	6.5011 165.193	+0/-.0015 +0/-.038	.19 5	0.10 3	1,200	48,800 217,062	161,000 716,128	7.78 3.53
						6.4999 165.162	6.5011 165.193	+0/-.0015 +0/-.038	.19 5	0.10 3	1,200	48,800 217,062	161,000 716,128	7.78 3.53
GR 88 N	5.5000 139.8	+0/-.0007 +0/-.018	7.0000 177.9	+0/-.0010 +0/-.025	2.500 63.50	4.7495 120.685	4.7508 120.718	+0/-.0015 +0/-.038	.25 6	0.10 3	1,090	60,700 269,994	171,000 760,608	10.40 4.73
GR 88					3.000 76.20	4.7495 120.685	4.7508 120.718	+0/-.0015 +0/-.038	.25 6	0.10 3	1,090	65,000 289,120	205,000 911,840	11.82 5.36
GR 96 N	6.0000 152.5	+0/-.0010 +0/-.025	7.5000 190.6	+0/-.0012 +0/-.030	2.500 63.50	5.2499 133.400	5.2511 133.430	+0/-.0015 +0/-.038	.25 6	0.12 3	1,000	65,700 292,234	223,000 991,904	11.08 5.02
GR 96					3.000 76.20	5.2499 133.400	5.2511 133.430	+0/-.0015 +0/-.038	.25 6	0.12 3	1,000	71,400 317,587	283,000 1,258,784	12.69 5.76
GR 104 N	6.5000 165.2	+0/-.0010 +0/-.025	8.0000 203.3	+0/-.0012 +0/-.030	2.500 63.50	5.9999 152.457	6.0011 152.488	+0/-.0015 +0/-.038	.25 6	0.12 3	930	68,900 306,467	242,000 1,076,416	11.85 5.37
GR 104					3.000 76.20	5.9999 152.457	6.0011 152.488	+0/-.0015 +0/-.038	.25 6	0.12 3	930	75,000 333,600	308,000 1,369,984	13.55 6.15
GR 116	7.2500 184.2	+0/-.0010 +0/-.025	9.1250 231.9	+0/-.0012 +0/-.030	3.000 76.20	9.1248 231.861	9.1261 231.894	+0/-.0015 +0/-.038	.25 6	0.12 3	840	83,900 373,187	332,000 1,476,736	19.32 8.76
GR 124	7.7500 196.9	+0/-.0010 +0/-.025	9.6250 244.6	+0/-.0012 +0/-.030	3.000 76.20	6.6250 168.341	6.6265 168.379	+0/-.0020 +0/-.051	.25 6	0.12 3	770	86,200 383,418	355,000 1,579,040	19.80 8.97
GR 132	8.2500 209.6	+0/-.0010 +0/-.025	10.1250 257.3	+0/-.0012 +0/-.030	3.000 76.20	10.1250 257.276	10.1265 257.314	+0/-.0020 +0/-.051	.25 6	0.12 3	730	88,700 394,538	378,000 1,681,344	21.63 9.81
GR 140	8.7500 222.3	+0/-.0010 +0/-.025	10.6250 270.0	+0/-.0014 +0/-.036	3.000 76.20	10.6250 269.981	10.6265 270.019	+0/-.0020 +0/-.051	.25 6	0.16 4	690	91,500 406,992	401,000 1,783,648	22.73 10.31
GR 148	9.2500 235.0	+0/-.0010 +0/-.025	11.1250 282.7	+0/-.0014 +0/-.036	3.000 76.20	11.1250 282.686	11.1265 282.724	+0/-.0020 +0/-.051	.25 6	0.16 4	650	93,500 415,888	423,000 1,881,504	24.00 10.88

For sealed bearings, Outside diameter may be slightly oversize due to seal press fit.
For DS matching as DS suffix to part number
* For bearing properly filled with #1 grease reduce speed by 50%

Metric dimensions for reference only.
Not all parts are available from stock. Please contact customer service for availability (800) 626-2120.
For more information on bearing capabilities outside of our standard offering, please contact Application Engineering (800) 626-2093.

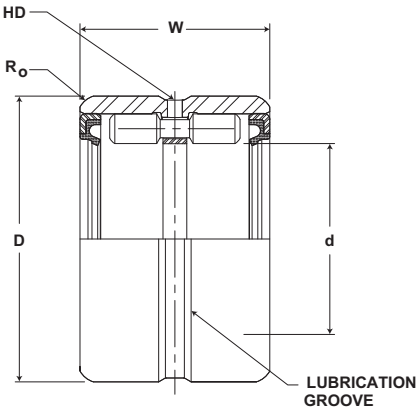

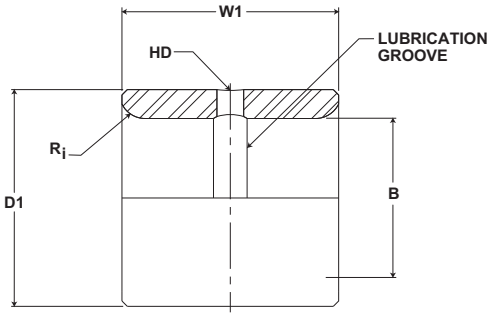

GR SERIES (continued)

Part No.		B		D1		W1	HD	Ri	Recommended Shaft Diameter with inner ring			Inner Weight
Outer Ring & Roller Assembly	Separable Inner Ring Only	Bore Diameter		Outside Diameter		Width	Radial Lub. Hole Diameter	Max Shaft Radius to Clear				
		inch mm		inch mm		inch mm			inch mm			lb kg
		Nom	Tol.	Nom	Tol.	Tol +0/-.005 (+0/.13)	(Ref)	(Ref)	Rotating	Stationary	Tol.	
GR 64 SS, S, RS, SRS, RSS	MI 54	3.3750 85.759	+0/-.0008 +0/-.020	3.9985 101.602	+0/-.0009 +0/-.023	2.010 51.07	0.25 6	0.10 3	3.3760 85.8	3.3746 85.7	+0/-.0010 +0/-.025	2.04 .93
GR 64	MI 56	3.5000 88.935	+0/-.0008 +0/-.020	3.9985 101.602	+0/-.0009 +0/-.023	2.010 51.07	0.25 6	0.10 3	3.5010 89.0	3.4996 88.9	+0/-.0010 +0/-.025	1.63 .74
GR 68 SS, S, RS, SRS, RSS	MI 58	3.6250 92.111	+0/-.0008 +0/-.020	4.2485 107.954	+0/-.0009 +0/-.023	2.010 51.07	0.25 6	0.10 3	3.6260 92.1	3.6246 92.1	+0/-.0010 +0/-.025	1.70 .77
GR 68	MI 60	3.7500 95.288	+0/-.0008 +0/-.020	4.2485 107.954	+0/-.0009 +0/-.023	2.010 51.07	0.25 6	0.10 3	3.7510 95.3	3.7496 95.3	+0/-.0010 +0/-.025	1.75 .79
GR 72	MI 62	3.8750 98.464	+0/-.0008 +0/-.020	4.4985 114.307	+0/-.0009 +0/-.023	2.260 57.43	0.25 6	0.10 3	3.8760 98.5	3.8746 98.5	+0/-.0010 +0/-.025	3.25 1.47
GR 80	MI 64	4.0000 101.640	+0/-.0008 +0/-.020	4.9985 127.012	+0/-.0010 +0/-.025	2.260 57.43	0.25 6	0.10 3	4.0010 101.7	3.9996 101.6	+0/-.0010 +0/-.025	4.38 1.99
	MI 68	4.2500 107.993	+0/-.0008 +0/-.020	4.9985 127.012	+0/-.0010 +0/-.025	2.260 57.43	0.25 6	0.10 3	4.2510 108.0	4.2496 108.0	+0/-.0010 +0/-.025	5.24 2.37
GR 88 N	MI 72 N	4.5000 114.345	+0/-.0008 +0/-.020	5.4985 139.717	+0/-.0010 +0/-.025	2.515 63.91	0.25 6	0.10 3	4.5010 114.4	4.4996 114.3	+0/-.0010 +0/-.025	5.43 2.47
GR 88	MI 72	4.5000 114.345	+0/-.0008 +0/-.020	5.4985 139.717	+0/-.0010 +0/-.025	3.015 76.61	0.25 6	0.10 3	4.5010 114.4	4.4996 114.3	+0/-.0010 +0/-.025	5.97 2.71
GR 96 N	MI 80 N	5.0000 127.050	+0/-.0010 +0/-.025	5.9983 152.417	+0/-.0010 +0/-.025	2.515 63.91	0.31 8	0.12 3	5.0010 127.1	4.9995 127.0	+0/-.0010 +0/-.025	5.97 2.71
GR 96	MI 80	5.0000 127.050	+0/-.0010 +0/-.025	5.9983 152.417	+0/-.0010 +0/-.025	3.015 76.61	0.31 8	0.12 3	5.0010 127.1	4.9995 127.0	+0/-.0010 +0/-.025	7.12 3.23
GR 104 N	MI 88 N	5.5000 139.755	+0/-.0010 +0/-.025	6.4983 165.122	+0/-.0010 +0/-.025	2.515 63.91	0.31 8	0.12 3	5.5010 139.8	5.4995 139.7	+0/-.0010 +0/-.025	6.30 2.88
GR 104	MI 88	5.5000 139.755	+0/-.0010 +0/-.025	6.4983 165.122	+0/-.0010 +0/-.025	3.015 76.61	0.31 8	0.12 3	5.5010 139.8	5.4995 139.7	+0/-.0010 +0/-.025	7.56 3.43
GR 116	MI 96	6.0000 152.460	+0/-.0010 +0/-.025	7.2481 184.174	+0/-.0012 +0/-.030	3.015 76.61	0.31 8	0.12 3	6.0012 152.5	5.9995 152.4	+0/-.0012 +0/-.030	11.06 5.03
GR 124	MI 104	6.5000 165.165	+0/-.0010 +0/-.025	7.7481 196.879	+0/-.0012 +0/-.030	3.015 76.61	0.31 8	0.12 3	6.5012 165.2	6.4995 165.2	+0/-.0012 +0/-.030	11.99 5.39
GR 132	MI 112	7.0000 177.870	+0/-.0010 +0/-.025	8.2481 209.584	+0/-.0012 +0/-.030	3.015 76.61	0.31 8	0.12 3	7.0012 177.9	6.9995 177.9	+0/-.0012 +0/-.030	12.70 5.77
GR 140	MI 120	7.5000 190.575	+0/-.0012 +0/-.030	8.7480 222.287	+0/-.0012 +0/-.030	3.015 76.61	0.31 8	0.16 4	7.5012 190.6	7.4995 190.6	+0/-.0012 +0/-.030	13.60 6.17
GR 148	MI 128	8.0000 203.280	+0/-.0012 +0/-.030	9.2480 234.992	+0/-.0012 +0/-.030	3.015 76.61	0.31 8	0.16 4	8.0012 203.3	7.9995 203.3	+0/-.0012 +0/-.030	14.40 6.55

McGill Machined Inner Ring

Precision ground inner ring provides a hardened raceway for the rollers when used with an unhardened shaft. The ring contains an oil hole and annular groove for relubrication of the bearing and can be used with both CAGEROL and GUIDEROL bearings or can be utilized as a bushing in plain bearing applications.

Basic Construction Type: Thru Hardened Precision Ground Rings

Ring Material: Bearing Quality Steel

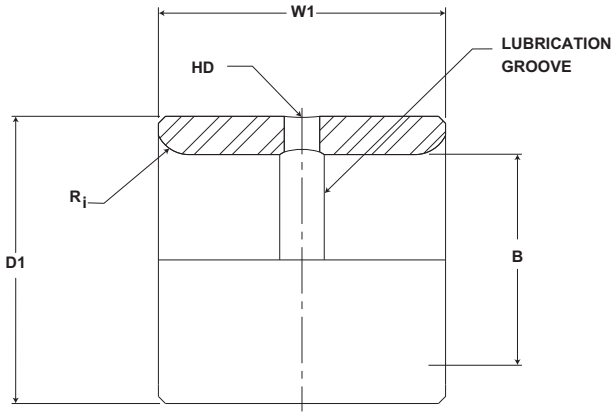

MI Series

Part No.	Military No.	B Bore Diameter inch mm		D1 Outside Diameter inch mm		W1 Width inch mm	Ri Inner Ring Corner inch mm	Recommended Shaft Diameter with Inner Ring inch mm			Inner Weight lb kg
Inner Ring		Nom	Tol.	Nom	Tol.	Tol +0/-.005 (+0/.13)	(Ref)	Rotating	Stationary	Tol.	
MI 6 N	MS 51962-1	.3750 9.5	+0/-.0004 +0/-.010	.6245 15.9	+0/-.0004 +0/-.010	.760 19.3	.25 6	.3755 9.5	.3747 9.5	+0/-.0005 +0/-.013	.05 .02
MI 6						1.010 25.7	.25 6	.3755 9.5	.3747 9.5	+0/-.0005 +0/-.013	.05 .02
MI 7 N		.4375 11.1	+0/-.0004 +0/-.010	.6245 15.9	+0/-.0004 +0/-.010	.760 19.3	.25 6	.4380 11.1	.4372 11.1	+0/-.0005 +0/-.013	.04 .02
MI 8 N	MS 51962-2	.5000 12.7	+0/-.0004 +0/-.010	.7493 19.0	+0/-.0005 +0/-.013	.760 19.3	.40 10	.5005 12.7	.4997 12.7	+0/-.0005 +0/-.013	.04 .02
MI 8	MS 51962-3					1.010 25.7	.40 10	.5005 12.7	.4997 12.7	+0/-.0005 +0/-.013	.06 .03
MI 9 N		.5625 14.3	+0/-.0004 +0/-.010	.7493 19.0	+0/-.0005 +0/-.013	.760 19.3	.40 10	.5630 14.3	.5622 14.3	+0/-.0005 +0/-.013	.04 .02
MI 10		.6250 15.9	+0/-.0004 +0/-.010	.8743 22.2	+0/-.0005 +0/-.013	1.010 25.7	.40 10	.6255 15.9	.6247 15.9	+0/-.0005 +0/-.013	.08 .04
MI 10 N	MS 51962-4					.760 19.3	.40 10	.6255 15.9	.6247 15.9	+0/-.0005 +0/-.013	.06 .03
MI 11 N		.6875 17.5	+0/-.0004 +0/-.010	.8743 22.2	+0/-.0005 +0/-.013	.760 19.3	.40 10	.6880 17.5	.6872 17.5	+0/-.0005 +0/-.013	.05 .02
MI 12 N	MS 51962-5	.7500 19.1	+0/-.0004 +0/-.010	.9993 25.4	+0/-.0005 +0/-.013	.760 19.3	.40 10	.7505 19.1	.7497 19.0	+0/-.0005 +0/-.013	.07 .03
MI 12						1.010 25.7	.40 10	.7505 19.1	.7497 19.0	+0/-.0005 +0/-.013	.10 .05
MI 13 N	MS 51962-6	.8125 20.6	+0/-.0005 +0/-.013	.9993 25.4	+0/-.0005 +0/-.013	.760 19.3	.40 10	.8129 20.7	.8121 20.6	+0/-.0005 +0/-.013	.07 .03
MI 13	MS 51962-7					1.010 25.7	.40 10	.8130 20.7	.8122 20.6	+0/-.0005 +0/-.013	.11 .05
MI 14 N	MS 51962-8	.8750 22.2	+0/-.0005 +0/-.013	1.124 28.6	+0/-.0005 +0/-.013	1.010 25.7	.40 10	.8754 22.2	.8746 22.2	+0/-.0005 +0/-.013	.11 .05
MI 14						1.260 32.0	.40 10	.8755 22.2	.8747 22.2	+0/-.0005 +0/-.013	.13 .06
MI 14 N	MS 51962-8	.8750 22.2	+0/-.0005 +0/-.013	1.124 28.6	+0/-.0005 +0/-.013	1.010 25.7	.40 10	.9379 23.8	.9371 23.8	+0/-.0005 +0/-.013	.11 .05
MI 15						1.260 32.0	.40 10	.9380 23.8	.9372 23.8	+0/-.0005 +0/-.013	.12 .05

Metric dimensions for reference only.
Not all parts are available from stock. Please contact customer service for availability (800) 626-2120.
For more information on bearing capabilities outside of our standard offering, please contact Application Engineering (800) 626-2093.

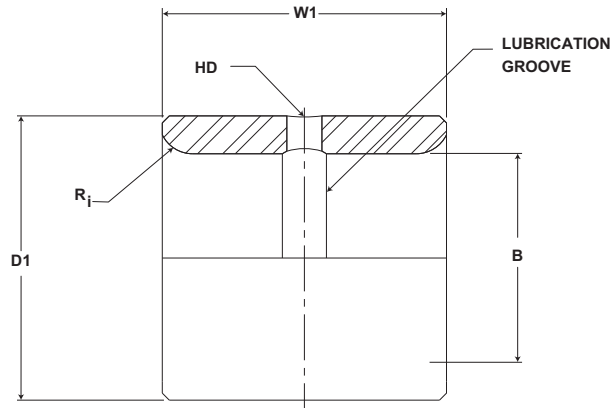

MI Series

Part No.	Military No.	B Bore Diameter inch mm Nom	B Bore Diameter inch mm Tol.	D1 Outside Diameter inch mm Nom	D1 Outside Diameter inch mm Tol.	W1 Width inch mm Tol +0/-.005 (+0/.13)	Ri Inner Ring Corner inch mm (Ref)	Recommended Shaft Diameter with Inner Ring inch mm Rotating	Recommended Shaft Diameter with Inner Ring inch mm Stationary	Recommended Shaft Diameter with Inner Ring inch mm Tol.	Inner Weight lb kg
MI 16 N	MS 51962-10	1.000 25.4	+0/-.0005 +0/-.013	1.249 31.7	+0/-.0006 +0/-.015	1.010 25.7	.40 10	1.0004 25.4	.9996 25.4	+0/-.0005 +0/-.013	.13 .06
MI 16	MS 51962-11					1.260 32.0	.40 10	1.001 25.4	1.000 25.4	+0/-.0005 +0/-.013	.16 .07
MI 17		1.063 27.0	+0/-.0005 +0/-.013	1.374 34.9	+0/-.0006 +0/-.015	1.260 32.0	.40 10	1.063 27.0	1.0621 27.0	+0/-.0005 +0/-.013	.16 .07
MI 18 N	MS 51962-12	1.125 28.6	+0/-.0005 +0/-.013	1.374 34.9	+0/-.0006 +0/-.015	1.010 25.7	.40 10	1.1255 28.6	1.1246 28.6	+0/-.0005 +0/-.013	.14 .06
MI 18	MS 51962-13					1.260 32.0	.40 10	1.126 28.6	1.125 28.6	+0/-.0005 +0/-.013	.17 .08
MI 19	MS 51962-14	1.188 30.2	+0/-.0005 +0/-.013	1.499 38.1	+0/-.0006 +0/-.015	1.260 32.0	.06 2	1.188 30.2	1.1871 30.2	+0/-.0005 +0/-.013	.24 .11
MI 20 N	MS 51962-15	1.250 31.8	+0/-.0005 +0/-.013	1.499 38.1	+0/-.0006 +0/-.015	1.010 25.7	.06 2	1.2505 31.8	1.2496 31.8	+0/-.0005 +0/-.013	.19 .09
MI 20	MS 51962-16					1.260 32.0	.06 2	1.251 31.8	1.250 31.8	+0/-.0005 +0/-.013	.22 .09
MI 21 N	MS 51962-17	1.313 33.4	+0/-.0005 +0/-.013	1.624 41.3	+0/-.0006 +0/-.015	1.010 25.7	.06 2	1.313 33.4	1.3121 33.3	+0/-.0005 +0/-.013	.20 .09
MI 21						1.260 32.0	.06 2	1.313 33.4	1.312 33.3	+0/-.0005 +0/-.013	.26 .12
MI 22 4S	MS 51962-18	1.375 34.9	+0/-.0005 +0/-.013	1.624 41.3	+0/-.0006 +0/-.015	1.260 32.0	.06 2	1.3755 35.0	1.3746 34.9	+0/-.0005 +0/-.013	.20 .09
MI 22	MS 51962-19			1.749 44.4	+0/-.0006 +0/-.015	1.260 32.0	.06 2	1.376 35.0	1.375 34.9	+0/-.0005 +0/-.013	.26 .12
MI 23	MS 51962-20	1.438 36.5	+0/-.0005 +0/-.013	1.749 44.4	+0/-.0006 +0/-.015	1.260 32.0	.06 2	1.438 36.5	1.4371 36.5	+0/-.0005 +0/-.013	.27 .12
MI 24 N	MS 51962-21	1.500 38.1	+0/-.0005 +0/-.013	1.749 44.4	+0/-.0006 +0/-.015	1.010 25.7	.06 2	1.5005 38.1	1.4996 38.1	+0/-.0005 +0/-.013	.22 .09
MI 24	MS 51962-22					1.260 32.0	.06 2	1.501 38.1	1.500 38.1	+0/-.0005 +0/-.013	.22 .09
MI 25 4S		1.563 39.7	+0/-.0005 +0/-.013	1.874 47.6	+0/-.0006 +0/-.015	1.260 32.0	.06 2	1.563 39.7	1.5621 39.7	+0/-.0005 +0/-.013	.27 .12
MI 25				1.999 50.8	+0/-.0007 +0/-.018	1.260 32.0	.06 2	1.563 39.7	1.562 39.7	+0/-.0005 +0/-.013	.30 .14
MI 26 N	MS 51962-23	1.625 41.3	+0/-.0005 +0/-.013	1.999 50.8	+0/-.0007 +0/-.018	1.010 25.7	.06 2	1.6255 41.3	1.6246 41.3	+0/-.0005 +0/-.013	.30 .14
MI 26						1.260 32.0	.06 2	1.6255 41.3	1.6246 41.3	+0/-.0005 +0/-.013	.38 .17
MI 26 2S				1.936 49.2	0/-.0007 +0/-.018	1.260 32.0	.06 2	1.6255 41.3	1.625 41.3	+0/-.0005 +0/-.013	.30 .14
MI 27 N		1.688 42.9	+0/-.0005 +0/-.013	1.999 50.8	+0/-.0007 +0/-.018	1.010 25.7	.06 2	1.688 42.9	1.6871 42.9	+0/-.0005 +0/-.013	.30 .14
MI 27						1.260 32.0	.06 2	1.688 42.9	1.687 42.9	+0/-.0005 +0/-.013	.32 .15

McGILL® Machined Inner Rings

Basic Construction Type: Thru Hardened Precision Ground Rings

Bearing Material: Bearing Quality Steel

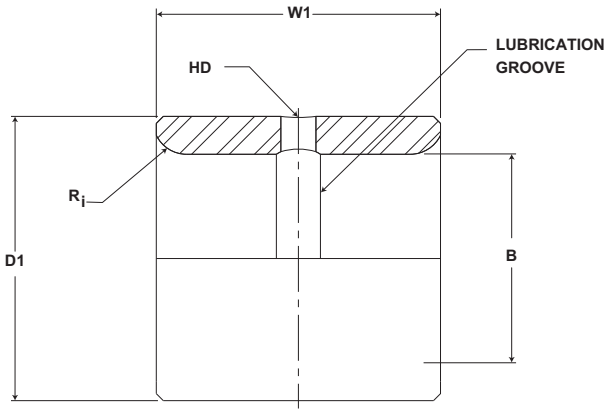

MI Series (continued)

Part No.	Military No.	B Bore Diameter		D1 Outside Diameter		W1 Width	Ri Inner Ring Corner	Recommended Shaft Diameter with Inner Ring			Inner Weight
		inch mm		inch mm		inch mm		inch mm			lb kg
Inner Ring		Nom	Tol.	Nom	Tol.	Tol +0/-.005 (+0/.13)	(Ref)	Rotating	Stationary	Tol.	
MI 27 N		1.688 42.9	+0/-.0005 +0/-.013	1.999 50.8	+0/-.0007 +0/-.018	1.010 25.7	.06 2	1.688 42.9	1.6871 42.9	+0/-.0005 +0/-.013	.32 .15
MI 28	MS 51962-25					1.760 44.7	.06 2	1.751 44.5	1.750 44.5	+0/-.0005 +0/-.013	.63 .29
MI 30		1.875 47.6	+0/-.0005 +0/-.013	2.249 57.1	+0/-.0007 +0/-.018	1.760 44.7	.06 2	1.8755 47.7	1.8746 47.6	+0/-.0005 +0/-.013	.85 .39
MI 31	MS 51962-26	1.938 49.2	+0/-.0005 +0/-.013	2.249 57.1	+0/-.0007 +0/-.018	1.510 38.4	.08 2	1.938 49.2	1.9371 49.2	+0/-.0005 +0/-.013	.97 .43
MI 32 N	MS 51962-27	2.000 50.8	+0/-.0005 +0/-.013	2.249 57.1	+0/-.0007 +0/-.018	1.510 38.4	.08 2	2.0005 50.8	1.9996 50.8	+0/-.0005 +0/-.013	.74 .33
MI 32						1.760 44.7	.08 2	2.001 50.8	2.000 50.8	+0/-.0005 +0/-.013	.87 .39
MI 34		2.125 54.0	+0/-.0006 +0/-.015	2.249 57.1	+0/-.0007 +0/-.018	1.760 44.7	.08 2	2.1258 54.0	2.1247 54.0	+0/-.0008 +0/-.020	1.00 .45
MI 35	MS 51962-28	2.188 55.6	+0/-.0006 +0/-.015	2.749 69.8	+0/-.0007 +0/-.018	1.510 38.4	.08 2	2.1883 55.6	2.1872 55.6	+0/-.0008 +0/-.020	1.06 .48
MI 36 N	MS 51962-29	2.250 57.2	+0/-.0006 +0/-.015	2.749 69.8	+0/-.0007 +0/-.018	1.510 38.4	.08 2	2.2508 57.2	2.2497 57.2	+0/-.0008 +0/-.020	.83 .37
MI 36						1.760 44.7	.08 2	2.2508 57.2	2.2497 57.2	+0/-.0008 +0/-.020	.97 .44
MI 38	MS 51962-30	2.375 60.3	+0/-.0006 +0/-.015	2.999 76.2	+0/-.0007 +0/-.018	1.760 44.7	.08 2	2.3758 60.4	2.3747 60.3	+0/-.0008 +0/-.020	1.28 .58
MI 39		2.438 61.9	+0/-.0006 +0/-.015	2.999 76.2	+0/-.0007 +0/-.018	1.510 38.4	.08 2	2.4383 62.0	2.4372 61.9	+0/-.0008 +0/-.020	1.05 .47
MI 40 N	MS 51962-31	2.500 63.5	+0/-.0006 +0/-.015	2.999 76.2	+0/-.0007 +0/-.018	1.510 38.4	.08 2	2.5008 63.5	2.4997 63.5	+0/-.0008 +0/-.020	.92 .43
MI 40						1.760 44.7	.08 2	2.501 63.5	2.500 63.5	+0/-.0008 +0/-.020	1.07 .48
MI 42		2.625 66.7	+0/-.0006 +0/-.015	3.249 82.5	+0/-.0009 +0/-.023	1.760 44.7	.08 2	2.6258 66.7	2.6247 66.7	+0/-.0008 +0/-.020	1.12 .51
MI 44	MS 51962-32	2.750 69.9	+0/-.0006 +0/-.015	3.249 82.5	+0/-.0009 +0/-.023	1.760 44.7	.08 2	2.7508 69.9	2.7497 69.9	+0/-.0008 +0/-.020	1.17 .53
MI 46		2.875 73.1	+0/-.0006 +0/-.015	3.499 88.9	+0/-.0009 +0/-.023	2.010 51.1	.08 2	2.8758 73.1	2.8747 73.0	+0/-.0008 +0/-.020	1.30 .59
MI 47	MS 51962-34	2.938 74.6	+0/-.0006 +0/-.015	3.499 88.9	+0/-.0009 +0/-.023	2.010 51.1	.08 2	2.9383 74.7	2.9372 74.6	+0/-.0008 +0/-.020	1.58 .72
MI 48 N		3.000 76.2	+0/-.0006 +0/-.015	3.499 88.9	+0/-.0009 +0/-.023	1.760 44.7	.08 2	3.0008 76.3	2.9997 76.2	+0/-.0008 +0/-.020	1.32 .59
MI 48						2.010 51.1	.08 2	3.001 76.3	3.000 76.2	+0/-.0008 +0/-.020	1.43 .65
MI 50	MS 51962-35	3.125 79.4	+0/-.0006 +0/-.015	3.749 95.3	+0/-.0009 +0/-.023	2.010 51.1	.10 3	3.126 79.4	3.1246 79.4	+0/-.0010 +0/-.025	1.88 .85
MI 52	MS 51962-36	3.250 82.6	+0/-.0006 +0/-.015	3.749 95.3	+0/-.0009 +0/-.023	2.010 51.1	.10 3	3.251 82.6	3.2496 82.6	+0/-.0010 +0/-.025	1.52 .69

Metric dimensions for reference only.
Not all parts are available from stock. Please contact customer service for availability (800) 626-2120.
For more information on bearing capabilities outside of our standard offering, please contact Application Engineering (800) 626-2093.

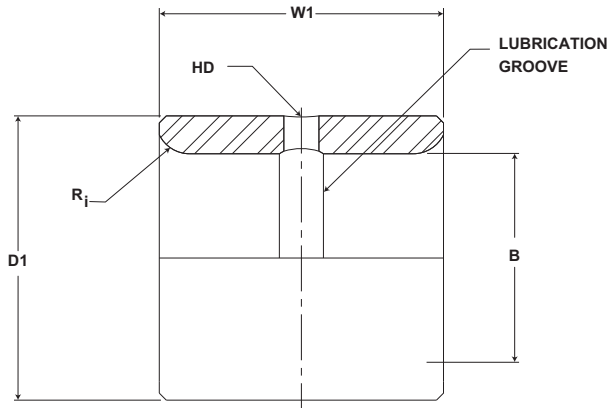

MI Series (continued)

Part No.	Military No.	B		D1		W1	Ri	Recommended Shaft Diameter with Inner Ring			Inner Weight
		Bore Diameter		Outside Diameter		Width	Inner Ring Corner				
		inch mm		inch mm		inch mm		inch mm			lb kg
Inner Ring		Nom	Tol.	Nom	Tol.	Tol +0/-.005 (+0/.13)	(Ref)	Rotating	Stationary	Tol.	
MI 54	MS 51962-38	3.375 85.8	+0/-.0008 +0/-.020	3.999 101.6	+0/-.0009 +0/-.023	2.010 51.1	.10 3	3.3758 85.8	3.3746 85.7	+0/-.0010 +0/-.025	2.04 .93
MI 56		3.500 88.9	+0/-.0008 +0/-.020	3.999 101.6	+0/-.0009 +0/-.023	2.010 51.1	.10 3	3.5008 89.0	3.4996 88.9	+0/-.0010 +0/-.025	1.63 .74
MI 56 8G				4.249 108.0	+0/-.0009 +0/-.023	2.010 51.1	.10 3	3.501 89.0	3.500 88.9	+0/-.0010 +0/-.025	1.67 .75
MI 58		3.625 92.1	+0/-.0008 +0/-.020	4.249 108.0	+0/-.0009 +0/-.023	2.010 51.1	.10 3	3.6258 92.1	3.6246 92.1	+0/-.0010 +0/-.025	1.70 .77
MI 60	MS 51962-40	3.750 95.3	+0/-.0008 +0/-.020	4.249 108.0	+0/-.0009 +0/-.023	2.010 51.1	.10 3	3.7508 95.3	3.7496 95.3	+0/-.0010 +0/-.025	1.75 .79
MI 62		3.875 98.5	+0/-.0008 +0/-.020	4.499 114.3	+0/-.0009 +0/-.023	2.260 57.4	.10 3	3.876 98.5	3.875 98.5	+0/-.0010 +0/-.025	3.25 1.47
MI 64		4.000 101.6	+0/-.0008 +0/-.020	4.999 127.0	+0/-.0010 +0/-.025	2.260 57.4	.10 3	4.001 101.7	4.000 101.6	+0/-.0010 +0/-.025	4.38 1.99
MI 68		4.250 108.0	+0/-.0008 +0/-.020	4.999 127.0	+0/-.0010 +0/-.025	2.260 57.4	.10 3	4.251 108.0	4.250 108.0	+0/-.0010 +0/-.025	5.24 2.37
MI 72 N	MS 51962-43	4.500 114.3	+0/-.0008 +0/-.020	5.499 139.7	+0/-.0010 +0/-.025	2.515 63.9	.10 3	4.501 114.4	4.500 114.3	+0/-.0010 +0/-.025	5.43 2.47
MI 72	MS 51962-44					3.015 76.6	.10 3	4.501 114.4	4.500 114.3	+0/-.0010 +0/-.025	5.97 2.71
MI 80 N	MS 51962-46	5.000 127.1	+0/-.0010 +0/-.025	5.998 152.4	+0/-.0010 +0/-.025	2.515 63.9	.12 3	5.001 127.1	5.000 127.0	+0/-.0010 +0/-.025	5.97 2.71
MI 80						2.010 51.1	.10 3	3.501 89.0	3.500 88.9	+0/-.0010 +0/-.025	7.12 3.23
MI 88 N	MS 51962-48	5.500 139.8	+0/-.0010 +0/-.025	6.498 165.1	+0/-.0010 +0/-.025	2.515 63.9	.12 3	5.501 139.8	5.500 139.7	+0/-.0010 +0/-.025	6.30 2.88
MI 88	MS 51962-49					3.015 76.6	.12 3	5.501 139.8	5.500 139.7	+0/-.0010 +0/-.025	7.56 3.54
MI 96	MS 51962-50	6.000 152.5	+0/-.0010 +0/-.025	7.248 184.2	+0/-.0012 +0/-.030	3.015 76.6	.12 3	6.001 152.5	6.000 152.4	+0/-.0012 +0/-.030	11.06 5.03
MI 104		6.500 165.2	+0/-.0010 +0/-.025	7.748 196.9	+0/-.0012 +0/-.030	3.015 76.6	.12 3	6.501 165.2	6.500 165.2	+0/-.0012 +0/-.030	11.90 5.39
MI 112		7.000 177.9	+0/-.0010 +0/-.025	8.248 209.6	+0/-.0012 +0/-.030	3.015 76.6	.12 3	7.001 177.9	7.000 177.9	+0/-.0012 +0/-.030	12.70 5.77
MI 120		7.500 190.6	+0/-.0012 +0/-.030	8.748 222.3	+0/-.0012 +0/-.030	3.015 76.6	.16 4	7.501 190.6	7.500 190.6	+0/-.0012 +0/-.030	13.60 6.17
MI 128		8.000 203.3	+0/-.0012 +0/-.030	9.248 235.0	+0/-.0012 +0/-.030	3.015 76.6	.16 4	8.001 203.3	8.000 203.3	+0/-.0012 +0/-.030	14.40 6.55

McGill MULTI-ROL Needle Bearings

Full complement needle bearing provides high radial load rating with good shaft support, angular rigidity, and is dimensionally equivalent to most plain bearings with bronze or babbitt bushing. Available in both single and two row designs with non separable inner race and metallic shields for pure radial load applications. The angular lube groove provides a circumferential path to direct lubricant to the oil hole.

Basic Construction Type: Full Complement Machined Race Needle Bearing and Non Separable Inner Ring

Rolling Elements: Single Row Precision Ground Needle

Bearing Material: Bearing Quality Steel

Seal Type: Metallic Shield

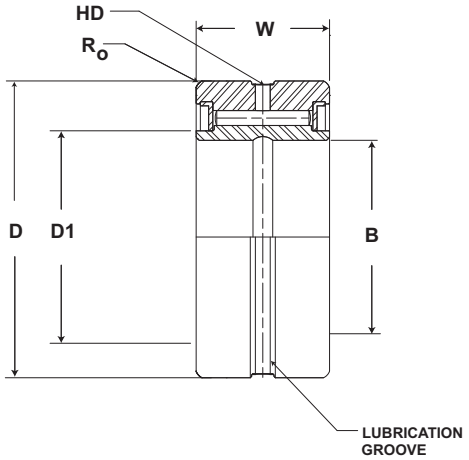

RS Series

Part No.	B		D		W	Housing Bore Diameter			HD	Ro	Limiting Speed (In Oil)*	Basic Dynamic Rating	Basic Static Rating	Weight
Single Row	Bore Diameter		Outside Diameter		Width				Radial Lub. Hole Diameter	Max Hsg Radius to Clear				
	inch mm		inch mm		inch mm	inch mm			inch mm		RPM	lb/N	lb/N	lb kg
	Nom	Tol.	Nom	Tol.	Tol +0/-.005 (+0/.13)	Rotating	Stationary	Tol.	(Ref)	(Ref)				
RS 6	.7500 19.058	+0/-.0004 +0/-.010	1.5000 38.115	+0/-.0005 +0/-.013	.8750 22.234	1.5000 38.115	1.5005 38.128	.0007 0.018	.1250 3.176	.0313 0.794	5,000	3850 17,125	11500 51,152	.26 .12
RS 7	.8750 22.234	+0/-.0005 +0/-.013	1.6250 41.291	+0/-.0005 +0/-.013	1.0000 25.410	1.6250 41.291	1.6255 41.304	.0007 0.018	.1250 3.176	.0313 0.794	4,400	5560 24,731	15550 69,166	.34 .15
RS 8	1.0000 25.410	+0/-.0005 +0/-.013	1.8125 46.056	+0/-.0005 +0/-.013	1.0625 26.998	1.8125 46.056	1.8130 46.068	.0007 0.018	.1250 3.176	.0313 0.794	4,000	6170 27,444	18700 83,178	.42 .19
RS 9	1.1250 28.586	+0/-.0005 +0/-.013	1.9375 49.232	+0/-.0005 +0/-.013	1.0625 26.998	1.9375 49.232	1.9875 50.502	.0007 0.018	.1250 3.176	.0313 0.794	3,600	6500 28,912	20500 91,184	.46 .21
RS 10	1.2500 31.763	+0/-.0005 +0/-.013	2.0625 52.408	+0/-.0006 +0/-.015	1.0625 26.998	2.0625 52.408	2.0630 52.421	.0007 0.018	.1250 3.176	.0313 0.794	3,300	6830 30,380	22400 99,635	.49 .22
RS 12	1.5000 38.115	+0/-.0005 +0/-.013	2.5000 63.525	+0/-.0006 +0/-.015	1.1250 28.586	2.5000 63.525	2.5005 63.538	.0007 0.018	.1250 3.176	.0625 1.588	2,900	7740 34,428	27500 122,320	.83 .37
RS 14	1.7500 44.468	+0/-.0005 +0/-.013	2.7500 69.878	+0/-.0006 +0/-.015	1.1250 28.586	2.7500 69.878	2.7505 69.890	.0007 0.018	.1250 3.176	.0625 1.588	2,500	8330 37,052	31400 139,667	.93 .42
RS 16	2.0000 50.820	+0/-.0005 +0/-.013	3.2500 82.583	+0/-.0006 +0/-.015	1.1875 30.174	3.2499 82.580	3.2505 82.595	.0007 0.018	.1250 3.176	.0625 1.588	2,000	9820 43,679	42200 187,706	1.45 .66
RS 20	2.5000 63.525	+0/-.0006 +0/-.015	3.7500 95.288	+0/-.0008 +0/-.020	1.2500 31.763	3.7498 95.282	3.7507 95.305	.0010 0.025	.1875 4.764	.0938 2.382	1,700	11200 49,818	52900 235,299	1.79 .81
RS 22	2.7500 69.878	+0/-.0006 +0/-.015	4.0000 101.640	+0/-.0008 +0/-.020	1.2500 31.763	3.9998 101.635	4.0007 101.658	.0010 0.025	.1875 4.764	.0938 2.382	1,500	9920 44,124	46700 207,722	2.00 .91
RS 24	3.0000 76.230	+0/-.0006 +0/-.015	4.5000 114.345	+0/-.0008 +0/-.020	1.3750 34.939	4.4998 114.340	4.5007 114.363	.0010 0.025	.1875 4.764	.0938 2.382	1,400	14500 64,496	58100 258,429	2.88 1.31

* For bearing properly filled with #1 grease reduce speed by 50%

Metric dimensions for reference only.
Not all parts are available from stock. Please contact customer service for availability (800) 626-2120.
For more information on bearing capabilities outside of our standard offering, please contact Application Engineering (800) 626-2093.

Basic Construction Type: Full Complement Machined Race Needle Bearing and Non Separable Inner Ring

Rolling Elements: Double Row Precision Ground Needle

Bearing Material: Bearing Quality Steel

Seal Type: Metallic Shield

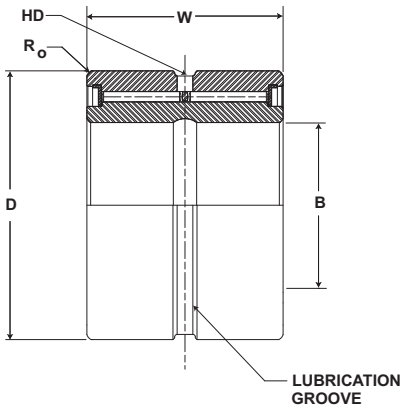

RD Series

Part No.	B		D		W	Housing Bore Diameter			HD	Ro	Limiting Speed (In Oil)*	Basic Dynamic Rating	Basic Static Rating	Weight
Single Row	Bore Diameter		Outside Diameter		Width				Radial Lub. Hole Diameter	Max Hsg Radius to Clear				
	inch mm		inch mm		inch mm	inch mm			inch mm		RPM	lb/N	lb/N	lb kg
	Nom	Tol.	Nom	Tol.	Tol +0/-.005 (+0/.13)	Rotating	Stationary	Tol.	(Ref)	(Ref)				
RD 10	1.2500 31.763	+0/-.0005 +0/-.013	2.0625 52.408	+0/-.0006 +0/-.015	2.2500 57.173	2.0625 52.408	2.0630 52.421	.0007 0.018	.1875 4.764	.0313 0.794	3,300	13600 60,493	54300 241,526	1.16 .53
RD 12	1.5000 38.115	+0/-.0005 +0/-.013	2.5000 63.525	+0/-.0006 +0/-.015	2.3750 60.349	2.5000 63.525	2.5005 63.538	.0007 0.018	.1875 4.764	.0625 1.588	2,900	15200 67,610	65700 292,234	1.83 .83
RD 14	1.7500 44.468	+0/-.0005 +0/-.013	2.7500 69.878	+0/-.0006 +0/-.015	2.3750 60.349	2.7500 69.878	2.7505 69.890	.0007 0.018	.1875 4.764	.0625 1.588	2,500	16400 72,947	75100 334,045	2.06 .93
RD 16	2.0000 50.820	+0/-.0005 +0/-.013	3.2500 82.583	+0/-.0006 +0/-.015	2.3750 60.349	3.2499 82.580	3.2505 82.595	.0007 0.018	.1875 4.764	.0625 1.588	2,000	18300 81,398	94000 418,112	3.09 1.40
RD 18	2.2500 57.173	+0/-.0005 +0/-.013	3.5000 88.935	+0/-.0008 +0/-.020	2.5000 63.525	3.4998 88.930	3.5007 88.953	.0010 0.025	.1875 4.764	.0625 1.588	1,800	19200 85,402	102600 456,365	3.57 1.62
RD 20	2.5000 63.525	+0/-.0006 +0/-.015	3.7500 95.288	+0/-.0008 +0/-.020	2.5000 63.525	3.7498 95.282	3.7507 95.305	.0010 0.025	.1875 4.764	.0938 2.382	1,700	20800 92,518	117000 520,416	3.8 1.72
RD 24	3.0000 76.230	+0/-.0006 +0/-.015	4.5000 114.345	+0/-.0008 +0/-.020	2.7500 69.878	4.4998 114.340	4.5007 114.363	.0010 0.025	.1875 4.764	.0938 2.382	1,400	29400 130,771	144500 642,736	6.14 2.78
RD 28	3.5000 88.935	+0/-.0008 +0/-.020	5.0000 127.050	+0/-.0010 +0/-.025	3.0000 76.230	5.0003 127.058	5.0011 127.078	.0015 0.038	.1875 4.764	.0938 2.382	1,250	34400 153,011	184900 822,435	7.54 3.42
RD 32	4.0000 101.640	+0/-.0008 +0/-.020	5.5000 139.755	+0/-.0010 +0/-.025	3.0000 76.230	5.5003 139.763	5.5011 139.783	.0015 0.038	.1875 4.764	.0938 2.382	1,100	34600 153,901	194600 865,581	8.29 3.76

* For bearing properly filled with #1 grease reduce speed by 50%

Rollway Journal Roller Bearings

Rollway Journal bearings feature through hardened bearing quality steel raceways, with an oil hole in the outer raceway, “trunion style” rollers, and a non-separable steel retainer (cage) assembly. The bearing design is well suited for high radial load, low speed applications. Rollway Journal bearings are available as components or complete assemblies and conform to industry dimensions and manufactured with Rollway quality standards. Depending on your preference, these bearings are available in a wide variety of sizes and options as illustrated on the pages to follow.

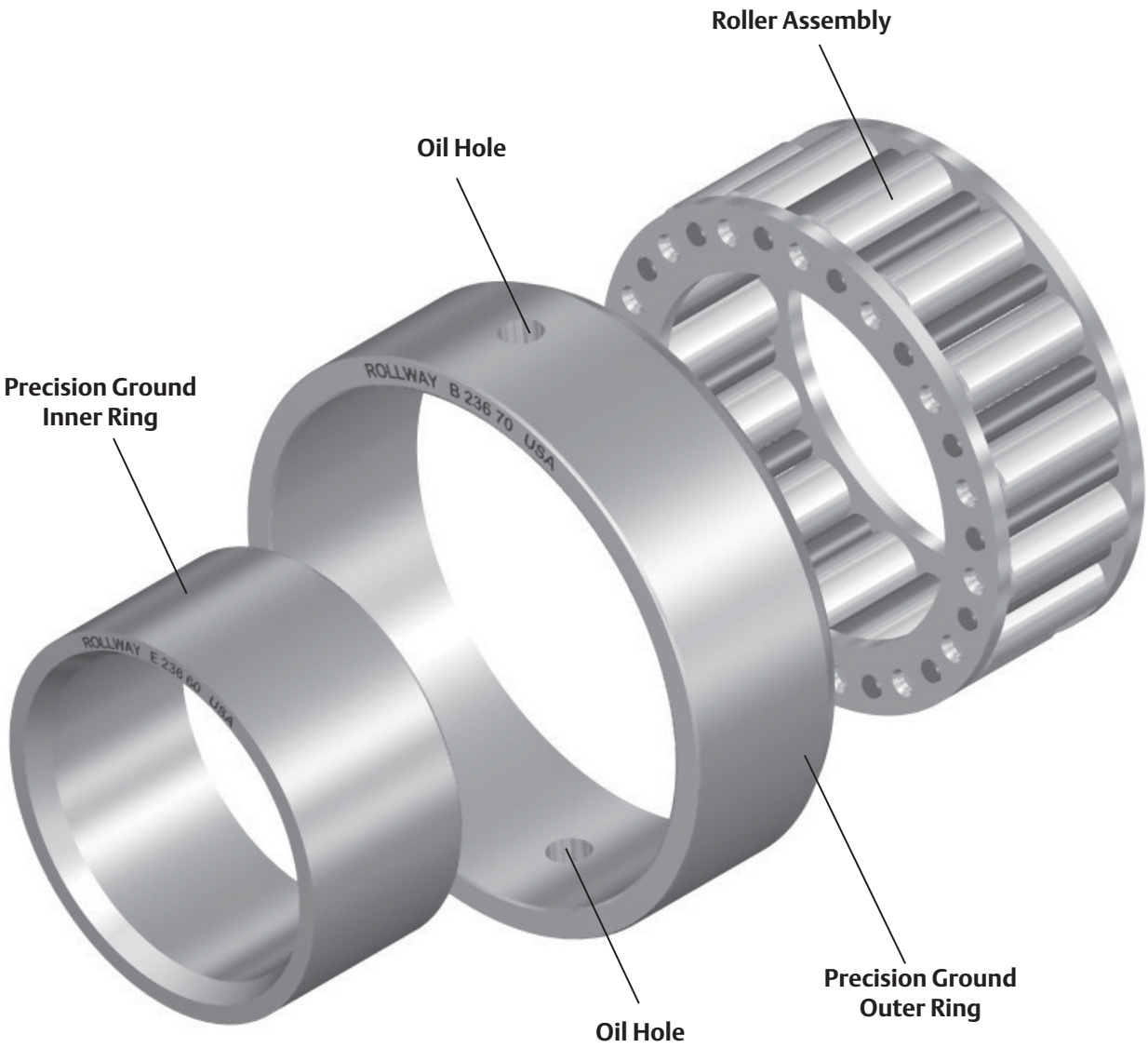

Features and Benefits

Precision Ground Races and Rollers

Races and Rollers are manufactured from high quality, bearing grade steel and are hardened to Rc 58 minimum.

Roller Assembly

Roller assemblies have flush ground ends and heavy duty built-up retainers featuring steel stay rods rigidly held between stamped steel endplates.

Oil Holes

All outer rings are supplied with oil holes in the outer race to allow lubrication.

ROLLWAY® *Journal Bearings*

Basic Construction Type: Journal Roller Bearing

Rolling Elements: Trunion Style Cylindrical Rollers

Bearing Material: Bearing Grade Quality Steel

Retainer Type: Steel Cage With Flush Ground Ends

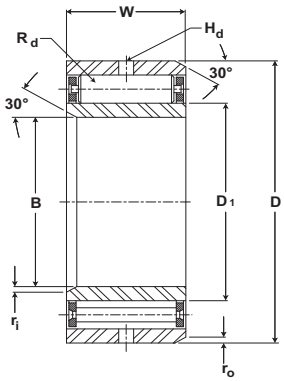

Journals

Complete Assembly Nomenclature	B	D	W	Recommended Shaft Diameter		Housing Bore Diameter	
	Bore Diameter	Outside Diameter	Width	Max	Min	Max	Min
	inch mm	inch mm	inch mm	inch mm	inch mm	inch mm	inch mm
D-305-18	0.9843 25	2.441 62	1.125 28.58	0.9850 25.02	0.9845 25.01	2.4419 62.024	2.4409 61.999
D-206-13	1.1811 30	2.441 62	0.813 20.64	1.1819 30.02	1.1814 30.01	2.4419 62.024	2.4409 61.999
D-206-18			1.125 28.58	1.1819 30.02	1.1814 30.01	2.4419 62.024	2.4409 61.999
D-207-15	1.3779 35	2.835 72.00	0.938 23.81	1.3788 35.02	1.3783 35.01	2.8357 72.027	2.8346 71.999
D-207-19			1.188 30.16	1.3788 35.02	1.3783 35.01	2.8357 72.027	2.8346 71.999
D-307		3.15 80	1.375 34.93	1.3788 35.02	1.3783 35.01	3.1508 80.030	3.1496 80.000
D-208-16	1.5748 40	3.15 80	1 25.4	1.5758 40.03	1.5752 40.01	3.1508 80.030	3.1496 80.000
D-208-22			1.375 34.93	1.5758 40.03	1.5752 40.01	3.1508 80.030	3.1496 80.000
D-209-18	1.7717 45	3.347 85	1.125 28.58	1.7728 45.03	1.7722 45.01	3.3478 85.034	3.3465 85.001
D-209-25			1.563 39.69	1.7728 45.03	1.7722 45.01	3.3478 85.034	3.3465 85.001
D-309		3.937 100	1.563 39.69	1.7728 45.03	1.7722 45.01	3.9384 100.035	3.9369 99.997
D-210-20	1.9685 50	3.543 90	1.25 31.75	1.9697 50.03	1.9691 50.02	3.5446 90.033	3.5432 89.997
D-210-28			1.75 44.45	1.9697 50.03	1.9691 50.02	3.5446 90.033	3.5432 89.997
D-210-56			3.5 88.90	1.9697 50.03	1.9691 50.02	3.5446 90.033	3.5432 89.997
D-211	2.1654 55	3.937 100	1.313 33.34	2.1666 55.03	2.1660 55.02	3.9384 100.035	3.9369 99.997
D-211-29			1.813 46.04	2.1666 55.03	2.1660 55.02	3.9384 100.035	3.9369 99.997
D-211-58			3.625 92.08	2.1666 55.03	2.1660 55.02	3.9384 100.035	3.9369 99.997
D-311		4.724 120	1.938 49.21	2.1666 55.03	2.1660 55.02	4.726 120.040	4.7243 119.997
D-212	2.3622 60	4.331 110	1.438 36.51	2.3635 60.03	2.3628 60.02	4.3322 110.038	4.3306 109.997
D-212-31			1.938 49.21	2.3635 60.03	2.3628 60.02	4.3322 110.038	4.3306 109.997
D-212-62			3.875 98.43	2.3635 60.03	2.3628 60.02	4.3322 110.038	4.3306 109.997

For sealed bearings, Outside diameter may be slightly oversize due to seal press fit.
Journal bearings and manufactured to the ABMA RBEC-1 tolerance class.
Metric dimensions for reference only.
Not all parts are available from stock. Please contact customer service for availability (800) 626-2120.
For more information on bearing capabilities outside of our standard offering, please contact Application Engineering (800) 626-2093.

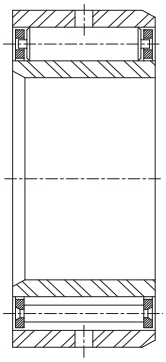

Assembly
D-XXX

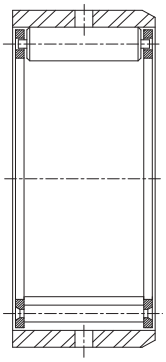

Outer Ring and Roller Assembly
B-XXX

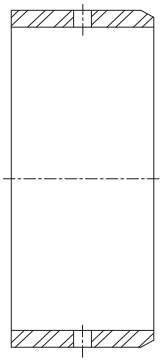

Outer Ring
B-XXX-70

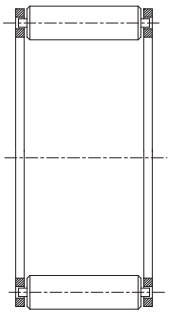

Roller Assembly
WS-XXX

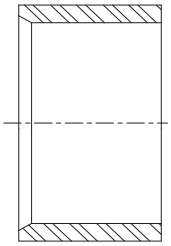

Inner Ring
E-XXX-60

Journals

D1	Rd	ri	ro	Hd Oil Hole Dia	Components Component Nomenclature			Assembly Basic Dynamic Rating	Assembly Basic Static Rating	Assembly weight
inch mm	inch mm	inch mm	inch mm	inch mm	Inner Ring	Outer Ring	Roller Assembly	lb/N	lb/N	lb kg
1.2500 31.75	0.4375 11.11	0.062 1.57	0.062 1.57	0.250 6.35	E-305-18-60	B-305-18-70	WS-305-18	8,000 35,900	12,200 54,200	1.0 0.5
1.5000 38.10	0.3125 7.94	0.062 1.57	0.062 1.57	0.265 6.73	E-206-13-60	B-206-13-70	WS-206-13	6,900 30,900	13,000 58,100	0.7 0.3
1.5000 38.10	0.3125 7.94	0.062 1.57	0.062 1.57	0.265 6.73	E-206-18-60	B-206-18-70	WS-206-18	10,000 44,400	20,800 92,700	1.0 0.5
1.7500 44.45	0.3750 9.53	0.062 1.57	0.062 1.57	0.250 6.35	E-207-15-60	B-207-15-70	WS-207-15	9,600 42,700	18,000 80,200	1.0 0.5
1.7500 44.45	0.3750 9.53	0.062 1.57	0.062 1.57	0.250 6.35	E-207-19-60	B-207-19-70	WS-207-19	12,400 55,100	24,900 111,100	1.3 0.6
1.7500 44.45	0.5000 12.75	0.062 1.57	0.078 1.98	0.250 6.35	E-307-60	B-307-70	WS-307	12,900 57,600	24,500 108,900	2.0 0.9
2.0000 50.8	0.3750 9.53	0.078 1.98	0.078 1.98	0.250 6.35	E-208-16-60	B-208-16-70	WS-208-16	10,000 44,600	19,300 85,800	1.5 0.7
2.0000 50.8	0.3750 9.53	0.078 1.98	0.078 1.98	0.250 6.35	E-208-22-60	B-208-22-70	WS-208-22	14,100 62,900	29,900 133,400	2.0 0.9
2.1870 55.55	0.3750 9.53	0.078 1.98	0.078 1.98	0.250 6.35	E-209-18-60	B-209-18-70	WS-209-18	12,600 56,000	26,500 117,900	1.8 0.8
2.1870 55.55	0.3750 9.53	0.078 1.98	0.078 1.98	0.250 6.35	E-209-25-60	B-209-25-70	WS-209-25	17,600 78,500	40,900 182,300	2.5 1.1
2.2490 57.12	0.6250 15.88	0.094 2.39	0.078 1.98	0.328 8.33	E-309-60	B-309-70	WS-309	20,200 90,200	35,500 158,200	3.6 1.6
2.3750 60.33	0.3750 9.53	0.078 1.98	0.078 1.98	0.312 7.92	E-210-20-60	B-210-20-70	WS-210-20	14,500 64,500	32,500 144,500	2.1 0.9
2.3750 60.33	0.3750 9.53	0.078 1.98	0.078 1.98	0.312 7.92	E-210-28-60	B-210-28-70	WS-210-28	20460 91011	49,400 219,900	3.0 1.4
2.3750 60.33	0.3750 9.53	0.078 1.98	0.078 1.98	0.312 7.92	E-210-56-60	B-210-56-70	WS-210-28 (X2)	35,400 157,600	102,400 455,800	5.9 2.7
2.6250 66.68	0.4375 11.11	0.078 1.98	0.078 1.98	0.312 7.92	E-211-60	B-211-70	WS-211	18,200 81,100	40,600 180,900	2.7 1.2
2.6250 66.68	0.4375 11.11	0.078 1.98	0.078 1.98	0.312 7.92	E-211-29-60	B-211-29-70	WS-211-29	25,200 112,100	61,600 274,100	3.9 1.8
2.6250 66.68	0.4375 11.11	0.078 1.98	0.078 1.98	0.312 7.92	E-211-58-60	B-211-58-70	WS-211-58	43,200 192,300	123,200 548,200	7.8 3.5
2.7500 69.85	0.6875 17.46	0.109 2.77	0.109 2.77	0.375 9.53	E-311-60	B-311-70	WS-311	31,400 139,700	62,500 278,000	6.6 3.0
2.8750 73.03	0.5000 12.75	0.094 2.39	0.094 2.39	0.312 7.92	E-212-60	B-212-70	WS-212	21,000 93,700	45,700 203,600	3.7 1.7
2.8750 73.03	0.5000 12.75	0.094 2.39	0.094 2.39	0.312 7.92	E-212-31-60	B-212-31-70	WS-212-31			5.0 2.0
2.8750 73.03	0.5000 12.75	0.094 2.39	0.094 2.39	0.328 8.33	E-212-62-60	B-212-62-70	WS-212-31 (X2)	48,900 217,700	135,400 602,200	9.9 4.5

Basic Construction Type: Journal Roller Bearing

Rolling Elements: Trunion Style Cylindrical Rollers

Bearing Material: Bearing Grade Quality Steel

Retainer Type: Steel Cage With Flush Ground Ends

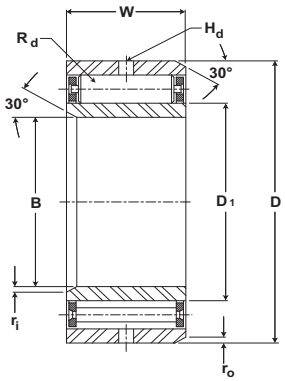

Journals (continued)

Complete Assembly Nomenclature	B Bore Diameter inch mm	D Outside Diameter inch mm	W Width inch mm	Recommended Shaft Diameter Max inch mm	Recommended Shaft Diameter Min inch mm	Housing Bore Diameter Max inch mm	Housing Bore Diameter Min inch mm
D-213	2.5591 65	4.7244 120	1.5 38.10	2.5605 65.04	2.5598 65.02	4.726 120.040	4.7243 119.997
D-213-33			2.063 52.40	2.5605 65.04	2.5598 65.02	4.726 120.040	4.7243 119.997
D-313-35		5.5118 140	2.188 55.58	2.5605 65.04	2.5598 65.02	5.5135 140.043	5.5116 139.995
D-313			2.313 58.74	2.5605 65.04	2.5598 65.02	5.5135 140.043	5.5116 139.995
D-214-26	2.7559 70	4.921 125	1.625 41.28	2.7574 70.04	2.7566 70.02	4.9229 125.042	4.9212 124.998
D-214-38			2.375 60.33	2.7574 70.04	2.7566 70.02	4.9229 125.042	4.9212 124.998
D-214-76			4.75 120.65	2.7574 70.04	2.7566 70.02	4.9229 125.042	4.9212 124.998
D-215	2.9528 75	5.118 130	1.625 41.28	2.9544 75.04	2.9536 75.02	5.1197 130.040	5.1179 129.995
D-215-28			1.75 44.45	2.9544 75.04	2.9536 75.02	5.1197 130.040	5.1179 129.995
D-215-42			2.625 66.68	2.9544 75.04	2.9536 75.02	5.1197 130.040	5.1179 129.995
D-215-84			5.25 133.35	2.9544 75.04	2.9536 75.02	5.1197 130.040	5.1179 129.995
D-315-39		6.299 160	2.438 61.91	2.9544 75.04	2.9536 75.02	6.3011 160.048	6.299 159.995
D-216	3.1496 80	5.512 140	1.75 44.45	3.1512 80.04	3.1504 80.02	5.5135 140.043	5.5116 139.995
D-216-29			1.813 46.04	3.1512 80.04	3.1504 80.02	5.5135 140.043	5.5116 139.995
D-216-42			2.625 66.68	3.1512 80.04	3.1504 80.02	5.5135 140.043	5.5116 139.995
D-216-84			5.25 133.35	3.1512 80.04	3.1504 80.02	5.5135 140.043	5.5116 139.995
D-316		6.693 170	2.688 68.26	3.1512 80.04	3.1504 80.02	6.6948 170.048	6.6926 169.992
D-217	3.3465 85	5.906 150	1.938 49.21	3.3482 85.04	3.3474 85.02	5.9073 150.045	5.9053 149.995
D-217-44			2.75 69.85	3.3482 85.04	3.3474 85.02	5.9073 150.045	5.9053 149.995
D-317		7.087 180	2.875 73.03	3.3482 85.04	3.3474 85.02	7.0886 180.050	7.0863 179.992

For sealed bearings, Outside diameter may be slightly oversize due to seal press fit.
Journal bearings and manufactured to the ABMA RBEC-1 tolerance class.

Metric dimensions for reference only.
Not all parts are available from stock. Please contact customer service for availability (800) 626-2120.
For more information on bearing capabilities outside of our standard offering, please contact Application Engineering (800) 626-2093.

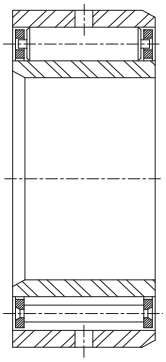

Assembly
D-XXX

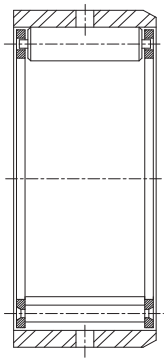

Outer Ring and Roller Assembly
B-XXX

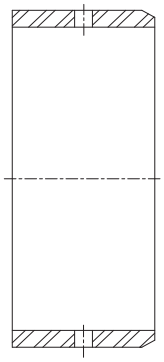

Outer Ring
B-XXX-70

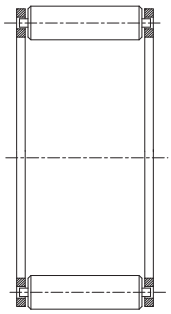

Roller Assembly
WS-XXX

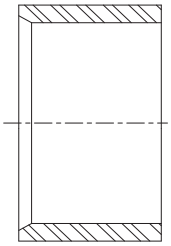

Inner Ring
E-XXX-60

Journals (continued)

D1	Rd	ri	ro	Hd Oil Hole Dia	Components Component Nomenclature			Assembly Basic Dynamic Rating	Assembly Basic Static Rating	Assembly weight
inch mm	inch mm	inch mm	inch mm	inch mm	Inner Ring	Outer Ring	Roller Assembly	lb/N	lb/N	lb kg
3.1250 79.38	0.5000 12.75	0.109 2.77	0.109 2.77	0.375 9.53	E-213-60	B-213-70	WS-213	20,800 92,800	46,000 204,600	4.7 2.1
3.1250 79.38	0.5000 12.75	0.109 2.77	0.109 2.77	0.375 9.53	E-213-33-60	B-213-33-70	WS-213-33	28,700 127,700	69,400 308,800	6.4 2.9
3.2500 82.55	0.8125 20.64	0.125 3.18	0.125 3.18	0.437 11.11	E-313-35-60	B-313-35-70	WS-313-35	40,800 181,800	82,000 365,000	9.9 4.5
3.2500 82.55	0.8125 20.64	0.125 3.18	0.125 3.18	0.468 11.89	E-313-60	B-313-70	WS-313	42,900 190,900	87,300 388,500	10.0 4.5
3.3120 84.12	0.5000 12.75	0.109 2.77	0.109 2.77	0.375 9.53	E-214-26-60	B-214-26-70	WS-214-26	25,800 115,100	62,000 275,700	5.3 2.4
3.3120 84.12	0.5000 12.75	0.109 2.77	0.109 2.77	0.375 9.53	E-214-38-60	B-214-38-70	WS-214-38	37,400 166,500	99,600 443,300	7.6 3.5
3.3120 84.12	0.5000 12.75	0.109 2.77	0.109 2.77	0.375 9.53	E-214-76-60	B-214-76-70	WS-214-38 (X2)	64,200 285,500	199,300 886,600	15.0 7.0
3.5000 88.90	0.5000 12.75	0.109 2.77	0.109 2.77	0.375 9.53	E-215-60	B-215-70	WS-215	25,700 114,500	62,400 277,700	5.6 2.5
3.5000 88.90	0.5000 12.75	0.109 2.77	0.109 2.77	0.375 9.53	E-215-28-60	B-215-28-70	WS-215-28	27,700 123,400	68,700 305,600	6.0 2.7
3.5000 88.90	0.5000 12.75	0.109 2.77	0.109 2.77	0.375 9.53	E-215-42-60	B-215-42-70	WS-215-42	40,800 181,800	113,000 502,700	9.1 4.0
3.5000 88.90	0.5000 12.75	0.109 2.77	0.109 2.77	0.375 9.53	E-215-84-60	B-215-84-70	WS-215-42 (X2)	84,700 376,900	288,600 1,283,800	18.0 8.2
3.7500 95.25	0.9375 23.81	0.156 3.96	0.125 3.18	0.437 11.11	E-315-39-60	B-315-39-70	WS-315-39	50,200 223,500	101,300 450,700	14.0 6.4
3.7500 95.25	0.5625 14.29	0.125 3.18	0.125 3.18	0.438 11.13	E-216-60	B-216-70	WS-216	31,600 140,700	76,800 341,900	7.0 3.2
3.7500 95.25	0.5625 14.29	0.125 3.18	0.125 3.18	0.438 11.13	E-216-29-60	B-216-29-70	WS-216-29	52,700 234,400	79,200 352,500	7.6 3.5
3.7500 95.25	0.5625 14.29	0.125 3.18	0.125 3.18	0.438 11.13	E-216-42-60	B-216-42-70	WS-216-42	46,600 207,200	126,400 562,300	10.0 5.0
3.7500 95.25	0.5625 14.29	0.125 3.18	0.125 3.18	0.438 11.13	E-216-84-60	B-216-84-70	WS-216-42 (X2)	79,900 355,400	252,800 1,124,600	20.0 9.0
4.000 101.6	1.0000 25.40	0.156 3.96	0.125 3.18	0.438 11.13	E-316-60	B-316-70	WS-316	57,930 257,600	118,600 527,800	17.0 7.7
4.0000 101.6	0.6250 15.88	0.125 3.18	0.125 3.18	0.438 11.13	E-217-60	B-217-70	WS-217	34,100 151,700	80,000 355,900	9.0 4.1
4.0000 101.6	0.6250 15.88	0.125 3.18	0.125 3.18	0.438 11.13	E-217-44-60	B-217-44-70	WS-217-44	47,400 211,100	122,300 544,200	13.0 5.9
4.2500 107.95	1.0000 25.40	0.156 3.96	0.156 3.96	0.562 14.27	E-314-60	B-317-70	WS-317	57,900 257,900	120,000 533,800	21.0 9.5

ROLLWAY® *Journal Bearings*

Basic Construction Type: Journal Roller Bearing

Rolling Elements: Trunion Style Cylindrical Rollers

Bearing Material: Bearing Grade Quality Steel

Retainer Type: Steel Cage With Flush Ground Ends

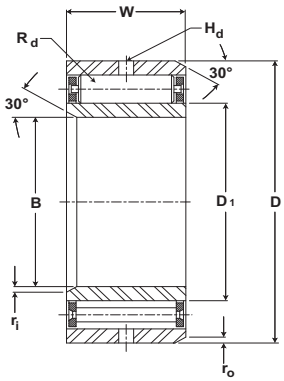

Journals (continued)

Complete Assembly Nomenclature	B	D	W	Recommended Shaft Diameter		Housing Bore Diameter	
	Bore Diameter	Outside Diameter	Width	Max	Min	Max	Min
	inch mm	inch mm	inch mm	inch mm	inch mm	inch mm	inch mm
D-218	3.5433 90	6.299 160	2.063 52.39	3.5450 90.04	3.5442 90.02	6.3011 160.048	6.299 159.995
D-218-45			2.8125 71.44	3.5450 90.04	3.5442 90.02	6.3011 160.048	6.299 159.995
D-219	3.7402 95	6.693 170	2.188 55.56	3.7420 95.05	3.7412 95.03	6.6948 170.048	6.6926 169.992
D-219-48			3.000 76.2	3.7420 95.05	3.7412 95.03	6.6948 170.048	6.6926 169.992
D-319		7.874 200	3.063 77.79	3.7420 95.05	3.7412 95.03	7.8762 200.055	7.8737 199.992
D-319-50			3.125 79.38	3.7420 95.05	3.7412 95.03	7.8762 200.055	7.8737 199.992
D-220-37	3.9370 100	7.087 180	2.313 58.74	3.9389 100.05	3.9380 100.03	7.0886 180.050	7.0863 179.992
D-220			2.375 60.33	3.9389 100.05	3.9380 100.03	7.0886 180.050	7.0863 179.992
D-220-52			3.25 82.55	3.9389 100.05	3.9380 100.03	7.0886 180.050	7.0863 179.992
D-220-104			6.5 165.10	3.9389 100.05	3.9380 100.03	7.0886 180.050	7.0863 179.992
D-320		8.465 215	3.25 82.55	3.9389 100.05	3.9380 100.03	8.4669 215.059	8.4643 214.993
D-222-41	4.3307 110	7.874 200	2.563 65.09	4.3328 110.05	4.3318 110.03	7.8762 200.055	7.8737 199.992
D-222			2.75 69.85	4.3328 110.05	4.3318 110.03	7.8762 200.055	7.8737 199.992
D-222-56			3.5 88.90	4.3328 110.05	4.3318 110.03	7.8762 200.055	7.8737 199.992
D-222-112			7 177.80	4.3328 110.05	4.3318 110.03	7.8762 200.055	7.8737 199.992
D-322		9.449 240	3.625 92.08	4.3328 110.05	4.3318 110.03	9.4512 240.060	9.4484 239.989
D-322-60			3.75 95.25	4.3328 110.05	4.3318 110.03	9.4512 240.060	9.4484 239.989
D-224-45	4.7244 120	8.465 215	2.813 71.44	4.7266 120.06	4.7256 120.03	8.4669 215.059	8.4643 214.993
D-224			3.00 76.2	4.7266 120.06	4.7256 120.03	8.4669 215.059	8.4643 214.993
D-224-62			3.875 98.425	4.7266 120.06	4.7256 120.03	8.4669 215.059	8.4643 214.993
D-324		10.236 260	4.125 104.78	4.7266 120.06	4.7256 120.03	10.2388 260.066	10.2358 259.989

For sealed bearings, Outside diameter may be slightly oversize due to seal press fit.
Journal bearings and manufactured to the ABMA RBEC-1 tolerance class.
Metric dimensions for reference only.
Not all parts are available from stock. Please contact customer service for availability (800) 626-2120.
For more information on bearing capabilities outside of our standard offering, please contact Application Engineering (800) 626-2093.

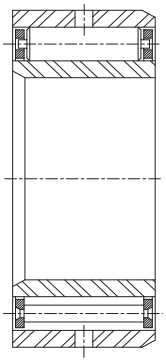

Assembly
D-XXX

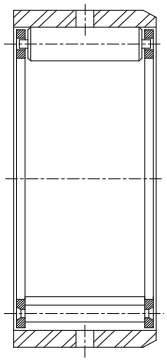

Outer Ring and Roller Assembly
B-XXX

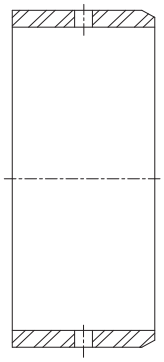

Outer Ring
B-XXX-70

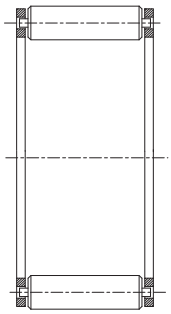

Roller Assembly
WS-XXX

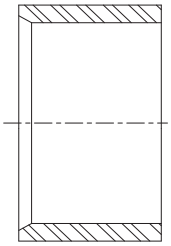

Inner Ring
E-XXX-60

Journals (continued)

D1	Rd	ri	ro	Hd Oil Hole Dia	Components Component Nomenclature			Assembly Basic Dynamic Rating	Assembly Basic Static Rating	Assembly weight
inch mm	inch mm	inch mm	inch mm	inch mm	Inner Ring	Outer Ring	Roller Assembly	lb/N	lb/N	lb kg
4.2480 107.90	0.6875 17.46	0.125 3.18	0.125 3.18	0.438 11.13	E-218-60	B-218-70	WS-218	37,900 168,500	87,600 389,700	11.0 5.0
4.2480 107.90	0.6875 17.46	0.125 3.18	0.125 3.18	0.438 11.13	E-218-45-60	B-218-45-70	WS-218-45	51,600 229,700	130,400 580,100	15.0 6.8
4.5000 114.30	0.7500 19.05	0.125 3.18	0.125 3.18	0.438 11.13	E-219-60	B-219-70	WS-219	46,500 206,900	109,700 488,300	15.0 6.8
4.5000 114.30	0.7500 19.05	0.125 3.18	0.125 3.18	0.438 11.13	E-219-48-60	B-219-48-70	WS-219-48	63,400 282,100	163,500 727,500	18.0 8.2
4.7500 120.65	1.1250 28.58	0.187 4.75	0.156 3.96	0.562 14.27	E-319-60	B-319-70	WS-319	66,000 293,800	135,500 602,900	28.0 12.7
4.7500 120.65	1.1250 28.58	0.187 4.75	0.156 3.96	0.562 14.27	E-319-50-60	B-319-50-70	WS-319-50	67,500 300,500	139,500 620,700	29.0 13.2
4.7500 120.65	0.7500 19.05	0.156 3.96	0.156 3.96	0.562 14.27	E-220-37-60	B-220-37-70	WS-220-37	49,000 218,000	118,000 529,100	16.0 7.3
4.7500 120.65	0.7500 19.05	0.156 3.96	0.156 3.96	0.562 14.27	E-220-60	B-220-70	WS-220	50,300 223,800	123,000 547,500	17.0 7.7
4.7500 120.65	0.7500 19.05	0.156 3.96	0.156 3.96	0.562 14.27	E-220-52-60	B-220-52-70	WS-220-52	68,000 302,700	181,300 806,800	23.0 10.5
4.7500 120.65	0.7500 19.05	0.156 3.96	0.156 3.96	0.562 14.27	E-220-104-60	B-220-104-70	WS-220-52 (X2)	116,600 519,000	362,700 1,613,700	45.0 20.5
5.0000 127.0	1.2500 31.75	0.187 4.75	0.187 4.75	0.562 14.27	E-320-60	B-320-70	WS-320	92,800 412,800	200,400 891,400	34.0 15.5
5.2500 133.35	0.8750 22.23	0.156 3.96	0.156 3.96	0.562 14.27	E-222-41-60	B-222-41-70	WS-222-41	59,800 266,300	142,800 635,500	22.0 10.0
5.2500 133.35	0.8750 22.23	0.156 3.96	0.156 3.96	0.562 14.27	E-222-60	B-222-70	WS-222	64,200 285,600	156,300 695,300	23.0 10.5
5.2500 133.35	0.8750 22.23	0.156 3.96	0.156 3.96	0.562 14.27	E-222-56-60	B-222-56-70	WS-222-56	80,900 359,900	210,500 936,300	30.0 13.6
5.2500 133.35	0.8750 22.23	0.156 3.96	0.156 3.96	0.562 14.27	E-222-112-60	B-222-112-70	WS-222-56 (X2)	138,700 617,100	421,000 1,872,700	59.0 26.8
5.5000 139.70	1.3750 34.93	0.219 5.56	0.219 5.56	0.562 14.27	E-322-60	B-322-70	WS-322	101,600 452,300	216,600 963,800	49.0 22.3
5.5000 139.70	1.3750 34.93	0.219 5.56	0.219 5.56	0.562 14.27	E-322-60-60	B-322-60-70	WS-322-60	105,000 467,400	226,020 1,005,300	51.0 23.2
5.6250 142.88	0.9375 23.81	0.156 3.96	0.187 4.75	0.562 14.27	E-224-45-60	B-224-45-70	WS-224-45	72,200 321,200	177,100 787,700	28.0 12.7
5.6250 142.88	0.9375 23.81	0.156 3.96	0.187 4.75	0.562 14.27	E-224-60	B-224-70	WS-224	76,700 341,400	191,500 852,200	29.0 13.2
5.6250 142.88	0.9375 23.81	0.156 3.96	0.187 4.75	0.562 14.27	E-224-62-60	B-224-62-70	WS-224-62	95,600 425,500	254,200 1,130,800	38.0 17.0
6.0620 153.97	1.3750 34.93	0.250 6.35	0.250 6.35	0.562 14.27	E-324-60	B-324-70	WS-324	123,400 549,000	283,600 1,261,700	67.0 30.0

ROLLWAY® *Journal Bearings*

Basic Construction Type: Journal Roller Bearing

Rolling Elements: Trunion Style Cylindrical Rollers

Bearing Material: Bearing Grade Quality Steel

Retainer Type: Steel Cage With Flush Ground Ends

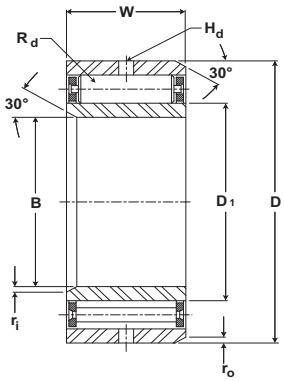

Journals (continued)

Complete Assembly Nomenclature	B	D	W	Recommended Shaft Diameter		Housing Bore Diameter	
	Bore Diameter	Outside Diameter	Width	Max	Min	Max	Min
	inch mm	inch mm	inch mm	inch mm	inch mm	inch mm	inch mm
D-226	5.1181 130	9.055 230	3.125 79.38	5.1204 130.06	5.1194 130.03	9.0574 230.058	9.0547 229.989
D-226-68			4.25 107.95	5.1204 130.06	5.1194 130.03	9.0574 230.058	9.0547 229.989
D-226-136			8.5 215.90	5.1204 130.06	5.1194 130.03	9.0574 230.058	9.0547 229.989
D-326		11.024 280	4.375 111.13	5.1204 130.06	5.1194 130.03	11.0263 280.068	11.0231 279.987
D-228	5.5118 140	9.843 250	3.25 82.55	5.5142 140.06	5.5131 140.03	9.845 250.063	9.8421 249.989
D-228-76			4.75 120.65	5.5142 140.06	5.5131 140.03	9.845 250.063	9.8421 249.989
D-228-152			9.5 241.3	5.5142 140.06	5.5131 140.03	9.845 250.063	9.8421 249.989
D-230	5.9055 150	10.63 270	3.5 88.90	5.9080 150.06	5.9069 150.04	10.6326 270.068	10.6295 269.989
D-230-76			4.75 120.65	5.9080 150.06	5.9069 150.04	10.6326 270.068	10.6295 269.989
D-232	6.2992 160	11.417 290	3.875 98.43	6.3019 160.07	6.3007 160.04	11.4201 290.071	11.4168 289.987
D-232-78			4.875 123.83	6.3019 160.07	6.3007 160.04	11.4201 290.071	11.4168 289.987
D-232-156			9.75 247.65	6.3019 160.07	6.3007 160.04	11.4201 290.071	11.4168 289.987
D-234-86	6.6929 170	12.205 310	5.375 136.53	6.6957 170.07	6.6944 170.04	12.2076 310.073	12.2042 309.987
D-234-172			10.75 273.05	6.6957 170.07	6.6944 170.04	12.2076 310.073	12.2042 309.987
D-236-94	7.0866 180	12.598 320	5.875 149.23	7.0895 180.07	7.0882 180.04	12.6013 320.073	12.5978 319.984
SD-240	7.8740 200	13.386 340	4.75 120.65	7.8770 200.08	7.8757 200.04	13.3888 340.076	13.3852 339.984
SD240-110			6.875 174.63	7.8770 200.08	7.8757 200.04	13.3888 340.076	13.3852 339.984
SD-244-110	8.6614 220	14.961 380	6.875 174.63	8.6644 220.08	8.6631 220.04	14.9637 380.078	14.9599 379.981

For sealed bearings, Outside diameter may be slightly oversize due to seal press fit.
Journal bearings and manufactured to the ABMA RBEC-1 tolerance class.

Metric dimensions for reference only.
Not all parts are available from stock. Please contact customer service for availability (800) 626-2120.
For more information on bearing capabilities outside of our standard offering, please contact Application Engineering (800) 626-2093.

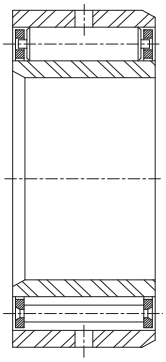

Assembly
D-XXX

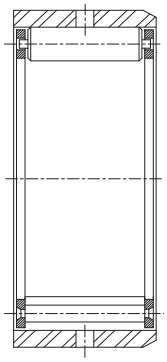

Outer Ring and Roller Assembly
B-XXX

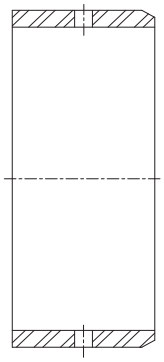

Outer Ring
B-XXX-70

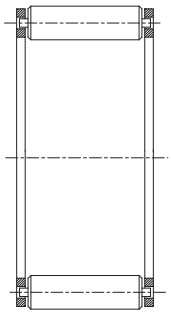

Roller Assembly
WS-XXX

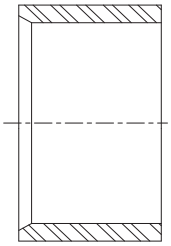

Inner Ring
E-XXX-60

Journals (continued)

D1	Rd	ri	ro	Hd Oil Hole Dia	Components Component Nomenclature			Assembly Basic Dynamic Rating	Assembly Basic Static Rating	Assembly weight
inch mm	inch mm	inch mm	inch mm	inch mm	Inner Ring	Outer Ring	Roller Assembly	lb/N	lb/N	lb kg
6.062 153.97	1.0000 25.40	0.156 3.96	0.187 4.75	0.562 14.27	E-226-60	B-226-70	WS-226	89,600 398,800	229,300 1,020,200	33.0 15.0
6.062 153.97	1.0000 25.40	0.156 3.96	0.187 4.75	0.562 14.27	E-226-68-60	B-226-68-70	WS-226-68	117,100 520,800	323,200 1,437,700	45.0 20.0
6.062 153.97	1.0000 25.40	0.156 3.96	0.187 4.75	0.562 14.27	E-226-136-60	B-226-136-70	WS-226-68 (X2)	200,700 893,000	646,400 2,875,500	90.0 41.0
6.5580 166.57	1.5000 38.10	0.250 6.35	0.250 6.35	0.562 14.27	E-326-60	B-326-70	WS-326	143,500 638,300	332,500 1,479,300	80.0 36.0
6.6250 168.28	1.0625 26.99	0.219 5.56	0.219 5.56	0.562 14.27	E-228-60	B-228-70	WS-228	99,000 440,500	256,400 1,140,600	43.0 20.0
6.6250 168.28	1.0625 26.99	0.219 5.56	0.219 5.56	0.562 14.27	E-228-76-60	B-228-76-70	WS-228-76	137,700 612,800	391,800 1,743,200	63.0 29.0
6.6250 168.28	1.0625 26.99	0.219 5.56	0.219 5.56	0.563 14.30	E-228-152-60	B-228-152-70	WS-228-76 (X2)	236,200 1,050,600	783,800 3,486,500	125.0 57.0
7.0620 179.37	1.1875 30.16	0.219 5.56	0.219 5.56	0.625 15.88	E-230-60	B-230-70	WS-230	128,500 571,700	341,200 1,517,700	52.0 24.0
7.0620 179.37	1.1875 30.16	0.219 5.56	0.250 6.35	0.625 15.88	E-230-76-60	B-230-76-70	WS-230-76	169,800 755,500	488,290 2,172,000	70.0 32.0
7.6250 193.68	1.2500 31.75	0.250 6.35	0.250 6.35	0.625 15.88	E-232-60	B-232-70	WS-232	149,000 662,900	407,000 1,810,700	67.0 30.0
7.6250 193.68	1.2500 31.75	0.250 6.35	0.250 6.35	0.625 15.88	E-232-78-60	B-323-78-70	WS-232-78	183,300 815,500	531,300 2,363,600	85.0 39.0
7.6250 193.68	1.2500 31.75	0.250 6.35	0.250 6.35	0.625 15.88	E-232-156-60	B-232-156-70	WS-232-78 (X2)	314,300 1,398,200	1,062,700 4,727,300	169.0 77.0
8.0620 204.77	1.3750 34.93	0.250 6.35	0.250 6.35	0.687 17.45	E-234-86-60	B-234-86-70	WS-234-86	185,900 827,300	513,800 2,285,600	108.0 49.0
8.0625 204.79	1.3750 34.93	0.250 6.35	0.250 6.35	0.688 17.48	E-234-172-60	B-234-172-70	WS-234-86 (X2)	318,900 1,418,800	1,027,100 4,569,000	217.0 99.0
8.4680 215.09	1.3750 34.93	0.250 6.35	0.250 6.35	0.687 17.45	E-236-94-60	B-236-94-70	WS-236-94	220,500 980,800	649,700 2,890,200	125.0 57.0
9.2500 234.95	1.3750 34.93	0.250 6.35	0.250 6.35	0.687 17.45	SE-240-60	SB-240-70	SWS-240	187,840 835,500	540,900 2,406,400	132.0 60.0
9.2500 234.95	1.3750 34.93	0.250 6.35	0.250 6.35	0.687 17.45	SE-240-110-60	SB-240-110-70	SWS-240-110	261,900 1,165,000	842,100 3,746,100	190.0 86.0
10.4370 265.10	1.3750 34.93	0.250 6.35	0.250 6.35	0.687 17.45	SE-244-110-60	SB-244-110-70	SWS-244-110	272,700 1,213,200	888,900 3,954,400	137.0 62.0

Load Ratings and Life

Life Calculations

The L10 (rating) life for any given application and bearing selection can be calculated in terms of millions of revolutions by using the bearing Basic Dynamic Rating and applied radial load (or, equivalent radial load in the case of radial bearing applications having combined radial and thrust loads). The L10 life for any given application can be calculated in terms of hours, using the bearing Basic Dynamic Rating, applied load (or equivalent radial load) and suitable speed factors, by the following equation:

$$L_{10} = \left(\frac{C}{P}\right) \times \frac{1{,}000{,}000}{60 \times n} = \left(\frac{C}{P}\right)^{10/3} \times \frac{16667}{n}$$

Where:

L_{10} = The # of hours that 90% of identical bearings under ideal conditions will operate at a specific speed and condition before fatigue is expected to occur.

C = Basic Dynamic Rating (lbs) 1,000,000 Revolutions

P = Constant Equivalent Radial Load (lbs)

n = Speed (RPM)

Additionally, the ABMA provides application factors for all types of bearings which need to be considered to determine an adjusted Rated Life (Lna). L10 life rating is based on laboratory conditions yet other factors are encountered in actual bearing application that will reduce bearing life. Lna life rating takes into account reliability factors, material type, and operating conditions.

$$L_{na} = a_1 \times a_2 \times a_3 \times L_{10}$$

Where:

L_{na} = Adjusted Rated Life.

a_1 = Reliability Factor. Adjustment factor applied where estimated fatigue life is based on reliability other than 90% (See Table No 1).

Table No. 1 Life Adjustment Factor for Reliability

Reliability %	L_{na}	a_1
90	L10	1
95	L5	0.62
96	L4	0.53
97	L3	0.44
98	L2	0.33
99	L1	0.21
50	L50	5

a_2 =Material Factor. Life adjustment for bearing race material. Regal Power Transmission Solutions bearing races are manufactured from bearing quality steel. Therefore the a_2 factor is 1.0.

a_3 = Life Adjustment Factor for Operating Conditions. This factor should take into account the adequacy of lubricant, presence of foreign matter, conditions causing changes in material properties, and unusual loading or mounting conditions. Assuming a properly selected and mounted bearing having adequate seals and lubricant operating below 250°F and tight fitted to the shaft, the a3 factor should be 1.0.

Load Ratings and Life Continued

Vibration and shock loading can act as an additional loading to the steady expected applied load. When shock or vibration is present, an a3 Life Adjustment Factor can be applied. Shock loading has many variables which often are not easily determined. Typically, it is best to rely on one's experience with the particular application. Consult Application Engineering for assistance with applications involving shock or vibration loading.

The a3 factor takes into account a wide range of application and mounting conditions as well as bearing features and design. Accurate determination of this factor is normally achieved through testing and in-field experience. Regal Power Transmission Solutions offers a wide range of options which can maximize bearing performance. Consult Application Engineering for more information.

Variable Load Formula

Root mean load (RML) is to be used when a number of varying loads are applied to a bearing for varying time limits. Maximum loading still must be considered for bearing size selection.

$$\text{RML}^* = \sqrt[10/3]{\frac{(L_1^{10/3}N_1)+(L_2^{10/3}N_2)+(L_3^{10/3}N_3)}{100}}$$

Where:

RML = Root Mean Load (lbs.)

L_1, L_2, etc. = Load in pounds

N_1, N_2, etc. = Percent of total time operated at loads L_1, L_2, etc.

* Apply RML to rating at mean speed to determine resultant life.

Mean Speed Formula

The following formula is to be used when operating speed varies over time.

$$\text{Mean Speed} = \frac{S_1N_1+S_2N_2+S_3N_3}{100}$$

S_1S_2, etc = Speeds in RPM

N_1N_2, etc = Percentage of total time operated at speeds S_1S_2, etc

Load Ratings and Life Continued

Bearing Life In Oscillating Applications

The equivalent rotative speed (ERS) is used in life calculations when the bearing does not make complete revolutions during operation. The ERS is then used as the bearing operating speed in the calculation of the L10 (Rating) Life. The formula is based on sufficient angular rotation to have roller paths overlap.

ERS = Equivalent Rotative Speed

N = Total number of degrees per minute through which the bearing will rotate.

$$ERS = \frac{N}{360}$$

In the above formula, allowance is made for the total number of stress applications on the weakest race per unit time, which, in turn, determines fatigue life and the speed factors. The theory behind fretting corrosion is best explained by the fact that the rolling elements in small angles of oscillation retrace a path over an unchanging area of the inner or outer races where the lubricant is prevented by inertia from flowing in behind the roller as the bearing oscillates in one direction. Upon reversal, this small area of rolling contact is traversed by the same roller in the dry state. The friction of the two unlubricated surfaces causes fretting corrosion and produces failures which are unpredictable from a normal life standpoint.

With a given bearing selected for an oscillating application, the best lubrication means is a light mineral oil under positive flow conditions. With a light oil, there is a tendency for all areas in the bearing load zone to be immersed in lubricant at all times. The full flow lubrication dictates that any oxidized material which may form is immediately carried away by the lubricant, and since these oxides are abrasive, further wear tends to be avoided. If grease lubrication must be used, it is best to consult with either the bearing manufacturer or the lubricant manufacturer to determine the best possible type of lubricant. Greases have been compounded to resist the detrimental effect of fretting corrosion for such applications.

Static Load Rating

The “static load rating” for rolling element bearings is that uniformly distributed static radial load acting on a non-rotating bearing, which produces a contact stress of 580,000 psi (roller bearings) or 607,000 psi (ball bearings) at the center of the most heavily loaded rolling element. At this stress level, plastic deformation begins to be significant. Experience has shown that the plastic deformation at this stress level can be tolerated in most bearing applications without impairment of subsequent bearing operation. In certain applications where subsequent rotation of the bearing is slow and where smoothness and friction requirements are not too exacting, a higher static load limit can be tolerated. Where extreme smoothness is required or friction requirements are critical, a lower static load limit may be necessary.

Minimum Bearing Load

Skidding, or sliding, of the rolling elements on the raceway instead of a true rolling motion can cause excessive wear. Applications with high speeds and light loading are particularly prone to skidding. As a general guideline, rolling element bearings should be radially loaded at least 2% of Basic Dynamic Rating. For applications where load is light relative to the bearings dynamic load rating, consult Application Engineering for assistance.

Load Ratings and Life Continued

Needle Roller Bearings Selection - New Applications:

Example #1:
To find theoretical L10 life of an MR 16 bearing operating at a speed of 500 RPM and under a load of 1000 lbs.

Basic Dynamic Rating of MR-16 = 8000 lbs. Use Formula:

$$L_{10} = \frac{16{,}666}{N}\left(\frac{BDR}{P}\right)^{10/3}$$

$$L_{10} = \frac{16{,}666}{500}\left(\frac{8000}{1000}\right)^{10/3}$$

L_{10} = 34,132 hours

Example #2:
Find the Basic Dynamic Rating required for a CAGEROL® bearing operating at 1000 RPM, with a load of 700 pounds. The required L10 life will be 20,000 hours. Use the Formula:

$BDR = .054 \times P \times (L_{10} \times N)^{.3}$

$BDR = .054 \times 700 \times (20{,}000 \times 1000)^{.3}$

$BDR = .054 \times 700 \times 155$

BDR = 5859 lbs.

Needle Engineering Section

Type of Load

The load ratings in this catalog are based on uniform and steady loading. When the loading is of a shock nature and/or vibration is present, or the loading is indeterminate, a bearing of greater rating must be selected. If such conditions exist, it is advisable to use the application Type of Load Factor as shown in the table below.

Type of Load Factors

The actual bearing load should be multiplied by the appropriate load factor and the resultant value used to calculate the bearing life or to determine the required basic dynamic rating (BDR).

Type of Load	Factor C
Uniform and Constant	1.0
Light Shock	1.5
Moderate Shock	2.0
Heavy Shock	3.0

Matched Bearings (MR, GR, RS, RD series only)

Where bearings are mounted so that the distance between them is less than the width of one bearing, it is recommended under heavy loading conditions to provide some degree of diametral matching in order to prevent unequal sharing of the applied load. Matching procedures have been developed to provide super precision matching of bearings. Bearings matched in this category are identified by "-DS" suffix for super precision.

A. O.D. and I.D., where applicable, of matched bearings same diameters within 30% of the respective O.D. or I.D. tolerance.

B. I.D. of rollers or diametral clearance, where applicable, of matched bearings same within 30% of the tolerance range.

C. Radial runout of matched bearings same within 20% of the tolerance range.

D. High point of radial runout marked on the face of each outer and inner ring.

E. Matched bearings to be packaged as a unit.

Matching Factor	Matching Suffix
1 .37	None
1 .65	“-DS”

Multiply Matching Factor by rating of single bearing to obtain resultant rating for pair of bearings.

Needle Engineering Section continued

Shaft Materials and Their Treatment

In order to obtain the performance built into needle and radial roller bearings when applied without inner races, it is important that the bearing user employ the best possible shaft material and heat treatment.

This is especially critical in cases of outer race rotation where the shaft becomes the weakest member of the bearing assembly.

Manufacturing simplicity as well as reduced operating clearances can be obtained by omission of inner races with their extra expense, as well as build-up of tolerances. This construction is employed frequently in the application of needle bearings and to a somewhat lesser degree in radial roller bearings.

With the conventional application using inner races, the selection of shaft material is principally a matter of manufacturing economy coupled with proper bending and tensile strength, and in most cases surface heat treatments of shafts are dispensed with. However, when the inner race is eliminated, the shaft then becomes an integral member of the bearing and the three following areas must be accurately and correctly covered for best bearing performance:

1. Shaft material selection.
2. Shaft heat treatment.
3. Shaft surface finish.

Under item 1, there are a number of satisfactory shaft materials which can be employed and they can be broken down into two groups as follows:

1. Thru-hardening or induction hardening material.
2. Case hardening material.

Where thru-hardening or induction hardening materials are employed, a sound material would be SAE 52100 steel, such as employed by the bearing manufacturers. This material may be induction zone hardened, or thru-hardened in accordance with the dictates of the application. However, as shaft material in the thru-hardened state, the high core hardness of the 52100 steel causes brittleness that may be objectionable.

Zone hardening or induction hardening that provides a tougher core is usually more satisfactory for shaft applications. Alternate materials, such as SAE 1050, SAE 1150 may be used, employing the induction or flame hardening process. While these steels will induction harden satisfactorily to give the proper hardness ranges, they will not offer the fatigue resistance of the higher alloy content steels.

Examples of higher alloy steels are SAE 4650, SAE 8650, etc. These materials do not require carburization for induction hardening. However, as mentioned above, the absence of excess carbides in the surface structure of the material after heat treatment reduces the fatigue life of the material correspondingly. Hardnesses in the range of 60 HRC should be maintained under all circumstances.

Needle Engineering Section continued

For case hardening, any number of materials can be employed, ranging from the plain carbon SAE 1010 to 1020 up through SAE 4615, 4620, 8615 and 8620. Shafts can be completely carburized and case hardened or zone hardened by masking or copper plating areas desired left in soft state. A minimum hardness of 58 HRC should be employed. For the best quality of heat treatment, it is imperative that the hardening temperature in both the induction and thru-hardening process be held to rather close limits, in order to avoid the formation of retained austenite. In water quenching of induction hardened steels, the cracking of shafts after treatment should be avoided by immediate tempering. Contact Application Engineering for assistance in determining minimum required case depths.

A practical maximum surface finish for shafts being used as inner races would be 12 micro inches RA. Rougher surface finishes can be employed; however, the user will run the risk of more erratic performance due to the wearing in of the shaft as well as a lesser control of dimensional accuracy of the mounted bearing. All bearings wear in to a certain extent and the amount of "wear-in" depends directly upon the surface finish of the mating parts. The rougher the surface the greater the "wear-in" and the greater range of resultant clearance which would ensue.

MR and GR Series Bearing Lubrication

Sealed MR and GR series bearings are factory filled with an NLGI 1 lithium soap thickened grease suitable for operating temperatures of -20°F to +250°F. Unsealed MR, GR, RS, RD and MI inner rings are coated with a corrosion preventive oil. Consult Application Engineering regarding grease compatibility issues.

MR and GR series bearings have a lubrication hole and annular groove centered on the outside diameter to allow relubrication of the bearing through the housing member. The MI inner ring has a lubrication hole and annular groove centered in the bore diameter to allow relubrication of the bearing through the shaft member.

When sealed MR and GR series bearings are to be relubricated, it is recommended that the RS, SRS or RSS seal arrangement is used. These arrangements locate a seal lip outward and allows excess and used grease to vent during relubrication.

Frequency of lubrication depends primarily upon the speed of rotation of the bearing, the type of lubrication employed and the amount of contamination present in the application. For continuously rotating applications, it is necessary to either provide continuous oil lubrication or else frequent grease lubrication, depending upon the severity of service. Automatic lubrication devices are ideal for intermittent lubrication, since accurate metering of grease and consistent relubrication is maintained through the use of these devices. Best determination of relubrication interval can be made by testing or experience in the application. Contact Application Engineering for assistance in determining relubrication interval.

Mounting Details - Heavy-Duty Needle Roller Bearings Series McGill MR, GR, MI, RS, RD, and Rollway Journal Bearings

Proper mounting of CAGEROL® and GUIDEROL® heavy-duty needle roller bearings generally require a press fit of the ring rotating relative to the radial load. A close to loose fit is used for the ring stationary relative to the radial load. Specific shaft and housing diameters are listed in the respective series dimension tables.

Needle Engineering Section continued

For Rollway Journal bearing applications, a rotating shaft is the predominant method of operation. Therefore, recommended shaft and housing tolerances are provided for applications with a rotating shaft only. For Journal applications which require a rotating housing, please consult Application Engineering for specific Journal bearing shaft and housing fits.

The following are some general guidelines and details to bear in mind when installing these bearing series:

1. **Inspect housing and shaft.**
   - Clean, remove burrs and shaft edges.
   - If any damage has occurred to the bearing seat in the housing or on the shaft, repair that damage to bring the seat surfaces back to its original condition.
2. **Determine which member, shaft or housing, has an interference fit with the bearing.**
   - In general, the ring rotating relative to the radial load has an interference fit.
   - Refer to dimension tables for specific shaft and housing diameters.
3. **Install the bearing onto the press-fitted member by applying force against the bearing ring that is press-fitted.**
   - For a press-fitted inner ring, apply the force required to assemble the bearing onto the shaft against the face of the bearing inner ring.
   - For a press-fitted outer ring, apply the force required to assemble the bearing into the housing against the face of the bearing outer ring.
   - Care should be exercised to assure that the bearing starts onto the press-fitted member as squarely as possible.
   - Use arbor press whenever possible.
   - Do not hammer on bearing ring face.
4. **Inner rings press-fitted on the shaft may be more easily installed onto the shaft by heating the ring and causing it to shrink-fit.**
   - Normally, heating the ring to 175°F to 212°F (70°C to 100°C) will be sufficient to allow the ring to slide over the interference fit shaft seat.
   - Heating the ring should be accomplished with an induction heater or in an oil bath. Never use a torch to heat a bearing for assembly purposes.
5. **When outer rings are to be press-fitted into a housing, it is desirable to heat the housing to allow it shrink-fit onto the outer ring outside diameter.**
   - Freezing the bearing to shrink it for easy assembly into a press-fitted housing is not recommended. Water condensation can form inside the bearing upon its return to room temperature, which can lead to corrosion. Exposure to extreme cold can also affect the metallurgical structure of the bearing.
6. **After mounting is complete, the assembly should be inspected to insure that it rotates freely, without unusual drag or noise.**

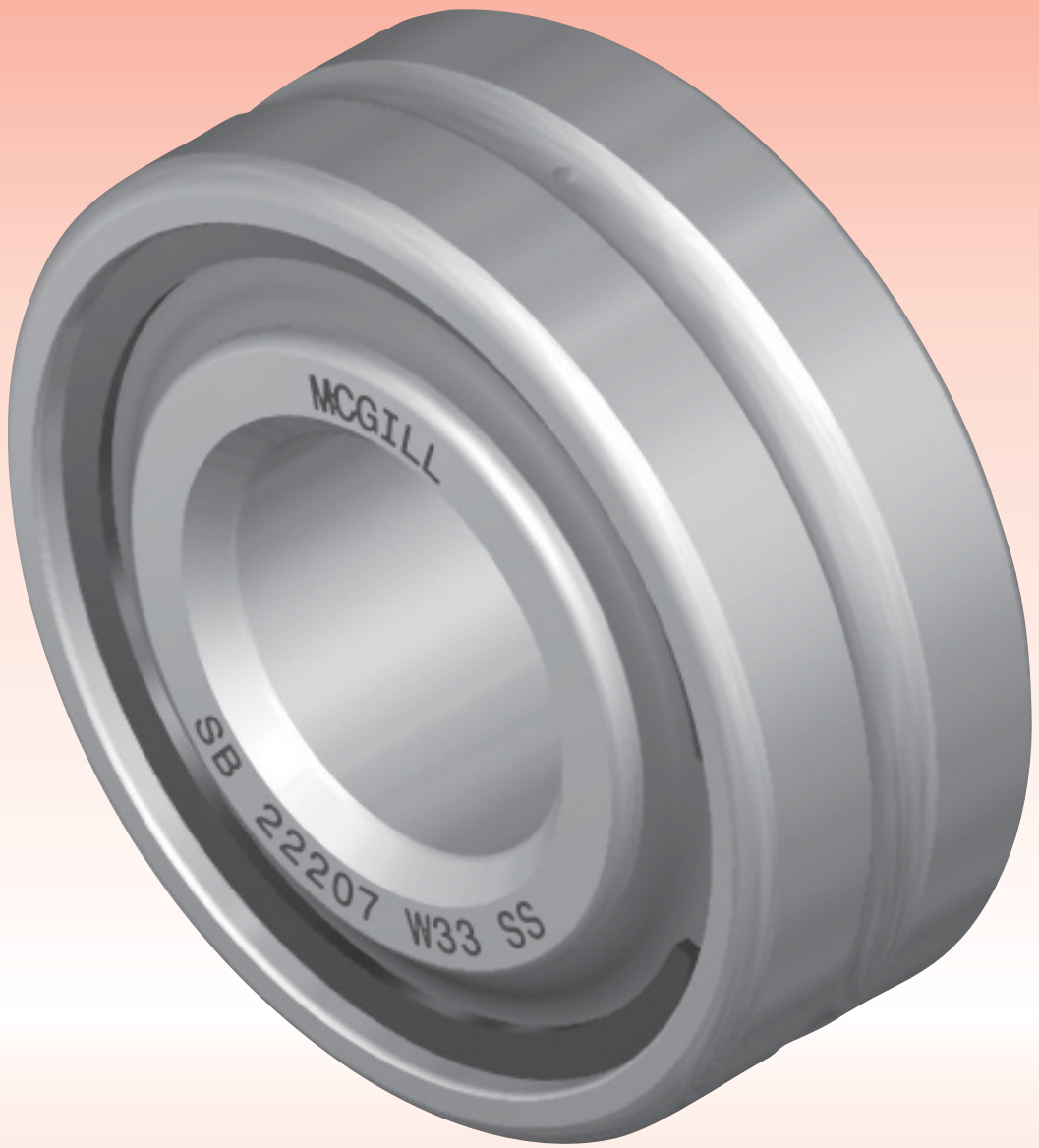
MCGILL
SB 22207 W33 SS

Spherical Roller

Unmounted bearing assembly consisting of through hardened inner and outer raceways with single spherical rolling elements separated by steel land riding retainer (cage) and available with several seal options. SPHERE-ROL® roller bearings provide an antifriction solution when supporting rotating shafts with combination radial and thrust loads.

Bearing Configurations

Sealed / unsealed, straight or tapered bore

Bore Diameter Size Range

20 mm to 150 mm (.5906” to 5.9055”)

Materials

Bearing Quality Steel

Spherical Roller Selection Guide

		Product Series	Material / Roller Complement	Size Range: Metric	Size Range: Inch Equiv
SHERE-ROL		22200 Series	Bearing Steel Spherical Roller	20 - 150	.7674 - 5.9055
		22300 Series	Bearing Steel Spherical Roller	40 - 100	1.5748 - 3.9370

*** For estimating purpose only, individually sizes may vary and are subject to change without notification**

Design Characteristics				Features								
Misalignment	Dynamic Load Rating	High Speed	Relative Base Cost *	Seals	Taper Bore	Oil Holes	High Temp. Seals	Expansion Type	DS Matching	Select OD W22	Standard Clearances C2 thru C4	Page No.
◒	●	◔	$$	O	O	S	O	O	O	O	O	D-11
◒	●	●	$$	O	O	S	O	O	O	O	O	D-15

Several sealing options available
Option for tapered shaft or adapter mounting
Standard "W33" feature includes annular groove and lubrication holes
For applications up to 450°F a high temp seal option is offered
For applications requiring compensation for linear thermal expansion
Recommended for load sharing when mounting bearing pairs
Reduced O.D. tolerance, for improved housing fit control
Depending on the application needs, clearance options are available to help control the internal diametrical clearance

O = Optional
S = Standard
○ = Not Recommended

◔ ◒ ◒ ◒ ●

Poor ⟷ Best

McGill SPHERE-ROL® Spherical Bearings

McGill SPHERE-ROL® Bearings feature an optimal diameter of single row spherical rollers separated by a land riding steel retainer within a dimensionally interchangeable (ABMA/ISO specification) envelope. In addition, SPHERE-ROL® bearings feature NYLAPLATE®, NYLAPLATE high temperature and LAMBDA® seal options and misalignment capabilities, further differentiating SPHERE-ROL® bearings from other types. The bearing design and use of tapered bore with adapter option provide diametrical clearance control and installation ease. Depending on your preference, these bearings are available in a wide variety of sizes, clearances and sealing options as illustrated on the pages to follow.

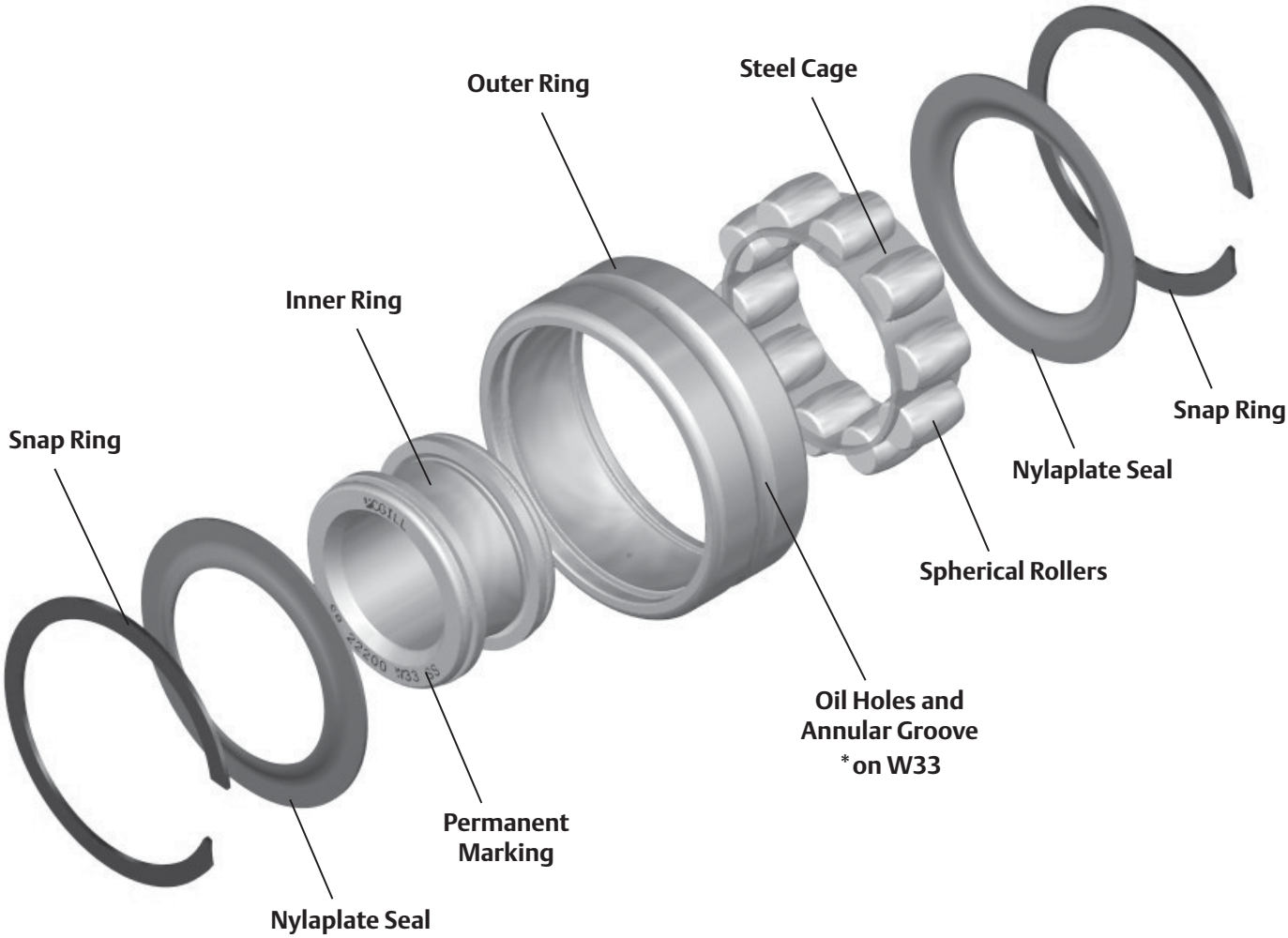

SPHERE-ROL® Nomenclature

Prefix
- SB - SPHERE-ROL Bearing

Series Identifier
- 22200
- 22300

Bore Size (In 5mm)

Optional Tapered Bore

Internal Clearances
- None - Standard
- C2 - Less Than Standard
- C3 - Greater Than Standard
- C4 - Greater Than C3

Optional Expansion Type

Lubrication Feature standard

Sealing Options (see below)

Optional Grease Suffix
- VA - High Temp. Grease
- # - Modification

SB - 22207K - C3E - W33 - SS - VA

Standard Bore
- S - Nylaplate Seal One Side
- SS - Nylaplate Seal Both Sides
- TS - High Temp. Seal One Side
- TSS - High Temp. Seal Both Sides
- YS - Lambda Seal One Side
- YSS - Lambda Seal Both Sides

Tapered Bore
- S - Nylaplate Seal On Small End
- SSL - Nylaplate Seal On Large End
- TS - High Temp. Seal On Small End
- TSL - High Temp. Seal On Large End
- YS - Lambda Seal On Small End
- YSL - Lambda Seal On Large End

Features and Benefits

Misalignment Capability

As a result of the design geometry, SPHERE-ROL® bearings offer up to ±3˚ misalignment in unsealed versions.

Annular Lubrication Groove and Holes

The groove provides a circumferential path to direct lubricant and to the two oil holes.

Spherical Roller

Precision spherical rollers provide high radial load capability, while providing the space necessary for seal options within a standard envelope dimension. The design of the roller provides a higher dynamic load rating and optimizes the number of maximum diameter rollers.

Inner Ring Raceway Flanges

Provide roller guidance and surface to support retainer. The raceway width, or distance between the two flanges, also helps define a designed endplay in the bearing. For applications requiring compensation for shaft growth due to linear thermal expansion, SPHERE-ROL bearings are available with increased internal endplay identified by the expansion type(E) option.

Steel Cage

The spacing provided by the heat treated steel cage contributes to the high speed capabilities and provides a lubricant reservoir within the bearing envelope.

Features and Benefits continued

Combination Load Capacity

The SPHERE-ROL® bearing design allows for high radial load capacity and the ability to accommodate a thrust load in combination with a radial load. Thrust load capability is proportional to the amount of radial load and pure thrust loads are not recommended. Typically a ratio less than .20 of axial to radial loads (Fa/Fr < .20) is appropriate for SPHERE-ROL bearings, equivalent load formulas specified in the Engineering Section of this catalog.

Factory Grease Fill

The sealed SPHERE-ROL bearings are factory lubricated with a medium temperature (-30° to 250°F, -34° to 121° C) Polyurea E.P. grease. Unsealed bearings packaged with light oil film as a rust preventative. Contact Application Engineering when application conditions require special lubricants.

Options

"S or SS" Nylaplate Seal

Combination labyrinth and contact seal is capable of 300° F maximum temperature. Bearing misalignment should not to exceed ±2˚ in operation for best seal performance. When ordering seals for tapered bore (-K option) bearing, indication of which side to be sealed must be provided. The "L" in the option suffix defines a seal installed on larger bore diameter side of the taper, no indication will default to seal installed on small bore side.

"TS or TSS" Nylaplate High Temperature Seal

Combination labyrinth and contact seal for operating temperatures up to 450°F. Bearing misalignment should not to exceed ±2˚ in operation for best seal performance. Bearings with this seal option will include a high temperature grease fill designated by the VA grease suffix in the part number When ordering seals for tapered bore (-K option) bearing, indication of which side to be sealed must be provided. The "L" in the option suffix defines a seal installed on larger bore diameter side of the taper, no indication will default to seal installed on small bore side.

Options continued

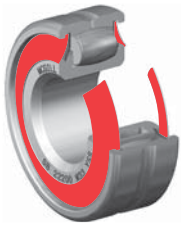

"YS or YSS" Lambda Seal

Utilizes a Nylaplate seal with an added contact seal for greater lip wiping seal function. Bearing misalignment should not exceed ±1/2˚ in operation for beast seal performance and maximum ±1˚. When ordering seals for tapered bore (-K option) bearing, indication of which side to be sealed must be provided. The "L" in the option suffix defines a seal installed on larger bore diameter side of the taper, no indication will default to seal installed on small bore side.

"E"Expansion –Type E

A special version of the SPHERE-ROL bearing can be provided to accommodate expansion (float) internally to the bearing. The bearing design allows the SPHERE-ROL bearing to be the only spherical roller to have this ability, but does have a 10% reduction in BDR. Typically, application requiring tolerance for linear shaft expansion will have an expansion (Float) and non-expansion (fixed) position as mounted on a common shaft. The expansion-type SPHERE-ROL® bearing will not operate satisfactorily if subjected to thrust loading. Therefore, the expansion-type SPHERE-ROL® bearing must not be used in "fixed" ("held") positions—it is for use only in "expansion" ("float") positions. It is recommended that the end-wise restraint of both race rings of the expansion-type bearing be provided, so that the expansion allowance intended to be available is not lost by error in installation

"K" Tapered bore bearing

SPHERE-ROL® bearings are available with tapered bore feature for applications utilizing tapered adapter sleeve mounting arrangements or tapered shaft seats. This feature facilitates the mounting of SPHERE-ROL® bearings and can be used to prevent the necessity for heating of bearings or to eliminate the need for complicated press fitting practices. Standard tapered adapter sleeves, as well as associated lock nuts and lock washers, are tabulated within the engineering section and are identifiable with the appropriate bearing by the suffix number. The separate items may be called out individually by their part number or the complete tapered bore bearing and associated hardware may be identified by the suffix letter "A" following the bearing number. The standard bore taper of these bearings is 1" in 12", on the diameter, and tapered bore bearings are themselves identified by the suffix letter "K" following the basic bearing number.

Options continued

Diametral Clearance

SPHERE-ROL® bearings are available in internal diametral clearance ranges identified as C2, Standard, C3 and C4. The internal diametral clearances are progressively less than the Standard, while C3 and C4 are progressively looser than Standard. Similarly, four internal clearance ranges are available for tapered bore SPHERE-ROL® bearings. Each of these ranges is somewhat looser than the corresponding cylindrical bore bearing internal diametral clearance range, because of the need to accommodate a somewhat tighter fit with the tapered bore mounting arrangement. The following two charts give the internal diametral clearance ranges normally available with SPHERE-ROL® bearings from McGill. Stock bearings having standard diametral clearance will not be identified by special marking; however, the C2, C3 and C4 clearances will be identified on the bearing inner ring face, following the basic bearing number.

"DS" Matched Bearings

When two SPHERE-ROL bearings are installed with the distance between both bearing less than the width of one bearing, it is recommended the bearings be diametrically matched to prevent unequal load sharing. The option, matches OD and ID tolerances, and Diametral Clearance with high point of runout indicated on the bearing faces. For more information and matching factors please review the engineering section for matched bearings.

Grease Options

When requested, standard bearings can be factory filled with customer specified lubricant or industry equivalent.

McGILL® SPHERE-ROL® Spherical Bearings

Basic Construction Type: 22200 Series Spherical Bearing With Non-Separable Inner Ring

Rolling Elements: Separated Spherical Rolling Elements

Bearing Material: Bearing Quality Steel

Seal Type: NYLAPLATE or LAMBDA

Lubrication: Sealed Bearings: Polyurea thickened NLGI 2 EP Grease.
Unsealed Bearings: Corrosion Preventive Oil

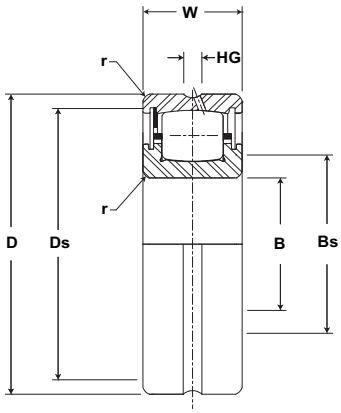

SB 22200

Part No.	B		D		W		Bs	Ds	HG	J	r	Limiting Speed (In Oil)	BDR	Bearing Weight
Base Bearing	Bore Diameter		Outside Diameter		Width		Min Shoulder Diameter Inner	Min Shoulder Diameter Outer	Annular Lub Groove	Lambda Seal Minimum Clearance	Maximum radius or fillet to clear		Basic Dynamic Rating	
	mm inch		mm inch		mm inch		mm inch		mm inch		mm inch	RPM*	N/lb	kg lb
	Nom.	Tol.	Nom.	Tol.	Nom.	Tol.	Ref	Ref	W33	Ref	Ref			
SB-22204	20.000	+0/-.010	47.000	+0/-.013	18.00	+0/-.13	25	41	3	3	1.0	11000	31,140	.15
	0.7874	+0/-.0004	1.8504	+0/-.0005	.709	+0/-.005	1.0	1.6	.1	.1	.04		7,000	.32
SB-22205	25.000	+0/-.010	52.000	+0/-.013	18.00	+0/-.13	30	46	5	3	1.0	9000	36,030	.18
	0.9843	+0/-.0004	2.0472	+0/-.0005	.709	+0/-.005	1.2	1.8	.2	.1	.04		8,100	.40
SB-22206	30.000	+0/-.010	62.000	+0/-.013	20.00	+0/-.13	36	56	5	3	1.0	8100	51,150	.29
	1.1811	+0/-.0004	2.4409	+0/-.0005	.787	+0/-.005	1.4	2.2	.2	.1	.04		11,500	.64
SB-22207	35.000	+0/-.013	72.000	+0/-.013	23.00	+0/-.13	41	61	5	3	1.0	6800	67,160	.43
	1.378	+0/-.0005	2.8346	+0/-.0005	.906	+0/-.005	1.6	2.4	.2	.1	.04		15,100	.95
SB-22208	40.000	+0/-.013	80.000	+0/-.013	23.00	+0/-.13	48	71	5	3	1.0	6000	74,730	.54
	1.5748	+0/-.0005	3.1496	+0/-.0005	.906	+0/-.005	1.9	2.8	.2	.1	.04		16,800	1.20
SB-22209	45.000	+0/-.013	85.000	+0/-.015	23.00	+0/-.13	53	74	5	3	1.0	5600	79,170	.59
	1.7717	+0/-.0005	3.3465	+0/-.0006	.906	+0/-.005	2.1	2.9	.2	.1	.04		17,800	1.30
SB-22210	50.000	+0/-.013	90.000	+0/-.015	23.00	+0/-.13	58	79	5	3	1.0	5250	83,180	.64
	1.9685	+0/-.0005	3.5433	+0/-.0006	.906	+0/-.005	2.3	3.1	.2	.1	.04		18,700	1.40
SB-22211	55.000	+0/-.015	100.000	+0/-.015	25.00	+0/-.15	64	89	5	3	1.5	4650	102,300	.86
	2.1654	+0/-.0006	3.937	+0/-.0006	.984	+0/-.006	2.5	3.5	.2	.1	.06		23,000	1.90
SB-22212	60.000	+0/-.015	110.000	+0/-.015	28.00	+0/-.15	71	99	5	3	1.5	4200	129,880	1.18
	2.3622	+0/-.0006	4.3307	+0/-.0006	1.102	+0/-.006	2.8	3.9	.2	.1	.06		29,200	2.60
SB-22213	65.000	+0/-.015	120.000	+0/-.015	31.00	+0/-.15	74	107	5	3	1.5	3800	157,900	1.54
	2.5591	+0/-.0006	4.7244	+0/-.0006	1.221	+0/-.006	2.9	4.2	.2	.1	.06		35,500	3.40
SB-22214	70.000	+0/-.015	125.000	+0/-.020	31.00	+0/-.15	79	112	5	3	1.5	3650	159,680	1.63
	2.7559	+0/-.0006	4.9213	+0/-.0008	1.221	+0/-.006	3.1	4.4	.2	.1	.06		35,900	3.60
SB-22215	75.000	+0/-.015	130.000	+0/-.020	31.00	+0/-.15	84	117	5	3	1.5	3500	167,240	1.77
	2.9528	+0/-0006	5.1181	+0/-0008	1.221	+0/-060	3.3	4.6	.2	.1	.06		37,600	3.90

Add K to base number indicate K bore option
Add W22 for select OD
All bearings are supplied with W33 option unless otherwise specified
*Refers to oil lubrication and moderate load, use 50% of value for grease lubrication.
Complete adapter number indicated adapter sleeve, locknut, and washer, for components refer to S=sleeve, N= lock Nut, W= lock washer
For Expansion type bearing add E suffix immediately after diametrical clearance specification per nomenclature diagram.
For Sealing options see page D-8
Outside diameter may be oversized, due to internal retaining ring

Metric dimensions for reference only.
Not all parts are available from stock. Please contact customer service for availability (800) 626-2120.
For more information on bearing capabilities outside of our standard offering, please contact Application Engineering (800) 626-2093.

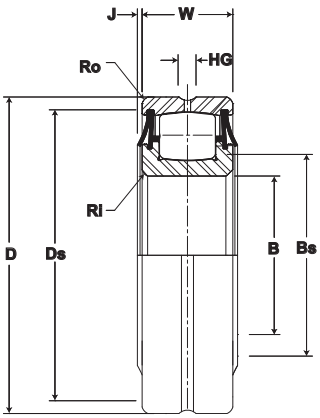

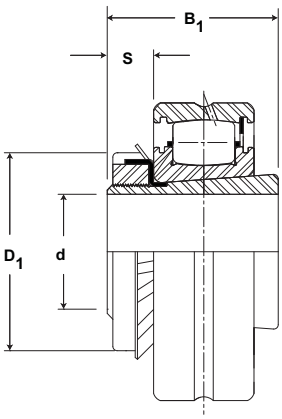

SB 22200

Part No.	Straight Bore Internal Radial Clearance								Taper (K) Bore Internal Radial Clearance (1" in 12" on Diameter)								Optional Adapter Dimensions				
Base Bearing	C2		Standard		C3		C4		C2		Standard		C3		C4		Adapter No.	Adapter Shaft Dimension	B1	S	D1
	mm inch		mm inch		mm inch		mm inch		mm inch		mm inch		mm inch		mm inch			mm inch		mm inch	
	Min	Max	Min	Max	Min	Max	Min	Max	Min	Max	Min	Max	Min	Max	Min	Max		(Ref)	(Ref)	(Ref)	(Ref)
SB-22204	.0102	.2032	.0356		.0457		.0610		.0152	.0254	.0356		.0457		.0610		-	-	-	-	-
	.0004	.0008	.0014		.0018		.0024		.0006	.0010	.0014		.0018		.0024						
SB-22205	.0152	.0254	.0406		.0559		.0711		.0203	.0305	.0432		.0559		.0762		SNW 05*	3.3	5.6	2.0	6.9
	.0006	.0010	.0016		.0022		.0028		.0008	.0012	.0017		.0022		.0030			.75	1.27	.45	1.56
SB-22206	.0152	.0305	.0457		.0610		.0813		.0203	.0356	.0508		.0660		.0864		SNW 06*	4.2	6.0	2.0	7.8
	.0006	.0012	.0018		.0024		.0032		.0008	.0014	.0020		.0026		.0034			.94	1.36	.45	1.75
SB-22207	.0152	.0305	.0457		.0610		.0813		.0203	.0356	.0508		.0660		.0864		SNW 07*	5.3	6.4	2.1	9.2
	.0006	.0012	.0018		.0024		.0032		.0008	.0014	.0020		.0026		.0034			1.19	1.45	.48	2.06
SB-22208	.0203	.0356	.0559		.0762		.0813		.0305	.0457	.0610		.0813		.1041		SNW 08*	5.8	6.7	2.2	10.0
	.0008	.0014	.0022		.0030		.0032		.0012	.0018	.0024		.0032		.0041			1.31	1.50	.50	2.25
SB-22209	.0203	.0356	.0559		.0762		.0813		.0305	.0457	.0610		.0813		.1041		SNW 09*	6.4	7.0	2.2	11.3
	.0008	.0014	.0022		.0030		.0032		.0012	.0018	.0024		.0032		.0041			1.44	1.58	.50	2.53
SB-22210	.0254	.0432	.0660		.0914		.1194		.0356	.0559	.0762		.0991		.1245		SNW 10*	7.5	7.9	2.5	12.0
	.0010	.0017	.0026		.0036		.0047		.0014	.0022	.0030		.0039		.0049			1.69	1.77	.56	2.69
SB-22211	.0254	.0432	.0660		.0914		.1194		.0356	.0559	.0762		.0991		.1245		SNW 11*	8.6	8.2	2.5	13.2
	.0010	.0017	.0026		.0036		.0047		.0014	.0022	.0030		.0039		.0049			1.94	1.84	.56	2.97
SB-22212	.0254	.0432	.0660		.0914		.1194		.0356	.0559	.0762		.0991		.1245		-	-	-	-	-
	.0010	.0017	.0026		.0036		.0047		.0014	.0022	.0030		.0039		.0049						
SB-22213	.0305	.0508	.0813		.1118		.1448		.0457	.0711	.0940		.1245		.1549		SNW 13	9.7	9.4	2.8	15.0
	.0012	.0020	.0032		.0044		.0057		.0018	.0028	.0037		.0049		.0061			2.19	2.11	.63	3.38
SB-22214	.0305	.0508	.0813		.1118		.1448		.0457	.0711	.0940		.1245		.1549		-	-	-	-	-
	.0012	.0020	.0032		.0044		.0057		.0018	.0028	.0037		.0049		.0061						
SB-22215	.0305	.0508	.0813		.1118		.1448		.0457	.0711	.0940		.1245		.1549		SNW 15*	10.9	10.2	3.0	17.3
	.0012	.0020	.0032		.0044		.0057		.0018	.0028	.0037		.0049		.0061			2.44	2.30	.67	3.88

* For sizes marked, standard ABMA locknuts and lock washers will not clear the LAMBDA seal unless 1/16" thick spacer is used between the face of bearing and washer (or locknut).

Basic Construction Type: 22200 Series Spherical Bearing With Non-Separable Inner Ring

Rolling Elements: Separated Spherical Rolling Elements

Bearing Material: Bearing Quality Steel

Seal Type: NYLAPLATE or LAMBDA

Lubrication: Sealed Bearings: Polyurea thickened NLGI 2 EP Grease. Unsealed Bearings: Corrosion Preventive Oil

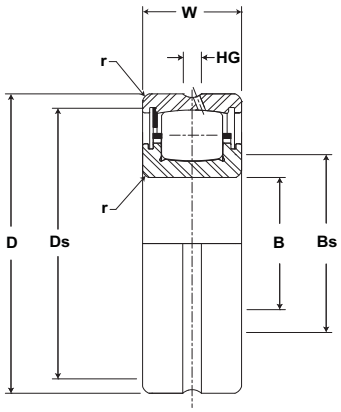

SB 22200 (continued)

Part No.	B		D		W		Bs	Ds	HG	J	r	Limiting Speed (In Oil)	BDR	Bearing Weight
Base Bearing	Bore Diameter		Outside Diameter		Width		Min Shoulder Diameter Inner	Min Shoulder Diameter Outer	Annular Lub Groove	Lambda Seal Minimum Clearance	Maximum radius or fillet to clear		Basic Dynamic Rating	
	mm inch		mm inch		mm inch		mm inch		mm inch		mm inch	RPM*	N/lb	kg lb
	Nom.	Tol.	Nom.	Tol.	Nom.	Tol.	Ref	Ref	W33	Ref	Ref			
SB-22216	80.000	+0/-.015	140.000	+0/-.020	33.00	+0/-.15	91	124	5	3	2.0	3250	188,600	2.09
	3.1496	+0/-.0006	5.5118	+0/-.0008	1.299	+0/-.006	3.6	4.9	.2	.1	.08		42,400	4.60
SB-22217	85.000	+0/-.020	150.000	+0/-.020	36.00	+0/-.20	97	135	5	3	2.0	3000	226,400	2.68
	3.3465	+0/-.0008	5.9055	+0/-.0008	1.417	+0/-.008	3.8	5.3	.2	.1	.08		50,900	5.90
SB-22218	90.000	+0/-.020	160.000	+0/-.025	40.00	+0/-.20	99	145	5	3	2.0	2800	263,320	3.40
	3.5433	+0/-.0008	6.2992	+0/-.0010	1.575	+0/-.008	3.9	5.7	.2	.1	.08		59,200	7.50
SB-22219	95.000	+0/-.020	170.000	+0/-.025	43.00	+0/-.20	107	155	8	3	2.0	2650	315,360	4.17
	3.7402	+0/-.0008	6.6929	+0/-.0010	1.693	+0/-.008	4.2	6.1	.3	.1	.08		70,900	9.20
SB-22220	100.000	+0/-.020	180.000	+0/-.025	46.00	+0/-.20	112	163	8	3	2.0	2500	345,610	5.03
	3.937	+0/-.0008	7.0866	+0/-.0010	1.811	+0/-.008	4.4	6.4	.3	.1	.08		77,700	11.10
SB-22222	110.000	+0/-.020	200.000	+0/-.030	53.00	+0/-.20	124	180	8	3	2.0	2200	444,800	7.21
	4.3307	+0/-.0008	7.874	+0/-.0012	2.087	+0/-.008	4.9	7.1	.3	.1	.08		100,000	15.90
SB-22224	120.000	+0/-.020	215.000	+0/-.030	58.00	+0/-.20	135	196	10	5	2.0	2050	533,760	8.98
	4.7244	+0/-.0008	8.4646	+0/-.0012	2.284	+0/-.008	5.3	7.7	.4	.2	.08		120,000	19.80
SB-22226	130.000	+0/-.025	230.000	+0/-.030	64.00	+0/-.25	150	211	10	5	2.5	1900	589,360	11.29
	5.1181	+0/-.0010	9.0551	+0/-.0012	2.520	+0/-.010	5.9	8.3	.4	.2	.10		132,500	24.80
SB-22228	140.000	+0/-.025	250.000	+0/-.030	68.00	+0/-.25	160	231	10	5	2.5	1750	707,680	14.19
	5.5118	+0/-.0010	9.8425	+0/-.0012	2.677	+0/-.010	6.3	9.1	.4	.2	.10		159,100	31.30
SB-22230	150.000	+0/-.025	270.000	+0/-.036	73.00	+0/-.25	170	246	13	5	2.5	1600	753,050	17.92
	5.9055	+0/-.0010	10.6299	+0/-.0014	2.874	+0/-.010	6.7	9.7	.5	.2	.10		169,300	39.50
SB-22236	180.000	+0/-.025	320.000	+0/-.041	86.00	+0/-.25	213	290	18	5	3.0	1350	1,024,820	21.92
	7.0866	+0/-.0010	12.5984	+0/-.0016	3.386	+0/-.010	8.4	11.4	.7	.2	.12		230,400	48.34

Add K to base number to indicate K bore option
Add W22 for select OD
All bearings are supplied with W33 option unless otherwise specified
*Refers to oil lubrication and moderate load, use 50% of value for grease lubrication.
Complete adapter number indicated adapter sleeve, locknut, and washer, for components refer to S=sleeve, N= lock Nut, W= lock washer
For Expansion type bearing add E suffix immediately after diametrical clearance specification per nomenclature diagram.
For Sealing options see page D-8
Outside diameter may be oversized, due to internal retaining ring

Metric dimensions for reference only.
Not all parts are available from stock. Please contact customer service for availability (800) 626-2120.
For more information on bearing capabilities outside of our standard offering, please contact Application Engineering (800) 626-2093.

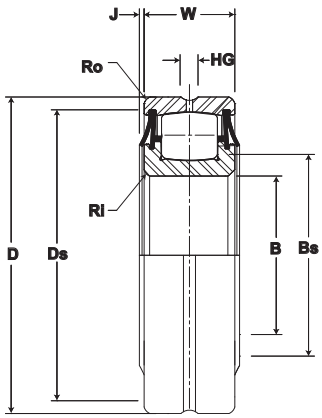

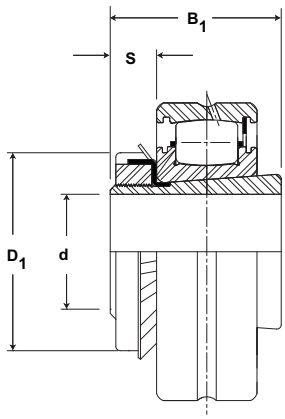

SB 22200 (continued)

Part No.	Straight Bore Internal Radial Clearance								Taper (K) Bore Internal Radial Clearance (1" in 12" on Diameter)								Optional Adapter Dimensions				
Base Bearing	C2		Standard		C3		C4		C2		Standard		C3		C4		Adapter No.	Adapter Shaft Dimension	B1	S	D1
	mm inch		mm inch		mm inch		mm inch		mm inch		mm inch		mm inch		mm inch			mm inch		mm inch	
	Min	Max	Min	Max	Min	Max	Min	Max	Min	Max	Min	Max	Min	Max	Min	Max		(Ref)	(Ref)	(Ref)	(Ref)
SB-22216	.0356 .0014	.0635 .0025	.0991 .0039	.1346 .0053	.1803 .0071	.0508 .0020	.0813 .0032	.1118 .0044	.1448 .0057	.1905 .0075	SNW 16	12.0 2.69	10.6 2.38	3.0 .67	18.5 4.16
SB-22217	.0356 .0014	.0635 .0025	.0991 .0039	.1346 .0053	.1803 .0071	.0508 .0020	.0813 .0032	.1118 .0044	.1448 .0057	.1905 .0075	SNW 17	13.1 2.94	11.0 2.48	3.1 .70	19.6 4.41
SB-22218	.0356 .0014	.0635 .0025	.0991 .0039	.1346 .0053	.1803 .0071	.0508 .0020	.0813 .0032	.1118 .0044	.1448 .0057	.1905 .0075	SNW 18	14.2 3.19	11.7 2.64	3.5 .78	20.7 4.66
SB-22219	.0356 .0014	.0635 .0025	.0991 .0039	.1346 .0053	.1803 .0071	.0508 .0020	.0813 .0032	.1118 .0044	.1448 .0057	.1905 .0075	-	-	-	-	-
SB-22220	.0432 .0017	.0787 .0031	.1219 .0048	.1626 .0064	.2108 .0083	.0635 .0025	.0991 .0039	.1346 .0053	.1753 .0069	.2261 .0089	SNW 20	15.3 3.44	12.8 2.88	3.7 .84	23.1 5.19
SB-22222	.0432 .0017	.0787 .0031	.1219 .0048	.1626 .0064	.2108 .0083	.0635 .0025	.0991 .0039	.1346 .0053	.1753 .0069	.2261 .0089	SNW 22	17.5 3.94	14.2 3.20	4.0 .91	25.4 5.72
SB-22224	.0508 .0020	.0965 .0038	.1448 .0057	.1905 .0075	.2413 .0095	.0762 .0030	.1194 .0047	.1600 .0063	.2057 .0081	.2591 .0102	SNW 24	18.6 4.19	15.4 3.47	4.2 .94	27.3 6.13
SB-22226	.0508 .0020	.0965 .0038	.1448 .0057	.1905 .0075	.2413 .0095	.0762 .0030	.1194 .0047	.1600 .0063	.2057 .0081	.2591 .0102	SNW 26	19.7 4.44	16.8 3.77	4.4 1.00	30.0 6.75
SB-22228	.0610 .0024	.1092 .0043	.1651 .0065	.2210 .0087	.2794 .0110	.0864 .0034	.1346 .0053	.1803 .0071	.2311 .0091	.2997 .0118	SNW 28	22.0 4.94	17.7 3.98	4.7 1.06	31.5 7.09
SB-22230	.0610 .0024	.1092 .0043	.1651 .0065	.2210 .0087	.2794 .0110	.0864 .0034	.1346 .0053	.1803 .0071	.2311 .0091	.2997 .0118	SNW 30	23.1 5.19	18.8 4.23	5.0 1.13	34.2 7.69
SB-22236	.0610 .0024	.1092 .0043	.1651 .0065	.2210 .0087	.2794 .0110	.0864 .0034	.1346 .0053	.1803 .0071	.2311 .0091	.2997 .0118	SNW 36	28.6 6.44	22.5 5.05	5.6 1.25	40.3 9.06

McGILL® SPHERE-ROL® Spherical Bearings

Basic Construction Type: 22300 Series Spherical Bearing With Non-Separable Inner Ring

Rolling Elements: Separated Spherical Rolling Elements

Bearing Material: Bearing Quality Steel

Seal Type: NYLAPLATE or LAMBDA

Lubrication: Sealed Bearings: Polyurea thickened NLGI 2 EP Grease.
Unsealed Bearings: Corrosion Preventive Oil

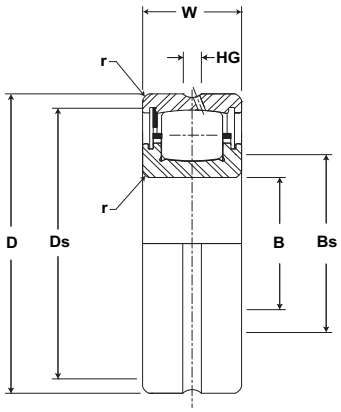

SB 22300

Part No.	B		D		W		Bs	Ds	HG	J	r	Limiting Speed (In Oil)	BDR	Bearing Weight
Base Bearing	Bore Diameter		Outside Diameter		Width		Min Shoulder Diameter Inner	Min Shoulder Diameter Outer	Annular Lub Groove	Lambda Seal Minimum Clearance	Maximum radius or fillet to clear		Basic Dynamic Rating	
	mm inch		mm inch		mm inch		mm inch		mm inch			RPM*	N/lb	kg lb
	Nom.	Tol.	Nom.	Tol.	Nom.	Tol.	Ref	Ref	W33	Ref	Ref			
SB-22308	40.000	+0/-.013	90.000	+0/-.015	33.00	+0/-.13	48	79	5	2.3	1.5	5250	113,870	1.04
	1.5748	+0/-.0005	3.5433	+0/-.0006	1.299	+0/-.005	1.9	3.1	.2	.09	.06		25,600	2.30
SB-22309	45.000	+0/-.013	110.000	+0/-.015	36.00	+0/-.13	53	89	8	2.3	1.5	4650	133,880	1.41
	1.7717	+0/-.0005	3.937	+0/-.0006	1.417	+0/-.005	2.1	3.5	.3	.09	.06		30,100	3.10
SB-22310	50.000	+0/-.013	110.000	+0/-.015	40.00	+0/-.13	61	99	8	2.3	2.0	4200	166,360	1.86
	1.9685	+0/-.0005	4.3307	+0/-.0006	1.575	+0/-.005	2.4	3.9	.3	.09	.08		37,400	4.10
SB-22311	55.000	+0/-.013	120.000	+0/-.015	43.00	+0/-.15	66	109	8	3.3	2.0	3800	183,700	2.40
	2.1654	+0/-.0005	4.7244	+0/-.0006	1.693	+0/-.006	2.6	4.3	.3	.13	.08		41,300	5.30
SB-22312	60.000	+0/-.013	130.000	+0/-.020	46.00	+0/-.15	71	117	8	3.3	2.0	3500	243,310	2.99
	2.3622	+0/-.0005	5.1181	+0/-.0008	1.811	+0/-.006	2.8	4.6	.3	.13	.08		54,700	6.60
SB-22313	65.000	+0/-.013	140.000	+0/-.020	48.00	+0/-.15	76	124	8	3.3	2.0	3250	265,550	3.54
	2.5591	+0/-.0005	5.5118	+0/-.0008	1.890	+0/-.006	3.0	4.9	.3	.13	.08		59,700	7.80
SB-22314	70.000	+0/-.013	150.000	+0/-.020	51.00	+0/-.15	84	137	8	3.3	2.0	3000	304,240	4.31
	2.7559	+0/-.0005	5.9055	+0/-.0008	2.008	+0/-.006	3.3	5.4	.3	.13	.08		68,400	9.50
SB-22315	75.000	+0/-.013	160.000	+0/-.025	55.00	+0/-.15	86	137	8	3.3	2.0	2800	332,710	5.39
	2.9528	+0/-.0005	6.2992	+0/-.0010	2.165	+0/-.006	3.4	5.4	0.3	.13	.08		74,800	11.90
SB-22316	80.000	+0/-.013	170.000	+0/-.025	58.00	+0/-.15	91	155	8	3.3	2.0	2650	344,720	6.30
	3.1496	+0/-.0005	6.6929	+0/-.0010	2.284	+0/-.006	3.6	6.1	.3	.13	.08		77,500	13.90

Add K to base number indicate K bore option
Add W22 for select OD
All bearings are supplied with W33 option unless otherwise specified
*Refers to oil lubrication and moderate load, use 50% of value for grease lubrication.
Complete adapter number indicated adapter sleeve, locknut, and washer, for components refer to S=sleeve, N= lock Nut, W= lock washer
For Expansion type bearing add E suffix immediately after diametrical clearance specification per nomenclature diagram.
For Sealing options see page D-8
Outside diameter may be oversized, due to internal retaining ring

Metric dimensions for reference only.
Not all parts are available from stock. Please contact customer service for availability (800) 626-2120.
For more information on bearing capabilities outside of our standard offering, please contact Application Engineering (800) 626-2093.

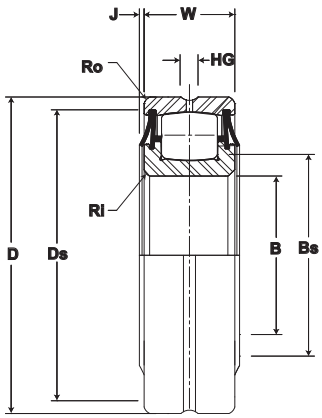

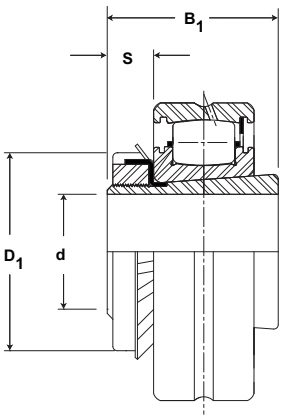

SB 22300

Part No.	Straight Bore Internal Radial Clearance								Taper (K) Bore Internal Radial Clearance (1" in 12" on Diameter)								Optional Adapter Dimensions				
Base Bearing	C2		Standard		C3		C4		C2		Standard		C3		C4		Adapter No.	Adapter Shaft Dimension	B1	S	D1
	mm inch		mm inch		mm inch		mm inch		mm inch		mm inch		mm inch		mm inch			mm inch		mm inch	
	Min	Max	Min	Max	Min	Max	Min	Max	Min	Max	Min	Max	Min	Max	Min	Max		(Ref)	(Ref)	(Ref)	(Ref)
SB-22308	.0203 .0008	.0356 .0014	.0559 .0022	.0762 .0030	.0813 .0032	.0305 .0012	.0457 .0018	.0610 .0024	.0813 .0032	.1041 .0041	-	-	-	-	-
SB-22309	.0203 .0008	.0356 .0014	.0559 .0022	.0762 .0030	.0813 .0032	.0305 .0012	.0457 .0018	.0610 .0024	.0813 .0032	.1041 .0041	SNW 109	6.4 1.44	9.5 2.14	2.2 .50	11.3 2.53
SB-22310	.0254 .0010	.0432 .0017	.0660 .0026	.0914 .0036	.1194 .0047	.0356 .0014	.0559 .0022	.0762 .0030	.0991 .0039	.1245 .0049	-	-	-	-	-
SB-22311	.0254 .0010	.0432 .0017	.0660 .0026	.0914 .0036	.1194 .0047	.0356 .0014	.0559 .0022	.0762 .0030	.0991 .0039	.1245 .0049	SNW 111	8.6 1.94	11.2 2.52	2.5 .56	13.2 2.97
SB-22312	.0254 .0010	.0432 .0017	.0660 .0026	.0914 .0036	.1194 .0047	.0356 .0014	.0559 .0022	.0762 .0030	.0991 .0039	.1245 .0049	-	-	-	-	-
SB-22313	.0305 .0012	.0508 .0020	.0813 .0032	.1118 .0044	.1448 .0057	.0457 .0018	.0711 .0028	.0940 .0037	.1245 .0049	.1549 .0061	SNW 113	9.7 2.19	12.3 2.77	2.8 .63	15.0 3.38
SB-22314	.0305 .0012	.0508 .0020	.0813 .0032	.1118 .0044	.1448 .0057	.0457 .0018	.0711 .0028	.0940 .0037	.1245 .0049	.1549 .0061	-	-	-	-	-
SB-22315	.0305 .0012	.0508 .0020	.0813 .0032	.1118 .0044	.1448 .0057	.0457 .0018	.0711 .0028	.0940 .0037	.1245 .0049	.1549 .0061	SNW 115	10.9 2.44	13.7 3.08	3.0 .67	17.3 3.88
SB-22316	.0356 .0014	.0635 .0025	.0991 .0039	.1346 .0053	.1803 .0071	.0508 .0020	.0813 .0032	.1118 .0044	.1448 .0057	.1905 .0075	SNW 116	12.0 2.69	14.2 3.20	3.0 .67	18.5 4.16

Basic Construction Type: 22300 Series Spherical Bearing With Non-Separable Inner Ring

Rolling Elements: Separated Spherical Rolling Elements

Bearing Material: Bearing Quality Steel

Seal Type: NYLAPLATE or LAMBDA

Lubrication: Sealed Bearings: Polyurea thickened NLGI 2 EP Grease.
Unsealed Bearings: Corrosion Preventive Oil

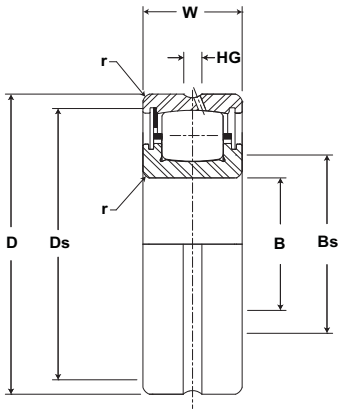

SB 22300 (continued)

Part No.	B		D		W		Bs	Ds	HG	J	r	Limiting Speed (In Oil)	BDR	Bearing Weight
Base Bearing	Bore Diameter		Outside Diameter		Width		Min Shoulder Diameter Inner	Min Shoulder Diameter Outer	Annular Lub Groove	Lambda Seal Minimum Clearance	Maximum radius or fillet to clear		Basic Dynamic Rating	
	mm inch		mm inch		mm inch		mm inch		mm inch			RPM*	N/lb	kg lb
	Nom.	Tol.	Nom.	Tol.	Nom.	Tol.	Ref	Ref	W33	Ref	Ref			
SB-22317	85.000	+0/-.020	180.000	+0/-.025	60.00	+0/-.20	99	163	8	3.3	2.5	2500	423,000	7.35
	3.3465	+0/-.0008	7.0866	+0/-.0010	2.362	+0/-.008	3.9	6.4	.3	.13	.10		95,100	16.20
SB-22318	90.000	+0/-.020	190.000	+0/-.030	64.00	+0/-.20	104	173	10	3.3	2.5	2350	437,680	8.71
	3.5433	+0/-.0008	7.4803	+0/-.0012	2.520	+0/-.008	4.1	6.8	.4	.13	.10		98,400	19.20
SB-22319	95.000	+0/-.020	200.000	+0/-.030	67.00	+0/-.20	112	180	10	4.1	2.5	2200	486,610	10.29
	3.7402	+0/-.0008	7.874	+0/-.0012	2.638	+0/-.008	4.4	7.1	.4	.16	.10		109,400	22.70
SB-22320	100.000	+0/-.020	215.000	+0/-.030	73.00	+0/-.20	117	196	10	4.8	2.5	2050	572,900	12.88
	3.937	+0/-.0008	8.4646	+0/-.0012	2.874	+0/-.008	4.6	7.7	.4	.19	.10		128,800	28.40
SB-22322	110.000	+0/-.203	240.000	+0/-.030	80.00	+0/-.03	130	218	13	4.8	2.5	1800	805,980	19.37
	4.3307	+0/-0080	9.4488	+0/-0012	3.150	+0/-800	5.1	8.6	.5	.19	.10		181,200	42.71

Add K to base number indicate K bore option
Add W22 for select OD
All bearings are supplied with W33 option unless otherwise specified
Refers to oil lubrication and moderate load, use 50% of value for grease lubrication.
Complete adapter number indicated adapter sleeve, locknut, and washer, for components refer to S=sleeve, N= lock Nut, W= lock washer
For Expansion type bearing add E suffix immediately after diametrical clearance specification per nomenclature diagram.
For Sealing options see page D-8
Outside diameter may be oversized, due to internal retaining ring

Metric dimensions for reference only.
Not all parts are available from stock. Please contact customer service for availability (800) 626-2120.
For more information on bearing capabilities outside of our standard offering, please contact Application Engineering (800) 626-2093.

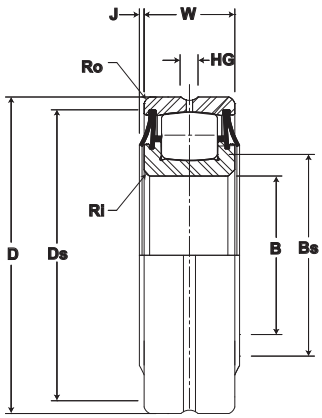

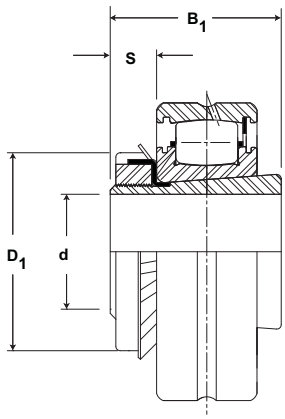

SB 22300 (continued)

Part No.	Straight Bore Internal Radial Clearance								Taper (K) Bore Internal Radial Clearance (1" in 12" on Diameter)								Optional Adapter Dimensions				
Base Bearing	C2		Standard		C3		C4		C2		Standard		C3		C4		Adapter No.	Adapter Shaft Dimension	B1	S	D1
	mm inch		mm inch		mm inch		mm inch		mm inch		mm inch		mm inch		mm inch			mm inch		mm inch	
	Min	Max	Min	Max	Min	Max	Min	Max	Min	Max	Min	Max	Min	Max	Min	Max		(Ref)	(Ref)	(Ref)	(Ref)
SB-22317	.0356	.0635	.0991	.1346	.1803				.0508	.0813	.1118	.1448	.1905				SNW 117	13.1	14.7	3.1	19.6
	.0014	.0025	.0039	.0053	.0071				.0020	.0032	.0044	.0057	.0075					2.94	3.31	.70	4.41
SB-22318	.0356	.0635	.0991	.1346	.1803				.0508	.0813	.1118	.1448	.1905				SNW 118	14.2	15.8	3.5	20.7
	.0014	.0025	.0039	.0053	.0071				.0020	.0032	.0044	.0057	.0075					3.19	3.55	.78	4.66
SB-22319	.0356	.0635	.0991	.1346	.1803				.0508	.0813	.1118	.1448	.1905				-	-	-	-	-
	.0014	.0025	.0039	.0053	.0071				.0020	.0032	.0044	.0057	.0075								
SB-22320	.0432	.0787	.1219	.1626	.2108				.0635	.0991	.1346	.1753	.2261				SNW 120	15.3	17.7	3.7	23.1
	.0017	.0031	.0048	.0064	.0083				.0025	.0039	.0053	.0069	.0089					3.44	3.97	.84	5.19
SB-22322	.0432	.0787	.1219	.1626	.2108				.0635	.0991	.1346	.1753	.2261				SNW 122	17.5	20.9	4.0	25.4
	.0017	.0031	.0048	.0064	.0083				.0025	.0039	.0053	.0069	.0089					3.94	4.69	.91	5.72

Load Ratings and Life

Life Calculations

The L10 (rating) life for any given application and bearing selection can be calculated in terms of millions of revolutions by using the bearing Basic Dynamic Rating and applied radial load (or, equivalent radial load in the case of radial bearing applications having combined radial and thrust loads). The L10 life for any given application can be calculated in terms of hours, using the bearing Basic Dynamic Rating, applied load (or equivalent radial load) and suitable speed factors, by the following equation:

$$L_{10} = \left(\frac{C}{P}\right) \times \frac{1{,}000{,}000}{60 \times n} = \left(\frac{C}{P}\right)^{10/3} \times \frac{16667}{n}$$

Where:

L_{10} = The # of hours that 90% of identical bearings under ideal conditions will operate at a specific speed and condition before fatigue is expected to occur.

C = Basic Dynamic Rating (lbs) 1,000,000 Revolutions

P = Constant Equivalent Radial Load (lbs)

n = Speed (RPM)

Additionally, the ABMA provides application factors for all types of bearings which need to be considered to determine an adjusted Rated Life (Lna). L10 life rating is based on laboratory conditions yet other factors are encountered in actual bearing application that will reduce bearing life. Lna life rating takes into account reliability factors, material type, and operating conditions.

$$L_{na} = a_1 \times a_2 \times a_3 \times L_{10}$$

Where:

L_{na} = Adjusted Rated Life.

a_1 = Reliability Factor. Adjustment factor applied where estimated fatigue life is based on reliability other than 90% (See Table No 1).

Table No. 1 Life Adjustment Factor for Reliability

Reliability %	L_{na}	a_1
90	L10	1
95	L5	0.62
96	L4	0.53
97	L3	0.44
98	L2	0.33
99	L1	0.21
50	L50	5

a_2 =Material Factor. Life adjustment for bearing race material. Regal Power Transmission Solutions bearing races are manufactured from bearing quality steel. Therefore the a_2 factor is 1.0.

a_3 = Life Adjustment Factor for Operating Conditions. This factor should take into account the adequacy of lubricant, presence of foreign matter, conditions causing changes in material properties, and unusual loading or mounting conditions. Assuming a properly selected and mounted bearing having adequate seals and lubricant operating below 250°F and tight fitted to the shaft, the a3 factor should be 1.0.

Load Ratings and Life Continued

Vibration and shock loading can act as an additional loading to the steady expected applied load. When shock or vibration is present, an a3 Life Adjustment Factor can be applied. Shock loading has many variables which often are not easily determined.Typically, it is best to rely on one's experience with the particular application. Consult Application Engineering for assistance with applications involving shock or vibration loading.

The a3 factor takes into account a wide range of application and mounting conditions as well as bearing features and design. Accurate determination of this factor is normally achieved through testing and in-field experience. Regal Power Transmission Solutions offers a wide range of options which can maximize bearing performance. Consult
Application Engineering for more information.

Combined Load – Single Row Spherical Roller Bearings

1. Calculate Fa/Fr.

When Fa/Fr O 0.12 ; P = VFr
When Fa/Fr > 0.12 ; P = 0.4VFr + 5.0Fa

P = Equivalent radial load, lbs.
Fr = Applied radial load, lbs.
Fa = Applied thrust load, lbs.
V = Rotation factor
= 1.0 for most applications
= 1.2 for vibratory applications

For applications involving combination loads in which Fa/Fr > 0.20, consult Application Engineering.

2. Calculate the L10 life using the life equation on page D-19.

Load Ratings and Life Continued

Variable Load Formula

Root mean load (RML) is to be used when a number of varying loads are applied to a bearing for varying time limits. Maximum loading still must be considered for bearing size selection.

$$\text{RML}^{*} = \sqrt[10/3]{\frac{(L_1^{10/3} N_1) + (L_2^{10/3} N_2) + (L_3^{10/3} N_3)}{100}}$$

Where:

RML = Root Mean Load (lbs.)

L_1, L_2, etc. = Load in pounds

N_1, N_2, etc. = Percent of total time operated at loads L_1, L_2, etc.

* Apply RML to rating at mean speed to determine resultant life.

Mean Speed Formula

The following formula is to be used when operating speed varies over time.

$$\text{Mean Speed} = \frac{S_1N_1 + S_2N_2 + S_3N_3}{100}$$

S_1S_2, etc = Speeds in RPM

N_1N_2, etc = Percentage of total time operated at speeds S_1S_2, etc

Bearing Life In Oscillating Applications

The equivalent rotative speed (ERS) is used in life calculations when the bearing does not make complete revolutions during operation. The ERS is then used as the bearing operating speed in the calculation of the L10 (Rating) Life. The formula is based on sufficient angular rotation to have roller paths overlap.

ERS = Equivalent Rotative Speed

N = Total number of degrees per minute through which the bearing will rotate.

$$\text{ERS} = \frac{N}{360}$$

In the above formula, allowance is made for the total number of stress applications on the weakest race per unit time, which, in turn, determines fatigue life and the speed factors. The theory behind fretting corrosion is best explained by the fact that the rolling elements in small angles of oscillation retrace a path over an unchanging area of the inner or outer races where the lubricant is prevented by inertia from flowing in behind the roller as the bearing oscillates in one direction. Upon reversal, this small area of rolling contact is traversed by the same roller in the dry state. The friction of the two unlubricated surfaces causes fretting corrosion and produces failures which are unpredictable from a normal life standpoint.

Load Ratings and Life Continued

With a given bearing selected for an oscillating application, the best lubrication means is a light mineral oil under positive flow conditions. With a light oil, there is a tendency for all areas in the bearing load zone to be immersed in lubricant at all times. The full flow lubrication dictates that any oxidized material which may form is immediately carried away by the lubricant, and since these oxides are abrasive, further wear tends to be avoided. If grease lubrication must be used, it is best to consult with either the bearing manufacturer or the lubricant manufacturer to determine the best possible type of lubricant. Greases have been compounded to resist the detrimental effect of fretting corrosion for such applications.

Minimum Bearing Load

Skidding, or sliding, of the rolling elements on the raceway instead of a true rolling motion can cause excessive wear. Applications with high speeds and light loading are particularly prone to skidding. As a general guideline, rolling element bearings should be radially loaded at least 2% of Basic Dynamic Rating. For applications where load is light relative to the bearings dynamic load rating, consult Application Engineering for assistance.

Spherical Engineering Section

Equivalent Loads

When SPHERE-ROL® bearings operate under conditions of combined radial and thrust loads, an equivalent radial load must be calculated to determine resultant bearing life. SPHERE-ROL® bearings are not recommended for applications involving pure thrust loads; however, combination loads may be carried in accordance with the following equivalent radial load formulae:

$$\text{When } \frac{F_a}{F_r} \leq 0.12;\ P = VF_r$$

$$\text{When } \frac{F_a}{F_r} < 0.12;\ P = .4VF_r + 5.0\,F_a$$

P = Equiv. radial load, lbs.
Fr = Applied radial load, lbs.
Fa = Applied thrust load, lbs.
V = Rotation factor
= 1.0 for most applications
= 1.2 for vibratory applications
For applications involving combination loads in which Fa/Fr > .20, consult Application Engineering.

Static Load Rating

The "static load rating" is that uniformly distributed static radial bearing load which produces a maximum contact stress of 580,000 PSI, acting at the center of contact of the most heavily loaded rolling element. At this stress level, plastic deformation begins (or begins to be significant). Experience has shown that the plastic deformation at this stress level can be tolerated in most bearing applications without impairment of subsequent bearing operation. In certain applications where subsequent rotation of the bearing is slow and where smoothness and friction requirements are not too exacting, a higher static load limit can be tolerated. Where extreme smoothness is required or friction requirements are critical, a lower static load limit may be necessary.

When static bearings are subjected to both radial and thrust loads, the equivalent static radial load is defined as:

PO = 0.5 Fr + 4.0 Fa or
PO = Fr whichever is greater.

Contact Application Engineering for specific static load ratings, and applications involving pure static thrust loads.

Spherical Engineering Section continued

Matched Bearings

Where bearings are mounted so that the distance between them is less than the width of one bearing, it is recommended under heavy loading conditions to provide some degree of diametral matching in order to prevent unequal sharing of the applied load.

Matching procedures have been developed to provide super precision matching of bearings.

Bearings matched in this category are identified by "-DS" suffix for super precision.

A. O.D. and I.D., where applicable, of matched bearings same diameters within 30% of the respective O.D. or I.D. tolerance.
B. Diametral clearance, where applicable, of matched bearings same within 30% of the tolerance range.
C. Radial runout of matched bearings same within 20% of the tolerance range.
D. High point of radial runout marked on the face of each outer and inner ring.
E. Matched bearings are packaged as a unit.

Matching Factor	Matching Suffix
1.55	None
1.71	“-DS”

Multiply Matching Factor by rating of single bearing to obtain resultant rating for pair of bearings.

Diametral Clearance

SPHERE-ROL® bearings are available in four internal diametral clearance ranges identified as C2, Standard, C3 and C4. The C2 internal diametral clearance is less than the Standard, while C3 and C4 are progressively looser than Standard.

Similarly, four internal clearance ranges are available for tapered bore SPHERE-ROL® bearings. Each of these ranges is somewhat looser than the corresponding cylindrical bore bearing internal diametral clearance range, because of the need to accommodate a somewhat tighter fit with the tapered bore mounting arrangement.

The two charts below give the internal diametral clearance ranges normally available with SPHERE-ROL® bearings

Bearings having standard diametral clearance will not be identified by special marking; however, the C2, C3 and C4 clearances will be identified on the bearing inner ring face, following the basic bearing number. Consult Customer Service for availability on non-standard diametral clearances.

Spherical Engineering Section continued

Radial Clearance (inches) for "SB" Bearings with a Straight Bore

Basic Bore Diameter MM		Radial Clearance in Inches							
		C2		Standard		C3		C4	
Over	Incl.	Min.	Max.	Min.	Max.	Min.	Max.	Min.	Max.
14	24	. 0004	. 0008	. 0008	. 0014	. 0014	. 0018	. 0018	0.002
24	30	. 0006	. 0010	. 0010	. 0016	. 0016	. 0022	. 0022	0.003
30	40	. 0006	. 0012	. 0012	. 0018	. 0018	. 0024	. 0024	0.003
40	50	. 0008	. 0014	. 0014	. 0022	. 0022	. 0030	. 0030	0.004
50	65	. 0010	. 0017	. 0017	. 0026	. 0026	. 0036	. 0036	0.005
65	80	. 0012	. 0020	. 0020	. 0032	. 0032	. 0044	. 0044	0.006
80	100	. 0014	. 0025	. 0025	. 0039	. 0039	. 0053	. 0053	0.007
100	120	. 0017	. 0031	. 0031	. 0048	. 0048	. 0064	. 0064	0.008
120	140	. 0020	. 0038	. 0038	. 0057	. 0057	. 0075	. 0075	0.010
140	160	. 0024	. 0043	. 0043	. 0065	. 0065	. 0087	. 0087	0.011
1600	180	. 0026	. 0047	. 0047	. 0071	. 0071	. 0095	. 0095	0.012

Radial Clearance (inches) for "SB" Bearings with a Tapered ("K" Type) Bore

Basic Bore Diameter MM		Radial Clearance in Inches							
		C2		Standard		C3		C4	
Over	Incl.	Min.	Max.	Min.	Max.	Min.	Max.	Min.	Max.
14	24	. 0006	. 0010	. 0010	. 0014	. 0014	. 0018	. 0018	0.002
24	30	. 0008	. 0012	. 0012	. 0017	. 0017	. 0022	. 0022	0.003
30	40	. 0008	. 0014	. 0014	. 0020	. 0020	. 0026	. 0026	0.003
40	50	. 0012	. 0018	. 0018	. 0024	. 0024	. 0032	. 0032	0.004
50	65	. 0014	. 0022	. 0022	. 0030	. 0030	. 0039	. 0039	0.005
65	80	. 0018	. 0028	. 0028	. 0037	. 0037	. 0049	. 0049	0.006
80	100	. 0020	. 0032	. 0032	. 0044	. 0044	. 0057	. 0057	0.008
100	120	. 0025	. 0039	. 0039	. 0053	. 0053	. 0069	. 0069	0.009
120	140	. 0030	. 0047	. 0047	. 0063	. 0063	. 0081	. 0081	0.010
140	160	. 0034	. 0051	. 0051	. 0071	. 0071	. 0091	. 0091	0.012
1600	180	. 0037	. 0055	. 0055	. 0079	. 0079	. 0102	. 0102	0.013

Expansion-Type SPHERE-ROL® Bearings

A special version of the SPHERE-ROL® bearing can be provided for applications requiring the bearing to accommodate expansion (float) internally. This "expansion-type" SPHERE-ROL® bearing is specified and identified by adding the suffix letter "E" immediately following the diametral clearance specification. (For instance, SB-22319-C3E-W33.)

Most applications incorporating two bearings on a common shaft require that one of those bearings be "fixed" and that the other be free to "float," either in the housing seat bore or on the shaft seat. This float allowance, or expansion allowance, is required to compensate for variations in thermal expansion, or for linear dimension errors resulting from fabrication. In many cases, ordinary nonseparable ball or roller bearings are used for expansion but they are unsatisfactory because of housing or shaft seat diameter tolerances, the application of heavy loads or misalignment.

Spherical Engineering Section continued

Self-aligning bearings are preferred and the expansion-type SPHERE-ROL® roller bearing is the only internally self-aligning bearings having the capability of accommodating expansion or float allowance internally.

This expansion-type SPHERE-ROL® bearing is dimensionally interchangeable, size for size, with "standard" spherical roller bearings; but, because of changes in internal geometry, it does provide substantial axial play of one race ring relative to the other. The expansion allowance in this type SPHERE-ROL® bearing is normally as much as the end play or expansion allowance that would be found in a non-locating cylindrical roller bearing.

The "E" type SPHERE-ROL® bearing is available with the same sealing advantages, diametral clearance values, tapered bore and outer ring relubrication features as standard bearings shown on page D-25. The basic dynamic rating of "E" type SPHERE-ROL® bearings is 10% less than standard SPHERE-ROL® bearings. Maximum seal misalignment is limited due to increased axial play in bearing.

The expansion-type SPHERE-ROL® bearing will not operate satisfactorily if subjected to thrust loading. Therefore, the expansion-type SPHERE-ROL® bearing must not be used in "fixed" ("held") positions—it is for use only in "expansion" ("float") positions. It is recommended that the end-wise restraint of both race rings of the expansion-type bearing be provided, so that the expansion allowance intended to be available is not lost by error in installation.

Expansion-type SPHERE-ROL® bearings are not normally available from stock. Consult Customer Service for availability.

Spherical Engineering Section continued

Lubrication - SPHERE-ROL® Bearings

SPHERE-ROL® bearings as supplied are factory lubricated as follows. Consult Application Engineering regarding grease compatibility issues.

Lubricant	Bearing Type	Lubricant Temp. Limits (1)
NYLAPLATE® (-S, -SS) LAMBDA® (-YS, -YSS)	NLGI #2 EP grease, polyurea thickened	-30° to +300°F (-34° to 149°C)
High Temp. NYLAPLATE® (-TS, -TSS)	NLGI #2 high temp. grease, inorganic thickener	0° to +400°F (-18° to 204°C)
Unsealed	None, bearing coated with corrosion preventive oil	--

(1) Temperature limits are provided as a capability of the grease lubricant only.

Satisfactory bearing performance at these temperature limits can be dependent on proper lubrication maintenance, internal clearance, bearing materials and installation. Consult Application Engineering for recommendations.

Lubrication Maintenance

For most applications, due to speed, contamination or temperature conditions, some lubrication interval will be required for sealed SPHERE-ROL® bearings. As such, the sealed SPHERE-ROL® bearing can not typically be applied as a maintenance-free bearing. The “-W33” lubrication groove and holes in the outer ring outside diameter provides a means to add fresh grease or oil as applicable to the bearing through the housing. NYLAPLATE® seals have a venting feature which allows excess or old grease to purge from the bearing.

Frequency of lubrication depends primarily upon the speed of rotation of the bearing, the type of lubrication employed, the amount of contamination present and the relationship of thrust to radial loading. For continuously rotating applications, it is necessary to either provide continuous oil lubrication or else periodic grease lubrication, depending upon the severity of service. Automatic lubrication devices are ideal for intermittent lubrication, since accurate metering of grease and consistent relubrication is maintained through the use of these devices.

Best determination of relubrication interval can be made by testing or experience in the application. Contact Application Engineering for assistance in determining relubrication interval.

Spherical Engineering Section continued

Mounting Details - Spherical Roller Bearings
Cylindrical Bore

Proper mounting of SPHERE-ROL® spherical roller bearings generally requires a press fit of the ring rotating relative to the radial load. A close to loose fit is used for the ring stationary relative to the radial load. Specific shaft and housing fit selection and respective diameters are listed in the tables below and following pages. The following are some general guidelines and details to bear in mind when installing this bearing series.

1. Inspect housing and shaft.

- Clean, remove burrs and sharp edges.
- If any damage has occurred to the bearing seat in the housing or on the shaft, repair that damage to bring the seat surface back to its original condition.
- Ground shaft finishes are normally suggested. Consult Application Engineering if machined finish is to be used.
- When stationary outer rings are required to float (move axially in the housing bore to compensate for expansion), a housing bore surface finish of 65 microinches Ra is recommended.

2. Determine which member, shaft or housing has an interference fit with the bearing.

- In general, the ring rotating relative to the radial load has an interference fit.
- Refer to Shaft and Housing seat fit tables for respective fits and tolerances. For applications not covered by these tables, consult Application Engineering for recommendations.

3. Install the bearing onto the press-fitted member by applying force against the bearing ring that is press-fitted.

- For a press-fitted inner ring, apply the force required to assemble the bearing onto the shaft against the face of the bearing inner ring.
- For a press-fitted outer ring, apply the force required to assemble the bearing into the housing against the face of the bearing outer ring.
- Care should be exercised to assure that the bearing starts onto the press-fitted member as squarely as possible.
- Use arbor press whenever possible.
- Do not hammer on bearing ring face.

4. Inner rings press-fitted on the shaft may be more easily installed by heating the ring and causing it to shrink fit.

- Normally, heating the ring to 175°F to 212°F (79°C to 100°C) will be sufficient to allow the ring to slide over the interference fit shaft seat.
- Heating the ring should be accomplished with an induction heater or in a mineral oil bath. Never use a torch to heat a bearing for assembly purposes.
- Sealed bearings should not be heated in oil bath as the grease with which the bearings are filled may be affected.

Spherical Engineering Section continued

5. When outer rings are to be press-fitted into a housing, it is desirable to heat the housing to allow it to shrink fit onto the outer ring outside diameter.

- Freezing the bearing to shrink it for easy assembly into a press-fitted housing is not recommended. Water condensation can form inside the bearing upon its return to room temperature, which can lead to corrosion. Exposure to extreme cold can also affect the metallurgical structure of the bearing.

6. Proper caution should be exercised during installation to guard against axial preload of the bearing. This can be checked by:

- Endplay - Check for endwise “shake” which when present shows that the bearings as installed have endplay.
- Ease of Rotation - Rotate assembly by hand. The bearing must be free from unusual drag or noises.

CAUTION - During installation, do not misalign NYLAPLATE® sealed bearing more than 3° and LAMBDA® sealed bearings more than 1° or seal(s) may be damaged.

Mounting Details - Spherical Roller Bearings
Tapered Bore

SPHERE-ROL® bearings are available with tapered bore feature for applications utilizing tapered adapter sleeve mounting arrangements or tapered shaft seats. This feature sometimes facilitates the mounting of SPHERE-ROL® bearings and can be used to prevent the necessity for heating of bearings or to eliminate the need for complicated press fitting practices.

Standard tapered adapter sleeves, as well as associated lock nuts and lock washers, are tabulated on pages D-11 to D-18 and are identifiable with the appropriate bearing by the suffix number. The separate items may be called out individually by their part number or the complete tapered bore bearing and associated hardware may be identified by the suffix letter "A" following the bearing number. The standard bore taper of these bearings is 1" in 12", on the diameter, and tapered bore bearings are themselves identified by the suffix letter "K" following the basic bearing number.

In mounting, the bearing bore is forced against the taper of the split adapter sleeve or the tapered shaft seat by the action of a lock nut. A progressively tighter fit can be obtained by tightening the lock nut to increase the axial displacement of the bearing along the taper. Due to the need for greater take-up of internal clearance with this type of mounting, special internal clearances are provided. Care must be exercised to insure that the optimum take-up of internal clearance is followed. Too great a reduction of internal clearance will result in potential overheating of the bearing in many applications.

The mounting procedure for adapter mounted, tapered bore SPHERE-ROL® bearings does not require the use of feeler gauge or special gauging procedure. The basic principle of this measurement system is the use of the lock nut and lock washer as a protractor device. Because the lock nuts available for each basic bearing size are standard items, they are manufactured to specific thread pitches. Thus, the axial advancement for each revolution of the nut is predetermined, and the portions of revolutions of the lock nuts required to obtain the correct internal clearance reduction is also predetermined. Additionally, the standard lock washers have a specific number of tangs for each size, and these tangs can be used as the protractor for determining the correct portions of revolutions of the lock nuts. The basic procedure is as follows:

Spherical Engineering Section continued

1. To reduce friction and facilitate mounting, apply a medium weight oil to the bearing bore, the outside diameter of the adapter sleeve, all threads and the face of the lock nut.

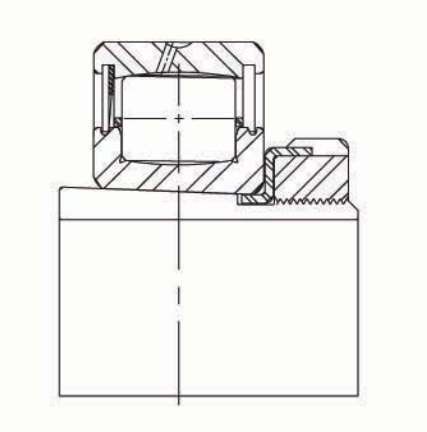

2. Mount the bearing on the tapered seat with a snug fit between the adapter bore and the shaft seat, with the lock nut and lock washer mounted snugly against the face of the bearing inner ring. (A snug fit is obtained when the adapter sleeve no longer rotates when the lock nut is tightened.) At this point, no internal clearance has been removed from the bearing and any advancement of the lock nut will result in reduction of internal clearance due to interference between the bearing bore and tapered seat.

3. Mark a lock washer tang in any suitable manner, and the adjacent, mating area of the lock nut.
4. Count in the direction of tightening, a certain number of tangs, specified at the right.
5. Mark the specified lock washer tang.

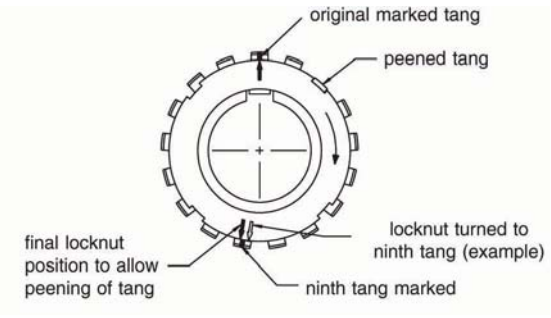

Spherical Engineering Section continued

6. Tighten the lock nut until the marked area on the lock nut is in line with the prescribed lock washer tang. (Lightly striking the face of the lock nut with a soft steel bar will reduce thread pressure and make tightening easier.)
7. If, at this point, none of the tangs line up directly with a corresponding slot in the lock nut OD, rotate the lock nut, in a tightening direction, the additional small amount required to line up the closest slot and tang.
8. The correct internal clearance has now been obtained and the lock washer tang can be peened into the slot of the lock nut, thereby locking the assembly.

The more common procedure used for determining the proper fit of spherical roller bearings on tapered seat is to measure the reduction of internal clearance of the bearing, upon mounting, through the use of feeler gauges or shim stock. This procedure can be utilized with the non-sealed SPHERE-ROL® bearing, if desired. The customer must initially measure and verify the clearance existing in the unmounted bearing, then press the bearing on the tapered seat until the specified amount of clearance has been removed, checking with the feeler gauges. The chart below gives the required diametral clearance reductions which should be used when the feeler gauging procedure is utilized.

Clearance reduction — (-K suffix)

Bearing Bore In Millimeters	Diametrical Clearance Reduction Inches	Lock Nut Turns Degrees	ABMA Lock Washer Number	Req'd No. of Lock Washer Tangs for Clearance Reduction
25	. 0009	277	W -05	10
30	. 0009	204	W -06	7
35	. 0009	204	W -07	9
40	. 0009	204	W -08	9
45	. 0010	215	W -09	10
50	. 0010	215	W -10	10
55	. 0010	215	W -11	10
60	. 0010	215	W -12	10
65	. 0010	215	W -13	11
70	. 0015	273	W -14	14
75	. 0015	146	W -15	8
80	. 0015	146	W -16	8
85	. 0015	146	W -17	8
90	. 0015	146	W -18	8
95	. 0015	146	W -19	8
100	. 0015	146	W -20	8
110	. 0020	177	W -22	9
120	. 0020	177	W -24	9
130	. 0025	207	W -26	11
140	. 0025	207	W -28	11
150	. 0030	238	W -30	13
180	. 0030	158	W -36	8

Spherical Bearing Engineering see page D-23.

For more information on bearing capabilities outside of our standard offering, please contact Application Engineering (800) 626-2093.

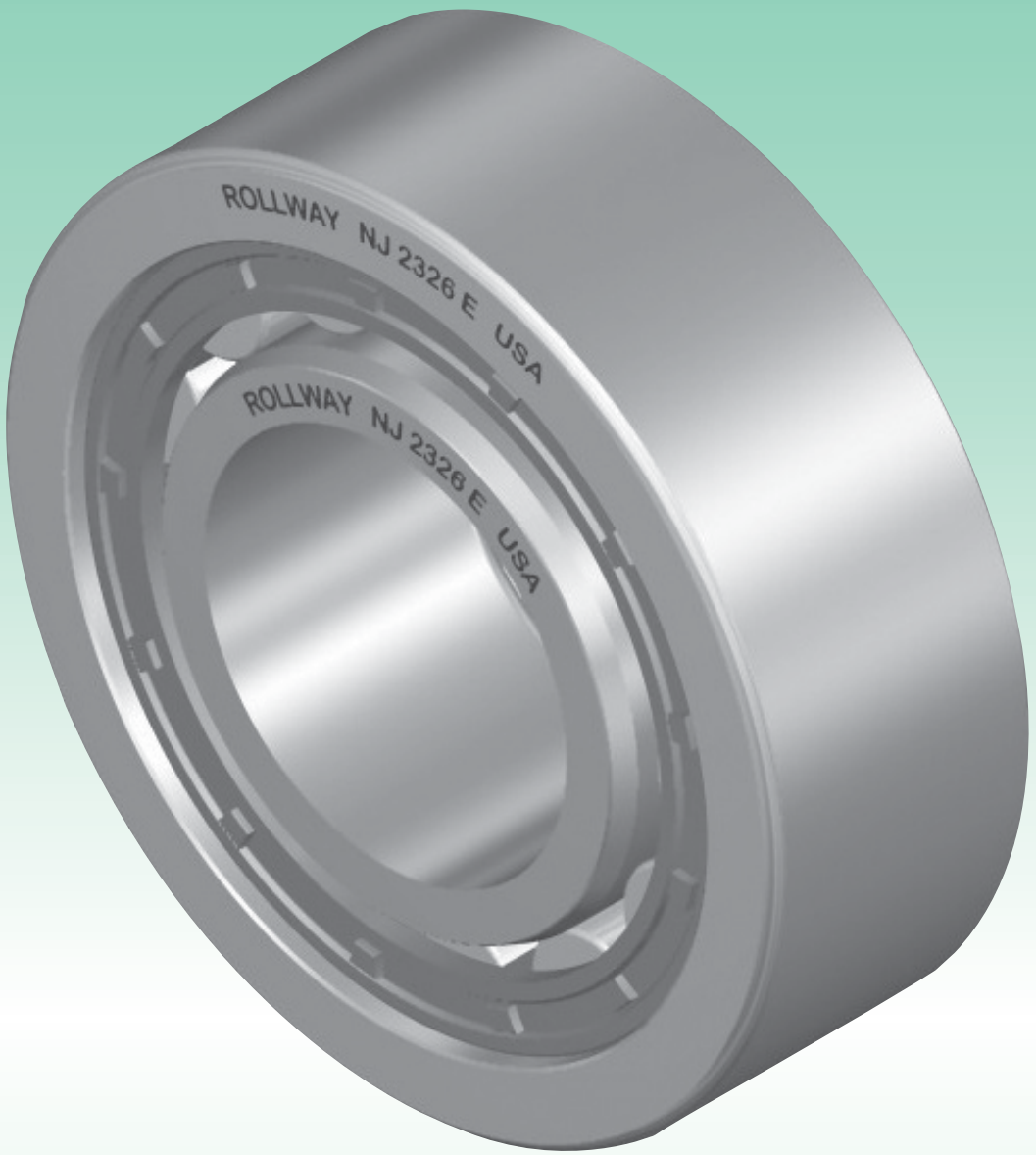
ROLLWAY NJ 2326 E USA
ROLLWAY NJ 2326 E USA

Radial

Unmounted bearing assembly consisting of through hardened inner and outer raceways with cylindrical rolling elements separated by steel, brass or cast iron retainers (cage). The retainer can be land or roller riding depending on the type of inner and outer raceway flange configuration. Radial roller bearings provide an antifriction solution when supporting rotating shafts with radial loads.

Bearing Configurations

Separable Or Non-Separable Inner/Outer Raceway

Flange Styles

Single, Double, Loose Flange

Bore Diameter Size Range

30 mm to 440 mm (1.181” to 17.323”)

Materials

Bearing Quality Steel

ROLLWAY® *Radial Bearings*

Radial Selection Guide

			Flange Pictoral						
			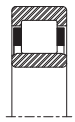	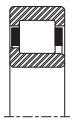		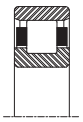		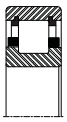	
		Description	Inner Race Separable, both Directions	Inner race separable, one direction	Two piece inner race, four flange design	Outer race separable in both directions	Outer race separable, one direction	Non separable	Size Range
	ISO	NU-xxxx-E	X						35mm - 140mm
	Tru-Rol	E-xxxx-U	X						30mm - 280mm
	Tru-Rol	E-xxxx-B	X						30mm - 160mm
	Max	MUC-xxx	X						140mm - 440mm
	ISO	NJ-xxxx-E		X					35mm - 140mm
	Tru-Rol	L-xxxx-U		X					30mm - 300mm
	Max	MUL-xxxx		X					140mm - 440mm
	Tru-Rol	U-xxxx-B						X	30mm - 150mm

***For estimating purpose only, individually sizes may vary and are subject to change without notification**

Design Characteristics				Features						
Radial Load	Thrust Load	High Speed	Relative Base Cost *	Stamped Steel Retainer	Segmented Steel Retainer	Two Piece Brass Retainer	One Piece Brass Retainer	Full complement of Rollers / no retainer	Radial Clearances Greater/less then standard	Page No.
◒	○	◒	$$	Opt	Opt	S	Opt	N/A	Opt	E-16
◒	○	◒	$	Opt	S	Opt	Opt	N/A	Opt	E-16
◒	○	◒	$	Opt	S	Opt	Opt	N/A	Opt	E-16
◒	○	◒	$$	Opt	Opt	S	Opt	N/A	Opt	E-28
◒	◒	◒	$$	Opt	Opt	S	Opt	N/A	Opt	E-16
◒	◒	◒	$	Opt	S	Opt	Opt	N/A	Opt	E-16
◒	○	◒	$$	Opt	Opt	S	Opt	N/A	Opt	E-28
◒	◒	◒	$	Opt	S	Opt	N/A	N/A	Opt	E-16

Low Speed
Medium Speed
Medium to High Speed
Land Riding, High Speed.
Higher Capacity / Lower Speed
For Specific Applications

Opt = Optional
S = Standard
○ = Not Recommended

◒ ◒ ◒ ◒ ●

Poor ←→ Best

ROLLWAY® *Radial Bearings*

Radial Selection Guide

			Flange Pictoral						
			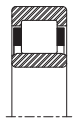	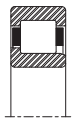	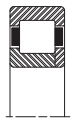	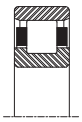	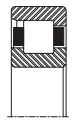	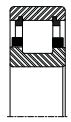	
		Description	Inner Race Separable, both Directions	Inner race separable, one direction	Two piece inner race, four flange design	Outer race separable in both directions	Outer race separable, one direction	Non separable	Size Range
	ISO	N-xxxx-E				X			35mm - 140mm
	Tru-Rol	U-xxxx-E				X			30mm - 300mm
	Max	MCS-xxxx				X			140mm - 440mm
	Tru-Rol	U-xxxx-L					X		30mm - 300mm
	Max	ML-xxxx					X		140mm - 440mm
	ISO	NUP-xxx-E			X				35mm - 140mm
	Tru-Rol	LP-xxxx-U			X				30mm - 300mm
	Max	MU-xxxx			X				140mm - 440mm

***For estimating purpose only, individually sizes may vary and are subject to change without notification**

Design Characteristics				Features						
Radial Load	Thrust Load	High Speed	Relative Base Cost *	Stamped Steel Retainer	Segmented Steel Retainer	Two Piece Brass Retainer	One Piece Brass Retainer	Full complement of Rollers / no retainer	Radial Clearances Greater/less then standard	Page No.
◒	○	◒	$$	Opt	Opt	S	Opt	N/A	Opt	E-16
◒	○	◒	$	Opt	S	Opt	Opt	N/A	Opt	E-16
◒	○	◒	$$	Opt	Opt	S	Opt	N/A	Opt	E-28
◒	◒	◒	$	Opt	S	Opt	Opt	N/A	Opt	E-16
◒	◒	◒	$$	Opt	Opt	S	Opt	N/A	Opt	E-28
◒	◒	◒	$$	Opt	Opt	S	Opt	N/A	Opt	E-16
◒	◒	◒	$	Opt	S	Opt	Opt	N/A	Opt	E-16
◒	◒	◒	$$	Opt	Opt	S	Opt	N/A	Opt	E-28

Low Speed
Medium Speed
Medium to High Speed
Land Riding, High Speed.
Higher Capacity / Lower Speed
For Specific Applications

Opt = Optional
S = Standard
○ = Not Recommended

◒ ◒ ◒ ◒ ●

Poor ⟷ Best

Rollway Radial Roller Bearings

Rollway Radial bearings utilize crowned cylindrical rollers for more dynamic capacity and longer life than comparable ball bearings. These bearings also feature through hardened bearing quality steel raceways and a variety of retainer (cage) options depending on the load/speed requirements of the application (Rollway radial roller bearings are available with standard clearance, as well as clearance ranges greater and less than standard, in order to accommodate application requirements). Depending on your preference, these bearings are available in a wide variety of sizes and options as illustrated on the pages to follow.

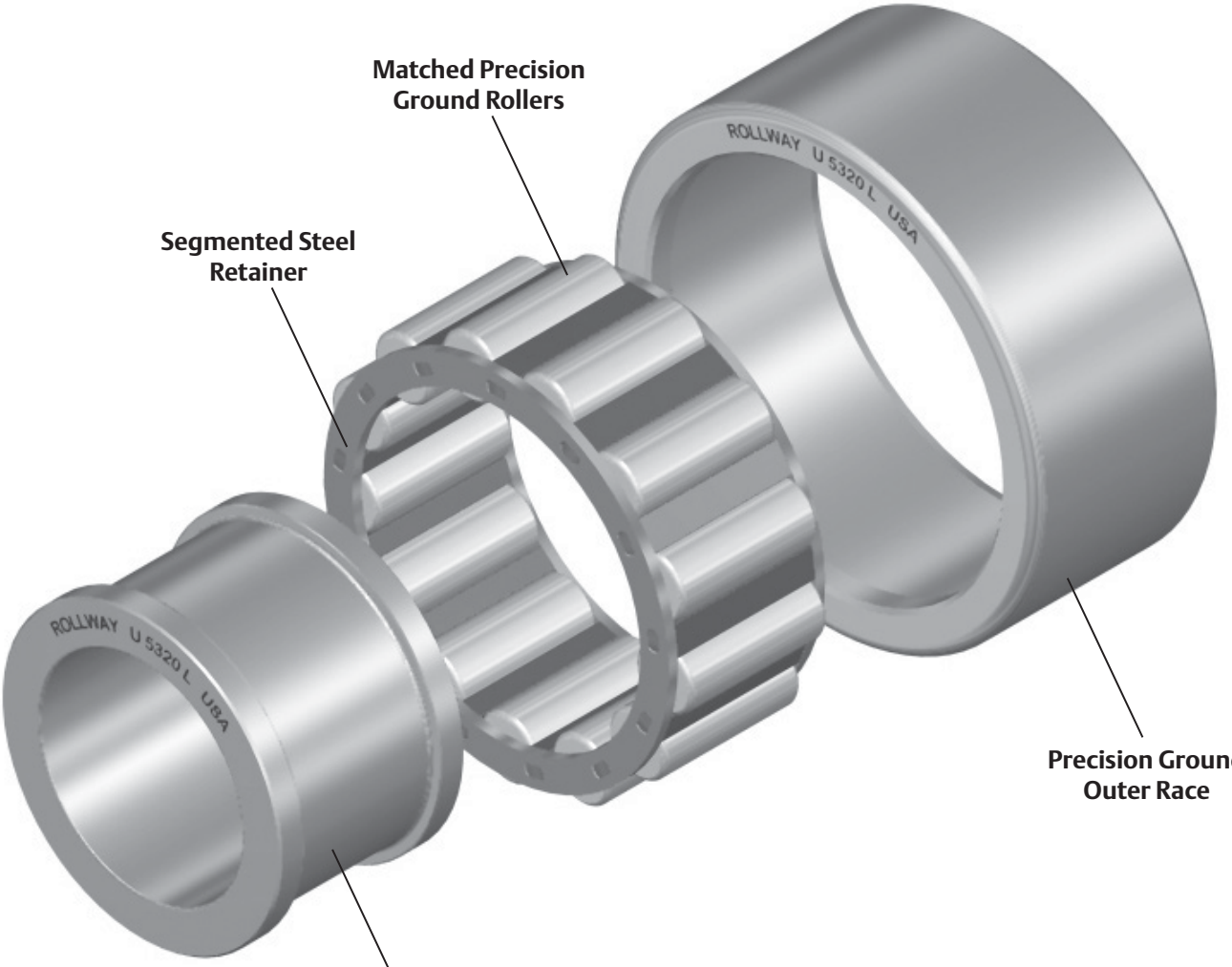

Rollway Radial Roller Nomenclature
TRU-ROL Numbering

Prefix
Inner Race Description

Size Designator
Available Series

Suffix
Outer Race Description

Variation Code
Variation Codes Are Divided Into Two Categories; Special And Standard.

E 1212 U 199

Prefix

E - Inner Race Separable Both Directions.
L - Inner Race Separable One Direction.
LP - Two-Piece Inner Race, One Part Is Separable One Direction, The Other Is A Thrust Plate To Form A Channeled Race Assembly.
U - Inner Race With Two Flanges, Non-Separable.
UM - Inner Race With Two Flanges, Non-Separable, Full Complement Of Rollers.
None - No Inner Race Supplied.

Size Designator

Available Series; 1000, 1200, 1300, 5200, 5300 And 6200.

Suffix

E (EMR) - Outer Race Separable Both Directions.
L (LMR) - Outer Race Separable One Direction.
LP (LPMR) - Two-Piece Outer Race, One Part Is Separable One Direction, The Other A Thrust Plate To Form A Channeled Race Assembly.
U (UMR) - Outer Race With Two Flanges, Non Separable.
B- Outer Race With Two Snap Rings To Retain The Roller Set, Non-Separable.
J - Outer Race With One Snap Ring And One Flange To Retain The Roller Set, Non Separable.

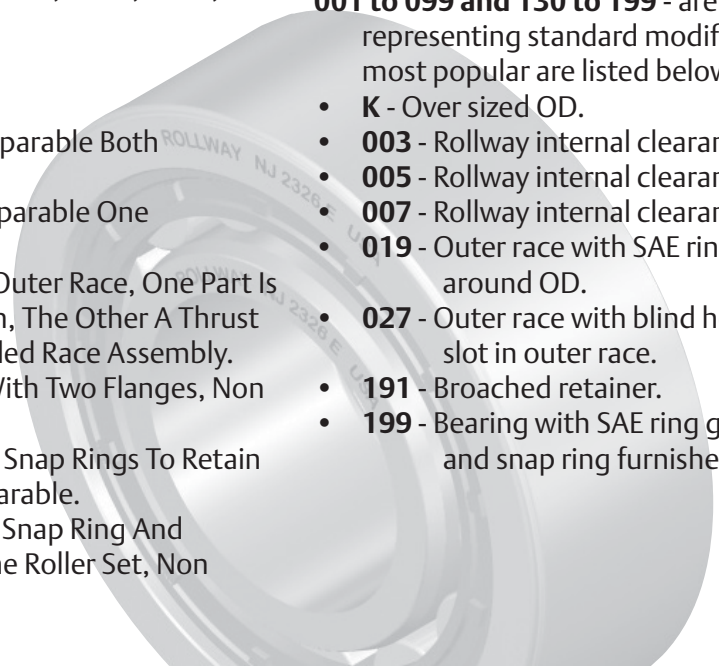

Variation Codes
Special variation codes

101 to 129 - are numerically assigned codes that designate the variation from standard (example 101 = 1st variation,102 = 2nd variation, etc.). These bearing code numbers do not in any way reference the modification from standard. Application Engineering must be contacted for information concerning a particular modification.

Standard variation codes

001 to 099 and 130 to 199 - are code numbers representing standard modifications. The most popular are listed below:

- **K** - Over sized OD.
- **003** - Rollway internal clearance Class 3.
- **005** - Rollway internal clearance Class 5.
- **007** - Rollway internal clearance Class 7.
- **019** - Outer race with SAE ring groove around OD.
- **027** - Outer race with blind hole or locating slot in outer race.
- **191** - Broached retainer.
- **199** - Bearing with SAE ring groove on OD and snap ring furnished.

Rollway Radial Roller Nomenclature
MAX Numbering

Prefix
Bearing Configuration Description

Size Designator
Available Series

Variation Code
Variation Codes Are Divided Into Two Categories; Special And Standard.

MCS 5222 103

Prefix

ML - Bearing assembly with roller assembly retained in inner race, outer race separable one direction.

MCS - Bearing assembly with roller assembly retained in inner race, outer race separable both directions.

MN - Bearing assembly with roller assembly retained in inner race. Two-piece outer race, one part is separable one direction, the other is a thrust plate to form a channel race.

MS - Bearing assembly with roller assembly retained in inner race. Outer race with two snap rings to retain the roller set, non-separable.

M - Bearing assembly with roller assembly retained in inner race. Outer race with two snap rings to retain the roller set, non-separable with a full complement of rollers.

MUC - Bearing assembly with inner race separable both directions. Roller assembly retained in outer race.

MUL - Bearing assembly with inner race separable one direction. Roller assembly retained in outer race.

MU - Bearing with a two-piece inner race, one part is separable one direction, the other is a thrust plate to forma channeled race. Outer race retains the roller assembly.

MR - Bearing with a two-piece inner race, one part is separable one direction, the other is an HJ ring to form a channel race. Outer race retains the roller assembly.

Size Designator

Available series; 100, 200, 300, 5000 and 5100.

Variation Codes

Special variation codes

101 to 199 - are numerically assigned codes that designate the numerical variation from standard (example 101 = 1st variation, 102 = 2nd variation, etc.). These bearing code numbers do not in any way reference the modification from standard. Application Engineering must be contacted for information concerning a particular modification.

Standard variation codes

001 to 099 - are code numbers representing standard modifications. The most popular are listed below:

- **003** - Rollway internal clearance Class 3.
- **005** - Rollway internal clearance Class 5.
- **007** - Rollway internal clearance Class 7.

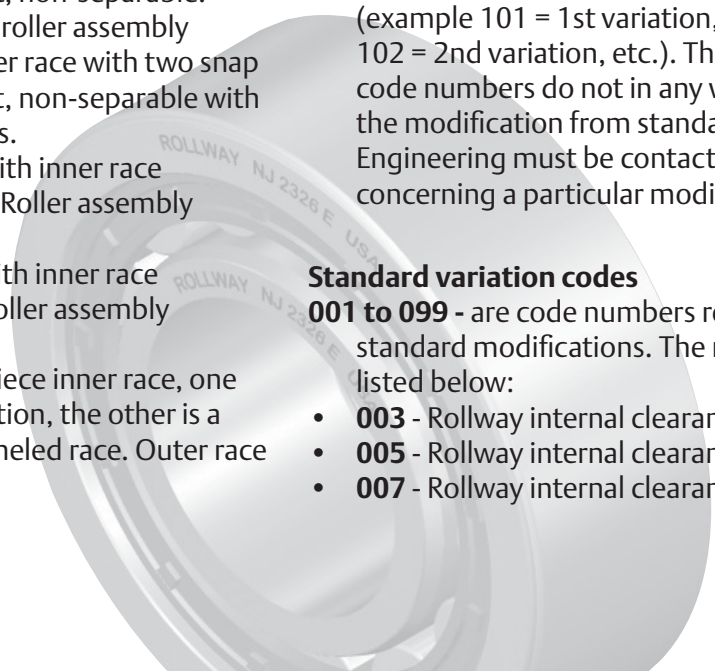

Rollway Radial Roller Nomenclature ISO Numbering

Prefix
Bearing Configuration Description

Size Designator
Available Series

Variation Code
Variation Codes Are Divided Into Two Categories; Special And Standard.

NU 320 EMC3

Prefix

NU - Bearing assembly with inner race separable both directions. Roller assembly retained in outer race.

NUP - Bearing with a two piece inner race, one part is separable one direction, the other is a thrust plate to form a channeled race. Outer race retains the roller assembly.

NJ - Bearing assembly with inner race separable one direction. Roller assembly retained in outer race.

N - Bearing assembly with roller assembly retained in inner race. Outer race separable both directions.

Size Designator

Available series; 200, 300, 2200 and 2300.

Variation Codes

Special variation codes

VAA - begins an alpha code assigned to designate the variation from standard (example VAA = 1st variation, VAB =2nd variation, etc.). These bearing codes do not in any way reference the modification from standard. Application Engineering must be contacted for information concerning a particular modification.

Standard variation codes

Are code numbers representing standard modifications. The most popular are listed below:

- **E -** Extra capacity design
- **M -** Machined brass retainer
- **C2 -** ABMA internal clearance symbol 2
- **C3 -** ABMA internal clearance symbol 3
- **C4 -** ABMA internal clearance symbol 4
- **S1 -** Bearing is stabilized for operation at 390°F

Features and Benefits

Unmounted Internal Clearances

Rollway's standard is C3, though other unmounted internal clearances are readily available.

Retainers

Standard retainer options include segmented steel or machined brass, which are detailed on the following pages.

Precision Ground Inner and Outer Races

Races are manufactured from through hardened bearing grade steel. Surfaces are precision ground to RBEC 1 and stabilized to 335°F.

Features and Benefits

Matched Precision Crowned Rollers

All radial rollers are crowned. Extra capacity bearing designs have larger rollers, maximizing the load carrying potential of the bearing's cross sectional area. Crowned rollers yield a more evenly distributed load pattern on the races, resulting in longer life. All Rollway cylindrical and tapered bearings feature crowned rollers.

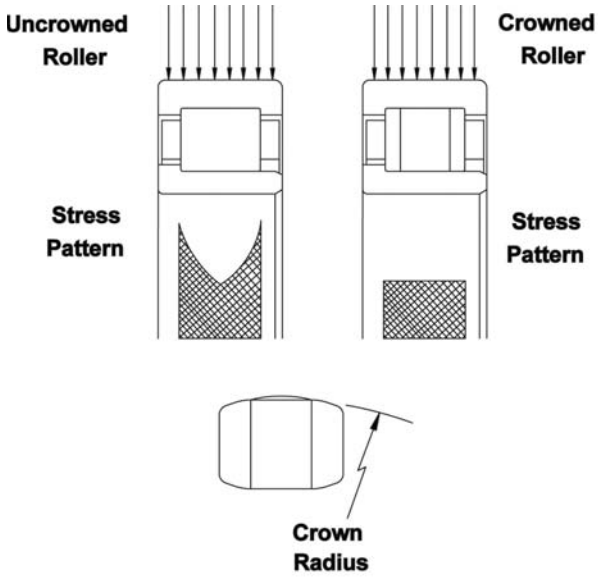

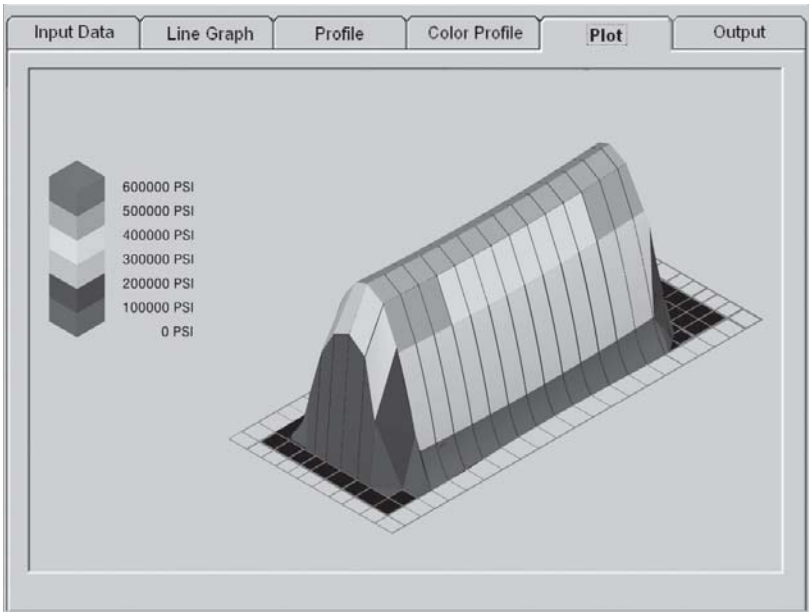

Options

Stamped Steel Retainer

A one-piece, steel stamping. Supplied on some bearings with snap ring retention. (TRU-ROL numbering suffix of “R”) Recommended for low speed operations.

- Stamped Steel
- Rides below pitch circle
- Low Speed
- Used only with Outer Race or Retaining rings
- Rollers guided by raceway flanges
- Well suited for volume production
- Inexpensive in comparison to other retainers

Segmented Steel Retainer

A built-up type of retainer utilizing steel segments rigidly held between stamped, steel end plates. This is the standard retainer supplied with commercial bearings identified with the TRU-ROL numbering system. Recommended for moderate speed applications.

- Formed steel segments held between two steel end plates
- Good roller guidance with minimizing friction
- Flexible – accommodates different widths
- This retainer design is well adapted for volume production

Two-Piece Retainer

This type of retainer is fabricated from brass. This is the standard retainer supplied with Rollway bearings identified with the MAX numbering system, ISO numbering system, TRU-ROL numbering system when the “MR” suffix is used, and any bearing with bore size over 180mm. Recommended for moderate to high speed applications.

- Accurate roller guidance
- Machined Pockets to minimize skewing
- Typically made of brass, cast iron is available for applications where brass cannot be used
- Higher speed applications
- Recommended when torsional loading on retainer is severe.
- Available with most radial roller

Options continued

One-Piece Retainer

This land piloting retainer is fabricated from brass or steel with radial retention of the rollers provided by closing the roller "pocket" with small projections formed by mechanically upsetting the retainer material. This retainer design is typically made to order for high speed applications, though it is applicable for other applications. It should be noted that retainers may be designed for specific applications to enhance bearing performance. Please contact Application Engineering for more information.

- High speed applications
- Made of brass or silver plated steel
- Land riding, minimizing friction between the rollers and the retainer
- Special order only

Race and Roller Material

The races and rollers in standard Rollway bearings are made of high alloy, through-hardened and/or case carburized steels that are stabilized for operation up to 250°F for case carburized steel and 335°F for through-hardened steels. For operating temperatures in excess of 335°F, special materials and/or stabilization procedures are necessary.

Vacuum-degassed steels are used in standard bearings; however, consumable-electrode remelted steels (from either air CEVM or vacuum-melted electrodes VIMVAR) are available in all alloys and will be supplied upon request.

We also manufacture low quantities of bearing designs with M-50 tool steel for applications requiring high temperature hardness and average operating temperatures over 400°F but less than 800°F.

ROLLWAY® *Radial Bearings*

Basic Construction Type: Cylindrical Roller Bearing

Rolling Elements: Crowned Cylindrical Rollers

Bearing Material: Through Hardened Bearing Grade Steel

Retainer Type: Stamped Steel, Segmented Steel, Two Piece Brass, One Piece Land Riding Brass

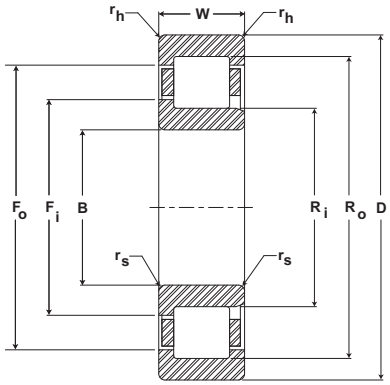

Cylindrical Roller Bearings

B	D	W	Rs	Rh	C	Co	Fi	Ri	Fo	Ro	Bearing Weight
Bore	Outside Diameter	Width	Corner*		Basic Dynamic Rating	Basic Static Rating	Flange O.D. Inner Race	O.D. Inner Race	Flange I.D. Outer Race	I.D. Outer Race	
mm inch	mm inch	mm inch	mm inch	mm inch	N/lb	N/lb	mm inch	mm inch	mm inch	mm inch	kg lb
30 1.1811	62 2.4409	16 .6299	1.0 .039	1.0 .039	31,942 7,130	31,002 6,920	41.3 1.626	38.0 1.490	51.2 2.030	54.0 2.126	0.2 0.4
		23.8 .9375	1.0 .039	1.0 .039	47,533 10,610	51,654 11,530	41.3 1.626	38.0 1.498	51.2 2.016	54.0 2.126	0.4 0.9
	72 2.8346	19 .7480	1.5 .059	1.0 .039	44,486 9,930	42,605 9,510	44.6 1.756	40.7 1.602	56.9 2.239	60.4 2.378	0.5 1.1
		30.2 1.1875	1.5 .059	1.0 .039	70,918 15,830	77,683 17,340	44.6 1.756	40.7 1.602	56.9 2.239	60.4 2.378	0.6 1.3
35 1.3780	72 2.8346	17 .6693	1.0 .039	1.0 .039	38,304 8,550	37,094 8,280	48.0 1.890	44.0 1.732	59.4 2.340	62.4 2.457	0.3 0.7
		27 1.0625	1.0 .039	1.0 .039	62,541 13,960	69,754 15,570	48.0 1.890	44.0 1.732	59.4 2.340	62.4 2.457	0.5 1.1
		54 2.1250	1.0 .039	1.0 .039	107,206 23,930	139,462 31,130	48.0 1.890	44.0 1.732	59.4 2.340	62.4 2.457	1.0 2.2
	80 3.1496	21 .8268	1.5 .059	1.0 .039	67,155 14,990	66,394 14,820	51.2 2.016	46.2 1.819	65.4 2.575	70.2 2.764	0.5 1.1
			1.5 .059	1.5 .059	58,150 12,980	59,584 13,300	51.1 2.012	46.8 1.844	64.2 2.526	67.9 2.673	0.5 1.1
		34.9 1.3750	1.5 .059	1.5 .059	87,898 19,620	101,427 22,640	51.1 2.012	46.8 1.844	64.2 2.526	67.9 2.673	0.9 2.0
40 1.5748	80 3.1496	18 .7087	1.5 .059	1.0 .039	46,234 10,320	46,906 10,470	53.4 2.102	49.9 1.966	66.1 2.602	69.6 2.740	0.5 1.1
		30 1.1875	1.5 .059	1.0 .039	79,296 17,700	93,856 20,950	53.4 2.102	49.9 1.966	66.1 2.602	69.6 2.740	0.7 1.5
	90 3.5433	23 .9055	1.5 .059	1.5 .059	82,880 18,500	81,581 18,210	57.7 2.272	52.0 2.047	74.4 2.929	80.0 3.150	0.7 1.5
			1.5 .059	1.5 .059	69,978 15,620	69,440 15,500	57.4 2.260	52.6 2.059	73.1 2.878	77.9 3.067	0.8 1.8
		36.5 1.4375	1.5 .059	1.5 .059	110,522 24,670	124,992 27,900	57.4 2.260	52.6 2.059	73.1 2.878	77.9 3.067	1.3 2.9
45 1.7717	85 3.3465	19 .7480	1.5 .059	1.0 .039	63,571 14,190	67,469 15,060	59.1 2.327	54.5 2.146	72.1 2.839	76.5 3.012	0.6 1.3
			1.5 .059	1.0 .039	51,430 11,480	55,552 12,400	59.4 2.339	55.5 2.186	71.5 2.815	74.9 2.949	0.5 1.1
		30.2 1.1875	1.5 .059	1.0 .039	82,029 18,310	101,248 22,600	59.4 2.339	55.5 2.186	71.5 2.815	74.9 2.949	0.8 1.8
	100 3.9370	49.7 1.5625	2.0 .079	1.5 .059	136,998 30,580	163,878 36,580	64.8 2.551	59.4 2.337	81.3 3.201	86.1 3.390	1.7 3.7
		25 .9843	1.5 .059	1.5 .059	100,262 22,380	102,592 22,900	64.6 2.543	58.5 2.303	82.5 3.248	88.5 3.484	1.0 2.2
			2.0 .079	1.5 .059	88,301 19,710	93,184 20,800	64.8 2.551	59.4 2.337	81.3 3.201	86.1 3.390	1.0 2.2

Radial Roller bearings and manufactured to the ABMA RBEC-1 tolerance class. Bearing manufactured to either RBEC-3, RBEC-5 or special tolerance classes are also available upon request.
Unless otherwise specified all Rollway radial roller bearings are manufactured to ABMA's RBEC-1 precision class.
*rs and rh are the maximum shaft and housing fillet radius that can be cleared.
Metric dimensions for reference only.

Not all parts are available from stock. Please contact customer service for availability (800) 626-2120.
For more information on bearing capabilities outside of our standard offering, please contact Application Engineering (800) 626-2093.

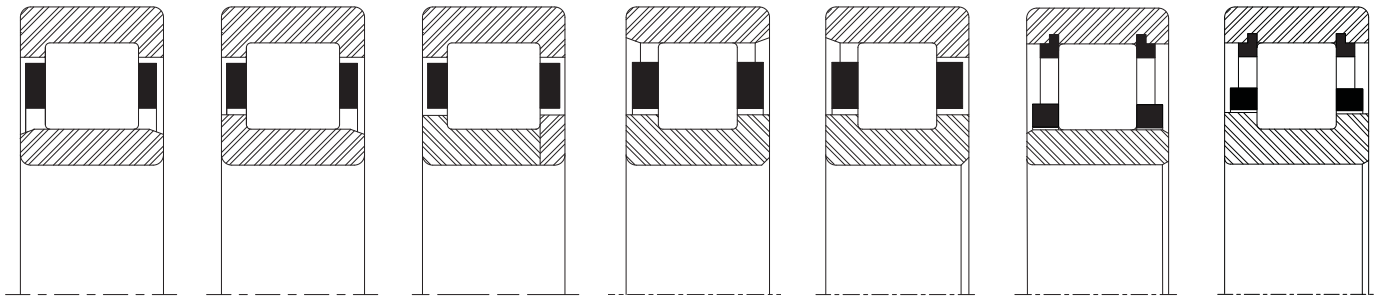

Cylindrical Roller Bearings

Inner Race Separable Both Directions	Inner Race Separable One Direction	Two Piece Inner Race Four-Flange Design	Outer Race Separable Both Directions	Outer Race Separable One Direction	Inner Race Separable Both Directions	Non-Separable
E 1206 U	L 1206 U	LP 1206 U	U 1206 E	U 1206 L	E 1206 B	U 1206 B
E 5206 U	L 5206 U	LP 5206 U	U 5206 E	U 5206 L	E 5206 B	U 5206 B
E 1306 U	L 1306 U	LP 1306 U	U 1306 E	U 1306 L	E 1306 B	U 1306 B
E 5306 U	L 5306 U	LP 5306 U	U 5306 E	U 5306 L	E 5306 B	U 5306 B
E 1207 U	L 1207 U	LP 1207 U	U 1207 E	U 1207 L	E 1207 B	U 1207 B
E 5207 U	L 5207 U	LP 5207 U	U 5207 E	U 5207 L	E 5207 B	U 5207 B
E 6207 U	L 6207 U	LP 6207 U	U 6207 E	U 6207 L	E 6207 B	U 6207 B
NU 307 U	NJ 307 E	NUP 307 E	N 307 E	-	-	-
E 1307 U	L 1307 U	LP 1307 U	U 1307 E	U 1307 L	E 1307 B	U 1307 B
E 5307 U	L 5307 U	LP 5307 U	U 5307 E	U 5307 L	E 5307 B	U 5307 B
E 1208 U	L1208 U	LP1208 U	U 1208 E	U 1208 L	E1208 B	U 1208 B
E 5208 U	L 5208 U	LP 5208 U	U 5208 E	U 5208 L	E 5208 B	U 5208 B
NU 308 U	NJ 308 E	NUP 308 E	N 308 E	-	-	-
E 1308 U	L 1308 U	LP 1308 U	U 1308 E	U 1308 L	E 1308 B	U 1308 B
E 5308 U	L 5308 U	LP 5308 U	U 5308 E	U 5308 L	E 5308 B	U 5308 B
NU 209 E	NJ 209 E	NUP 209 E	N 209 E	-	-	-
E 1209 U	L 1209 U	LP 1209 U	U 1209 E	U 1209 L	E 1209 B	U 1209 B
E 5209 U	L 2509 U	LP 2509 U	U 2509 E	U 2509 L	E 2509 B	U 2509 B
E 5309 U	L 5309 U	LP 5309 U	U 5309 E	U 5309 L	E 5309 B	U 5309 B
NU 309 E	NJ 309 E	NUP 309 E	N 309 E	-	-	-
E 1309 U	L 1309 U	LP 1309 U	U 1309 E	U 1309 L	E 1309 B	U 1309 B

ROLLWAY® *Radial Bearings*

Basic Construction Type: Cylindrical Roller Bearing

Rolling Elements: Crowned Cylindrical Rollers

Bearing Material: Through Hardened Bearing Grade Steel

Retainer Type: Stamped Steel, Segmented Steel, Two Piece Brass, One Piece Land Riding Brass

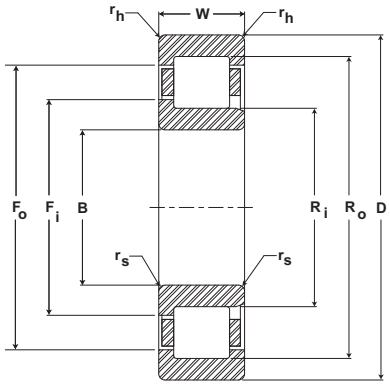

Cylindrical Roller Bearings

B	D	W	Rs	Rh	C	Co	Fi	Ri	Fo	Ro	Bearing Weight
Bore	Outside Diameter	Width	Corner*		Basic Dynamic Rating	Basic Static Rating	Flange O.D. Inner Race	O.D. Inner Race	Flange I.D. Outer Race	I.D. Outer Race	
mm inch	mm inch	mm inch	mm inch	mm inch	N/lb	N/lb	mm inch	mm inch	mm inch	mm inch	kg lb
50 1.9685	90 3.5433	20 .7874	1.0 .039	1.0 .039	66,528 14,850	73,024 16,300	64.1 2.524	59.5 2.343	77.1 3.035	81.5 3.209	0.6 1.3
			1.5 .059	1.0 .039	52,416 11,700	58,957 13,160	64.4 2.535	60.5 2.382	76.6 3.015	79.5 3.130	0.6 1.3
		30.2 1.1875	1.5 .059	1.0 .039	83,597 18,660	107,430 23,980	64.4 2.535	60.5 2.382	76.7 3.018	79.5 3.130	0.9 2.0
		60.3 2.3750	1.5 .059	1.0 .039	143,360 32,000	214,861 47,960	64.4 2.535	60.5 2.382	76.7 3.018	79.5 3.130	1.7 3.7
	110 4.3307	27 1.0630	2.0 .079	2.0 .079	113,210 25,270	117,779 26,290	71.4 2.811	65.0 2.559	90.6 3.567	97.0 3.819	1.3 2.9
			1.5 .059	1.5 .059	102,816 22,950	109,357 24,410	71.0 2.795	65.2 2.565	89.2 3.512	94.5 3.720	1.3 2.9
		40 1.5748	1.5 .059	1.5 .059	165,760 37,000	192,326 42,930	71.4 2.811	65.2 2.565	89.2 3.512	97.0 3.819	1.9 4.2
		44.5 1.7475	1.5 .059	1.5 .059	161,683 36,090	195,731 43,690	71.0 2.795	65.0 2.559	89.2 3.512	94.5 3.720	2.3 5.1
55 2.1654	100 3.9370	21 .8268	2.0 .079	1.5 .059	86,957 19,410	100,262 22,380	70.9 2.791	66.0 2.598	85.2 3.354	90.0 3.543	0.7 1.5
			2.0 .079	1.5 .059	65,318 14,580	75,443 16,840	71.1 2.799	66.9 2.634	84.2 3.316	88.0 3.465	1.0 2.2
		33.3 1.3125	2.0 .079	2.0 .079	105,862 23,630	140,358 31,330	71.1 2.799	66.9 2.634	84.2 3.316	88.0 3.465	0.5 1.1
	120 4.7244	29 1.1417	2.0 .079	2.0 .079	139,552 31,150	146,496 32,700	77.6 3.055	70.5 2.776	99.3 3.909	106.5 4.193	1.6 3.5
			2.0 .079	2.0 .079	116,301 25,960	123,738 27,620	77.9 3.067	71.4 2.812	97.8 3.851	103.6 4.079	1.6 3.5
		43 1.6929	2.0 .079	2.0 .079	203,571 45,440	238,067 53,140	77.6 3.055	70.5 3.031	99.3 4.228	106.5 4.193	2.4 5.3
		49.2 1.9375	2.0 .079	2.0 .079	199,405 44,510	247,027 55,140	77.9 3.067	71.4 2.812	97.8 3.850	103.6 4.079	2.8 6.2
60 2.3622	110 4.3307	22 .8661	1.5 .059	1.5 .059	97,126 21,680	107,251 23,940	77.7 3.059	72.0 2.835	94.4 3.717	100.0 3.937	1.0 2.2
			2.0 .079	1.5 .059	80,819 18,040	89,958 20,080	76.9 3.028	72.4 2.850	93.2 3.670	97.7 3.846	1.0 2.2
		36.5 1.4375	2.0 .079	1.5 .059	136,192 30,400	176,019 39,290	76.9 3.028	72.4 2.850	93.2 3.670	97.7 3.846	1.6 3.5
		73 2.8750	2.0 .079	1.5 .059	233,498 52,120	351,994 78,570	76.9 3.028	72.4 2.850	93.2 3.670	97.7 3.846	3.1 6.8
	130 5.1181	31 1.2205	2.0 .079	2.0 .079	154,560 34,500	164,550 36,730	84.5 3.327	77.0 3.031	107.4 4.228	115.0 4.528	2.0 4.4
			2.5 .098	2.0 .079	135,475 30,240	145,914 32,570	84.6 3.331	77.5 3.053	106.3 4.187	112.4 4.425	2.0 4.4
		46 1.8110	2.0 .079	2.0 .079	227,629 50,810	270,682 60,420	84.5 3.327	77.0 3.031	107.4 4.228	115.0 4.528	2.5 5.5
		54 2.1250	2.5 .098	2.0 .079	239,411 53,440	303,341 67,710	84.6 3.331	77.5 3.053	106.3 4.190	112.4 4.425	3.9 8.6

Radial Roller bearings and manufactured to the ABMA RBEC-1 tolerance class. Bearing manufactured to either RBEC-3, RBEC-5 or special tolerance classes are also available upon request.
Unless otherwise specified all Rollway radial roller bearings are manufactured to ABMA's RBEC-1 precision class.
*rs and rh are the maximum shaft and housing fillet radius that can be cleared.
Metric dimensions for reference only.

Not all parts are available from stock. Please contact customer service for availability (800) 626-2120.
For more information on bearing capabilities outside of our standard offering, please contact Application Engineering (800) 626-2093.

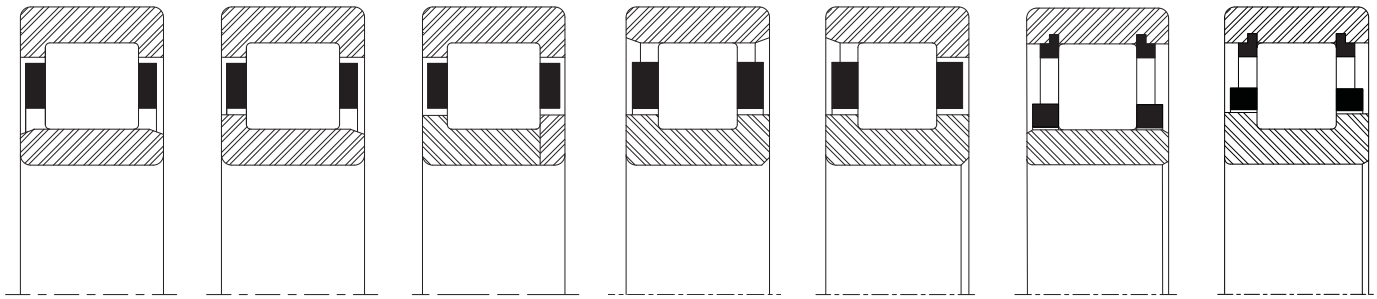

Cylindrical Roller Bearings

Inner Race Separable Both Directions	Inner Race Separable One Direction	Two Piece Inner Race Four-Flange Design	Outer Race Separable Both Directions	Outer Race Separable One Direction	Inner Race Separable Both Directions	Non-Separable
NU 210 E	NJ 201 E	NUP 201 E	N 201 E	-	-	-
E 1210 U	L 1210 U	LP 1210 U	U 1210 E	U 1210 L	E 1210 B	U 1210 B
E 5210 U	L 5210 U	LP 5210 U	U 5210 E	U 5210 L	E 5210 B	U 5210 B
E 6210 U	L 6210 U	LP 6210 U	U 6210 E	U 6210 L	E 6210 B	U 6210 B
NU 310 E	NJ 310 E	NUP 310 E	N 310 E	-	-	-
E 1310 U	L 1310 U	LP 1310 U	U 1310 E	U 1310 L	E 1310 B	U 1310 B
NU 2310 E	NJ 2310 E	NUP 2310 E	N 2310 E	-	-	-
E 5310 U	L 5310 U	LP 5310 U	U 5310 E	U 5310 L	E 5310 B	U 5310 B
NU 211 E	NJ 211 E	NUP 211 E	N 211 E	-	-	-
E 1211 U	L 1211 U	LP 1211 U	U 1211 E	U 1211 L	E 1211 B	U 1211 B
E 5211 U	L 5211 U	LP 5211 U	U 5211 E	U 5211 L	E 5211 B	U 5211 B
NU 311 E	NJ 311 E	NUP 311 E	N 311 E	-	-	-
E 1311 U	L 1311 U	LP 1311 U	U 1311 E	U 1311 L	E 1311 B	U 1311 B
NU 2311 E	NJ 2311 E	NUP 2311 E	N 2311 E	-	-	-
E 5311 U	L 5311 U	LP 5311 U	U 5311 E	U 5311 L	E 5311 B	U 5311 B
NU 212 E	NJ 212 E	NUP 212 E	N 212 E	-	-	-
E 1212 U	L 1212 U	LP 1212 U	U 1212 E	U 1212 L	E 1212 B	U 1212 B
E 5212 U	L 5212 U	LP 5212 U	U 5212 E	U 5212 L	E 5212 B	U 5212 B
E 6212 U	L 6212 U	LP 6212 U	U 6212 E	U 6212 L	E 6212 B	U 6212 B
NU 312 E	NJ 312 E	NUP 312 E	N 312 E	-	-	-
E 1312 U	L 1312 U	LP 1312 U	U 1312 E	U 1312 L	E 1312 B	U 1312 B
NU 2312 E	NJ 2312 E	NUP 2312 E	N 2312 E	-	-	-
E 5312 U	L 5312 U	LP 5312 U	U 5312 E	U 5312 L	E 5312 B	U 5312 B

ROLLWAY® *Radial Bearings*

Basic Construction Type: Cylindrical Roller Bearing

Rolling Elements: Crowned Cylindrical Rollers

Bearing Material: Through Hardened Bearing Grade Steel

Retainer Type: Stamped Steel, Segmented Steel, Two Piece Brass, One Piece Land Riding Brass

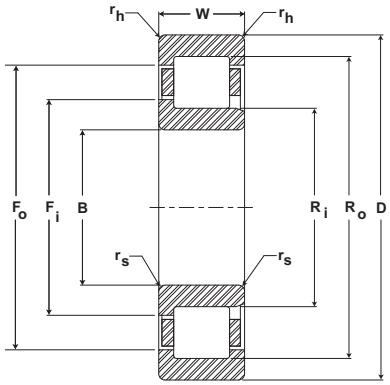

Cylindrical Roller Bearings

B	D	W	Rs	Rh	C	Co	Fi	Ri	Fo	Ro	Bearing Weight
Bore	Outside Diameter	Width	Corner*		Basic Dynamic Rating	Basic Static Rating	Flange O.D. Inner Race	O.D. Inner Race	Flange I.D. Outer Race	I.D. Outer Race	
mm inch	mm inch	mm inch	mm inch	mm inch	N/lb	N/lb	mm inch	mm inch	mm inch	mm inch	kg lb
65 2.5591	120 4.7244	23 .9055	1.5 .059	1.5 .059	110,790 24,730	124,186 27,720	84.6 3.331	78.5 3.090	102.5 4.035	108.5 4.272	1.2 2.6
			2.5 .098	1.5 .059	93,453 20,860	111,642 24,920	85.3 3.358	80.4 3.166	101.2 3.986	105.7 4.161	1.2 2.6
		38.1 1.5000	2.5 .098	1.5 .059	93,453 20,860	111,642 24,920	85.3 3.358	80.4 3.166	101.2 3.986	105.7 4.161	2.4 5.3
	140 5.5118	33 1.2992	2.0 .079	2.0 .079	184,710 41,230	198,195 44,240	90.7 3.571	82.5 3.248	116.1 4.571	124.5 4.902	2.5 5.5
			2.5 .098	2.0 .079	160,026 35,720	175,078 39,080	90.7 3.571	83.7 3.294	114.7 4.515	120.2 4.732	2.5 5.5
		48 1.8898	2.0 .079	2.0 .079	251,910 56,230	295,366 65,930	90.7 3.571	82.5 3.248	116.1 4.571	124.5 4.902	3.6 7.9
		58.7 2.3125	2.5 .098	2.0 .079	293,574 65,530	367,136 81,950	90.7 3.571	83.7 3.294	114.7 4.515	120.2 4.732	5.2 11.4
70 2.7559	125 4.9213	24 .9449	2.0 .079	2.0 .079	111,194 24,820	126,067 28,140	89.4 3.520	83.5 3.287	107.2 4.291	113.5 4.469	1.3 2.9
			2.5 .098	1.5 .059	105,011 23,440	127,142 28,380	89.7 3.531	84.8 3.339	107.2 4.213	111.5 4.390	1.3 2.9
		31 1.2205	1.5 .059	1.5 .059	111,194 24,820	126,067 28,140	89.4 3.520	83.5 3.287	107.2 4.213	113.5 4.469	1.5 3.3
		39.7 1.5625	2.5 .098	1.5 .059	172,211 38,440	240,128 53,600	89.7 3.531	84.8 3.339	106.7 4.201	111.5 4.390	2.2 4.8
		79.4 3.1250	2.5 .098	1.5 .059	295,232 65,900	480,211 107,190	89.7 3.531	84.8 3.339	106.7 4.201	111.5 4.390	4.4 9.7
	150 5.9055	35 1.3780	2.0 .079	2.0 .079	208,992 46,650	229,331 51,190	97.5 3.839	89.0 3.504	124.2 4.890	133.0 5.236	3.0 6.6
			3.2 .126	2.0 .079	193,760 43,250	219,699 49,040	97.3 3.831	89.2 3.511	122.2 4.811	129.3 5.091	3.0 6.6
		51 2.0079	2.0 .079	2.0 .079	278,522 62,170	331,699 74,040	97.5 3.839	89.0 3.504	124.2 4.890	133.0 5.236	4.9 10.8
		63.5 2.5000	3.2 .126	2.0 .079	316,064 70,550	412,160 92,000	97.3 3.831	89.2 3.511	122.2 4.811	129.3 5.091	5.9 13.0
75 2.9528	115 4.5276	20 0.7874	2.0 .079	1.0 .039	61,958 13,830	79,117 17,660	89.2 3.512	85.2 3.355	101.0 3.977	104.9 4.130	0.8 1.8
	130 5.1181	25 .9843	1.5 .059	1.5 .059	133,683 29,840	162,938 36,370	94.5 3.720	88.5 3.484	112.3 4.420	118.5 4.665	1.4 3.1
			2.5 .098	1.5 .059	104,608 23,350	127,949 28,560	94.4 3.717	89.0 3.504	111.0 4.369	115.7 4.555	1.4 3.1
		31 1.2250	1.5 .059	1.5 .059	165,536 36,950	214,458 47,870	94.5 3.720	88.5 3.484	112.3 4.421	118.5 4.665	1.8 4.0
		41.3 1.6250	2.5 .098	1.5 .059	179,334 40,030	255,898 57,120	94.4 3.717	88.9 3.500	111.0 4.270	115.7 4.555	2.7 5.9
	160 6.2992	37 1.4567	2.0 .079	2.0 .079	245,146 54,720	271,354 60,570	104.2 4.102	95.0 3.740	133.4 5.252	143.0 5.630	3.6 7.9
			3.2 .126	2.0 .079	192,685 43,010	211,635 47,240	104.5 4.114	95.9 3.776	131.4 5.172	139.1 5.476	3.6 7.9
		55 2.1654	2.0 .079	2.0 .079	245,146 54,720	271,354 60,570	104.2 4.102	95.0 3.740	133.4 5.252	143.0 5.630	5.5 12.1
		68.3 2.6875	3.2 .126	2.0 .079	369,914 82,570	489,485 109,260	104.5 4.114	95.9 3.776	131.4 5.180	139.1 5.476	7.3 16.1

Radial Roller bearings and manufactured to the ABMA RBEC-1 tolerance class. Bearing manufactured to either RBEC-3, RBEC-5 or special tolerance classes are also available upon request.
Unless otherwise specified all Rollway radial roller bearings are manufactured to ABMA's RBEC-1 precision class.
*rs and rh are the maximum shaft and housing fillet radius that can be cleared.
Metric dimensions for reference only.

Not all parts are available from stock. Please contact customer service for availability (800) 626-2120.
For more information on bearing capabilities outside of our standard offering, please contact Application Engineering (800) 626-2093.

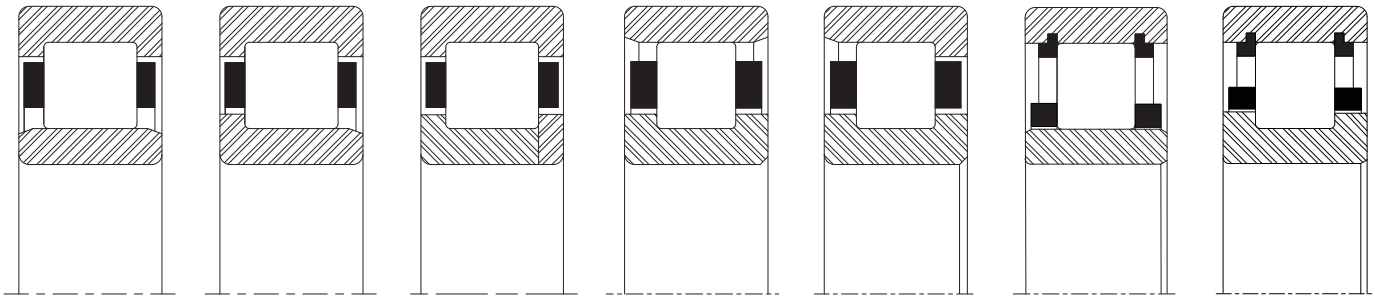

Cylindrical Roller Bearings

Inner Race Separable Both Directions	Inner Race Separable One Direction	Two Piece Inner Race Four-Flange Design	Outer Race Separable Both Directions	Outer Race Separable One Direction	Inner Race Separable Both Directions	Non-Separable
NU 213 E	NJ 213 E	NUP 213 E	N 213 E	-	-	-
E 1213 U	L 1213 U	LP 1213 U	U 1213 E	U 1213 L	E 1213 B	U 1213 B
E 5213 U	L 5213 U	LP 5213 U	U 5213 E	U 5213 L	E 5213 B	U 5213 B
NU 313 E	NJ 313 E	NUP 313 E	N 313 E	-	-	-
E 1313 U	L 1313 U	LP 1313 U	U 1313 E	U 1313 L	E 1313 B	U 1313 B
NU 2313 E	NJ 2313 E	NUP 2313 E	N 2313 E	-	-	-
E 5313 U	L 5313 U	LP 5313 U	U 5313 E	U 5313 L	E 5313 B	U 5313 B
NU 214 E	NJ 214 E	NUP 214 E	N 214 E	-	-	-
E 1214 U	L 1214 U	LP 1214 U	U 1214 E	U 1214 L	E 1214 B	U 1214 B
NU 2214 E	NJ 2214 E	NUP 2214 E	N 2214 E	-	-	-
E 5214 U	L 5214 U	LP 5214 U	U 5214 E	U 5214 L	E 5214 B	U 5214 B
E 6214 U	L 6214 U	LP 6214 U	U 6214 E	U 6214 L	E 6214 B	U 6214 B
NU 314 E	NJ 314 E	NUP 314 E	N 314 E	-	-	-
E 1314 U	L 1314 U	LP 1314 U	U 1314 E	U 1314 L	E 1314 B	U 1314 B
NU 2314 E	NJ 2314 E	NUP 2314 E	N 2314 E	-	-	-
E 5314 U	L 5314 U	LP 5314 U	U 5314 E	U 5314 L	E 5314 B	U 5314 B
E 1015 U	L 1015 U	LP 1015 U	U 1015 E	U 1015 L	E 1015 B	U 1015 B
NU 215 E	NJ 215 E	NUP 215 E	N 215 E	-	-	-
E 1215 U	L 1215 U	LP 1215 U	U 1215 E	U 1215 L	E 1215 B	U 1215 B
NU 2215 E	NJ 2215 E	NUP 2215 E	N 2215 E	-	-	-
E 5215 U	L 5215 U	LP 5215 U	U 5215 E	U 5215 L	E 5215 B	U 5215 B
NU 315 E	NJ 315 E	NUP 315 E	N 315 E	-	-	-
E 1315 U	L 1315 U	LP 1315 U	U 1315 E	U 1315 L	E 1315 B	U 1315 B
NU 2315 E	NJ 2315 E	NUP 2315 E	N 2315 E	-	-	-
E 5315 U	L 5315 U	LP 5315 U	U 5315 E	U 5315 L	E 5315 B	U 5315 B

ROLLWAY® *Radial Bearings*

Basic Construction Type: Cylindrical Roller Bearing

Rolling Elements: Crowned Cylindrical Rollers

Bearing Material: Through Hardened Bearing Grade Steel

Retainer Type: Stamped Steel, Segmented Steel, Two Piece Brass, One Piece Land Riding Brass

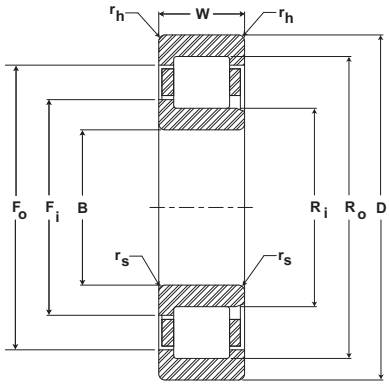

Cylindrical Roller Bearings

B	D	W	Rs	Rh	C	Co	Fi	Ri	Fo	Ro	Bearing Weight
Bore	Outside Diameter	Width	Corner*		Basic Dynamic Rating	Basic Static Rating	Flange O.D. Inner Race	O.D. Inner Race	Flange I.D. Outer Race	I.D. Outer Race	
mm inch	mm inch	mm inch	mm inch	mm inch	N/lb	N/lb	mm inch	mm inch	mm inch	mm inch	kg lb
80 3.1496	140 5.5118	26 1.0236	2.0 .079	2.0 .079	143,136 31,950	174,048 38,850	101.7 4.004	95.3 3.752	121.4 4.780	127.3 5.012	1.7 3.7
			2.5 .098	2.0 .079	114,150 25,480	137,402 30,670	101.7 4.004	95.3 3.752	119.4 4.700	124.6 4.906	1.7 3.7
		33 1.2992	2.0 .079	2.0 .079	190,355 42,490	251,104 56,050	101.7 4.004	95.3 3.752	121.4 4.842	127.3 5.012	2.3 5.1
		44.5 1.7500	2.5 .098	2.0 .079	202,899 45,290	287,750 64,230	101.1 3.980	95.3 3.752	119.4 4.700	124.6 4.906	3.2 7.0
		88.9 3.5000	2.5 .098	2.0 .079	202,899 45,290	287,750 64,230	101.1 3.980	95.3 3.752	119.4 4.701	124.6 4.906	0.6 1.3
	170 6.6929	39 1.5354	2.0 .079	2.0 .079	264,410 59,020	295,456 65,950	110.6 4.354	101.0 3.976	141.0 5.551	151.0 5.945	4.3 9.5
			3.2 .126	2.0 .079	231,123 51,590	262,214 58,530	110.7 4.358	101.6 4.001	139.2 5.480	147.3 5.799	4.4 9.7
		58 2.2835	2.1 .083	2.1 .083	364,672 81,400	446,656 99,700	110.6 4.354	101.0 3.976	141.0 5.551	151.0 5.945	6.7 14.7
		68.3 2.6875	3.2 .126	2.0 .079	404,096 90,200	537,779 120,040	110.7 4.358	101.6 4.001	139.2 5.480	147.3 5.799	8.2 18.0
85 3.3465	130 5.1181	22 .8661	2.0 .079	1.5 .059	90,138 20,120	122,259 27,290	100.8 3.969	96.3 3.792	113.9 4.501	118.7 4.673	1.1 2.4
	150 5.9055	28 1.1024	1.5 .059	2.0 .079	169,926 37,930	203,974 45,530	107.6 4.236	100.5 3.957	129.3 5.091	136.5 5.374	2.1 4.6
			3.2 .126	2.0 .079	139,059 31,040	169,971 37,940	108.5 4.272	102.0 4.016	128.4 5.056	134.1 5.280	2.1 4.6
		36 1.4173	2.0 .079	2.0 .079	220,506 49,220	285,107 63,640	107.6 4.236	100.5 3.957	129.3 5.091	136.5 5.374	2.9 6.4
		49.2 1.9375	3.2 .126	2.0 .079	250,701 55,960	362,611 80,940	108.5 4.272	102.0 4.016	128.4 5.056	134.1 5.280	4.0 8.8
	180 7.0866	41 1.6142	2.5 .098	2.5 .098	284,346 63,470	321,126 71,680	118.0 4.646	108.0 4.252	149.6 5.890	160.0 6.299	5.1 11.2
			4.0 .157	2.5 .098	234,573 52,360	260,019 58,040	118.2 4.654	108.5 4.272	148.6 5.850	157.3 6.193	5.0 11.0
		60 2.3622	2.5 .098	2.5 .098	380,531 84,940	467,085 104,260	118.0 4.646	108.0 4.252	149.6 5.890	160.0 6.299	6.8 15.0
		73 2.8750	4.0 .157	2.5 .098	450,016 100,450	600,813 134,110	118.2 4.654	108.5 4.272	148.6 5.850	157.3 6.193	9.5 20.9
90 3.5433	160 6.2992	30 1.1811	2.0 .079	2.0 .079	187,936 41,950	227,808 50,850	114.5 4.508	107.0 4.213	137.4 5.409	145.0 5.709	2.6 5.7
			3.2 .126	2.0 .079	163,072 36,400	200,570 44,770	114.2 4.496	107.2 4.220	135.9 5.350	142.1 5.594	2.7 5.9
		40 1.5748	2.0 .079	2.0 .079	248,237 55,410	325,830 72,730	114.2 4.496	107.0 4.213	137.4 5.409	145.0 5.709	3.4 7.5
		52.4 2.0625	2.0 .079	2.0 .079	290,304 64,800	421,075 93,990	114.2 4.496	107.2 4.220	135.9 5.350	142.1 5.594	5.0 11.0
	190 7.4803	43 1.6929	2.5 .098	2.5 .098	322,112 71,900	364,941 81,460	124.2 4.890	113.5 4.469	158.3 6.232	169.5 6.673	5.9 13.0
			4.0 .157	2.5 .098	295,366 65,930	344,064 76,800	123.4 4.858	114.0 4.488	156.2 6.150	165.3 6.508	5.9 13.0
		64 2.5197	2.5 .098	2.5 .098	441,594 98,570	547,501 122,210	124.2 4.890	113.5 4.469	158.3 6.232	169.5 6.673	8.7 19.1
		73 2.8750	2.5 .098	2.5 .098	490,202 109,420	659,859 147,290	123.4 4.858	114.0 4.488	156.2 4.213	165.3 6.508	10.0 22.0

Radial Roller bearings and manufactured to the ABMA RBEC-1 tolerance class. Bearing manufactured to either RBEC-3, RBEC-5 or special tolerance classes are also available upon request.
Unless otherwise specified all Rollway radial roller bearings are manufactured to ABMA's RBEC-1 precision class.
*rs and rh are the maximum shaft and housing fillet radius that can be cleared.
Metric dimensions for reference only.

Not all parts are available from stock. Please contact customer service for availability (800) 626-2120.
For more information on bearing capabilities outside of our standard offering, please contact Application Engineering (800) 626-2093.

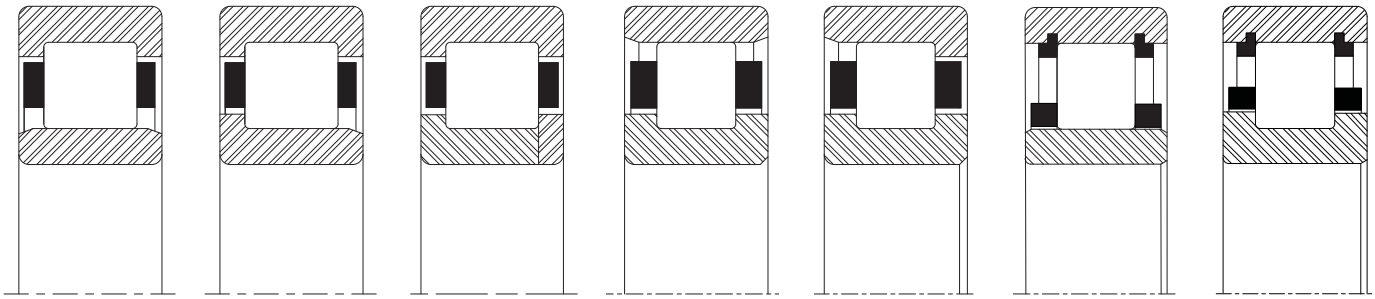

Cylindrical Roller Bearings

Inner Race Separable Both Directions	Inner Race Separable One Direction	Two Piece Inner Race Four-Flange Design	Outer Race Separable Both Directions	Outer Race Separable One Direction	Inner Race Separable Both Directions	Non-Separable
NU 216 E	NJ 216 E	NUP 216 E	N 216 E	-	-	-
E 1216 U	L 1216 U	LP 1216 U	U 1216 E	U 1216 L	E 1216 B	U 1216 B
NU 2216 E	NJ 2216 E	NUP 2216 E	N 2216 E	-	-	-
E 5216 U	L 5216 U	LP 5216 U	U 5216 E	U 5216 L	E 5216 B	U 5216 B
E 6216 U	L 6216 U	LP 6216 U	U 6216 E	U 6216 L	E 6216 B	U 6216 B
NU 316 E	NJ 316 E	NUP 316 E	N 316 E	-	-	-
E 1316 U	L 1316 U	LP 1316 U	U 1316 E	U 1316 L	E 1316 B	U 1316 B
NU 2316 E	NJ 2316 E	NUP 2316 E	N 2316 E	-	-	-
E 5316 U	L 5316 U	LP 5316 U	U 5316 E	U 5316 L	E 5316 B	U 5316 B
E 1017 U	L 1017 U	LP 1017 U	U 1017 E	U 1017 L	E 1017 B	U 1017 B
NU 217 E	NJ 217 E	NUP 217 E	N 217 E	-	-	-
E 1217 U	L 1217 U	LP 1217 U	U 1217 E	U 1217 L	E 1217 B	U 1217 B
NU 2217 E	NJ 2217 E	NUP 2217 E	N 2217 E	-	-	-
E 5217 U	L 5217 U	LP 5217 U	U 5217 E	U 5217 L	E 5217 B	U 5217 B
NU 317 E	NJ 317 E	NUP 317 E	N 317 E	-	-	-
E 1317 U	L 1317 U	LP 1317 U	U 1317 E	U 1317 L	E 1317 B	U 1317 B
NU 2317 E	NJ 2317 E	NUP 2317 E	N 2317 E	-	-	-
E 5317 U	L 5317 U	LP 5317 U	U 5317 E	U 5317 L	E 5317 B	U 5317 B
NU 218 E	NJ 218 E	NUP 218 E	N 218 E	-	-	-
E 1218 U	L 1218 U	LP 1218 U	U 1218 E	U 1218 L	E 1218 B	U 1218 B
NU 2218 E	NJ 2218 E	NUP 2218 E	N 2218 E	-	-	-
E 5218 U	L 5218 U	LP 5218 U	U 5218 E	U 5218 L	E 5218 B	U 5218 B
NU 318 E	NJ 318 E	NUP 318 E	N 318 E	-	-	-
E 1318 U	L 1318 U	LP 1318 U	U 1318 E	U 1318 L	E 1318 B	U 1318 B
NU 2318 E	NJ 2318 E	NUP 2318 E	N 2318 E	-	-	-
E 5318 U	L 5318 U	LP 5318 U	U 5318 E	U 5318 L	E 5318 B	U 5318 B

ROLLWAY® *Radial Bearings*

Basic Construction Type: Cylindrical Roller Bearing

Rolling Elements: Crowned Cylindrical Rollers

Bearing Material: Through Hardened Bearing Grade Steel

Retainer Type: Stamped Steel, Segmented Steel, Two Piece Brass, One Piece Land Riding Brass

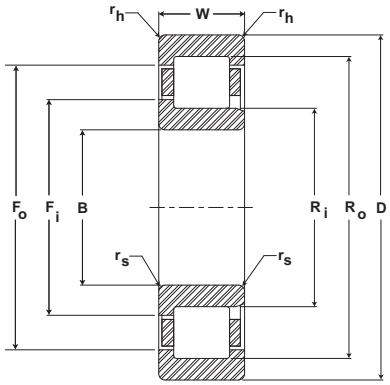

Cylindrical Roller Bearings

B	D	W	Rs	Rh	C	Co	Fi	Ri	Fo	Ro	Bearing Weight
Bore	Outside Diameter	Width	Corner*		Basic Dynamic Rating	Basic Static Rating	Flange O.D. Inner Race	O.D. Inner Race	Flange I.D. Outer Race	I.D. Outer Race	
mm inch	mm inch	mm inch	mm inch	mm inch	N/lb	N/lb	mm inch	mm inch	mm inch	mm inch	kg lb
95 3.7402	170 6.6929	32 1.2598	2.0 .079	2.0 .079	215,309 48,060	257,914 57,570	120.7 4.752	112.5 4.429	146.1 5.752	154.5 6.083	3.1 6.8
			3.2 .126	2.0 .079	191,744 42,800	238,918 53,330	121.0 4.764	113.5 4.469	144.5 5.689	151.2 5.953	3.2 7.0
		43 1.6929	2.0 .079	2.0 .079	278,522 62,170	359,072 80,150	120.7 4.752	112.5 4.429	146.1 5.752	154.5 6.083	4.2 9.2
		55.6 2.1875	3.2 .126	2.0 .079	334,880 74,750	489,350 109,230	121.0 4.764	113.5 4.469	144.5 5.689	151.2 5.953	6.4 14.1
		111.1 4.3750	3.2 .126	2.0 .079	574,157 128,160	978,701 218,460	121.0 4.764	113.5 4.469	144.5 5.689	151.2 5.953	10.9 24.0
	200 7.8740	45 1.7717	3.0 .118	2.5 .098	340,883 76,090	398,182 88,880	132.2 5.205	121.5 4.783	166.3 6.547	177.5 6.988	6.9 15.2
			4.0 .157	2.5 .098	279,194 62,320	323,456 72,200	132.5 5.217	122.1 4.807	164.3 6.468	173.4 6.827	6.8 15.0
		67 2.6378	3.0 .118	2.5 .098	467,264 104,300	597,363 133,340	132.2 5.205	121.5 4.783	166.3 6.547	177.5 6.988	11.2 24.6
		77.8 3.0625	4.0 .157	2.5 .098	463,322 103,420	620,301 138,460	132.5 5.217	122.1 4.807	164.3 6.469	173.4 6.827	13.6 29.9
100 3.9370	180 7.0866	34 1.3386	2.0 .079	2.0 .079	243,309 54,310	297,114 66,320	127.5 5.020	119.0 4.685	154.2 6.070	163.0 6.417	4.9 10.8
			4.0 .157	2.0 .079	209,754 46,820	261,722 58,420	129.0 5.079	121.0 4.764	154.2 6.070	161.1 6.343	3.8 8.4
		46 1.8110	2.0 .079	2.0 .079	324,218 72,370	429,766 95,930	127.5 5.020	119.0 4.685	154.2 6.070	163.0 6.417	5.5 12.1
		60.3 2.3750	4.0 .157	2.0 .079	377,306 84,220	556,774 124,280	129.0 5.079	121.0 4.764	154.2 6.070	161.1 6.343	7.3 16.1
		120.7 4.7500	4.0 .157	2.0 .079	646,912 144,400	1,113,594 248,570	129.0 5.079	121.0 4.764	154.2 6.070	161.1 6.343	10.9 24.0
	215 8.4646	47 1.8504	2.5 .098	2.5 .098	392,090 87,520	445,312 99,400	139.6 5.496	127.5 5.020	178.7 7.035	191.5 7.539	8.4 18.5
			4.7 .185	2.5 .098	305,626 68,220	354,637 79,160	141.1 5.555	130.2 5.126	175.1 6.894	184.8 7.276	8.6 18.9
		73 2.8740	2.5 .098	2.5 .098	583,430 130,230	742,246 165,680	139.6 5.496	127.5 5.020	178.7 7.035	191.5 7.539	13.1 28.8
		82.6 3.2500	4.7 .185	2.5 .098	551,533 123,110	757,568 169,100	141.1 5.555	130.2 5.126	175.1 6.892	184.8 7.276	15.0 33.0
105 4.1339	160 6.2992	26 1.0236	2.5 .098	2.0 .079	132,742 29,630	189,504 42,300	124.5 4.902	119.2 4.693	140.6 5.535	145.8 5.740	1.9 4.2
	190 7.4803	36 1.4173	4.0 .157	2.0 .079	236,275 52,740	300,474 67,070	134.9 5.311	126.5 4.980	161.0 6.339	168.5 6.634	4.5 9.9
		65.1 2.5625	4.0 .157	2.0 .079	442,221 98,710	672,672 150,150	134.9 5.311	126.5 4.980	161.0 6.339	168.5 6.634	9.1 20.0
	225 8.8583	49 1.9291	4.7 .185	3.0 .118	439,757 98,160	502,790 112,230	146.6 5.772	132.9 5.232	187.4 7.378	200.9 7.909	9.5 20.9
			4.7 .185	2.5 .098	362,253 80,860	433,754 96,820	147.2 5.795	136.2 5.362	183.2 7.213	193.4 7.614	9.5 20.9
		87.3 3.4375	4.7 .185	2.5 .098	586,880 131,000	806,579 180,040	147.2 5.795	136.2 5.362	183.2 7.213	193.4 7.614	16.8 37.0

Radial Roller bearings and manufactured to the ABMA RBEC-1 tolerance class. Bearing manufactured to either RBEC-3, RBEC-5 or special tolerance classes are also available upon request.
Unless otherwise specified all Rollway radial roller bearings are manufactured to ABMA's RBEC-1 precision class.
*rs and rh are the maximum shaft and housing fillet radius that can be cleared.
Metric dimensions for reference only.

Not all parts are available from stock. Please contact customer service for availability (800) 626-2120.
For more information on bearing capabilities outside of our standard offering, please contact Application Engineering (800) 626-2093.

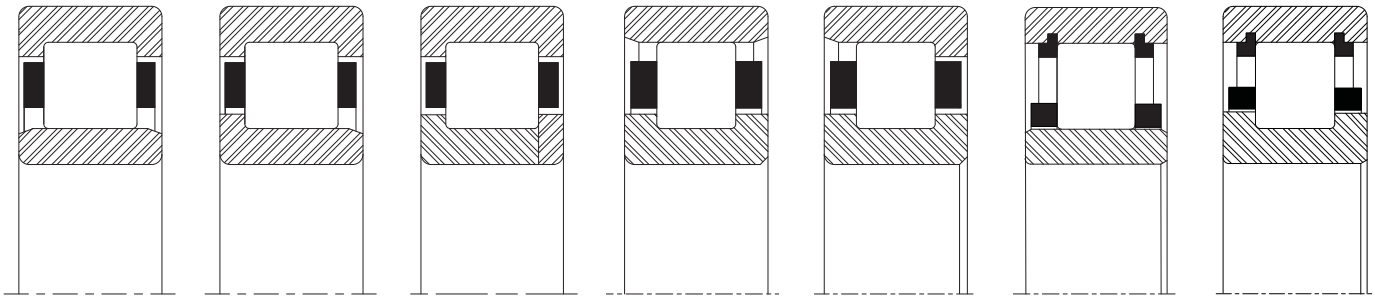

Cylindrical Roller Bearings

Inner Race Separable Both Directions	Inner Race Separable One Direction	Two Piece Inner Race Four-Flange Design	Outer Race Separable Both Directions	Outer Race Separable One Direction	Inner Race Separable Both Directions	Non-Separable
NU 219 E	NJ 219 E	NUP 219 E	N 219 E	-	-	-
E 1219 U	L 1219 U	LP 1219 U	U 1219 E	U 1219 L	E 1219 B	U 1219 B
NU 2219 E	NJ 2219 E	NUP 2219 E	N 2219 E	-	-	-
E 5219 U	L 5219 U	LP 5219 U	U 5219 E	U 5219 L	E 5219 B	U 5219 B
E 6219 U	L 6219 U	LP 6219 U	U 6219 E	U 6219 L	E 6219 B	U 6219 B
NU 319 E	NJ 319 E	NUP 319 E	N 319 E	-	-	-
E 1319 U	L 1319 U	LP 1319 U	U 1319 E	U 1319 L	E 1319 B	U 1319 B
NU 2319 E	NJ 2319 E	NUP 2319 E	N 2319 E	-	-	-
E 5319 U	L 5319 U	LP 5319 U	U 5319 E	U 5319 L	E 5319 B	U 5319 B
NU 220 E	NJ 220 E	NUP 220 E	N 220 E	-	-	-
E 1220 U	L 1220 U	LP 1220 U	U 1220 E	U 1220 L	E 1220 B	U 1220 B
NU 2220 E	NJ 2220 E	NUP 2220 E	N 2220 E	-	-	-
E 5220 U	L 5220 U	LP 5220 U	U 5220 E	U 5220 L	E 5220 B	U 5220 B
E 6220 U	L 6220 U	LP 6220 U	U 6220 E	U 6220 L	E 6220 B	U 6220 B
NU 320 E	NJ 320 E	NUP 320 E	N 320 E	-	-	-
E 1320 U	L 1320 U	LP 1320 U	U 1320 E	U 1320 L	E 1320 B	U 1320 B
NU 2320 E	NJ 2320 E	NUP 2320 E	N 2320 E	-	-	-
E 5320 U	L 5320 U	LP 5320 U	U 5320 E	U 5320 L	E 5320 B	U 5320 B
E 1021 U	L 1021 U	LP 1021 U	U 1021 E	U 1021 L	E 1021 B	U 1021 B
E 1221 U	L 1221 U	LP 1221 U	U 1221 E	U 1221 L	E 1221 B	U 1221 B
E 5221 U	L 5221 U	LP 5221 U	U 5221 E	U 5221 L	E 5221 B	U 5221 B
NU 321 E	NJ 321 E	NUP 321 E	N 321 E	-	-	-
E 1321 U	L 1321 U	LP 1321 U	U 1321 E	U 1321 L	E 1321 B	E 1321 B
E 5321 U	L 5321 U	LP 5321 U	U 5321 E	U 5321 L	E 5321 B	E 5321 B

ROLLWAY® *Radial Bearings*

Basic Construction Type: Cylindrical Roller Bearing

Rolling Elements: Crowned Cylindrical Rollers

Bearing Material: Through Hardened Bearing Grade Steel

Retainer Type: Stamped Steel, Segmented Steel, Two Piece Brass, One Piece Land Riding Brass

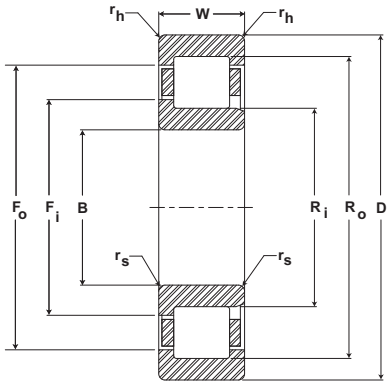

Cylindrical Roller Bearings

B	D	W	Rs	Rh	C	Co	Fi	Ri	Fo	Ro	Bearing Weight
Bore	Outside Diameter	Width	Corner*		Basic Dynamic Rating	Basic Static Rating	Flange O.D. Inner Race	O.D. Inner Race	Flange I.D. Outer Race	I.D. Outer Race	
mm inch	mm inch	mm inch	mm inch	mm inch	N/lb	N/lb	mm inch	mm inch	mm inch	mm inch	kg lb
110 4.3307	170 6.6929	28 1.1024	2.5 .098	2.0 .079	160,115 35,740	230,586 51,470	130.8 5.150	125.3 4.933	149.0 5.866	154.7 6.091	2.3 5.1
	200 7.8740	38 1.4961	2.0 .079	2.0 .079	298,547 66,640	376,320 84,000	141.7 5.579	132.5 5.217	170.9 6.728	180.5 7.106	5.1 11.2
			4.0 .157	2.0 .079	242,816 54,200	308,851 68,940	141.6 5.575	132.9 5.232	168.4 6.630	176.1 6.933	5.5 12.1
		53 2.0866	2.0 .079	2.0 .079	389,984 87,050	530,566 118,430	141.7 5.579	132.5 5.217	170.9 6.728	180.5 7.106	7.0 15.4
		69.9 2.7500	4.0 .157	2.0 .079	440,966 98,430	665,011 148,440	141.6 5.575	132.9 5.232	168.4 6.636	176.1 6.933	10.5 23.1
	240 9.4488	50 1.9685	2.5 .098	2.5 .098	440,563 98,340	510,138 113,870	155.8 6.134	143.0 5.630	197.4 7.772	211.0 8.307	11.2 24.6
			4.7 .185	2.5 .098	410,502 91,630	499,565 111,510	157.5 6.201	145.3 5.720	195.4 7.693	206.3 8.122	11.4 25.1
		80 3.1496	2.5 .098	2.5 .098	652,333 145,610	844,973 188,610	155.8 6.134	143.0 5.630	197.4 7.772	211.0 8.307	17.9 39.4
		92.1 3.6250	4.7 .185	2.5 .098	765,274 170,820	1,112,698 248,370	157.5 6.201	145.3 5.720	195.4 7.692	206.3 8.122	23.2 51.0
115 4.5275	250 9.8425	53 2.0866	4.7 .185	2.5 .098	435,635 97,240	515,782 115,130	162.3 6.390	149.6 5.890	202.7 7.980	215.5 8.484	9.3 20.5
			4.7 .185	2.5 .098	435,635 97,240	515,782 115,130	162.3 6.390	149.6 5.890	202.7 7.980	215.5 8.484	12.7 27.9
120 4.7244	180 7.0866	28 1.1024	3.2 .126	2.0 .079	153,798 34,330	223,059 49,790	141.2 5.559	135.2 5.323	158.9 6.256	164.5 6.476	2.5 5.5
		46 1.8110	3.2 .126	2.0 .079	241,875 53,990	399,347 89,140	141.2 5.559	135.3 5.328	158.9 6.256	164.5 6.476	4.2 9.2
	215 8.4646	40 1.5748	2.0 .079	2.0 .079	345,901 77,210	441,101 98,460	153.4 6.039	143.5 5.650	185.1 7.287	195.5 7.697	6.4 14.1
			4.7 .185	2.0 .079	286,227 63,890	376,634 84,070	154.3 6.075	145.1 5.713	182.7 7.193	190.9 7.516	6.4 14.1
		58 2.2835	2.0 .079	2.0 .079	481,555 107,490	674,957 150,660	153.4 6.039	143.5 5.650	185.1 7.287	195.5 7.697	18.6 40.9
		76.2 3.0000	4.7 .185	2.0 .079	557,357 124,410	887,309 198,060	154.3 6.075	145.1 5.713	182.7 7.194	190.9 7.516	11.8 26.0
	260 10.2362	55 2.1654	2.5 .098	2.5 .098	539,258 120,370	630,067 140,640	168.7 6.642	154.0 6.063	214.8 8.457	230.0 9.055	14.4 31.7
			6.4 .252	2.5 .098	435,277 97,160	520,262 116,130	170.2 6.701	157.0 6.181	211.2 8.315	223.0 8.780	14.5 31.9
		86 3.3858	2.5 .098	2.5 .098	804,966 179,680	1,054,637 235,410	168.7 6.642	154.0 6.063	214.8 8.457	230.0 9.055	22.3 49.1
		104.8 4.1250	6.4 .252	2.5 .098	852,858 190,370	1,235,315 275,740	170.2 6.701	157.0 6.181	211.2 8.256	223.0 8.780	29.3 64.5

Radial Roller bearings and manufactured to the ABMA RBEC-1 tolerance class. Bearing manufactured to either RBEC-3, RBEC-5 or special tolerance classes are also available upon request.
Unless otherwise specified all Rollway radial roller bearings are manufactured to ABMA's RBEC-1 precision class.
*rs and rh are the maximum shaft and housing fillet radius that can be cleared.
Metric dimensions for reference only.

Not all parts are available from stock. Please contact customer service for availability (800) 626-2120.
For more information on bearing capabilities outside of our standard offering, please contact Application Engineering (800) 626-2093.

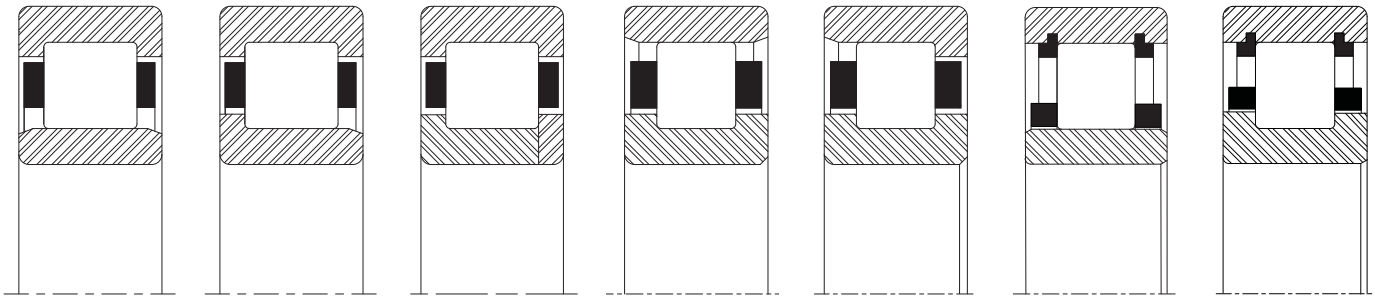

Cylindrical Roller Bearings

Inner Race Separable Both Directions	Inner Race Separable One Direction	Two Piece Inner Race Four-Flange Design	Outer Race Separable Both Directions	Outer Race Separable One Direction	Inner Race Separable Both Directions	Non-Separable
E 1022 U	L 1022 U	LP 1022 U	U 1022 E	U 1022 L	E 1022 B	U 1022 B
NU 222 E	NJ 222 E	NUP 222 E	N 222 E	-	-	-
E 1222 U	L 1222 U	LP 1222 U	U 1222 E	U 1222 L	E 1222 B	E 1222 B
NU 2222 E	NJ 2222 E	NUP 2222 E	N 2222 E	-	-	-
E 5222 U	L 5222 U	LP 5222 U	U 5222 E	U 5222 L	E 5222 B	E 5222 B
NU 322 E	NJ 322 E	NUP 322 E	N 322 E	-	-	-
E 1322 U	L 1322 U	LP 1322 U	U 1322 E	U 1322 L	E 1322 B	E 1322 B
NU 2322 E	NJ 2322 E	NUP 2322 E	N 2322 E	-	-	-
E 5322 U	L 5322 U	LP 5322 U	U 5322 E	U 5322 L	E 5322 B	E 5322 B
NU 323	NJ 323	NUP 323	N 323	-	-	-
E 1323 U	L 1323 U	LP 1323 U	U 1323 E	U 1323 L	E 1323 B	E 1323 B
E 1024 U	L 1024 U	LP 1024 U	U 1024 E	U 1024 L	E 1024 B	U 1014 B
E 5024 U	L 5024 U	LP 5024 U	U 5024 E	U 5024 L	E 5024 B	E 5024 B
NU 224 E	NJ 224 E	NUP 224 E	N 224 E	-	-	-
E 1224 U	L 1224 U	LP 1224 U	U 1224 E	U 1224 L	E 1224 B	E 1224 B
NU 2224 E	NJ 2224 E	NUP 2224 E	N 2224 E	-	-	-
E 5224 U	L 5224 U	LP 5224 U	U 5224 E	U 5224 L	E 5224 B	E 5224 B
NU 324 E	NJ 324 E	NUP 324 E	N 324 E	-	-	-
E 1324 U	L 1324 U	LP 1324 U	U 1324 E	U 1324 L	E 1324 B	E 1324 B
NU 2324 E	NJ 2324 E	NUP 2324 E	N 2324 E	-	-	-
E 5324 U	L 5324 U	LP 5324 U	U 5324 E	U 5324 L	E 5324 B	E 5324 B

ROLLWAY® *Radial Bearings*

Basic Construction Type: Cylindrical Roller Bearing

Rolling Elements: Crowned Cylindrical Rollers

Bearing Material: Through Hardened Bearing Grade Steel

Retainer Type: Stamped Steel, Segmented Steel, Two Piece Brass, One Piece Land Riding Brass

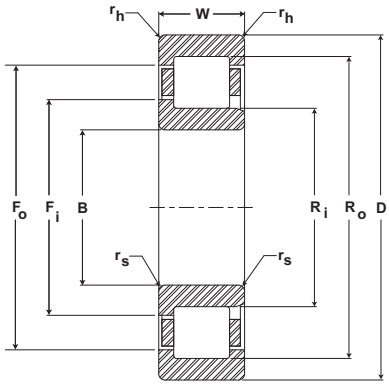

Cylindrical Roller Bearings

B	D	W	Rs	Rh	C	Co	Fi	Ri	Fo	Ro	Bearing Weight
Bore	Outside Diameter	Width	Corner*		Basic Dynamic Rating	Basic Static Rating	Flange O.D. Inner Race	O.D. Inner Race	Flange I.D. Outer Race	I.D. Outer Race	
mm inch	mm inch	mm inch	mm inch	mm inch	N/lb	N/lb	mm inch	mm inch	mm inch	mm inch	kg lb
130 5.1181	200 7.8740	33 1.2992	3.2 .126	2.0 .079	204,960 45,750	295,098 65,870	154.2 6.071	147.6 5.811	175.5 6.909	182.5 7.185	3.9 8.6
		52 2.0472	3.2 .126	2.0 .079	348,454 77,780	583,789 130,310	154.2 6.071	147.6 5.811	175.5 6.909	182.5 7.185	5.9 13.0
	230 9.0551	40 1.5748	4.7 .185	2.5 .098	307,104 68,550	402,125 89,760	164.7 6.484	155.0 6.102	195.2 7.685	203.8 8.024	7.3 16.1
		79 3.1250	4.7 .185	2.5 .098	659,635 147,240	1,074,662 239,880	164.7 6.484	155.0 6.102	195.2 7.685	203.8 8.024	11.4 25.1
	280 11.0236	58 2.2835	4.0 .157	3.2 .126	594,854 132,780	704,525 157,260	183.0 7.205	167.0 6.575	231.0 9.094	247.0 9.724	17.6 38.7
			6.4 .252	3.2 .126	500,730 111,770	601,216 134,200	184.9 7.280	170.5 6.713	229.8 9.047	242.7 9.555	17.7 38.9
		93 3.6615	4.0 .157	3.2 .126	884,218 197,370	1,172,819 261,790	183.0 7.205	167.0 6.575	231.0 9.094	247.0 9.724	29.2 64.2
		111.1 4.3750	6.4 .252	3.2 .126	996,800 222,500	1,456,896 325,200	184.9 7.280	170.5 6.713	229.8 9.047	242.7 9.555	35.5 78.1
140 5.5118	210 8.2677	33 1.2992	4.0 .157	2.0 .079	196,941 43,960	284,704 63,550	164.3 6.469	157.6 6.205	185.6 7.307	192.4 7.575	4.1 9.0
		53 2.0866	4.0 .157	2.0 .079	334,835 74,740	563,226 125,720	164.3 6.469	157.6 6.205	185.6 7.307	192.4 7.575	9.5 20.9
	220 8.6614	36 1.4173	2.0 .079	2.0 .079	199,046 44,430	274,310 61,230	169.4 6.669	161.9 6.374	192.9 7.594	200.0 7.874	7.7 16.9
		63.5 2.5000	2.0 .079	2.0 .079	412,339 92,040	699,552 156,150	169.4 6.669	161.9 6.374	192.0 7.560	200.0 7.874	10.0 22.0
	250 9.8425	42 1.6535	4.7 .185	2.5 .098	344,646 76,930	451,898 100,870	179.1 7.051	168.5 6.634	211.8 8.339	221.5 8.720	9.1 20.0
		82.6 3.2500	4.7 .185	2.5 .098	674,419 150,540	1,069,152 238,650	179.1 7.051	168.5 6.634	211.8 8.339	221.5 8.720	19.1 42.0
	300 11.8110	62 2.4409	4.0 .157	4.0 .157	629,082 140,420	769,485 171,760	196.0 7.717	180.0 7.087	247.2 9.732	260.0 10.236	21.6 47.5
			7.9 .311	3.2 .126	558,880 124,750	678,630 151,480	197.0 7.756	181.7 7.154	244.3 9.618	258.0 10.157	21.8 48.0
		102 4.0157	4.0 .157	4.0 .157	935,110 208,730	1,280,922 285,920	196.0 7.717	180.0 7.087	247.2 9.732	260.0 10.236	39.7 87.3
		114.3 4.5000	7.9 .311	3.2 .126	1,140,205 254,510	1,701,907 379,890	197.0 7.756	181.7 7.154	244.3 9.618	258.0 10.157	42.7 93.9
150 5.9055	225 8.8583	56 2.2047	4.0 .157	2.0 .079	390,387 87,140	667,206 148,930	176.2 6.937	168.7 6.642	198.9 7.831	206.3 8.122	7.7 16.9
	235 9.2520	38 1.4961	2.0 .079	2.0 .079	203,840 45,500	288,960 64,500	182.4 7.181	174.6 6.875	205.6 8.095	212.7 8.374	7.0 15.4
		66.7 2.6250	2.0 .079	2.0 .079	434,650 97,020	765,005 170,760	182.4 7.181	174.6 6.875	205.6 8.095	212.7 8.374	12.3 27.1
	270 10.6299	45 1.7717	2.5 .098	2.5 .098	407,814 91,030	523,936 116,950	191.6 7.543	179.4 7.063	228.5 8.996	239.7 9.437	12.3 27.1
			6.4 .252	2.5 .098	402,842 89,920	519,053 115,860	193.0 7.598	181.6 7.150	231.1 9.100	241.7 9.516	11.8 26.0
		88.9 3.5000	6.4 .252	2.5 .098	878,797 196,160	1,414,829 315,810	193.0 7.598	181.6 7.150	231.1 9.100	241.7 9.516	24.1 53.0
		177.8 7.0000	6.4 .252	2.5 .098	1,506,669 336,310	2,829,658 631,620	193.0 7.598	181.6 7.150	231.1 9.100	241.7 9.516	44.5 97.9
	320 12.5984	65 2.5591	3.0 .118	3.0 .118	791,034 176,570	976,147 217,890	192.8 7.591	190.0 7.480	264.4 10.410	280.0 11.024	27.3 60.1
		123.8 4.8750	7.9 .311	3.2 .126	1,355,110 302,480	1,969,542 439,630	208.5 8.209	190.9 7.516	263.3 10.366	279.1 10.988	52.7 115.9

Radial Roller bearings and manufactured to the ABMA RBEC-1 tolerance class. Bearing manufactured to either RBEC-3, RBEC-5 or special tolerance classes are also available upon request.

Unless otherwise specified all Rollway radial roller bearings are manufactured to ABMA's RBEC-1 precision class.

*rs and rh are the maximum shaft and housing fillet radius that can be cleared.

Metric dimensions for reference only.

Not all parts are available from stock. Please contact customer service for availability (800) 626-2120.

For more information on bearing capabilities outside of our standard offering, please contact Application Engineering (800) 626-2093.

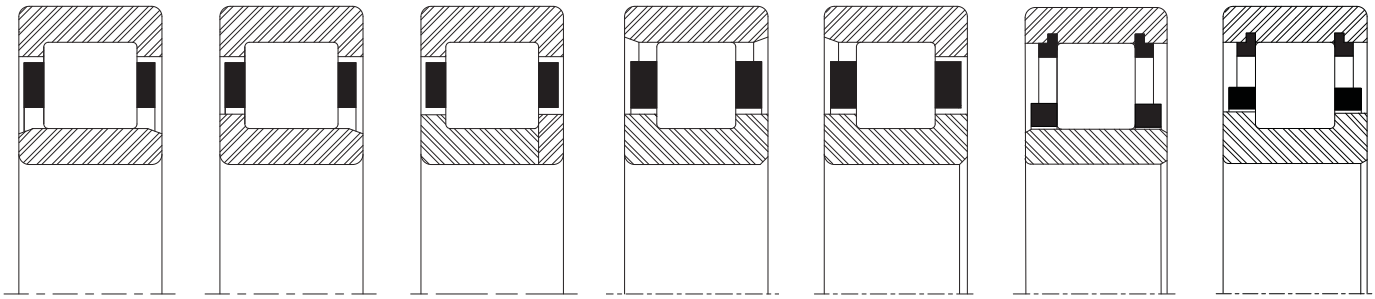

Cylindrical Roller Bearings

Inner Race Separable Both Directions	Inner Race Separable One Direction	Two Piece Inner Race Four-Flange Design	Outer Race Separable Both Directions	Outer Race Separable One Direction	Inner Race Separable Both Directions	Non-Separable
E 1026 U	L 1026 U	LP 1026 U	U 1026 E	U 1026 L	E 1026 B	U 1026 B
E 5026 U	L 5026 U	LP 5026 U	U 5026 E	U 5026 L	E 5026 B	U 5026 B
E 1226 U	L 1226 U	LP 1226 U	U 1226 E	U 1226 L	E 1226 B	E 1226 B
E 5226 U	L 5226 U	LP 5226 U	U 5226 E	U 5226 L	E 5226 B	E 5226 B
NU 326 E	NJ 326 E	NUP 326 E	N 326 E	-	-	-
E 1326 U	L 1326 U	LP 1326 U	U 1326 E	U 1326 L	E 1326 B	U 1326 B
NU 2326 E	NJ 2326 E	NUP 2326 E	N 2326 E	-	-	-
E 5326 U	L 5326 U	LP 5326 U	U 5326 E	U 5326 L	E 5326 B	U 5326 B
E 1028 U	L 1028 U	LP 1028 U	U 1028 E	U 1028 L	E 1028 B	U 1028 B
E 5028 U	L 5028 U	LP 5028 U	U 5028 E	U 5028 L	E 5028 B	U 5028 B
MUC 128	MUL 128	MU 128	MCS 128	ML 128	-	-
MUC 5128	MUL 5128	MU 5128	MCS 5128	ML 5128	-	-
E 1228 U	L 1228 U	LP 1228 U	U 1228 E	U 1228 L	E 1228 B	E 1228 B
E 5228 U	L 5228 U	LP 5228 U	U 5228 E	U 5228 L	E 5228 B	E 5228 B
NU 328 E	NJ 328 E	NUP 328 E	N 328 E	-	-	-
E 1328 U	L 1328 U	LP 1328 U	U 1328 E	U 1328 L	E 1328 B	U 1328 B
NU 2328 E	NJ 2328 E	NUP 2328 E	N 2328 E	-	-	-
E 5328 U	L 5328 U	LP 5328 U	U 5328 E	U 5328 L	E 5328 B	U 5328 B
E 5030 U	L 5030 U	LP 5030 U	U 5030 E	U 5030 L	E 5030 B	U 5030 B
MUC 130	MUL 130	MU 130	MCS 130	ML 130	-	-
MUC 5130	MUL 5130	MU 5130	MCS 5130	ML 5130	-	-
MUC 230	MUL 230	MU 230	MCS 230	ML 230	-	-
E 1230 U	L 1230 U	LP 1230 U	U 1230 E	U 1230 L	E 1230 B	U 1230 B
E 5230 U	L 5230 U	LP 5230 U	U 5230 E	U 5230 L	E 5230 B	U 5230 B
E 6230 U	L 6230 U	LP 6230 U	U 6230 E	U 6230 L	E 6230 B	U 6230 B
MUC 330	MUL 330	MU 330	MCS 330	ML 330	-	-
E 5330 U	L 5330 U	LP 5330 U	U 5330 E	U 5330 L	E 5330 B	U 5330 B

ROLLWAY® *Radial Bearings*

Basic Construction Type: Cylindrical Roller Bearing

Rolling Elements: Crowned Cylindrical Rollers

Bearing Material: Through Hardened Bearing Grade Steel

Retainer Type: Stamped Steel, Segmented Steel, Two Piece Brass, One Piece Land Riding Brass

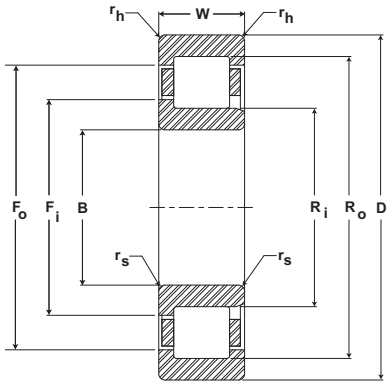

Cylindrical Roller Bearings

B	D	W	Rs	Rh	C	Co	Fi	Ri	Fo	Ro	Bearing Weight
Bore	Outside Diameter	Width	Corner*		Basic Dynamic Rating	Basic Static Rating	Flange O.D. Inner Race	O.D. Inner Race	Flange I.D. Outer Race	I.D. Outer Race	
mm inch	mm inch	mm inch	mm inch	mm inch	N/lb	N/lb	mm inch	mm inch	mm inch	mm inch	kg lb
160 6.2992	240 9.4488	38 1.4961	4.0 .157	2.0 .079	258,272 57,650	396,480 88,500	188.8 7.433	181.2 7.134	212.7 8.374	219.3 8.634	5.9 13.0
		60 2.3622	4.0 .157	2.0 .079	433,619 96,790	771,814 172,280	188.8 7.433	181.2 7.134	212.7 8.374	219.3 8.634	10.0 22.0
	250 9.8425	40 1.5748	2.0 .079	2.0 .079	231,750 51,730	327,578 73,120	192.3 7.571	184.2 7.250	218.3 8.594	225.4 8.874	8.2 18.0
		73 2.8750	2.0 .079	2.0 .079	498,669 111,310	877,408 195,850	192.3 7.571	184.2 7.250	218.3 8.594	225.4 8.874	14.5 31.9
	290 11.4173	48 1.8898	2.5 .098	2.5 .098	449,882 100,420	586,387 130,890	206.0 8.110	193.7 7.626	245.2 9.654	257.2 10.126	15.5 34.1
			6.4 .252	2.5 .098	434,067 96,890	560,179 125,040	205.9 8.106	193.9 7.634	243.8 9.598	257.4 10.134	14.1 31.0
		98.4 3.8750	6.4 .252	2.5 .098	932,154 208,070	1,496,454 334,030	205.9 8.106	193.9 7.634	243.8 9.598	257.4 10.134	30.9 68.0
		196.9 7.7500	6.4 .252	2.5 .098	1,598,150 356,730	2,992,864 668,050	205.9 8.106	193.9 7.634	243.8 9.598	257.4 10.134	57.3 126.1
	340 13.3858	68 2.6772	9.5 .374	3.2 .126	719,622 160,630	887,846 198,180	223.5 8.799	205.9 8.106	278.3 10.957	294.1 11.579	30.9 68.0
			3.0 .118	3.0 .118	815,629 182,060	995,456 222,200	220.5 8.681	203.2 8.000	283.7 11.169	298.5 11.752	32.7 71.9
170 6.6929	260 10.2362	42 1.6535	4.7 .185	2.0 .079	348,230 77,730	547,232 122,150	202.1 7.957	194.9 7.673	227.1 8.941	238.1 9.374	8.6 18.9
		67 2.6378	4.7 .185	2.0 .079	555,117 123,910	996,621 222,460	202.1 7.957	194.9 7.673	227.1 8.941	238.1 9.374	12.3 27.1
	265 10.4331	76.2 3.0000	2.5 .098	2.5 .098	296,755 66,240	415,386 92,720	203.2 8.000	193.7 7.626	231.8 9.125	241.3 9.500	16.8 37.0
		42 1.6535	2.5 .098	2.5 .098	594,630 132,730	1,015,123 226,590	203.2 8.000	193.7 7.626	231.8 9.125	241.3 9.500	9.5 20.9
	310 12.2047	52 2.0472	6.4 .252	3.2 .126	515,827 115,140	678,899 151,540	219.1 8.626	205.5 8.091	261.5 10.295	273.6 10.772	17.7 38.9
		104.8 4.1250	6.4 .252	3.2 .126	1,058,131 236,190	1,709,882 381,670	219.1 8.626	205.5 8.091	261.5 10.295	273.6 10.772	37.7 82.9
	360 14.1732	72 2.8346	3.0 .118	3.0 .118	815,494 182,030	1,009,344 225,300	235.0 9.252	219.1 8.626	298.5 11.752	314.3 12.374	37.7 82.9
		139.7 5.5000	9.5 .374	3.2 .126	1,653,568 369,100	2,473,811 552,190	236.0 9.291	216.7 8.531	295.7 11.642	313.3 12.335	75.0 165.0
180 7.0866	280 11.0236	46 1.8110	4.7 .185	2.0 .079	430,886 96,180	674,061 150,460	215.3 8.476	205.6 8.094	244.6 9.630	254.4 10.016	10.9 24.0
		74 2.9134	4.7 .185	2.0 .079	681,139 152,040	1,214,483 271,090	215.3 8.476	205.6 8.094	244.6 9.630	254.4 10.016	12.3 27.1
		44 1.7323	2.5 .098	2.5 .098	337,075 75,240	476,269 106,310	214.4 8.441	204.8 8.062	245.9 9.680	255.6 10.063	11.0 24.2
		82.6 3.2500	2.5 .098	2.5 .098	698,925 156,010	1,229,715 274,490	214.4 8.441	204.8 8.062	245.9 9.680	255.6 10.063	20.5 45.1
	320 12.5984	52 2.0472	3.0 .118	3.0 .118	483,482 107,920	667,475 148,990	235.0 9.252	222.3 8.752	274.1 10.791	285.8 11.252	17.7 38.9
			6.4 .252	3.2 .126	513,811 114,690	683,738 152,620	229.9 9.051	216.3 8.516	272.3 10.720	284.4 11.197	19.3 42.5
		108 4.2500	6.4 .252	3.2 .126	1,053,965 235,260	1,722,112 384,400	229.9 9.051	216.3 8.516	272.3 10.720	284.4 11.197	40.5 89.1
		75 2.9528	3.0 .118	3.0 .118	857,920 191,500	1,092,134 243,780	250.8 9.874	231.6 9.120	309.9 12.200	327.0 12.874	43.6 95.9

Radial Roller bearings and manufactured to the ABMA RBEC-1 tolerance class. Bearing manufactured to either RBEC-3, RBEC-5 or special tolerance classes are also available upon request.
Unless otherwise specified all Rollway radial roller bearings are manufactured to ABMA's RBEC-1 precision class.
*rs and rh are the maximum shaft and housing fillet radius that can be cleared.
Metric dimensions for reference only.

Not all parts are available from stock. Please contact customer service for availability (800) 626-2120.
For more information on bearing capabilities outside of our standard offering, please contact Application Engineering (800) 626-2093.

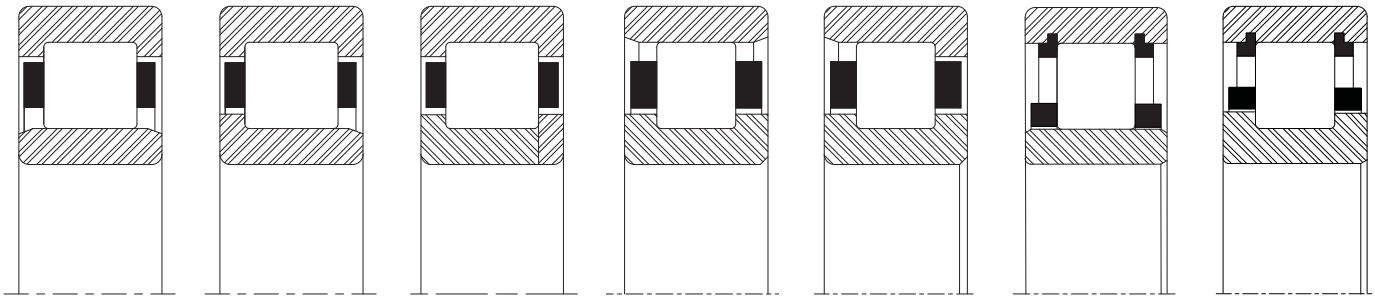

Cylindrical Roller Bearings

Inner Race Separable Both Directions	Inner Race Separable One Direction	Two Piece Inner Race Four-Flange Design	Outer Race Separable Both Directions	Outer Race Separable One Direction	Inner Race Separable Both Directions	Non-Separable
E 1032 U	L 1032 U	LP 1032 U	U 1032 E	U 1032 L	E 1032 B	U 1032 B
E 5032 U	L 5032 U	LP 5032 U	U 5032 E	U 5032 L	E 5332 B	U 5332 B
MUC 132	MUL 132	MU 132	MCS 132	ML 132	-	-
MUC 5132	MUL 5132	MU 5132	MCS 5132	ML 5132	-	-
MUC 232	MUL 232	MU 232	MCS 232	ML 232	-	-
E 1232 U	L 1232 U	LP 1232 U	U 1232 E	U 1232 L	E 1232 B	U 1232 B
E 5232 U	L 5232 U	LP 5232 U	U 5232 E	U 5232 L	E 5232 B	U 5330 B
E 6232 U	L 6232 U	LP 6232 U	U 6232 E	U 6232 L	E 6232 B	U 6232 B
E 1332 U	L 1332 U	LP 1332 U	U 1332 E	U 1332 L	E 1332 B	U 1332 B
MUC 332	MUL 332	MU 332	MCS 332	ML 332	-	-
E 1034 U	L 1034 U	LP 1034 U	U 1034 E	U 1034 L	E 1034 B	U 1034 B
E 5034 U	L 5034 U	LP 5034 U	U 5034 E	U 5034 L	E 5034 B	U 5034 B
MUC 5134	MUL 5134	MU 5134	MCS 5134	ML 5134	-	-
MUC 134	MUL 134	MU 134	MCS 134	ML 134	-	-
E 1234 U	L 1234 U	LP 1234 U	U 1234 E	U 1234 L	E 1234 B	U 1234 B
E 5234 U	L 5234 U	LP 5234 U	U 5234 E	U 5234 L	E 5234 B	U 5234 B
MUC 334	MUL 334	MU 334	MCS 334	ML 334	-	-
E 5334 U	L 5334 U	LP 5334 U	U 5334 E	U 5334 L	E 5334 B	U 5334 B
E 1036 U	L 1036 U	LP 1036 U	U 1036 E	U 1036 L	E 1036 B	U 1036 B
E 5036 U	L 5036 U	LP 5036 U	U 5036 E	U 5036 L	E 5036 B	U 5036 B
MUC 136	MUL 136	MU 136	MCS 136	ML 136	-	-
MUC 5136	MUL 5136	MU 5136	MCS 5136	ML 5136	-	-
MUC 236	MUL 236	MU 236	MCS 236	ML 236	-	-
E 1236 U	L 1236 U	LP 1236 U	U 1236 E	U 1236 L	E 1236 B	U 1236 B
E 5236 U	L 5236 U	LP 5236 U	U 5236 E	U 5236 L	E 5236 B	U 5236 B
MUC 336	MUL 336	MU 336	MCS 336	ML 336	-	-

ROLLWAY® *Radial Bearings*

Basic Construction Type: Cylindrical Roller Bearing

Rolling Elements: Crowned Cylindrical Rollers

Bearing Material: Through Hardened Bearing Grade Steel

Retainer Type: Stamped Steel, Segmented Steel, Two Piece Brass, One Piece Land Riding Brass

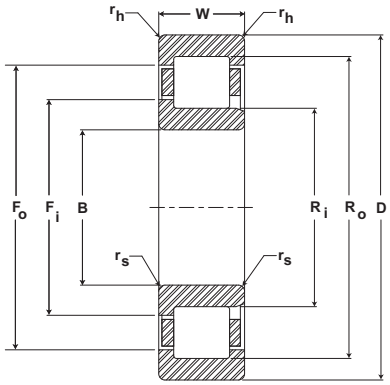

Cylindrical Roller Bearings

B	D	W	Rs	Rh	C	Co	Fi	Ri	Fo	Ro	Bearing Weight
Bore	Outside Diameter	Width	Corner*		Basic Dynamic Rating	Basic Static Rating	Flange O.D. Inner Race	O.D. Inner Race	Flange I.D. Outer Race	I.D. Outer Race	
mm inch	mm inch	mm inch	mm inch	mm inch	N/lb	N/lb	mm inch	mm inch	mm inch	mm inch	kg lb
190 7.4803	290 11.4173	46 1.8110	4.7 .185	2.5 .098	428,422 95,630	677,376 151,200	226.9 8.933	215.6 8.488	26.3 1.035	264.4 10.409	10.9 24.0
		75 2.9528	4.7 .185	2.5 .098	677,197 151,160	1,220,486 272,430	226.9 8.933	215.6 8.488	26.3 1.035	264.4 10.409	19.1 42.0
	300 11.8110	85.7 3.3750	2.5 .098	2.5 .098	742,022 165,630	1,341,805 299,510	229.2 9.024	219.0 8.623	259.7 10.225	269.9 10.626	23.6 51.9
	300 11.8110	46 1.8110	2.5 .098	2.5 .098	357,907 79,890	525,414 117,280	229.2 9.024	219.0 8.623	259.7 10.225	269.9 10.626	14.1 31.0
	340 13.3858	114.3 4.5000	7.9 .311	3.2 .126	1,253,862 279,880	2,111,245 471,260	243.3 9.579	228.9 9.012	288.2 11.346	301.0 11.850	45.0 99.0
	400 15.7480	78 3.0709	4.0 .157	4.0 .157	925,120 206,500	1,168,653 260,860	262.9 10.350	244.5 9.626	303.4 11.945	346.1 13.626	50.0 110.0
200 7.8740	310 12.2047	82 3.2283	4.7 .185	2.0 .079	783,731 174,940	1,384,947 309,140	238.6 9.394	227.7 8.965	271.6 10.693	282.3 11.114	23.2 51.0
	320 12.5984	48 1.8898	2.5 .098	2.5 .098	431,917 96,410	628,365 140,260	243.5 9.587	231.8 9.126	278.9 10.980	288.9 11.374	17.5 38.5
		88.9 3.5000	2.5 .098	2.5 .098	850,214 189,780	1,501,069 335,060	243.5 9.587	231.8 9.126	278.9 10.980	288.9 11.374	30.5 67.1
	360 14.1732	58 2.2835	7.9 .311	3.2 .126	622,810 139,020	838,701 187,210	257.4 10.134	242.2 9.535	304.9 12.004	318.5 12.539	25.9 57.0
		120.7 4.7500	7.9 .311	3.2 .126	1,344,358 300,080	2,255,546 503,470	257.4 10.134	242.2 9.535	304.9 12.004	318.5 12.539	55.9 123.0
	420 16.5354	165.1 6.5000	4.0 .157	4.0 .157	2,114,336 471,950	3,434,726 766,680	280.5 11.043	260.4 10.252	346.1 13.626	362.0 14.252	121.8 268.0
210 8.2677	340 13.3858	50 1.9685	2.5 .098	2.5 .098	515,738 115,120	746,234 166,570	257.0 10.118	244.5 9.626	295.1 11.618	308.0 12.126	20.9 46.0
		95.3 3.7500	2.5 .098	2.5 .098	963,379 215,040	1,666,426 371,970	257.0 10.118	244.5 9.626	295.1 11.618	308.0 12.126	37.7 82.9
	380 14.9606	62 2.4409	3.0 .118	3.0 .118	672,000 150,000	945,370 211,020	276.5 10.886	260.4 10.252	323.9 12.752	336.6 13.252	31.4 69.1
		127 5.0000	9.5 .374	3.2 .126	1,573,107 351,140	2,663,091 594,440	270.1 10.634	253.6 9.984	320.2 12.606	336.2 13.236	72.5 159.5
	440 17.3228	84 3.3071	4.0 .157	4.0 .157	1,095,987 244,640	1,434,675 320,240	287.8 11.331	269.9 10.626	359.9 14.169	377.8 14.874	66.8 147.0
220 8.6614	340 13.3858	75 2.9578	6.4 .252	2.5 .098	940,352 209,900	1,750,470 390,730	262.8 10.346	251.4 9.898	297.3 11.705	308.6 12.150	30.9 68.0
	350 13.7796	98 3.8750	2.5 .098	2.5 .098	1,031,296 230,200	1,841,370 411,020	265.4 10.449	254.0 10.000	307.0 12.085	317.5 12.500	37.7 82.9
	400 15.7480	65 2.5591	3.0 .118	3.0 .118	749,190 167,230	1,041,421 232,460	286.5 11.280	269.9 10.626	336.6 13.252	352.4 13.874	36.4 80.1
			9.5 .374	3.2 .126	835,565 186,510	1,137,830 253,980	283.2 11.150	265.5 10.453	342.4 13.480	354.4 13.953	37.7 82.9
		133.4 5.2500	9.5 .374	3.2 .126	1,721,126 384,180	2,881,222 643,130	283.2 11.150	265.5 10.453	342.4 13.480	354.4 13.953	77.2 169.8
230 9.0551	370 14.5669	53 2.0866	2.5 .098	2.5 .098	603,590 134,730	878,886 196,180	280.2 11.031	266.7 10.500	323.9 12.752	336.6 13.252	25.5 56.1
		101.6 4.0000	2.5 .098	2.5 .098	1,095,002 244,420	1,890,157 421,910	280.2 11.031	266.7 10.500	323.9 12.752	336.6 13.252	44.1 97.0
	420 16.5354	69 2.7165	3.0 .118	3.0 .118	831,578 185,620	1,147,776 256,200	299.6 11.795	282.6 11.126	354.5 13.957	371.5 14.626	43.2 95.0

Radial Roller bearings and manufactured to the ABMA RBEC-1 tolerance class. Bearing manufactured to either RBEC-3, RBEC-5 or special tolerance classes are also available upon request.
Unless otherwise specified all Rollway radial roller bearings are manufactured to ABMA's RBEC-1 precision class.
*rs and rh are the maximum shaft and housing fillet radius that can be cleared.
Metric dimensions for reference only.

Not all parts are available from stock. Please contact customer service for availability (800) 626-2120.
For more information on bearing capabilities outside of our standard offering, please contact Application Engineering (800) 626-2093.

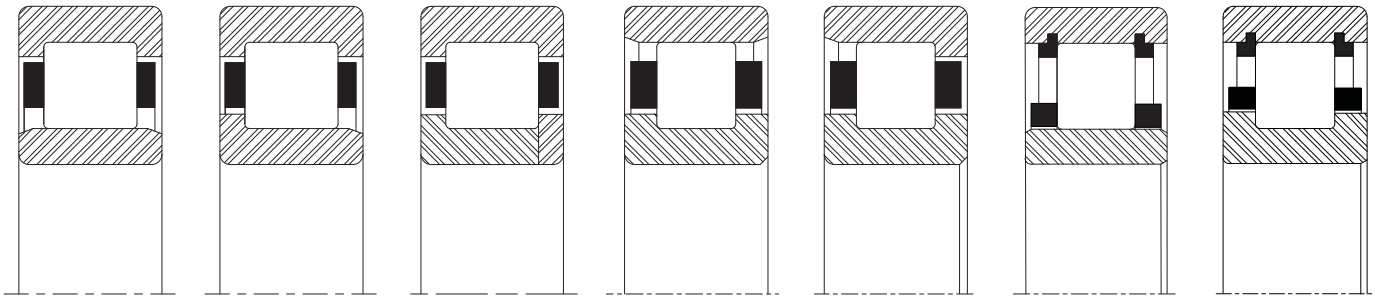

Cylindrical Roller Bearings

Inner Race Separable Both Directions	Inner Race Separable One Direction	Two Piece Inner Race Four-Flange Design	Outer Race Separable Both Directions	Outer Race Separable One Direction	Inner Race Separable Both Directions	Non-Separable
E 1038 U	L 1038 U	LP 1038 U	U 1038 E	U 1038 L	E 1038 B	U 1038 B
E 5038 U	L 5038 U	LP 5038 U	U 5038 E	U 5038 L	E 5038 B	U 5038 B
MUC 5138	MUL 5138	MU 5138	MCS 5138	ML 5138	-	-
MUC 138	MUL 138	MU 138	MCS 138	ML 138	-	-
E 5238 U	L 5238 U	LP 5238 U	U 5238 E	U 5238 L	E 5238 B	U 5238 B
MUC 338	MUL 338	MU 338	MCS 338	ML 338	-	-
E 5040 U	L 5040 U	LP 5040 U	U 5040 E	U 5040 L	E 5040 B	U 5040 B
MUC 140	MUL 140	MU 140	MCS 140	ML 140	-	-
MUC 5140	MUL 5140	MU 5140	MCS 5140	ML 5140	-	-
E 1240 U	L 1240 U	LP 1240 U	U 1240 E	U 1240 L	E 1240 B	U 1240 B
E 5240 U	L 5240 U	LP 5240 U	U 5240 E	U 5240 L	E 5240 B	U 5240 B
E 5340 U	L 5340 U	LP 5340 U	U 5340 E	U 5340 L	E 5340 B	U 5340 B
MUC 142	MUL 142	MU 142	MCS 142	ML 142	-	-
MUC 5142	MUL 5142	MU 5142	MCS 5142	ML 5142	-	-
MUC 242	MUL 242	MU 242	MCS 242	ML 242	-	-
E 5242 U	L 5242 U	LP 5242 U	U 5242 E	U 5242 L	E 5242 B	U 5242 B
MUC 342	MUL 342	MU 342	MCS 342	ML 342	-	-
E 5044 U	L 5044 U	LP 5044 U	U 5044 E	U 5044 L	E 5044 B	U 5044 B
MUC 5144	MUL 5144	MU 5144	MCS 5144	ML 5144	-	-
MUC 244	MUL 244	MU 244	MCS 244	ML 244	-	-
E 1244 U	L 1244 U	LP 1244 U	U 1244 E	U 1244 L	E 1244 B	U 1244 B
E 5244 U	L 5244 U	LP 5244 U	U 5244 E	U 5244 L	E 5244 B	U 5244 B
MUC 146	MUL 146	MU 146	MCS 146	ML 146	-	-
MUC 5146	MUL 5146	MU 5146	MCS 5146	ML 5146	-	-
MUC 246	MUL 246	MU 246	MCS 246	ML 246	-	-

ROLLWAY® *Radial Bearings*

Basic Construction Type: Cylindrical Roller Bearing

Rolling Elements: Crowned Cylindrical Rollers

Bearing Material: Through Hardened Bearing Grade Steel

Retainer Type: Stamped Steel, Segmented Steel, Two Piece Brass, One Piece Land Riding Brass

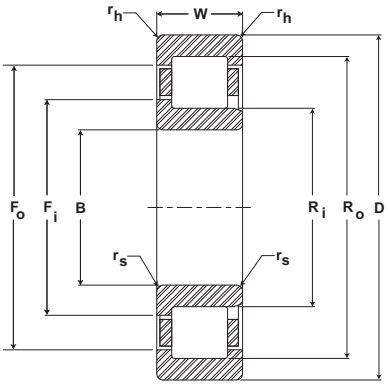

Cylindrical Roller Bearings

B	D	W	Rs	Rh	C	Co	Fi	Ri	Fo	Ro	Bearing Weight
Bore	Outside Diameter	Width	Corner*		Basic Dynamic Rating	Basic Static Rating	Flange O.D. Inner Race	O.D. Inner Race	Flange I.D. Outer Race	I.D. Outer Race	
mm inch	mm inch	mm inch	mm inch	mm inch	N/lb	N/lb	mm inch	mm inch	mm inch	mm inch	kg lb
240 9.4488	390 15.3545	55 2.1654	2.5 .098	2.5 .098	694,355 154,990	1,003,162 223,920	291.6 11.480	277.8 10.937	342.4 13.480	354.0 13.937	30.7 67.5
		108 4.2500	2.5 .098	2.5 .098	1,209,734 270,030	2,048,122 457,170	291.6 11.480	277.8 10.937	342.4 13.480	354.0 13.937	52.7 115.9
	440 17.3228	72 2.8346	3.0 .118	3.0 .118	931,347 207,890	1,283,878 286,580	309.1 12.169	293.7 11.563	373.6 14.709	388.9 15.311	50.0 110.0
		146.1 5.7500	9.5 .374	3.2 .126	2,192,243 489,340	3,694,746 824,720	311.6 12.268	291.2 11.465	374.9 14.760	393.1 15.476	103.0 226.6
	500 19.6850	95 3.7402	4.0 .157	4.0 .157	1,335,488 298,100	1,780,621 397,460	328.4 12.929	308.0 12.126	408.3 16.075	428.6 16.874	95.0 209.0
250 9.8425	410 16.1419	57 2.2441	3.0 .118	3.0 .118	715,187 159,640	1,060,237 236,660	308.7 12.154	293.7 11.563	354.1 13.942	369.9 14.563	32.3 71.1
		111.1 4.3750	3.0 .118	3.0 .118	1,290,733 288,110	2,264,998 505,580	308.7 12.154	293.7 11.563	354.1 13.942	369.9 14.563	60.9 134.0
	520 20.4724	196.9 7.7500	4.0 .157	4.0 .157	2,748,973 613,610	4,581,472 1,022,650	354.3 13.949	330.2 13.000	431.8 17.000	450.9 17.752	224.8 494.6
260 10.2362	430 16.9291	59 2.3228	3.0 .118	3.0 .118	736,109 164,310	1,116,685 249,260	322.8 12.709	308.0 12.126	372.4 14.661	384.2 15.126	38.2 84.0
		114.3 4.5000	3.0 .118	3.0 .118	1,374,061 306,710	2,491,328 556,100	322.8 12.709	308.0 12.126	372.4 14.661	384.2 15.126	69.5 152.9
	480 18.8976	158.8 6.2500	4.0 .157	4.0 .157	2,104,480 469,750	3,593,274 802,070	336.7 13.256	320.7 12.626	406.1 15.988	422.3 16.626	136.0 299.2
	540 21.2598	102 4.0157	5.0 .197	5.0 .197	1,546,810 345,270	2,138,886 477,430	365.3 14.382	342.9 13.500	445.8 17.551	469.9 18.500	130.5 287.1
280 11.0236	460 18.1102	123.8 4.8750	3.0 .118	3.0 .118	1,589,683 354,840	2,906,400 648,750	346.6 13.646	330.2 13.000	398.8 15.701	412.8 16.252	82.3 181.1
	500 19.6850	165.1 6.5000	9.5 .374	4.0 .157	2,845,696 635,200	4,978,714 1,111,320	355.6 14.000	333.0 13.110	427.2 16.819	447.3 17.610	146.8 323.0
	580 22.8346	215.9 8.5000	12.7 .500	5.0 .197	4,261,197 951,160	6,441,344 1,437,800	368.0 14.488	339.9 13.382	487.4 19.189	517.7 20.382	278.1 611.8
300 11.8110	480 18.8970	127 5.0000	8.0 .315	3.2 .126	1,720,006 383,930	3,094,246 690,680	360.7 14.201	344.5 13.563	419.0 16.496	433.4 17.063	65.5 144.1
	540 21.2590	85 3.3465	12.7 .500	4.0 .157	1,710,240 381,750	2,178,758 486,330	366.6 14.433	343.8 13.535	470.3 18.516	496.2 19.535	86.3 189.9
320 12.5984	500 19.6850	71 2.7953	3.0 .118	3.0 .118	982,778 219,370	1,531,712 341,900	381.3 15.012	363.5 14.311	437.1 17.209	452.4 17.811	64.5 141.9
		130.2 5.1250	4.0 .157	3.0 .118	1,768,928 394,850	3,261,082 727,920	381.3 15.012	363.5 14.311	437.1 17.209	452.4 17.811	99.5 218.9
340 13.3850	530 20.8661	133.4 5.2500	-	-	1,452,819 324,290	2,892,198 645,580	415.4 16.354	399.3 15.720	462.6 18.213	475.5 18.720	110.0 242.0
425 16.7480	610 24.0157	146 .1 5.7500	-	-	2,086,560 465,750	4,106,054 916,530	469.9 18.500	453.7 17.862	532.8 20.976	549.0 21.614	154.5 339.9
440 17.3228	660 25.9843	158.8 6.2500	-	-	2,180,819 486,790	4,490,528 1,002,350	520.8 20.504	503.7 19.831	582.8 22.945	599.0 23.583	191.8 422.0

Radial Roller bearings and manufactured to the ABMA RBEC-1 tolerance class. Bearing manufactured to either RBEC-3, RBEC-5 or special tolerance classes are also available upon request.
Unless otherwise specified all Rollway radial roller bearings are manufactured to ABMA's RBEC-1 precision class.
*rs and rh are the maximum shaft and housing fillet radius that can be cleared.
Metric dimensions for reference only.

Not all parts are available from stock. Please contact customer service for availability (800) 626-2120.
For more information on bearing capabilities outside of our standard offering, please contact Application Engineering (800) 626-2093.

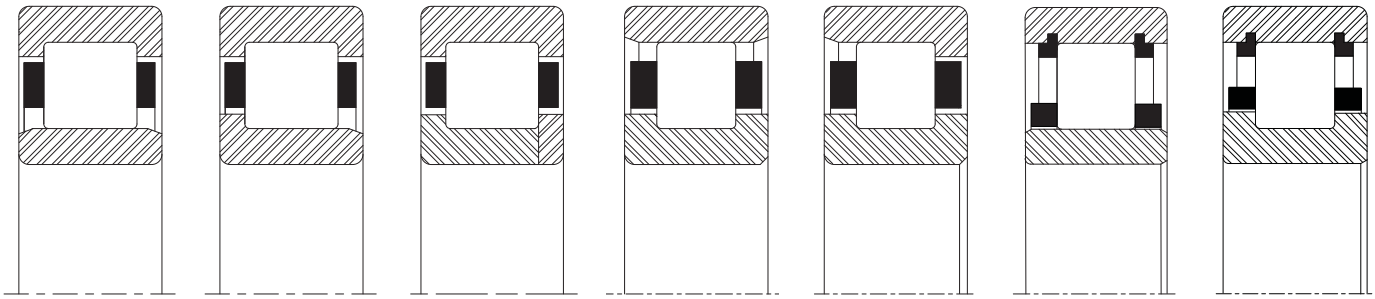

Cylindrical Roller Bearings

Inner Race Separable Both Directions	Inner Race Separable One Direction	Two Piece Inner Race Four-Flange Design	Outer Race Separable Both Directions	Outer Race Separable One Direction	Inner Race Separable Both Directions	Non-Separable
MUC 148	MUL 148	MU 148	MCS 148	ML 148	-	-
MUC 5148	MUL 5148	MU 5148	MCS 5148	ML 5148	-	-
MUC 248	MUL 248	MU 248	MCS 248	ML 248	-	-
E 5248 U	L 5248 U	LP 5248 U	U 5248 E	U 5248 L	E 5248 B	U 5248 B
MUC 348	MUL 348	MU 348	MCS 348	ML 348	-	-
MUC 150	MUL 150	MU 150	MCS 150	ML 150	-	-
MUC 5150	MUL 5150	MU 5150	MCS 5150	ML 5150	-	-
E 5350 U	L 5350 U	LP 5350 U	U 5350 E	U 5350 L	E 5350 B	U 5350 B
MUC 152	MUL 152	MU 152	MCS 152	ML 152	-	-
MUC 5152	MUL 5152	MU 5152	MCS 5152	ML 5152	-	-
E 5252 U	L 5252 U	LP 5252 U	U 5252 E	U 5252 L	E 5252 B	U 5252 B
MUC 352	MUL 352	MU 352	MCS 352	ML 352	-	-
MUC 5156	MUL 5156	MU 5156	MCS 5156	ML 5156	-	-
E 5256 U	L 5256 U	LP 5256 U	U 5256 E	U 5256 L	E 5256 B	U 5256 B
E 5356 U	L 5356 U	LP 5356 U	U 5356 E	U 5356 L	E 5356 B	U 5356 B
MUC 5160	MUL 5160	MU 5160	MCS 5160	ML 5160	-	-
E 1260 U	L 1260 U	LP 1260 U	U 1260 E	U 1260 L	E 1260 B	U 1260 B
MUC 164	MUL 164	MU 164	MCS 164	ML 164	-	-
MUC 5164	MUL 5164	MU 5164	MCS 5164	ML 5164	-	-
MUC 5168	MUL 5168	MU 5168	MCS 5168	ML 5168	-	-
MUC 5180	MUL 5180	MU 5180	MCS 5180	ML 5180	-	-
MUC 5188	MUL 5188	MU 5188	MCS 5188	ML 5188	-	-

Load Ratings and Life

Life Calculations

The L10 (rating) life for any given application and bearing selection can be calculated in terms of millions of revolutions by using the bearing Basic Dynamic Rating and applied radial load (or, equivalent radial load in the case of radial bearing applications having combined radial and thrust loads). The L10 life for any given application can be calculated in terms of hours, using the bearing Basic Dynamic Rating, applied load (or equivalent radial load) and suitable speed factors, by the following equation:

$$L_{10} = \left(\frac{C}{P}\right)^{10/3} x \frac{1{,}000{,}000}{60 \times n} = \left(\frac{C}{P}\right)^{10/3} x \frac{16667}{n}$$

Where:

L_{10} = The # of hours that 90% of identical bearings under ideal conditions will operate at a specific speed and condition before fatigue is expected to occur.

C = Basic Dynamic Rating (lbs) 1,000,000 Revolutions

P = Constant Equivalent Radial Load (lbs)

n = Speed (RPM)

Additionally, the ABMA provides application factors for all types of bearings which need to be considered to determine an adjusted Rated Life (Lna). L10 life rating is based on laboratory conditions yet other factors are encountered in actual bearing application that will reduce bearing life. Lna life rating takes into account reliability factors, material type, and operating conditions.

$$L_{na} = a_1 \times a_2 \times a_3 \times L_{10}$$

Where:

L_{na} = Adjusted Rated Life.

a_1 = Reliability Factor. Adjustment factor applied where estimated fatigue life is based on reliability other than 90% (See Table No 1).

Table No. 1 Life Adjustment Factor for Reliability

Reliability %	L_{na}	a_1
90	L10	1
95	L5	0.62
96	L4	0.53
97	L3	0.44
98	L2	0.33
99	L1	0.21
50	L50	5

a_2 =Material Factor. Life adjustment for bearing race material. Regal Power Transmission Solutions bearing races are manufactured from bearing quality steel. Therefore the a_2 factor is 1.0.

a_3 = Life Adjustment Factor for Operating Conditions. This factor should take into account the adequacy of lubricant, presence of foreign matter, conditions causing changes in material properties, and unusual loading or mounting conditions. Assuming a properly selected and mounted bearing having adequate seals and lubricant operating below 250°F and tight fitted to the shaft, the a3 factor should be 1.0.

Load Ratings and Life Continued

Vibration and shock loading can act as an additional loading to the steady expected applied load. When shock or vibration is present, an a3 Life Adjustment Factor can be applied. Shock loading has many variables which often are not easily determined. Typically, it is best to rely on one's experience with the particular application. Consult Application Engineering for assistance with applications involving shock or vibration loading.

The a3 factor takes into account a wide range of application and mounting conditions as well as bearing features and design. Accurate determination of this factor is normally achieved through testing and in-field experience. Regal Power Transmission Solutions offers a wide range of options which can maximize bearing performance. Consult Application Engineering for more information.

Operating Conditions Factor

The life of a bearing is dependent on the operating conditions of the application. Lubrication, effects of the external environment, shaft and housing geometry and mounting, all have an affect on the actual bearing life. To determine a more realistic life calculation, the Operating Conditions Factor (F) can be included into the L_{10} life equation. The actual values determination will be based on experience of the designer and the expected operating conditions.

Using the Operating Conditions Factor (F) in the life equation, L_{10} life in hours now becomes:

$$L_{10} = F \times \left[\left(\frac{C}{P} \right)^{3.33} \times \frac{16667}{n} \right]$$

Proper selection of the F factor demands intimate knowledge of the application. Where little is known of the application, it is recommended that F = 1 be selected. As a guide in selecting a realistic value for F, Rollway suggests use of the following, cumulative, individual sub-factors, f, to arrive at the over-all factor, F, thus:

$$F = f_1 X f_2 X f_3 X f_4 .....$$

The table below defines the application parameters and values recommended for derivation of the individual sub-factors.

Radial Bearing Factors

Factor	Application Condition	Factor Estimates	
		Poor	Excellent
f_1	Lubricant viscosity suitability @ bearing operating temperature (see Lubrication)	.5	1.0
f_2	External environment and provisions for isolation	.5	1.0
f_3	Operational conditions of shaft and housing squareness & rigidity	.5	1.0
f_4	Machine usage; conventional rotating machinery = 1.0 reciprocating machinery = .55 impact-inducing machinery = .25	.25	1.0
f_5	Thrust load accompanying radial load; below permissible thrust load = 1.0 at or near permissible thrust load = .8 exceeding permissible thrust load by 25% = .5	.5	1.0

Thrust Bearing Factors

Factor	Application Condition	Factor Estimates	
		Poor	Excellent
f_1	Lubricant viscosity suitability @ bearing operating temperature (see Lubrication)	.5	1.0
f_2	External environment and provisions for isolation	.5	1.0
f_3	Operational conditions of shaft and housing squareness & rigidity	.5	1.0
f_4	Bearing thrust plate backing system full backing vs partial backing	.5	1.0

Load Ratings and Life Continued

Variable Load Formula

Root mean load (RML) is to be used when a number of varying loads are applied to a bearing for varying time limits. Maximum loading still must be considered for bearing size selection.

$$\text{RML}^* = \sqrt[10/3]{\frac{(L_1^{10/3}N_1)+(L_2^{10/3}N_2)+(L_3^{10/3}N_3)}{100}}$$

Where:
RML = Root Mean Load (lbs.)
L_1, L_2, etc. = Load in pounds
N_1, N_2, etc. = Percent of total time operated at loads L_1, L_2, etc.

* Apply RML to rating at mean speed to determine resultant life.

Mean Speed Formula

The following formula is to be used when operating speed varies over time.

$$\text{Mean Speed} = \frac{S_1N_1+S_2N_2+S_3N_3}{100}$$

S_1S_2, etc = Speeds in RPM
N_1N_2, etc = Percentage of total time operated at speeds S_1S_2, etc

Bearing Life In Oscillating Applications

The equivalent rotative speed (ERS) is used in life calculations when the bearing does not make complete revolutions during operation. The ERS is then used as the bearing operating speed in the calculation of the L10 (Rating) Life. The formula is based on sufficient angular rotation to have roller paths overlap.

ERS = Equivalent Rotative Speed
N = Total number of degrees per minute through which the bearing will rotate.

$$\text{ERS} = \frac{N}{360}$$

In the above formula, allowance is made for the total number of stress applications on the weakest race per unit time, which, in turn, determines fatigue life and the speed factors. The theory behind fretting corrosion is best explained by the fact that the rolling elements in small angles of oscillation retrace a path over an unchanging area of the inner or outer races where the lubricant is prevented by inertia from flowing in behind the roller as the bearing oscillates in one direction. Upon reversal, this small area of rolling contact is traversed by the same roller in the dry state. The friction of the two unlubricated surfaces causes fretting corrosion and produces failures which are unpredictable from a normal life standpoint.

Load Ratings and Life Continued

With a given bearing selected for an oscillating application, the best lubrication means is a light mineral oil under positive flow conditions. With a light oil, there is a tendency for all areas in the bearing load zone to be immersed in lubricant at all times. The full flow lubrication dictates that any oxidized material which may form is immediately carried away by the lubricant, and since these oxides are abrasive, further wear tends to be avoided. If grease lubrication must be used, it is best to consult with either the bearing manufacturer or the lubricant manufacturer to determine the best possible type of lubricant. Greases have been compounded to resist the detrimental effect of fretting corrosion for such applications.

Static Load Rating

The "static load rating" for rolling element bearings is that uniformly distributed static radial load acting on a non-rotating bearing, which produces a contact stress of 580,000 psi (roller bearings) or 607,000 psi (ball bearings) at the center of the most heavily loaded rolling element. At this stress level, plastic deformation begins to be significant. Experience has shown that the plastic deformation at this stress level can be tolerated in most bearing applications without impairment of subsequent bearing operation. In certain applications where subsequent rotation of the bearing is slow and where smoothness and friction requirements are not too exacting, a higher static load limit can be tolerated. Where extreme smoothness is required or friction requirements are critical, a lower static load limit may be necessary.

Minimum Bearing Load

Skidding, or sliding, of the rolling elements on the raceway instead of a true rolling motion can cause excessive wear. Applications with high speeds and light loading are particularly prone to skidding. As a general guideline, rolling element bearings should be radially loaded at least 2% of Basic Dynamic Rating. For applications where load is light relative to the bearings dynamic load rating, consult Application Engineering for assistance.

High Steady Loads and Shock Loads

Bearing basic dynamic capacity and basic static capacity are determined through a consideration of entirely different factors. The prime consideration for dynamic capacity is the magnitude of the stressed volume of metal and the probability that it will endure a given number of loading cycles. For static capacity, the prime consideration is the influence of the elastic limit and rupture limit as manifested by the extent of the permanent deformations that occur. In view of the seemingly great difference in bases for consideration of dynamic and static capacities, it might be concluded that they bear no relation to one another. Such is not always the case when considering very high steady loads or shock loads present in a rotating bearing. The extent to which these loads approach (or exceed) the basic static capacity will determine the validity of the use of the life formula. More explicitly, when the following relationship exists, ordinary means may be used in determining bearing life.

$$\frac{C_O}{f_S P_O} \geq \frac{C/P}{\left(\frac{n}{33\,1/3}\right)^{0.30}}$$

Where: C_O = Bearing basic static capacity-lbs
P_O = Value of the radial load or maximum shock load-lbs
f_S = Safety factor for high radial or shock loads (dependent on duration of peak load and type of bearing service demanded throughout life of bearing in given application)
- f_S = 0.5 for occasional high steady load but no shock
- f_S = 1.0 for continuous high steady load but no shock
- f_S = 2.0 for maximum shock loads and/or where very smooth subsequent bearing operation is required

C,P = As previously defined
n = Rotational speed - rpm

A warning note on use of the above relation: even when the solution indicates that conventional means may be used in estimating bearing life, such a fatigue life forecast becomes invalid where less-than-optimum lubrication permits shock loads to induce fretting wear (false brinelling).

Radial Engineering Section

Rollway cylindrical radial roller bearings are available in a vast variety of sizes and configurations ranging from standard cataloged, 45mm ID bearings to 1,016 mm outside diameter, special engineered bearings.
The ABMA has established standard design criteria for radial roller bearings. It has defined standard series for the roller bearings by identifying the outside diameter and width for a given bore diameter. The illustration below demonstrates the differences in cross section for the given series.

Rollway Series Codes

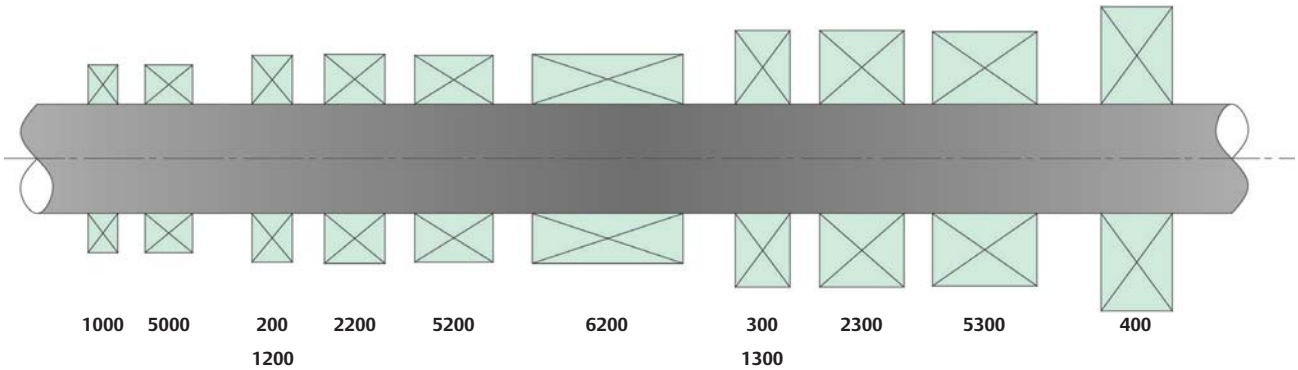

The races and rollers in standard Rollway bearings are made of vacuum-degassed, high alloy, through-hardened and/or case carburized steels that are stabilized for operation up to 250°F for case carburized steel and 335°F for through-hardened steels. For operating temperatures in excess of 335°F, special materials and/or stabilization procedures are necessary.

All Rollway bearings are made with crowned rollers, which satisfy the general requirements for modified-line contact, in accordance with ABMA definitions. The Rollway crowning technique is a highly developed technology including analytical, experimental, processing and quality control techniques to ensure the following:

1. A minimization of end effects and stress concentrations under design load conditions.
2. Detailed understanding and the necessary controls for demanding applications where reliability and higher theoretical capacities are essential.

Vacuum-degassed steels are used in standard bearings; however, consumable-electrode remelted steels (from either air CEVM or vacuum-melted electrodes VIMVAR) are available in all alloys and will be supplied upon request. We also manufacture low quantities of bearing designs with M-50 tool steel for applications requiring high temperature hardness and average operating temperatures over 400°F but less than 800°F.

Designs

Rollway cylindrical radial roller bearings are available in a vast variety of sizes and configurations. The different bearing configurations are described on page E-5 and listed in the bearing product table starting on page E-15. Over the years, the Rollway product offering has increased. Each new product line has its own numbering system, resulting in the current offering of multiple nomenclatures. The three basic numbering systems are Tru-Rol, MAX, and ISO. These three nomenclature systems are defined on the following charts:

Rollway cylindrical radial roller bearings are available in a vast variety of sizes and configurations ranging from standard cataloged, 45mm ID bearings to 1,016 mm outside diameter, special engineered bearings. This section of the catalog covers Rollway cylindrical radial roller bearing configurations, part numbering, material, retainer design and limiting speeds.

Radial Engineering Section continued

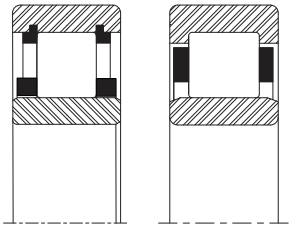

Configuration and Numbering System
Inner Race Separable, Both Directions

Number Systems
E-####-U
E-####-B
MUC-####
NU-###

Two-flange (or retaining rings) outer race, straight inner race, separable bearing. For applications where axial float in both directions is desired. Roller assembly remains with the outer race.

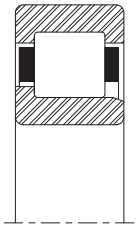

Inner Race Separable, One Direction

Number Systems
L-####-U
MUL-####
NJ-###

Two-flange outer race, one-flange inner race, separable bearing. For applications where axial float in one direction and axial retention in the other direction is desired. Roller assembly remains with the outer race. Will carry light thrust loads in one axial direction.

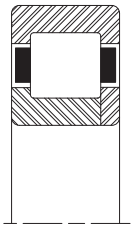

Two Piece Inner Race, Four-Flange Design

Number Systems
LP-####-U
MU-####
NUP-###

Two-flange outer race, two-flange inner race with one flange plate, separable bearing. For applications where axial retention in both directions is desired. Roller assembly remains with the outer race. Will carry light thrust loads in both axial directions.

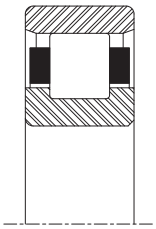

Outer Race Separable Both Directions

Number Systems
U-####-E
MCS-####
N-###

Straight outer race, two-flange inner race, separable bearing. For applications where axial float is desired. Roller assembly remains with the inner race.

Radial Engineering Section continued

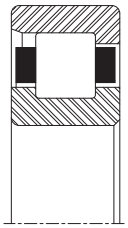

Outer Race Separable One Direction

Number Systems

U-####-L

ML-####

One-flange outer race, two-flange inner race, separable bearing. For applications where axial float in one direction and axial retention in the other directions is desired. Roller assembly remains with the inner race.

Will carry light thrust loads in one direction.

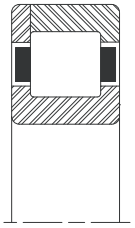

Two-Piece Outer Race Four-Flange Design

Number Systems

U-####-LP

MN-####

Two-flange outer race with one flange plate, two-flange inner race, separable bearing. For applications where axial retention in both directions is desired. Roller assembly remains with the inner race. Will carry light thrust loads in both axial directions.

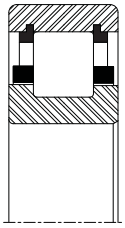

Non-Separable

Number Systems

U-####-B

MS-####

Or when supplied with a full complement of rollers.

Number Systems

UM-####-B

M-####

Two snap-ring flange outer race, two-flange inner race, non-separable bearing. No axial retainer of outer race is required when inner race is properly mounted on shaft. Will not carry thrust loads.

Precision and Tolerance

Standard catalog, radial roller bearings are manufactured to the ABMA RBEC-1 tolerance class. Many applications may require greater precision than standard because of high rotational speeds or other exacting requirements. Bearings manufactured to either RBEC-3, RBEC-5 or special tolerance classes are also available upon request.”

Radial Engineering Section continued

Standard Tolerances RBEC-1

Bore Diameter		Bore Tolerance		Width Tolerance	
over	incl	high (+)	low (-)	high (+)	low (-)
inch mm	inch mm	inch mm	inch mm	inch mm	inch mm
0.0000 0	1.1810 30	0.0000 0.0000	0.0004 0.0102	0.0000 0.0000	0.0047 0.1194
1.1810 30	1.9685 50	0.0000 0.0000	0.0005 0.0127	0.0000 0.0000	0.0047 0.1194
1.9685 50	3.1496 80	0.0000 0.0000	0.0006 0.0152	0.0000 0.0000	0.0059 0.1499
3.1496 80	4.7244 120	0.0000 0.0000	0.0008 0.0203	0.0000 0.0000	0.0079 0.2007
4.7244 120	7.0866 180	0.0000 0.0000	0.0010 0.0254	0.0000 0.0000	0.0098 0.2489
7.0866 180	9.8425 250	0.0000 0.0000	0.0012 0.0305	0.0000 0.0000	0.0118 0.2997
9.8425 250	12.4016 315	0.0000 0.0000	0.0014 0.0356	0.0000 0.0000	0.0138 0.3505
12.4016 315	15.7480 400	0.0000 0.0000	0.0016 0.0406	0.0000 0.0000	0.0157 0.3988
15.7480 400	19.6850 500	0.0000 0.0000	0.0018 0.0457	0.0000 0.0000	0.0177 0.4496
19.6850 500	24.8031 630	0.0000 0.0000	0.0020 0.0508	0.0000 0.0000	0.0197 0.5004
24.8031 630	31.4961 800	0.0000 0.0000	0.0030 0.0762	0.0000 0.0000	0.0295 0.7493

Outside Diameter		Outside Diameter Tolerance	
over	incl	high (+)	low (-)
inch mm	inch mm	inch mm	inch mm
1.1810 30	1.9685 50	0.0000 0.0000	0.0005 0.0127
1.9685 50	3.1496 80	0.0000 0.0000	0.0005 0.0127
3.1496 80	4.7244 120	0.0000 0.0000	0.0006 0.0152
4.7244 120	5.9055 150	0.0000 0.0000	0.0007 0.0178
5.9055 150	7.0866 180	0.0000 0.0000	0.0010 0.0254
7.0866 180	9.8425 250	0.0000 0.0000	0.0012 0.0305
9.8425 250	12.4016 315	0.0000 0.0000	0.0014 0.0356
12.4016 315	15.7480 400	0.0000 0.0000	0.0016 0.0406
15.7480 400	19.6850 500	0.0000 0.0000	0.0018 0.0457
19.6850 500	24.8031 630	0.0000 0.0000	0.0020 0.0508
24.8031 630	31.4961 800	0.0000 0.0000	0.0030 0.0762
31.4961 800	39.3701 1,000	0.0000 0.0000	0.0039 0.0991
39.3701 1,000	49.2126 1,250	0.0000 0.0000	0.0049 0.1245

Standard Tolerances RBEC-3

Bore Diameter		Bore Tolerance		Width Tolerance	
over	incl	high (+)	low (-)	high (+)	low (-)
inch mm	inch mm	inch mm	inch mm	inch mm	inch mm
0.0000 0	1.1810 30	0.0000 0.0000	0.00030 0.00762	0.0000 0.0000	0.0047 0.1194
1.1810 30	1.9685 50	0.0000 0.0000	0.00040 0.01016	0.0000 0.0000	0.0047 0.1194
1.9685 50	3.1496 80	0.0000 0.0000	0.00045 0.01143	0.0000 0.0000	0.0059 0.1499
3.1496 80	4.7244 120	0.0000 0.0000	0.00060 0.01524	0.0000 0.0000	0.0079 0.2007
4.7244 120	7.0866 180	0.0000 0.0000	0.00070 0.01778	0.0000 0.0000	0.0098 0.2489
7.0866 180	9.8425 250	0.0000 0.0000	0.00085 0.02159	0.0000 0.0000	0.0118 0.2997
9.8425 250	12.4016 315	0.0000 0.0000	0.00100 0.02540	0.0000 0.0000	0.0138 0.3505
12.4016 315	15.7480 400	0.0000 0.0000	0.00120 0.03048	0.0000 0.0000	0.0157 0.3988
15.7480 400	19.6850 500	0.0000 0.0000	0.00140 0.03556	0.0000 0.0000	0.0177 0.4496
19.6850 500	24.8031 630	0.0000 0.0000	0.00600 0.15240	0.0000 0.0000	0.0197 0.5004

Outside Diameter		Outside Diameter Tolerance	
over	incl	high (+)	low (-)
inch mm	inch mm	inch mm	inch mm
1.1811 30	1.9685 50	0.0000 0.0000	0.00035 0.00889
1.9685 50	3.1496 80	0.0000 0.0000	0.00045 0.01143
3.1496 80	4.7244 120	0.0000 0.0000	0.00050 0.01270
4.7244 120	5.9055 150	0.0000 0.0000	0.00060 0.01524
5.9055 150	7.0866 180	0.0000 0.0000	0.00070 0.01778
7.0866 180	9.8425 250	0.0000 0.0000	0.00080 0.02032
9.8425 250	12.4016 315	0.0000 0.0000	0.00100 0.02540
12.4016 315	15.7480 400	0.0000 0.0000	0.00110 0.02794
15.7480 400	19.6850 500	0.0000 0.0000	0.00130 0.03302
19.6850 500	24.8031 630	0.0000 0.0000	0.00150 0.03810
24.8031 630	31.4961 800	0.0000 0.0000	0.00180 0.04572

Radial Engineering Section continued

Standard Tolerances RBEC-5

Bore Diameter		Bore Tolerance		Width Tolerance	
over	incl	high (+)	low (-)	high (+)	low (-)
inch mm	inch mm	inch mm	inch mm	inch mm	inch mm
0.0000 0	1.1810 30	0.0000 0.0000	0.00025 0.00635	0.0000 0.0000	0.0047 0.1194
1.1810 30	1.9685 50	0.0000 0.0000	0.00030 0.00762	0.0000 0.0000	0.0047 0.1194
1.9685 50	3.1496 80	0.0000 0.0000	0.00035 0.00889	0.0000 0.0000	0.0059 0.1499
3.1496 80	4.7244 120	0.0000 0.0000	0.00040 0.01016	0.0000 0.0000	0.0079 0.2007
4.7244 120	7.0866 180	0.0000 0.0000	0.00050 0.01270	0.0000 0.0000	0.0098 0.2489
7.0866 180	9.8425 250	0.0000 0.0000	0.00065 0.01651	0.0000 0.0000	0.0118 0.2997
9.8425 250	12.4016 315	0.0000 0.0000	0.00070 0.01778	0.0000 0.0000	0.0138 0.3505
12.4016 315	15.7480 400	0.0000 0.0000	0.00090 0.02286	0.0000 0.0000	0.0157 0.3988

Outside Diameter		Outside Diameter Tolerance	
over	incl	high (+)	low (-)
inch mm	inch mm	inch mm	inch mm
1.1811 30	1.9685 50	0.0000 0.0000	0.00030 0.00762
1.9685 50	3.1496 80	0.0000 0.0000	0.00035 0.00889
3.1496 80	4.7244 120	0.0000 0.0000	0.00040 0.01016
4.7244 120	5.9055 150	0.0000 0.0000	0.00045 0.01143
5.9055 150	7.0866 180	0.0000 0.0000	0.00050 0.01270
7.0866 180	9.8425 250	0.0000 0.0000	0.00060 0.01524
9.8425 250	12.4016 315	0.0000 0.0000	0.00070 0.01778
12.4016 315	15.7480 400	0.0000 0.0000	0.00080 0.02032
15.7480 400	19.6850 500	0.0000 0.0000	0.00090 0.02286
19.6850 500	24.8031 630	0.0000 0.0000	0.00110 0.02794

Internal Clearance

Unmounted internal radial clearance may be determined by two methods:

1. Dimensionally from the geometry of the bearing
2. By an inspection gaging procedure prescribed in the ABMA Standards handbook

Dimensionally, internal radial clearance is equal to the bore of the outer race minus the sum of the inner race OD and two roller diameters. The gaging procedure specifies that one of the bearing races be fixed horizontally on a flat plate. A specified radial load is then applied to the unsupported race, alternately, in diametrically opposing directions. The internal radial clearance is the total displacement of the unsupported race.

The sole reason for manufacturing bearings with differing internal radial clearance is to give the designer a means to achieve predetermined clearance in the mounted revolving bearing. In determining this final running clearance it is necessary to take into consideration, in addition to the effects of shaft, housing interference fits and surface finish, the desire to meet one or more of the following conditions:

1. Optimum load distribution through the rollers to result in maximum life
2. Minimum bearing operating temperature
3. Minimum bearing torque
4. Minimum bearing noise level

The group classification of unmounted radial internal clearance should be specified only after a complete analysis of the resultant clearance of the mounted and operating bearing. The commonly available unmounted internal clearances of Rollway bearings are shown in the following tables. In general, Rollway standard internal clearances for the Tru-Rol and Max numbering systems are equivalent to the ISO C3 clearance.

Radial Engineering Section continued

Radial Bearing Unmounted Internal Clearance

Clearance Codes
Used on Bearings With Tru-Rol and Max Numbering Systems

Bearing Bore Dia		003		005		006 -Standard		007		009	
Over	Up to & include										
inch mm	inch mm	inch mm	inch mm	inch mm	inch mm	inch mm	inch mm	inch mm	inch mm	inch mm	inch mm
0.0000 0	0.5906 15	0.0003 0.0076	0.0011 0.0279	0.0009 0.0229	0.0017 0.0432	0.0010 0.0254	0.0018 0.0457	0.0011 0.0279	0.0019 0.0483	-	-
0.5906 15	0.6693 17	0.0004 0.0102	0.0012 0.0305	0.0009 0.0229	0.0017 0.0432	0.0010 0.0254	0.0018 0.0457	0.0012 0.0305	0.0020 0.0508	-	-
0.6693 17	0.7874 20	0.0005 0.0127	0.0013 0.0330	0.0010 0.0254	0.0018 0.0457	0.0012 0.0305	0.0020 0.0508	0.0014 0.0356	0.0022 0.0559	-	-
0.7874 20	0.9843 25	0.0005 0.0127	0.0015 0.0381	0.0011 0.0279	0.0021 0.0533	0.0013 0.0330	0.0023 0.0584	0.0015 0.0381	0.0025 0.0635	0.0024 0.0610	0.0034 0.0864
0.9843 25	1.1811 30	0.0006 0.0152	0.0016 0.0406	0.0013 0.0330	0.0023 0.0584	0.0015 0.0381	0.0025 0.0635	0.0017 0.0432	0.0027 0.0686	0.0027 0.0686	0.0037 0.0940
1.1811 30	1.3780 35	0.0007 0.0178	0.0017 0.0432	0.0015 0.0381	0.0025 0.0635	0.0017 0.0432	0.0027 0.0686	0.0019 0.0483	0.0029 0.0737	0.0030 0.0762	0.0040 0.1016
1.3780 35	1.5748 40	0.0008 0.0203	0.0018 0.0457	0.0016 0.0406	0.0026 0.0660	0.0018 0.0457	0.0028 0.0711	0.0020 0.0508	0.0030 0.0762	0.0032 0.0813	0.0042 0.1067
1.5748 40	1.7717 45	0.0008 0.0203	0.0020 0.0508	0.0017 0.0432	0.0029 0.0737	0.0020 0.0508	0.0032 0.0813	0.0022 0.0559	0.0034 0.0864	0.0036 0.0914	0.0048 0.1219
1.7717 45	1.9685 50	0.0009 0.0229	0.0021 0.0533	0.0017 0.0432	0.0029 0.0737	0.0020 0.0508	0.0032 0.0813	0.0023 0.0584	0.0035 0.0889	0.0036 0.0914	0.0048 0.1219
1.9685 50	2.1654 55	0.0010 0.0254	0.0022 0.0559	0.0019 0.0483	0.0031 0.0787	0.0022 0.0559	0.0034 0.0864	0.0025 0.0635	0.0037 0.0940	0.0039 0.0991	0.0051 0.1295
2.1654 55	2.3622 60	0.0011 0.0279	0.0023 0.0584	0.0022 0.0559	0.0034 0.0864	0.0025 0.0635	0.0037 0.0940	0.0028 0.0711	0.0040 0.1016	0.0044 0.1118	0.0056 0.1422
2.3622 60	2.5197 64	0.0012 0.0305	0.0024 0.0610	0.0023 0.0584	0.0035 0.0889	0.0025 0.0635	0.0037 0.0940	0.0029 0.0737	0.0041 0.1041	0.0046 0.1168	0.0058 0.1473
2.5197 64	2.7559 70	0.0012 0.0305	0.0026 0.0660	0.0024 0.0610	0.0038 0.0965	0.0027 0.0686	0.0041 0.1041	0.0030 0.0762	0.0044 0.1118	0.0048 0.1219	0.0062 0.1575
2.7559 70	2.9528 75	0.0013 0.0330	0.0027 0.0686	0.0026 0.0660	0.0040 0.1016	0.0030 0.0762	0.0044 0.1118	0.0033 0.0838	0.0047 0.1194	0.0052 0.1321	0.0066 0.1676
2.9528 75	3.1496 80	0.0014 0.0356	0.0028 0.0711	0.0026 0.0660	0.0040 0.1016	0.0030 0.0762	0.0044 0.1118	0.0034 0.0864	0.0048 0.1219	0.0052 0.1321	0.0066 0.1676
3.1496 80	3.3465 85	0.0014 0.0356	0.0030 0.0762	0.0028 0.0711	0.0044 0.1118	0.0032 0.0813	0.0048 0.1219	0.0036 0.0914	0.0052 0.1321	0.0056 0.1422	0.0072 0.1829
3.3465 85	3.5433 90	0.0014 0.0356	0.0030 0.0762	0.0028 0.0711	0.0044 0.1118	0.0032 0.0813	0.0048 0.1219	0.0036 0.0914	0.0052 0.1321	0.0056 0.1422	0.0072 0.1829
3.5433 90	3.7402 95	0.0016 0.0406	0.0032 0.0813	0.0030 0.0762	0.0046 0.1168	0.0034 0.0864	0.0050 0.1270	0.0038 0.0965	0.0054 0.1372	0.0059 0.1499	0.0075 0.1905
3.7402 95	3.9370 100	0.0016 0.0406	0.0032 0.0813	0.0031 0.0787	0.0047 0.1194	0.0035 0.0889	0.0051 0.1295	0.0039 0.0991	0.0055 0.1397	0.0061 0.1549	0.0077 0.1956
3.9370 100	4.1339 105	0.0017 0.0432	0.0035 0.0889	0.0032 0.0813	0.0050 0.1270	0.0037 0.0940	0.0055 0.1397	0.0041 0.1041	0.0059 0.1499	0.0064 0.1626	0.0082 0.2083
4.1339 105	4.3307 110	0.0017 0.0432	0.0035 0.0889	0.0033 0.0838	0.0051 0.1295	0.0038 0.0965	0.0056 0.1422	0.0043 0.1092	0.0061 0.1549	0.0066 0.1676	0.0084 0.2134
4.3307 110	4.7244 120	0.0019 0.0483	0.0037 0.0940	0.0036 0.0914	0.0054 0.1372	0.0041 0.1041	0.0059 0.1499	0.0046 0.1168	0.0064 0.1626	0.0071 0.1803	0.0089 0.2261
4.7244 120	5.1181 130	0.0020 0.0508	0.0040 0.1016	0.0039 0.0991	0.0059 0.1499	0.0044 0.1118	0.0064 0.1626	0.0049 0.1245	0.0069 0.1753	0.0076 0.1930	0.0096 0.2438
5.1181 130	5.5118 140	0.0022 0.0559	0.0042 0.1067	0.0042 0.1067	0.0062 0.1575	0.0048 0.1219	0.0068 0.1727	0.0054 0.1372	0.0074 0.1880	0.0083 0.2108	0.0103 0.2616
5.5118 140	5.9055 150	0.0023 0.0584	0.0045 0.1143	0.0045 0.1143	0.0067 0.1702	0.0051 0.1295	0.0073 0.1854	0.0057 0.1448	0.0079 0.2007	0.0088 0.2235	0.0110 0.2794
5.9055 150	6.2992 160	0.0025 0.0635	0.0047 0.1194	0.0048 0.1219	0.0070 0.1778	0.0054 0.1372	0.0076 0.1930	0.0060 0.1524	0.0082 0.2083	0.0093 0.2362	0.0115 0.2921
6.2992 160	6.6929 170	0.0027 0.0686	0.0049 0.1245	0.0050 0.1270	0.0072 0.1829	0.0057 0.1448	0.0079 0.2007	0.0064 0.1626	0.0086 0.2184	0.0097 0.2464	0.0119 0.3023
6.6929 170	7.0866 180	0.0028 0.0711	0.0052 0.1321	0.0053 0.1346	0.0077 0.1956	0.0060 0.1524	0.0084 0.2134	0.0067 0.1702	0.0091 0.2311	0.0130 0.3302	0.0127 0.3226
7.0866 180	7.4803 190	0.0030 0.0762	0.0054 0.1372	0.0056 0.1422	0.0080 0.2032	0.0063 0.1600	0.0087 0.2210	0.0072 0.1829	0.0096 0.2438	0.0110 0.2794	0.0134 0.3404
7.4803 190	7.8740 200	0.0032 0.0813	0.0058 0.1473	0.0059 0.1499	0.0085 0.2159	0.0067 0.1702	0.0093 0.2362	0.0075 0.1905	0.0101 0.2565	0.0115 0.2921	0.0141 0.3581
7.8740 200	8.6614 220	0.0035 0.0889	0.0061 0.1549	0.0063 0.1600	0.0089 0.2261	0.0072 0.1829	0.0098 0.2489	0.0080 0.2032	0.0106 0.2692	-	-
8.6614 220	9.4488 240	0.0038 0.0965	0.0066 0.1676	0.0070 0.1778	0.0098 0.2489	0.0078 0.1981	0.0106 0.2692	0.0087 0.2210	0.0115 0.2921	-	-
9.4488 240	10.2362 260	0.0042 0.1067	0.0070 0.1778	0.0076 0.1930	0.0104 0.2642	0.0085 0.2159	0.0113 0.2870	0.0096 0.2438	0.0124 0.3150	-	-
10.2362 260	11.0236 280	0.0045 0.1143	0.0075 0.1905	0.0080 0.2032	0.0110 0.2794	0.0090 0.2286	0.0120 0.3048	0.0101 0.2565	0.0131 0.3327	-	-
11.0236 280	11.8110 300	0.0049 0.1245	0.0079 0.2007	0.0085 0.2159	0.0115 0.2921	0.0097 0.2464	0.0127 0.3226	0.0109 0.2769	0.0139 0.3531	-	-
11.8110 300	12.5984 320	0.0053 0.1346	0.0083 0.2108	0.0093 0.2362	0.0123 0.3124	0.0105 0.2667	0.0135 0.3429	0.0117 0.2972	0.0147 0.3734	-	-

Radial Engineering Section continued

Radial Bearing Unmounted Internal Clearance

Clearance Codes
Used on Bearings With ISO Numbering Systems

Bearing Bore Dia		C2		C0 Standard		C3		C4		C5	
Over	Up to & include										
inch mm	inch mm	inch mm	inch mm	inch mm	inch mm	inch mm	inch mm	inch mm	inch mm	inch mm	inch mm
0.0000 0	0.3937 10	0.0000 0.0000	0.0012 0.0305	0.0004 0.0102	0.0016 0.0406	0.0010 0.0254	0.0022 0.0559	0.0014 0.0356	0.0026 0.0660	0.0022 0.0559	0.0033 0.0838
0.3937 10	0.7087 18	0.0000 0.0000	0.0012 0.0305	0.0004 0.0102	0.0016 0.0406	0.0010 0.0254	0.0022 0.0559	0.0014 0.0356	0.0026 0.0660	0.0022 0.0559	0.0033 0.0838
0.7087 18	0.9449 24	0.0000 0.0000	0.0012 0.0305	0.0004 0.0102	0.0016 0.0406	0.0010 0.0254	0.0022 0.0559	0.0014 0.0356	0.0026 0.0660	0.0022 0.0559	0.0033 0.0838
0.9449 24	1.1811 30	0.0000 0.0000	0.0012 0.0305	0.0004 0.0102	0.0018 0.0457	0.0012 0.0305	0.0026 0.0660	0.0016 0.0406	0.0028 0.0711	0.0024 0.0610	0.0037 0.0940
1.1811 30	1.5748 40	0.0000 0.0000	0.0014 0.0356	0.0006 0.0152	0.0020 0.0508	0.0014 0.0356	0.0028 0.0711	0.0018 0.0457	0.0032 0.0813	0.0028 0.0711	0.0041 0.1041
1.5748 40	1.9685 50	0.0002 0.0051	0.0016 0.0406	0.0008 0.0203	0.0022 0.0559	0.0016 0.0406	0.0030 0.0762	0.0022 0.0559	0.0035 0.0889	0.0033 0.0838	0.0047 0.1194
1.9685 50	2.5591 65	0.0002 0.0051	0.0018 0.0457	0.0008 0.0203	0.0026 0.0660	0.0018 0.0457	0.0035 0.0889	0.0026 0.0660	0.0041 0.1041	0.0039 0.0991	0.0055 0.1397
2.5591 65	3.1496 80	0.0002 0.0051	0.0022 0.0559	0.0010 0.0254	0.0030 0.0762	0.0022 0.0559	0.0041 0.1041	0.0030 0.0762	0.0049 0.1245	0.0045 0.1143	0.0065 0.1651
3.1496 80	3.9370 100	0.0004 0.0102	0.0024 0.0610	0.0012 0.0305	0.0032 0.0813	0.0026 0.0660	0.0045 0.1143	0.0035 0.0889	0.0055 0.1397	0.0057 0.1448	0.0077 0.1956
3.9370 100	4.7244 120	0.0004 0.0102	0.0026 0.0660	0.0014 0.0356	0.0035 0.0889	0.0032 0.0813	0.0053 0.1346	0.0041 0.1041	0.0063 0.1600	0.0065 0.1651	0.0087 0.2210
4.7244 120	5.5118 140	0.0004 0.0102	0.0030 0.0762	0.0016 0.0406	0.0041 0.1041	0.0035 0.0889	0.0061 0.1549	0.0045 0.1143	0.0071 0.1803	0.0073 0.1854	0.0098 0.2489
5.5118 140	6.2992 160	0.0006 0.0152	0.0032 0.0813	0.0020 0.0508	0.0045 0.1143	0.0039 0.0991	0.0065 0.1651	0.0051 0.1295	0.0077 0.1956	0.0083 0.2108	0.0108 0.2743
6.2992 160	7.0866 180	0.0008 0.0203	0.0034 0.0864	0.0024 0.0610	0.0049 0.1245	0.0043 0.1092	0.0069 0.1753	0.0059 0.1499	0.0085 0.2159	0.0093 0.2362	0.0118 0.2997
7.0866 180	7.8740 200	0.0010 0.0254	0.0037 0.0940	0.0026 0.0660	0.0053 0.1346	0.0049 0.1245	0.0077 0.1956	0.0065 0.1651	0.0092 0.2337	0.0102 0.2591	0.0123 0.3124
7.8740 200	8.8583 225	0.0012 0.0305	0.0041 0.1041	0.0030 0.0762	0.0059 0.1499	0.0055 0.1397	0.0085 0.2159	0.0071 0.1803	0.0100 0.2540	0.0014 0.0356	0.0144 0.3658
8.8583 225	9.8425 250	0.0016 0.0406	0.0045 0.1143	0.0035 0.0889	0.0065 0.1651	0.0061 0.1549	0.0090 0.2286	0.0081 0.2057	0.0110 0.2794	0.0126 0.3200	0.0156 0.3962
9.8425 250	11.0236 280	0.0018 0.0457	0.0049 0.1245	0.0039 0.0991	0.0071 0.1803	0.0069 0.1753	0.0100 0.2540	0.0090 0.2286	0.0122 0.3099	0.0140 0.3556	0.0171 0.4343
11.0236 280	12.4016 315	0.0020 0.0508	0.0052 0.1321	0.0043 0.1092	0.0077 0.1956	0.0077 0.1956	0.0110 0.2794	0.0100 0.2540	0.0134 0.3404	0.0157 0.3988	0.0191 0.4851
12.4016 315	13.9764 355	0.0022 0.0559	0.0057 0.1448	0.0049 0.1245	0.0085 0.2159	0.0085 0.2159	0.0120 0.3048	0.0110 0.2794	0.0146 0.3708	0.0173 0.4394	0.0209 0.5309
13.9764 355	15.7480 400	0.0026 0.0660	0.0063 0.1600	0.0055 0.1397	0.0093 0.2362	0.0096 0.2438	0.0134 0.3404	0.0126 0.3200	0.0163 0.4140	0.0197 0.5004	0.0234 0.5944
15.7480 400	17.7165 450	0.0028 0.0711	0.0075 0.1905	0.0061 0.1549	0.0108 0.2743	0.0106 0.2692	0.0153 0.3886	0.0140 0.3556	0.0179 0.4547	0.0219 0.5563	0.0266 0.6756
17.7165 450	19.6850 500	0.0033 0.0838	0.0081 0.2057	0.0071 0.1803	0.0118 0.2997	0.0118 0.2997	0.0165 0.4191	0.0155 0.3937	0.0202 0.5131	0.0244 0.6198	0.0291 0.7391

Radial Engineering Section continued

The resultant bearing internal radial clearance after mounting and with the bearing in operation will differ from the unmounted clearance due to:

1. The press fit between the shaft and inner race and/or a press fit between the housing and outer race, each resulting in an internal clearance reduction.
2. An increase in the temperature of the inner race over that of the outer race, which will result in a reduction of internal clearance. Conversely, an increase in temperature of the outer race over that of the inner race may result in increased internal clearance.

The formula for the resultant internal clearance of the bearing after mounting and in operation is:

$$Sr = [S0 - (S1 \pm S2 - S3 \pm Sx)] \geq 0$$

Where:
Sr = Resultant clearance - .0001 in.
S0 = Initial (unmounted) clearance
S1 = Clearance reduction due to interference fits
S2 = Clearance reduction, or increase, due to race temperature differential
S3 = Clearance increase due to load
Sx = Clearance reduction, or increase, due to high rotational speed or any other effects

Determination of terms S1 through Sx is described in the following paragraphs.

The clearance reduction due to fit is the sum of the effective inner race expansion, a, and the effective outer race contraction, b, under given press fit conditions (shaft and housing fits).

$$S1 = a + b\ (.0001")$$

Where a and b are as follows:

a. a = expansion of the inner race is estimated; (interference fit) X .75
b. b = contraction of the outer race is estimated; (interference fit) X .85

And assumes the application has

1. solid shaft
2. rigid housing

In the case of a hollow shaft, and/or flexible housing, Application Engineering should be consulted for resultant fits.

Operating conditions normally will not be so unusual that other clearance effects (Sx) must be considered. However, unusual cases do occur. It is suggested that Application Engineering be consulted when conditions may exist which warrant consideration of clearance changes (Sx) that are not covered by terms S1, S2, and S3.

Radial Engineering Section continued

Limiting Speed

The limiting speed of a roller bearing is the rotational speed at which it may be operated based on geometry, retainer construction, lubricant and lubrication method without incurring a temperature rise within the bearing which would cause lubricant breakdown, softening of components, or seizure. The criterion used is the dn value where d equals the bearing pitch diameter (mm) and n equals the bearing rotation speed (rpm). The dn numbers applying to specific retainers are provided in the table below. To calculate the bearing limiting speed, one can divide the dn number by the bearing pitch diameter in mm to obtain the bearing limiting speed in rpm. This dn number provides the suggested safe limiting speeds for cylindrical radial roller bearings with various types of retainer construction based on recirculating oil lubrication with a lubricant of adequate viscosity.

Rollway Limiting Speed Factors

Retainer Type	dn Factor
Full roller complement	240000
Stamped Steel	380000
Segmented Steel	700000
Two-Piece Brass	700000
One-Piece Land Riding	1400000

In the selection of a retainer design for obtaining the highest practical roller bearing operating speed, it is often necessary to consider other factors than speed alone. For example, a two-piece drilled retainer might be selected over a segmented retainer where the torsional loading on the retainer is severe even though the segmented type appears adequate with respect to speed. It should be noted that suggested limiting speeds are provided for the standard roller-riding retainers (segmented, two-piece drilled and window-type stamped steel) and one-piece land riding retainers. Special retainer designs for each of these types permit higher operating speeds and are available upon request.

When using the table above, the following guidelines should be followed:

- For grease lubricant applications, use 80% of the calculated limiting speed.
- For air-oil mist lubricant applications, use 150% of the calculated limiting speed.
- For fixed volume of non-recirculated oil, use 85% of the calculated limiting speed.
- For double width and multi-row designs, use 67% of the calculated limiting speed.

Radial Engineering Section continued

Radial Bearing Axial Load Capacity

Cylindrical roller bearings that contain flanges on both the inner and outer rings are able to support axial loads in addition to radial loads. The axial load capability is determined through a consideration of the sliding friction and resultant wear taking place between the roller ends and flange faces. The factors having the greatest effect on this sliding friction are the bearing lubrication, operating temperature, and heat dissipation from the bearing.

Radial dynamic capacity is determined through a consideration of the fatigue strength of the bearing material. Thrust capacity is determined through a consideration of the sliding friction and resultant wear taking place between the roller ends and flange faces. Heat generated by the sliding friction must be effectively dissipated throughout the bearing components and by the lubricant in order to maintain thermal equilibrium at a reasonable temperature. The advantage of the cylindrical roller bearing under combined radial and thrust loads is apparent when it is observed that the radial load and the thrust load are taken by two different surfaces. In view of this, there should be no reduction in expected life, which is determined solely by the existing radial load, when thrust load are taken by the bearing.

Thrust capacity is dependent upon bearing design and application characteristics. Bearing design characteristics include:

a. Apparent contact area between rollers ends and mating flange surfaces.
b. Surface finish of the mating surfaces.
c. Geometry of the mating surfaces.
d. Internal radial clearance and axial clearance of the roller in the roller track.

Application characteristics are a function of:

a. Sliding velocity at the contact surfaces (rpm and bearing size)
b. Quality and quantity of the lubricant and effectiveness of the lubrication system.
c. Type and duration of thrust loads.
d. Influence of the shaft and housing in heat dissipation
e. Operating temperatures.

A radial bearing should not be used in applications where there are essentially large thrust loads with no significant radial loads. In most applications, machine masses are of sufficient magnitude to apply a substantial radial load on the bearing without external radial forces. In these cases there will be sufficient radial load to allow satisfactory operation under substantial thrust loads. As a general rule, Rollway radial bearing thrust capacity is 10% of the published radial bearing dynamic rating.

Lubrication

In general, the required viscosity for the lubricant on cylindrical radial bearings is 110 SSU at operating temperature. For further information in regards to bearing lubrication, please refer to page A-17 of this catalog.


ROLLWAY T 16050 USA

Thrust

Unmounted bearing assembly consisting of through hardened housing and shaft plate (raceways) with cylindrical or tapered rolling elements separated by a centrifugally cast brass retainer (cage). Thrust bearings are ideal for applications with loads parallel to the shaft.

Bearing Configurations

Single Or Multistage

Rolling Element Styles

Cylindrical Or Tapered

Bore Diameter Size Range

1” To 18” (25.4 mm To 457 mm)

Materials

Bearing Quality Steel

Thrust Selection Guide

	Type	Description	Size Range
	**Txxx**	Cylindrical Roller Thrust	6” - 34”
	**Atxxx**	Aligning Cylindrical Roller Thrust	6” - 35”
	**T-xxx**	Tapered Roller Thrust	8” - 33”
	**T-xxxx-F**	T-flat Tapered Roller Thrust	10.5” - 34”
	**T-xxxx-FS**	Aligning T-Flat Tapered Roller Thrust	19” - 34”
	**CTxxx**	Crane Hook Thrust	3” - 18.5”
	**WCTxxx**	Crane Hook Thrust w/ Fitting	3” - 18.5”

* For estimating purpose only, individually sizes may vary and are subject to change without notification

Design Characteristics						Features		
Static Load	Dynamic Load	Reversing Load	Higher Speed	Horizontal Installation	Relative Base Cost *	Self Aligning	Grease Fitting	Page No.
◒	◒	○	●	◒	$			F-13
◒	◒	○	●	◒	$$	S		F-17
●	●	○	◒	●	$$			F-27
●	●	○	◒	●	$$			F-29
●	●	○	◒	●	$$	S		F-30
●	◒	○	○	◒	$$		S	F-21
●	◒	○	○	◒	$$			F-21

Misalignment Capability

External Greasing

O = Optional
S = Standard
○ = Not Recommended

○ ◒ ◒ ◒ ●

Poor ⟷ Best

Thrust Selection Guide

	Type	Description	Size Range
	TAB-xxxx	2 Stage Tandem Thrust	4.3” - 34”
	TAC-xxxx	3 Stage Tandem Thrust	3.5” - 34”
	TAD/TMD-xxxx	4 Stage Tandem Thrust	3.9” - 12”
	TAF/TMF-xxxx	6 Stage Tandem Thrust	3.5” - 6”
	TMH-xxxx	8 Stage Tandem Thrust	3.5” - 14”

* For estimating purpose only, individually sizes may vary and are subject to change without notification

Design Characteristics						Features			
Static Load	Dynamic Load	Reversing Load	Higher Speed	Horizontal Installation	Relative Base Cost *	Self Aligning	Grease Fitting	Oil Holes / Pathway	Page No.
●	●	○	◒	◒	$$$			S	F-35
●	●	○	◒	◒	$$$			S	F-36
●	●	○	◒	◒	$$$			S	F-37
●	●	○	◒	◒	$$$			S	F-38
●	●	○	◒	◒	$$$			S	F-39

Misalignment Capability

External Greasing

Relubrication and Long Bearing Life

O = Optional

S = Standard

○ = Not Recommended

◔ ◒ ◕ ◕ ●

Poor ←——→ Best

Rollway Cylindrical Thrust Bearings

Rollway Cylindrical Thrust bearings utilize crowned cylindrical rolling elements separated by a machined brass roller riding retainer (cage) contained within precision ground shaft and housing plates. These bearings are intended for axial loads (load parallel to the axis of rotation) and are designed as medium or heavy duty series. Either series is available in three configuration types including double acting, self aligning and the most widely used "single acting" variety. Depending on your preference, these bearings are available in a wide variety of sizes and options as illustrated on the pages to follow.

Cylindrical roller thrust Inch series bearings are divided into two basic classes: medium (600 series) and heavy (700 series). The medium series has a smaller cross section and the retainer typically has only one roller per roller pocket. The heavy series has a larger cross section and the retainer typically has more than one roller per roller pocket.

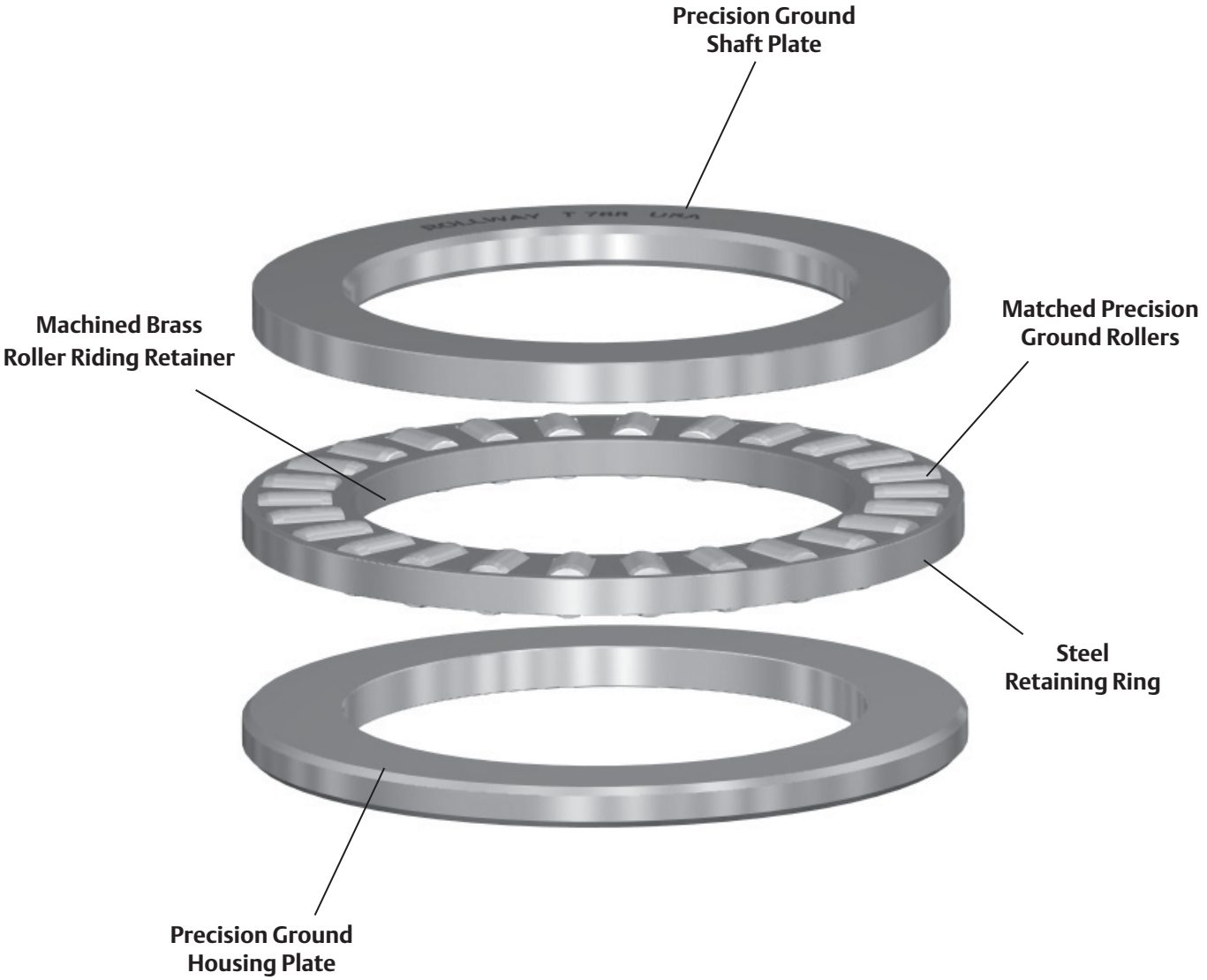

Cylindrical Thrust Nomenclature

Type Designator
Bearing Configuration Description

Size Designator
Reference Catalog For Sizes.

Variation Code
Variation Codes Are Divided Into Two Categories: Special And Standard.

T 625 203

Type Designator

T - Single acting thrust
AT - Single acting thrust - aligning type.
DT - Double acting thrust
DAT - Double acting thrust - aligning type.
BSDT - Double acting thrust - simplified design
CT - Single acting thrust - special design for crane hook applications with weathershed
WCT - Single acting thrust - special design for crane hook applications with weathershed and grease fitting

Size Designator

Reference catalog for sizes.

Variation Codes

Special variation codes

201 to 215 and 240 to 254 - are numerically assigned codes that designate the variation from standard (example 201 = 1st variation, 202 = 2nd variation, etc.). These bearing code numbers do not in any way reference the modification from standard. Application Engineering must be contacted for information concerning a particular modification.

Standard variation codes

216 to 239 and 255 to 299 - 216 to 239 and 255 to 299 are code numbers representing standard modifications with the most popular listed below:

- **059 -** Brass retainer - this code is obsolete, all standard thrust bearings are supplied with centrifugally cast brass retainers
- **210 -** Roller assembly supplied with hardened steel outer ring
- 216 - Standard bearing supplied without shaft plate
- **219 - T**andem bearing design (typically these have been replaced with TAB to TAC bearings)
- **221 -** Standard bearing with a brass ring pressed in bore for horizontal shaft applications
- **226 -** Standard bearing supplied with two shaft plates
- **229 -** Same as 219.

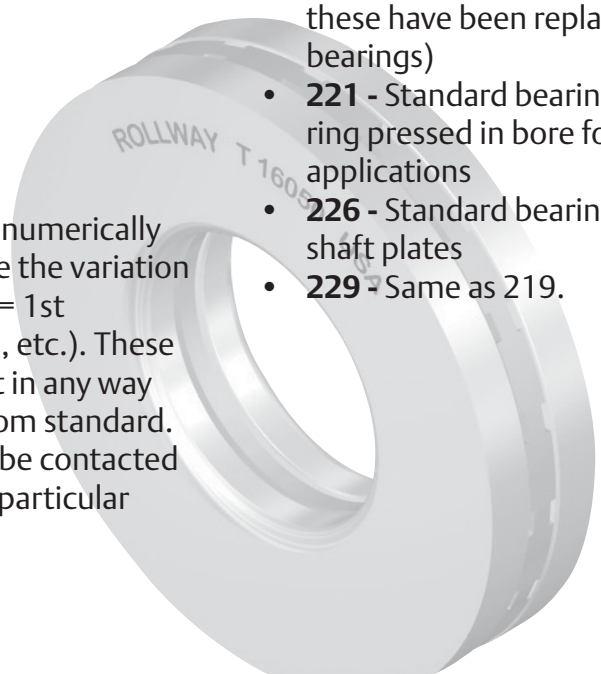

Features and Benefits

Precision Ground Shaft Plate

Bore is precision ground for a line to loose fit on shaft. The O.D. has a turned finish and is smaller than the housing plate's O.D. Shaft Plates are manufactured to conform to ABMA size and tolerance specifications.

Matched Precision Ground Rollers

Rollers are manufactured from Through Hardened Bearing Grade Steel. The surfaces are ground, superfinished, and matched to .0001". The ends of the rollers have a large machined radius designed to reduce friction between the roller and the retaining ring. The larger diameter bearings use multiple rollers per pocket to minimize slippage. All rolling elements are precision ground to provide even distribution of load over the contact surfaces. The rollers are all crowned thus permitting unmodified use of the ABMA's capacity formula. Roller crowning reduces the edge stresses between the roller and the thrust plates.

Machined Brass Roller Riding Retainer

Rollway thrust bearing retainers are machined from centrifugally cast brass. The retainers for all cylindrical roller thrust bearings are designed to be roller riding. The contoured roller pockets are accurately machined at right angles to the thrust force, which will be applied to the bearing. The rollers are retained in the assembly by a steel ring pinned to the outside diameter of the retainer.

Precision Ground Housing Plate

O.D. is precision ground for a line to loose fit in housing bore. The I.D. has a turned finish and is larger than the shaft plate's I.D. Housing Plates are manufactured to conform to ABMA size and tolerance specifications. All thrust plates are accurately ground for flatness and parallelism of the roller riding and backing surfaces. The contact surfaces of the plates are super-finished to provide for long life. Locating diameters are ground to obtain an accurate fit on the shaft or in the housing.

Options

Materials

The plates and rollers are made from either through-hardened or carburizing grade steel with hardness to Rockwell (Rc) 58-63. Upon request we can manufacture these components from CEVM or VIMVAR grades of material and M- 50 tool steel for high temperature applications.

Types and Styles

Inch Series — Single Acting

The single acting bearing is the most popular thrust bearing of the inch series. The bearing is often referred to as a "three piece thrust bearing". One of the thrust plates is stationary with respect to the shaft and is ground in the bore for an accurate fit on the shaft. The roller assembly is located by the shaft and its inside diameter is machined to provide the correct operating clearance. The second thrust plate is stationary with the housing and is ground on the outside diameter for an accurate fit in the housing. The non-locating diameters of both thrust plates are specially designed to allow lubricant flow. The sizes range from 1 to 22 inches I.D. and 2.125 to 34 inches O.D. with dynamic capacities from 10,000 lbs to 1,620,000 lbs. These bearings are used in a variety of applications such as extruder gear drives, pumps, crane hook swivels and machine tools.

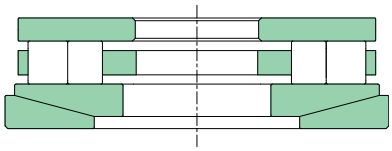

"AT" Aligning Type

The aligning style design replaces the housing plate with aligning plates. The aligning plates are matched plates, one convex and one concave, that will correct for 3° initial static misalignment. These aligning plates are not designed for applications requiring dynamic aligning capabilities. They are designed to correct an initial misalignment prior to full loading. The concave plate (housing plate) is precision ground but not hardened.

The standard "AT" type is recommended for vertical shaft applications. Where the alignment feature is required in some horizontal shaft applications, the convex aligning plate may ride on the shaft and the plate should be modified to provide a satisfactory bearing surface in the bore. This is usually achieved by the installation of a brass bushing into the bore of the plate.

Types and Styles continued

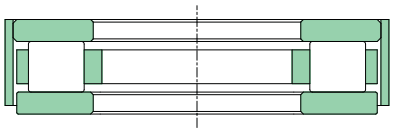

Crane Hook Thrust Bearings

Crane hook bearings are similar to the single acting inch series but are specifically designed for crane hooks or similar applications where heavy thrust loads and low speeds of rotation are encountered. Crane hook bearings are simply single acting thrust bearings supplied with a weathershed. The weathershed is a steel band pressed on to the rotating plate extending to the middle of the stationary plate forming a shield to help protect the roller assembly.

The weathersheds are supplied with or without grease fittings.

This type of bearing undergoes static loading in normal applications. Our static capacities are based on a total permanent deformation of .0002 inch per inch of roller diameter and are not the ABMA basic capacity.

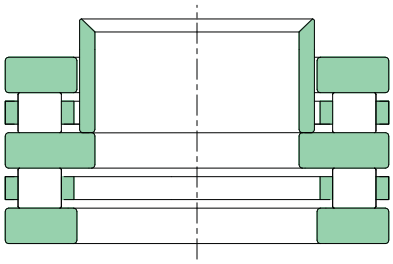

“DT” Double Acting Thrust

The “DT” type thrust bearing is a double acting thrust bearing that will withstand reversal in the direction of the load at normal speeds of rotation. The center thrust plate and sleeve must be keyed to the shaft or clamped tightly between the shaft shoulders to prevent rotation of the center plate relative to the shaft. The two outer thrust plates are stationary with respect to the housing. There are two roller assemblies on either side of the center thrust plate. The center plate drives the roller assembly corresponding to the direction of the thrust load.

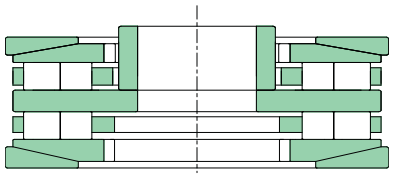

“DAT” Aligning, Double Acting Thrust

This bearing is basically a combination of the “DT” type and the “AT” type. The bearing is designed to take reversals in thrust load and correct for initial static misalignment up to 3°.

Types and Styles continued

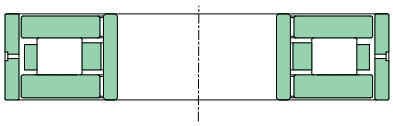

"SDT" Simplified Double Acting Thrust

This bearing is similar in concept to the "DT" double acting type except the design has been simplified to only one roller assembly and two thrust plates. With the load in one direction, one of the thrust plates is stationary with respect to the housing and the other thrust plate rotates. When the direction of the load is reversed, the stationary plate rotates and the rotating plate becomes the stationary plate.

To provide necessary clearance for this action, the inner and outer spacer sleeves are made wider than the combined thickness of the thrust plates and roller assembly. This bearing is recommended for applications where the direction of the thrust load changes when the bearing is stationary or rotating at slow speed.

Basic Construction Type: Standard Cylindrical Roller Thrust Or Aligning Type Bearing

Rolling Elements: Crowned Cylindrical Rollers With Sphered Ends

Bearing Material: Through Hardened Or Case Carburized Bearing Grade Steel

Series: Medium Duty (600), Heavy Duty (700), Or Metric

Retainer Types: Machined Brass With Steel Retaining Ring

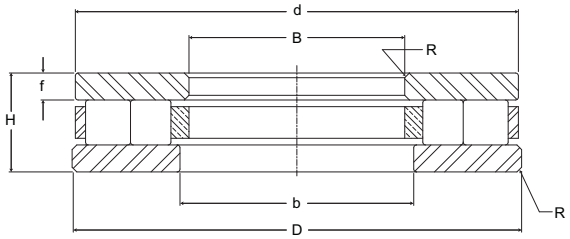

Cylindrical Roller Thrust Bearings

Part No.	B	D	H	b	d	f	R	Bearing Weight	C	Co
	Bore	Outside Diameter	Height	Internal Dimensions			Housing & Shaft Fillet		Basic Dynamic Rating	Basic Static Rating
	inch mm	inch mm	inch mm	inch mm	inch mm	inch mm	inch mm	lb kg	lb/N	lb/N
T601	1.000 25.40	2.125 53.98	0.812 20.62	1.130 28.70	2.000 50.80	.220 5.59	.031 .79	.5 .2	10,550 47,260	18,760 84,040
T602	1.062 26.97	2.125 53.98	0.812 20.62	1.130 28.70	2.000 50.80	.220 5.59	.031 .79	.5 .2	10,550 47,260	18,760 84,040
T603	1.125 28.58	2.250 57.15	0.812 20.62	1.250 31.75	2.150 54.61	.220 5.59	.031 .79	.6 .3	12,140 54,390	25,540 114,420
T604	1.187 30.15	2.250 57.15	0.812 20.62	1.250 31.75	2.150 54.61	.220 5.59	.031 .79	.6 .3	12,140 54,390	25,540 114,420
T605	1.250 31.75	2.375 60.33	0.812 20.62	1.430 36.32	2.310 58.67	.220 5.59	.031 .79	.6 .3	13,280 59,490	28,380 127,140
T606	1.312 33.32	2.375 60.33	0.812 20.62	1.430 36.32	2.310 58.67	.220 5.59	.031 .79	.6 .3	13,280 59,490	28,380 127,140
T607	1.375 34.93	2.875 73.03	0.812 20.62	1.630 41.40	2.790 70.87	.220 5.59	.031 .79	1.0 .4	17,470 78,270	47,800 214,140
T608	1.437 36.50	2.875 73.03	0.812 20.62	1.630 41.40	2.790 70.87	.220 5.59	.031 .79	1.0 .4	17,470 78,270	47,800 214,140
T609	1.500 38.10	3.000 76.20	0.812 20.62	1.750 44.45	2.900 73.66	.220 5.59	.031 .79	1.0 .4	18,730 83,910	52,140 233,590
T610	1.562 39.67	3.000 76.20	0.812 20.62	1.750 44.45	2.900 73.66	.220 5.59	.031 .79	1.0 .4	18,730 83,910	52,140 233,590
T611	1.625 41.28	3.250 82.55	1.000 25.40	1.880 47.75	3.150 80.01	.250 6.35	.062 1.57	1.5 .7	25,620 114,780	67,380 301,860
T612	1.687 42.85	3.250 82.55	1.000 25.40	1.880 47.75	3.150 80.01	.250 6.35	.062 1.57	1.5 .7	25,620 114,780	67,380 301,860
T613	1.750 44.45	3.375 85.73	1.000 25.40	2.030 51.56	3.300 83.82	.250 6.35	.062 1.57	1.6 .7	27,670 123,960	74,120 332,060
T614	1.812 46.02	3.375 85.73	1.000 25.40	2.030 51.56	3.300 83.82	.250 6.35	.062 1.57	1.6 .7	27,670 123,960	74,120 332,060
T615	1.875 47.63	3.500 88.90	1.000 25.40	2.130 54.10	3.410 86.61	.250 6.35	.062 1.57	1.7 .8	27,760 124,360	74,120 332,060
T616	1.937 49.20	3.500 88.90	1.000 25.40	2.130 54.10	3.410 86.61	.250 6.35	.062 1.57	1.6 .7	27,760 124,360	74,120 332,060
T617	2.000 50.80	3.625 92.08	1.000 25.40	2.190 55.63	3.500 88.90	.250 6.35	.062 1.57	1.7 .8	27,870 124,860	74,120 332,060
T618	2.125 53.98	3.750 95.25	1.000 25.40	2.380 60.45	3.650 92.71	.250 6.35	.062 1.57	1.8 .8	28,740 128,760	80,850 362,210
T619	2.250 57.15	3.875 98.43	1.000 25.40	2.440 61.98	3.750 95.25	.250 6.35	.062 1.57	1.9 .9	32,030 143,490	87,590 392,400

Metric dimensions for reference only.
For tolerances see pages F-41 to F-42.
Not all parts are available from stock. Please contact customer service for availability (800) 626-2120.
For more information on bearing capabilities outside of our standard offering, please contact Application Engineering (800) 626-2093.

Basic Construction Type: Standard Cylindrical Roller Thrust Or Aligning Type Bearing

Rolling Elements: Crowned Cylindrical Rollers With Sphered Ends

Bearing Material: Through Hardened Or Case Carburized Bearing Grade Steel

Series: Medium Duty (600), Heavy Duty (700), Or Metric

Retainer Types: Machined Brass With Steel Retaining Ring

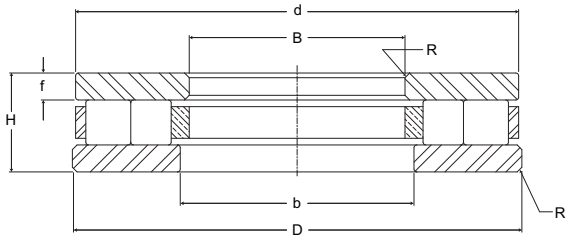

Cylindrical Roller Thrust Bearings

Part No.	B	D	H	b	d	f	R	Bearing Weight	C	Co
	Bore	Outside Diameter	Height	Internal Dimensions			Housing & Shaft Fillet		Basic Dynamic Rating	Basic Static Rating
	inch mm	inch mm	inch mm	inch mm	inch mm	inch mm	inch mm	lb kg	lb/N	lb/N
T620	2.375 60.33	4.000 101.60	1.000 25.40	2.630 66.80	3.900 99.06	.250 6.35	.062 1.57	2.0 .9	32,250 144,480	87,590 392,400
T621	2.500 63.50	4.125 104.78	1.000 25.40	2.670 67.82	4.000 101.60	.250 6.35	.062 1.57	2.1 1.0	34,180 153,130	94,330 422,600
T622	2.625 66.68	4.343 110.31	1.000 25.40	2.880 73.15	4.220 107.19	.250 6.35	.062 1.57	2.3 1.0	36,150 161,950	101,070 452,790
T623	2.750 69.85	4.468 113.49	1.000 25.40	3.060 77.72	4.340 110.24	.250 6.35	.062 1.57	2.4 1.1	38,350 171,810	107,800 482,940
T624	3.000 76.20	4.718 119.84	1.000 25.40	3.250 82.55	4.590 116.59	.250 6.35	.062 1.57	2.6 1.2	40,510 181,480	114,540 513,140
T625	3.250 82.55	4.968 126.19	1.000 25.40	3.500 88.90	4.840 122.94	.250 6.35	.062 1.57	2.7 1.2	40,770 182,650	114,540 513,140
T626	3.500 88.90	5.218 132.54	1.000 25.40	3.750 95.25	5.090 129.29	.250 6.35	.062 1.57	2.9 1.3	44,350 198,690	128,020 573,530
T727	2.000 50.80	6.000 152.40	1.375 34.93	2.250 57.15	5.880 149.35	.380 9.65	.062 1.57	8.6 3.9	77,500 347,200	295,900 1,325,630
T728	2.000 50.80	7.000 177.80	1.375 34.93	2.250 57.15	6.880 174.75	.380 9.65	.062 1.57	11.7 5.3	105,600 473,090	363,600 1,628,930
T729	2.000 50.80	8.000 203.20	1.375 34.93	2.250 57.15	7.880 200.15	.380 9.65	.062 1.57	16.0 7.3	111,900 501,310	460,200 2,061,700
T730	3.000 76.20	6.000 152.40	1.375 34.93	3.250 82.55	5.880 149.35	.380 9.65	.062 1.57	7.3 3.3	82,200 368,260	268,000 1,200,640
T731	3.000 76.20	7.000 177.80	1.375 34.93	3.250 82.55	6.880 174.75	.380 9.65	.062 1.57	10.8 4.9	98,800 442,620	365,800 1,638,780
T732	3.000 76.20	8.000 203.20	1.375 34.93	3.250 82.55	7.880 200.15	.380 9.65	.062 1.57	14.7 6.7	126,200 565,380	494,500 2,215,360
T733	3.000 76.20	9.000 228.60	1.375 34.93	3.250 82.55	8.880 225.55	.380 9.65	.062 1.57	19.2 8.7	147,500 660,800	642,800 2,879,740
T734	4.000 101.60	7.000 177.80	1.750 44.45	4.250 107.95	6.880 174.75	.500 12.70	.062 1.57	11.4 5.2	111,100 497,730	320,500 1,435,840
T735	4.000 101.60	8.000 203.20	1.750 44.45	4.250 107.95	7.880 200.15	.500 12.70	.062 1.57	16.6 7.6	132,200 592,260	454,200 2,034,820
T736	4.000 101.60	9.000 228.60	1.750 44.45	4.250 107.95	8.880 225.55	.500 12.70	.062 1.57	22.4 10.2	158,400 709,630	658,100 2,948,290
T737	4.000 101.60	10.000 254.00	1.750 44.45	4.250 107.95	9.880 250.95	.500 12.70	.062 1.57	29.0 13.2	192,200 861,060	777,800 3,484,540

Basic Construction Type: Standard Cylindrical Roller Thrust Or Aligning Type Bearing

Rolling Elements: Crowned Cylindrical Rollers With Sphered Ends

Bearing Material: Through Hardened Or Case Carburized Bearing Grade Steel

Series: Medium Duty (600), Heavy Duty (700), Or Metric

Retainer Types: Machined Brass With Steel Retaining Ring

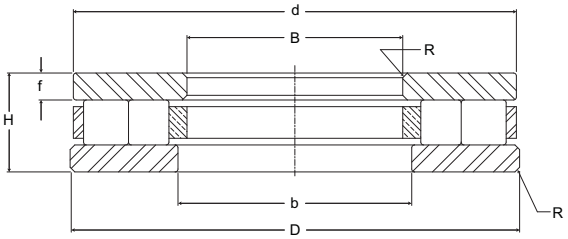

Cylindrical Roller Thrust Bearings (continued)

Part No.	B	D	H	b	d	f	R	Bearing Weight	C	Co
	Bore	Outside Diameter	Height	Internal Dimensions			Housing & Shaft Fillet		Basic Dynamic Rating	Basic Static Rating
	inch mm	inch mm	inch mm	inch mm	inch mm	inch mm	inch mm	lb kg	lb/N	lb/N
T738	5.000 127.00	8.000 203.20	1.750 44.45	5.250 133.35	7.880 200.15	.500 12.70	.062 1.57	13.5 6.1	111,000 497,280	419,400 1,878,910
T739	5.000 127.00	9.000 228.60	1.750 44.45	5.250 133.35	8.880 225.55	.500 12.70	.062 1.57	19.5 8.8	162,000 725,760	631,800 2,830,460
T740	5.000 127.00	10.000 254.00	2.000 50.80	5.250 133.35	9.880 250.95	.560 14.22	.125 3.18	30.0 13.6	205,100 918,850	703,300 3,150,780
T741	5.000 127.00	11.000 279.40	2.000 50.80	5.250 133.35	10.880 276.35	.560 14.22	.125 3.18	38.0 17.2	231,200 1,035,780	870,900 3,901,630
T742	5.000 127.00	12.000 304.80	2.000 50.80	5.250 133.35	11.880 301.75	.560 14.22	.125 3.18	47.0 21.3	276,100 1,236,930	1,144,000 5,125,120
T743	6.000 152.40	9.000 228.60	2.000 50.80	6.380 162.05	8.750 222.25	.560 14.22	.125 3.18	18.0 8.1	130,600 585,090	450,100 2,016,450
T744	6.000 152.40	10.000 254.00	2.000 50.80	6.380 162.05	9.750 247.65	.560 14.22	.125 3.18	25.0 11.3	190,300 852,540	648,600 2,905,730
T745	6.000 152.40	11.000 279.40	2.000 50.80	6.380 162.05	10.750 273.05	.560 14.22	.125 3.18	34.0 15.4	233,400 1,045,630	929,900 4,165,950
T746	6.000 152.40	12.000 304.80	2.000 50.80	6.380 162.05	11.750 298.45	.560 14.22	.125 3.18	42.0 19.1	267,000 1,196,160	1,097,100 4,915,010
T747	7.000 177.80	10.000 254.00	2.000 50.80	7.380 187.45	9.750 247.65	.560 14.22	.125 3.18	20.0 4.1	154,500 692,160	550,100 2,464,450
T748	7.000 177.80	11.000 279.40	2.000 50.80	7.380 187.45	10.750 273.05	.560 14.22	.125 3.18	28.0 12.7	213,600 956,930	790,800 3,542,780
T749	7.000 177.80	12.000 304.80	2.000 50.80	7.380 187.45	11.750 298.45	.560 14.22	.125 3.18	40.0 18.1	251,600 1,127,170	1,022,900 4,582,590
T750	7.000 177.80	14.000 355.60	3.000 76.20	7.380 187.45	13.750 349.25	.880 22.35	.250 6.35	88.0 39.9	436,200 1,954,180	1,598,200 7,159,940
T751	8.000 203.20	12.000 304.80	3.000 76.20	8.380 212.85	11.750 298.45	.880 22.35	.250 6.35	48.0 21.7	258,000 1,155,840	945,400 4,235,390
T752	7.000 177.80	14.000 355.60	3.000 76.20	8.380 212.85	13.750 349.25	.880 22.35	.250 6.35	78.0 35.4	397,500 1,780,800	1,487,900 6,665,790
T753	7.000 177.80	16.000 406.40	3.000 76.20	8.380 212.85	15.750 400.05	.880 22.35	.250 6.35	114.0 51.7	516,400 2,313,470	2,072,500 9,284,800
T754	10.000 254.00	16.000 406.40	3.000 76.20	10.380 263.65	15.750 400.05	.880 22.35	.250 6.35	88.0 39.9	437,800 1,961,340	1,747,200 7,827,460
T755	10.000 254.00	18.000 457.20	3.750 95.25	10.380 263.65	17.750 450.85	1.130 28.70	.250 6.35	168.0 76.2	614,200 2,751,620	2,697,600 12,085,250
T756	10.000 254.00	20.000 508.00	3.750 95.25	10.380 263.65	19.750 501.65	1.130 28.70	.250 6.35	225.0 102.1	766,000 3,431,680	3,250,900 14,564,030

Metric dimensions for reference only.
Not all parts are available from stock. Please contact customer service for availability (800) 626-2120.
For more information on bearing capabilities outside of our standard offering, please contact Application Engineering (800) 626-2093.

Basic Construction Type: Standard Cylindrical Roller Thrust Or Aligning Type Bearing

Rolling Elements: Crowned Cylindrical Rollers With Sphered Ends

Bearing Material: Through Hardened Or Case Carburized Bearing Grade Steel

Series: Medium Duty (600), Heavy Duty (700), Or Metric

Retainer Types: Centrifugally Cast Brass

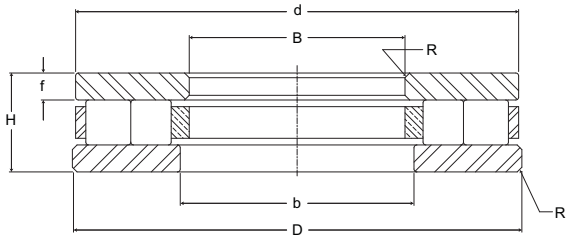

Cylindrical Roller Thrust Bearings (continued)

Part No.	B	D	H	b	d	f	R	Bearing Weight	C	Co
	Bore	Outside Diameter	Height	Internal Dimensions			Housing & Shaft Fillet		Basic Dynamic Rating	Basic Static Rating
	inch mm	inch mm	inch mm	inch mm	inch mm	inch mm	inch mm	lb kg	lb/N	lb/N
T757	12.000 304.80	18.000 457.20	3.750 95.25	12.500 317.50	17.750 450.85	1.130 28.70	.250 6.35	134.0 60.8	469,200 2,102,020	2,031,900 9,102,910
T758	12.000 304.80	20.000 508.00	4.500 114.30	12.500 317.50	19.750 501.65	1.380 35.05	.250 6.35	222.0 100.0	724,600 3,246,210	2,937,800 13,161,340
T759	12.000 304.80	24.000 609.60	4.500 114.30	12.500 317.50	23.750 603.25	1.380 35.05	.250 6.35	372.0 168.7	1,045,900 4,685,630	4,688,000 21,002,240
T760	14.000 355.60	20.000 508.00	3.750 95.25	14.500 368.30	19.750 501.65	1.130 28.70	.250 6.35	152.0 68.9	540,000 2,419,200	2,385,200 10,685,700
T761	14.000 355.60	22.000 558.80	3.750 95.25	14.500 368.30	21.750 552.45	1.130 28.70	.250 6.35	215.0 97.5	732,000 3,279,360	3,339,900 14,962,750
T762	14.000 355.60	24.000 609.60	3.750 95.25	14.500 368.30	23.750 603.25	1.130 28.70	.250 6.35	285.0 129.2	858,100 3,844,290	4,280,300 19,175,740
T763	16.000 406.40	22.000 558.80	4.500 114.30	16.500 419.10	21.500 546.10	1.380 35.05	.250 6.35	205.0 92.9	609,800 2,731,900	2,362,800 10,585,340
T764	16.000 406.40	24.000 609.60	4.500 114.30	16.500 419.10	23.500 596.90	1.380 35.05	.250 6.35	290.0 131.5	878,700 3,936,580	3,819,100 17,109,570
T765	16.000 406.40	26.000 660.40	4.500 114.30	16.500 419.10	25.500 647.70	1.380 35.05	.250 6.35	238.0 107.9	1,041,500 4,665,920	4,916,300 22,025,020
T766	18.000 457.20	26.000 660.40	5.000 127.00	18.750 476.25	25.500 647.70	1.500 38.10	.250 6.35	350.0 158.7	945,500 4,235,840	3,937,500 17,640,000
T767	18.000 457.20	28.000 711.20	5.000 127.00	18.750 476.25	27.500 698.50	1.500 38.10	.250 6.35	460.0 208.6	1,571,600 7,040,770	5,393,500 24,162,880
T768	18.000 457.20	30.000 762.00	5.500 139.70	18.750 476.25	29.500 749.30	1.500 38.10	.250 6.35	630.0 285.7	1,571,600 7,040,770	6,753,800 30,257,020
T769	20.000 508.00	28.000 711.20	5.500 139.70	21.250 539.75	27.500 698.50	1.500 38.10	.250 6.35	420.0 190.5	1,091,700 4,890,820	4,407,200 19,744,260
T770	20.000 508.00	30.000 762.00	5.500 139.70	21.250 539.75	29.500 749.30	1.500 38.10	.250 6.35	550.0 249.5	1,544,800 6,920,700	6,885,500 30,847,040
T771	20.000 508.00	32.000 812.80	6.000 152.40	21.250 539.75	31.500 800.10	1.750 44.45	.250 6.35	750.0 340.2	1,712,000 7,669,760	7,850,000 35,168,000
T772	22.000 558.80	30.000 762.00	5.500 139.70	23.250 590.55	29.500 749.30	1.500 38.10	.250 6.35	450.0 204.1	1,161,900 5,205,310	4,774,500 21,389,760
T773	22.000 558.80	32.000 812.80	5.500 139.70	23.250 590.55	31.500 800.10	1.500 38.10	.250 6.35	590.0 267.6	1,431,000 6,410,880	6,153,200 27,566,340
T744	22.000 558.80	34.000 863.60	6.000 152.40	23.250 590.55	33.500 850.90	1.750 44.45	.250 6.35	800.0 362.8	1,742,200 7,805,060	7,981,700 35,758,020

Basic Construction Type: Standard Cylindrical Roller Thrust Or Aligning Type Bearing

Rolling Elements: Crowned Cylindrical Rollers With Sphered Ends

Bearing Material: Through Hardened Or Case Carburized Bearing Grade Steel

Series: Medium Duty (600), Heavy Duty (700), Or Metric

Retainer Types: Machined Brass With Steel Retaining Ring

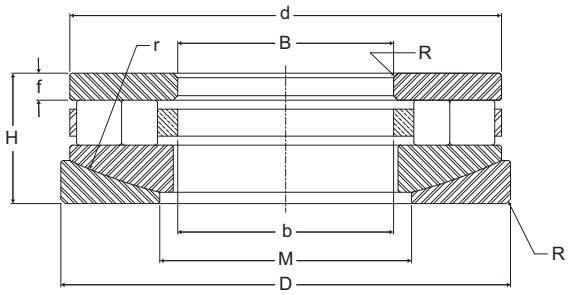

Self Aligning Cylindrical Roller Thrust Bearings

Part No.	B	D	H	b	d	f	m	f	R	Bearing Weight	C	Co
	Bore	Outside Diameter	Height	Internal Dimensions					Housing & Shaft Fillet		Basic Dynamic Rating	Basic Static Rating
	inch mm	inch mm	inch mm	inch mm	inch mm	inch mm	inch mm	inch mm	inch mm	lb kg	lb/N	lb/N
AT601	1.000 25.40	2.250 57.15	1.062 26.97	1.130 28.70	2.000 50.80	.220 5.59	1.310 33.27	1.500 38.10	.031 .79	.7 .3	10,550 47,260	18,760 84,040
AT602	1.062 26.97	2.250 57.15	1.062 26.97	1.130 28.70	2.000 50.80	.220 5.59	1.310 33.27	1.500 38.10	.031 .79	.7 .3	10,550 47,260	18,760 84,040
AT603	1.125 28.58	2.375 60.33	1.062 26.97	1.250 31.75	2.150 54.61	.220 5.59	1.440 36.58	1.750 44.45	.031 .79	.8 .4	12,140 54,390	25,540 114,420
AT604	1.187 30.15	2.375 60.33	1.062 26.97	1.250 31.75	2.150 54.61	.220 5.59	1.440 36.58	1.750 44.45	.031 .79	.70 .3	12,140 54,390	25,540 114,420
AT605	1.250 31.75	2.500 63.50	1.062 26.97	1.380 35.05	2.310 58.67	.220 5.59	1.500 38.10	1.875 47.63	.031 .79	.8 .4	13,280 59,490	28,380 127,140
AT606	1.312 33.32	2.500 63.50	1.062 26.97	1.380 35.05	2.310 58.67	.220 5.59	1.630 41.40	1.875 47.63	.031 .79	.8 .4	13,280 59,490	28,380 127,140
AT607	1.375 34.93	3.000 76.20	1.062 26.97	1.500 38.10	2.790 70.87	.220 5.59	1.810 45.97	2.750 69.85	.031 .79	1.3 .6	17,470 78,270	47,800 214,140
AT608	1.437 36.50	3.000 76.20	1.062 26.97	1.500 38.10	2.790 70.87	.220 5.59	1.810 45.97	2.750 69.85	.031 .79	1.3 .6	17,470 78,270	47,800 214,140
AT609	1.500 38.10	3.125 79.38	1.062 26.97	1.630 41.40	2.900 73.66	.220 5.59	1.880 47.75	3.000 76.20	.031 .79	1.4 .6	18,730 83,910	52,140 233,590
AT610	1.562 39.67	3.125 79.38	1.062 26.97	1.630 41.40	2.900 73.66	.220 5.59	1.880 47.75	3.000 76.20	.031 .79	1.4 .6	18,730 83,910	52,140 233,590
AT611	1.625 41.28	3.375 85.73	1.312 33.32	1.750 44.45	3.150 80.01	.250 6.35	2.000 50.80	3.000 76.20	.062 1.57	2 .9	25,620 114,780	67,380 301,860
AT612	1.687 42.85	3.375 85.73	1.312 33.32	1.750 44.45	3.150 80.01	.250 6.35	2.000 50.80	3.000 76.20	.062 1.57	2 .9	25,620 114,780	67,380 301,860
AT613	1.750 44.45	3.500 88.90	1.312 33.32	1.880 47.75	3.300 83.82	.250 6.35	2.060 52.32	3.250 82.55	.062 1.57	2 .9	27,670 123,960	74,120 332,060
AT614	1.812 46.02	3.500 88.90	1.312 33.32	1.880 47.75	3.300 83.82	.250 6.35	2.060 52.32	3.250 82.55	.062 1.57	2 .9	27,670 123,960	74,120 332,060
AT615	1.875 47.63	3.625 92.08	1.312 33.32	2.000 50.80	3.410 86.61	.250 6.35	2.250 57.15	3.250 82.55	.062 1.57	2.2 1.0	27,760 124,360	74,120 332,060
AT616	1.937 49.20	3.625 92.08	1.312 33.32	2.000 50.80	3.410 86.61	.250 6.35	2.250 57.15	3.250 82.55	.062 1.57	2.2 1.0	27,760 124,360	74,120 332,060
AT617	2.000 50.80	3.750 95.25	1.312 33.32	2.060 52.32	3.500 88.90	.250 6.35	2.480 62.99	3.250 82.55	.062 1.57	2.3 1.0	27,870 124,860	74,120 332,060
AT618	2.125 53.98	3.875 98.43	1.312 33.32	2.190 55.63	3.650 92.71	.250 6.35	2.500 63.50	3.500 88.90	.062 1.57	2.3 1.0	28,740 128,760	80,850 362,210
AT619	2.250 57.15	4.000 101.60	1.312 33.32	2.310 58.67	3.750 95.25	.250 6.35	2.690 68.33	3.500 88.90	.062 1.57	2.5 1.1	32,030 143,490	87,590 392,400

Metric dimensions for reference only.
Not all parts are available from stock. Please contact customer service for availability (800) 626-2120.
For more information on bearing capabilities outside of our standard offering, please contact Application Engineering (800) 626-2093.

Basic Construction Type: Standard Cylindrical Roller Thrust Or Aligning Type Bearing

Rolling Elements: Crowned Cylindrical Rollers With Sphered Ends

Bearing Material: Through Hardened Or Case Carburized Bearing Grade Steel

Series: Medium Duty (600), Heavy Duty (700), Or Metric

Retainer Types: Machined Brass With Steel Retaining Ring

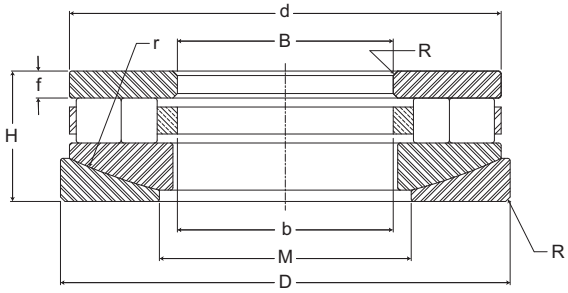

Self Aligning Cylindrical Roller Thrust Bearings

Part No.	B	D	H	b	d	f	m	f	R	Bearing Weight	C	Co
	Bore	Outside Diameter	Height	Internal Dimensions					Housing & Shaft Fillet		Basic Dynamic Rating	Basic Static Rating
	inch mm	inch mm	inch mm	inch mm	inch mm	inch mm	inch mm	inch mm	inch mm	lb kg	lb/N	lb/N
AT620	2.375 60.33	4.125 104.78	1.312 33.32	2.440 61.98	3.900 99.06	.250 6.35	2.880 73.15	3.500 88.90	.062 1.57	2.6 1.2	32,250 144,480	87,590 392,400
AT621	2.500 63.50	4.250 107.95	1.312 33.32	2.560 65.02	4.000 101.60	.250 6.35	2.880 73.15	4.000 101.60	.062 1.57	2.7 1.2	34,180 153,130	94,330 422,600
AT622	2.625 66.68	4.530 115.06	1.312 33.32	2.690 68.33	4.220 107.19	.250 6.35	3.130 79.50	3.750 95.25	.062 1.57	3 1.4	36,150 161,950	101,070 452,790
AT623	2.750 69.85	4.655 118.24	1.312 33.32	2.810 71.37	4.340 110.24	.250 6.35	3.130 79.50	4.250 107.95	.062 1.57	3.2 1.5	38,350 171,810	107,800 482,940
AT624	3.000 76.20	4.968 126.19	1.312 33.32	3.060 77.72	4.590 116.59	.250 6.35	3.500 88.90	4.500 114.30	.062 1.57	3.4 1.5	40,510 181,480	114,540 513,140
AT625	3.250 82.55	5.218 132.54	1.312 33.32	3.340 84.84	4.840 122.94	.250 6.35	3.810 96.77	4.750 120.65	.062 1.57	3.6 1.6	40,770 182,650	114,540 513,140
AT626	3.500 88.90	5.468 138.89	1.312 33.32	3.590 91.19	5.090 129.29	.250 6.35	4.060 103.12	5.000 127.00	.062 1.57	3.8 1.7	44,350 198,690	128,020 573,530
AT727	2.000 50.80	6.312 160.32	1.182 30.02	2.060 52.32	5.880 149.35	.380 9.65	3.380 85.85	7.500 190.50	.062 1.57	11.5 5.2	77,500 347,200	295,900 1,325,630
AT728	2.000 50.80	7.312 185.72	1.182 30.02	2.060 52.32	6.880 174.75	.380 9.65	4.250 107.95	9.500 241.30	.062 1.57	15.8 7.2	105,600 473,090	363,600 1,628,930
AT729	2.000 50.80	8.312 211.12	1.182 30.02	2.060 52.32	7.880 200.15	.380 9.65	5.000 127.00	12.000 304.80	.062 1.57	21.5 9.7	111,900 501,310	460,200 2,061,700
AT730	3.000 76.20	6.312 160.32	1.182 30.02	3.060 77.72	5.880 149.35	.380 9.65	4.000 101.60	6.000 152.40	.062 1.57	9 4.1	82,200 368,260	268,000 1,200,640
AT731	3.000 76.20	7.312 185.72	1.182 30.02	3.060 77.72	6.880 174.75	.380 9.65	4.380 111.25	9.500 241.30	.062 1.57	14 6.4	98,800 442,620	365,800 1,638,780
AT732	3.000 76.20	8.312 211.12	1.182 30.02	3.060 77.72	7.880 200.15	.380 9.65	5.250 133.35	12.000 304.80	.062 1.57	20 9.1	126,200 565,380	494,500 2,215,360
AT733	3.000 76.20	9.312 236.52	1.182 30.02	3.060 77.72	8.880 225.55	.380 9.65	6.250 158.75	14.000 355.60	.062 1.57	26 11.8	147,500 660,800	642,800 2,879,740
AT734	4.000 101.60	7.375 187.33	2.312 58.72	4.090 103.89	6.880 174.75	.500 12.70	5.000 127.00	6.375 161.93	.062 1.57	15 6.8	111,100 497,730	320,500 1,435,840
AT735	4.000 101.60	8.375 212.73	2.312 58.72	4.090 103.89	7.880 200.15	.500 12.70	5.250 133.35	8.500 215.90	.062 1.57	22 9.9	132,200 592,260	454,200 2,034,820
AT736	4.000 101.60	9.375 238.13	2.312 58.72	4.090 103.89	8.880 225.55	.500 12.70	5.880 149.35	10.000 254.00	.062 1.57	30 13.6	158,400 709,630	658,100 2,948,290
AT737	4.000 101.60	10.500 266.70	2.312 58.72	4.090 103.89	9.880 250.95	.500 12.70	6.500 165.10	14.000 355.60	.062 1.57	39 17.7	192,200 861,060	777,800 3,484,540

Basic Construction Type: Standard Cylindrical Roller Thrust Or Aligning Type Bearing

Rolling Elements: Crowned Cylindrical Rollers With Sphered Ends

Bearing Material: Through Hardened Or Case Carburized Bearing Grade Steel

Series: Medium Duty (600), Heavy Duty (700), Or Metric

Retainer Types: Machined Brass With Steel Retaining Ring

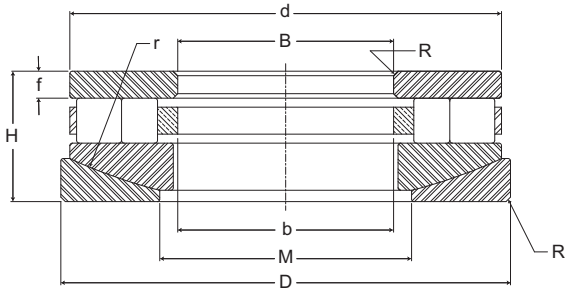

Self Aligning Cylindrical Roller Thrust Bearings (continued)

Part No.	B	D	H	b	d	f	m	f	R	Bearing Weight	C	Co
	Bore	Outside Diameter	Height	Internal Dimensions					Housing & Shaft Fillet		Basic Dynamic Rating	Basic Static Rating
	inch mm	inch mm	inch mm	inch mm	inch mm	inch mm	inch mm	inch mm	inch mm	lb kg	lb/N	lb/N
AT738	5.000 127.00	8.500 215.90	2.312 58.72	5.130 130.30	7.880 200.15	.500 12.70	6.000 152.40	7.375 187.33	.062 1.57	18 8.1	111,000 497,280	419,400 1,878,910
AT739	5.000 127.00	9.500 241.30	2.312 58.72	5.130 130.30	8.880 225.55	.500 12.70	6.130 155.70	10.500 266.70	.062 1.57	26 11.8	162,000 725,760	631,800 2,830,460
AT740	5.000 127.00	10.500 266.70	2.625 66.68	5.130 130.30	9.880 250.95	.560 14.22	6.250 158.75	12.750 323.85	.125 3.18	39 17.6	205,100 918,850	703,300 3,150,780
AT741	5.000 127.00	11.500 292.10	2.625 66.68	5.130 130.30	10.880 276.35	.560 14.22	7.000 177.80	16.000 406.40	.125 3.18	50 22.7	231,200 1,035,780	870,900 3,901,630
AT742	5.000 127.00	12.500 317.50	2.625 66.68	5.130 130.30	11.880 301.75	.560 14.22	7.250 184.15	19.750 501.65	.125 3.18	63 28.6	276,100 1,236,930	1,144,000 5,125,120
AT743	6.000 152.40	9.500 241.30	2.625 66.68	6.130 155.70	8.750 222.25	.560 14.22	7.250 184.15	6.750 171.45	.125 3.18	23 10.4	130,600 585,090	450,100 2,016,450
AT744	6.000 152.40	10.500 266.70	2.625 66.68	6.130 155.70	9.750 247.65	.560 14.22	7.380 187.45	9.500 241.30	.125 3.18	33 14.9	190,300 852,540	648,600 2,905,730
AT745	6.000 152.40	11.500 292.10	2.625 66.68	6.130 155.70	10.750 273.05	.560 14.22	7.380 187.45	13.500 342.90	.125 3.18	44 19.9	233,400 1,045,630	929,900 4,165,950
AT746	6.000 152.40	12.500 317.50	2.625 66.68	6.130 155.70	11.750 298.45	.560 14.22	7.500 190.50	17.000 431.80	.125 3.18	57 25.8	267,000 1,196,160	1,097,100 4,915,010
AT747	7.000 177.80	10.500 266.70	2.625 66.68	7.130 181.10	9.750 247.65	.560 14.22	8.130 206.50	8.125 206.38	.125 3.18	26 11.7	154,500 692,160	550,100 2,464,450
AT748	7.000 177.80	11.500 292.10	2.625 66.68	7.130 181.10	10.750 273.05	.560 14.22	8.250 209.55	11.500 292.10	.125 3.18	37 16.7	213,600 956,930	790,800 3,542,780
AT749	7.000 177.80	12.500 317.50	2.625 66.68	7.130 181.10	11.750 298.45	.560 14.22	8.250 209.55	15.375 390.53	.125 3.18	50 22.7	251,600 1,127,170	1,022,900 4,582,590
AT750	7.000 177.80	14.750 374.65	4.000 101.60	7.190 182.63	13.750 349.25	.880 22.35	9.000 228.60	15.375 390.53	.250 6.35	118 53.5	436,200 1,954,180	1,598,200 7,159,940
AT751	8.000 203.20	12.750 323.85	4.000 101.60	8.190 208.03	11.750 298.45	.880 22.35	9.380 238.25	8.500 215.90	.250 6.35	63 28.6	258,000 1,155,840	945,400 4,235,390
AT752	8.000 203.20	14.750 374.65	4.000 101.60	8.190 208.03	13.750 349.25	.880 22.35	10.380 263.65	12.000 304.80	.250 6.35	106 48.1	397,500 1,780,800	1,487,900 6,665,790
AT753	8.000 203.20	16.875 428.63	4.000 101.60	8.250 209.55	15.750 400.05	.880 22.35	10.500 266.70	19.500 495.30	.250 6.35	154 69.6	516,400 2,313,470	2,072,500 9,284,800
AT754	10.000 254.00	16.875 428.63	4.000 101.60	10.250 260.35	17.750 450.85	.880 22.35	11.500 292.10	16.750 425.45	.250 6.35	120 54.4	437,800 1,961,340	1,747,200 7,827,460
AT755	10.000 254.00	18.875 479.43	5.000 127.00	10.250 260.35	17.750 450.85	1.130 28.70	12.000 304.80	20.000 508.00	.250 6.35	225 102.1	614,200 2,751,620	2,697,600 12,085,250
AT756	10.000 254.00	20.875 530.23	5.000 127.00	10.250 260.35	19.750 501.65	1.130 28.70	13.250 336.55	24.000 609.60	.250 6.35	300 136.1	766,000 3,431,680	3,250,900 14,564,030

Metric dimensions for reference only.
Not all parts are available from stock. Please contact customer service for availability (800) 626-2120.
For more information on bearing capabilities outside of our standard offering, please contact Application Engineering (800) 626-2093.

Basic Construction Type: Standard Cylindrical Roller Thrust Or Aligning Type Bearing

Rolling Elements: Crowned Cylindrical Rollers With Sphered Ends

Bearing Material: Through Hardened Or Case Carburized Bearing Grade Steel

Series: Medium Duty (600), Heavy Duty (700), Or Metric

Retainer Types: Machined Brass With Steel Retaining Ring

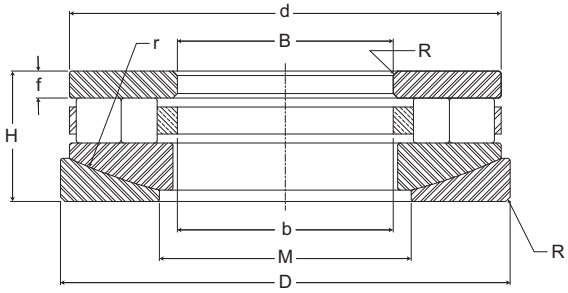

Self Aligning Cylindrical Roller Thrust Bearings (continued)

Part No.	B	D	H	b	d	f	m	f	R	Bearing Weight	C	Co
	Bore	Outside Diameter	Height	Internal Dimensions					Housing & Shaft Fillet		Basic Dynamic Rating	Basic Static Rating
	inch mm	inch mm	inch mm	inch mm	inch mm	inch mm	inch mm	inch mm	inch mm	lb kg	lb/N	lb/N
AT757	12.000 304.80	18.875 479.43	5.000 127.00	12.250 311.15	17.750 450.85	1.130 28.70	13.630 346.20	15.375 390.53	.250 6.35	180 81.6	469,200 2,102,020	2,031,900 9,102,910
AT758	12.000 304.80	20.875 530.23	6.000 152.40	12.250 311.15	19.750 501.65	1.380 35.05	13.880 352.55	20.000 508.00	.250 6.35	300 136.1	724,600 3,246,210	2,937,800 13,161,340
AT759	12.000 304.80	24.875 631.83	6.000 152.40	12.250 311.15	23.750 603.25	1.380 35.05	16.000 406.40	28.500 723.90	.250 6.35	510 231.3	1,045,900 4,685,630	4,688,000 21,002,240
AT760	14.000 355.60	20.875 530.23	4.875 123.83	14.250 361.95	19.750 501.65	1.130 28.70	15.500 393.70	19.500 495.30	.250 6.35	200 90.7	540,000 2,419,200	2,385,200 10,685,700
AT761	14.000 355.60	22.875 581.03	4.875 123.83	14.250 361.95	21.750 552.45	1.130 28.70	15.500 393.70	28.500 723.90	.250 6.35	280 127.0	732,000 3,279,360	3,339,900 14,962,750
AT762	14.000 355.60	24.875 631.83	4.875 123.83	14.250 361.95	23.750 603.25	1.130 28.70	16.380 416.05	36.125 917.58	.250 6.35	370 167.8	858,100 3,844,290	4,280,300 19,175,740
AT763	16.000 406.40	22.855 580.52	6.000 152.40	16.250 412.75	21.500 546.10	1.380 35.05	17.500 444.50	17.500 444.50	.250 6.35	270 122.5	609,800 2,731,900	2,362,800 10,585,340
AT764	16.000 406.40	25.000 635.00	6.000 152.40	16.250 412.75	23.500 596.90	1.380 35.05	18.000 457.20	23.500 596.90	.250 6.35	385 174.6	878,700 3,936,580	3,819,100 17,109,570
AT765	16.000 406.40	27.000 685.80	6.000 152.40	16.250 412.75	25.500 647.70	1.380 35.05	18.500 469.90	29.625 752.48	.250 6.35	510 231.3	1,041,500 4,665,920	4,916,300 22,025,020
AT766	18.000 457.20	27.000 685.80	6.750 171.45	18.380 466.85	25.500 647.70	1.500 38.10	19.500 495.30	23.500 596.90	.250 6.35	470 213.2	945,500 4,235,840	3,937,500 17,640,000
AT767	18.000 457.20	29.000 736.60	6.750 171.45	18.380 466.85	27.500 698.50	1.500 38.10	20.000 508.00	29.625 752.48	.250 6.35	620 281.2	1,185,800 5,312,380	5,393,500 24,162,880
AT768	18.000 457.20	31.000 787.40	7.250 184.15	18.380 466.85	29.500 749.30	1.500 38.10	20.630 524.00	36.125 917.58	.250 6.35	840 381.0	1,571,600 7,040,770	6,753,800 30,257,020
AT769	20.000 508.00	29.000 736.60	7.500 190.50	20.380 517.65	27.500 698.50	1.500 38.10	21.500 546.10	27.500 698.50	.250 6.35	787 356.9	1,091,700 4,890,820	4,407,200 19,744,260
AT770	20.000 508.00	31.000 787.40	7.500 190.50	20.380 517.65	27.500 698.50	1.500 38.10	21.500 546.10	27.500 698.50	.250 6.35	550 249.5	1,544,800 6,920,700	6,885,500 30,847,040
AT771	20.000 508.00	33.000 838.20	8.000 203.20	20.380 517.65	31.500 800.10	1.750 44.45	23.000 584.20	33.000 838.20	.250 6.35	940 426.4	1,714,000 7,678,720	7,850,000 35,168,000
AT772	22.000 558.80	31.000 787.40	7.500 190.50	22.380 568.45	29.500 749.30	1.500 38.10	23.000 584.20	24.625 625.48	.250 6.35	450 204.1	1,162,000 5,205,760	4,774,500 21,389,760
AT773	22.000 558.80	33.000 838.20	7.500 190.50	22.380 568.45	31.500 800.10	1.500 38.10	13.620 345.95	37.000 939.80	.250 6.35	621 281.7	1,431,000 6,410,880	6,153,200 27,566,340
AT774	22.000 558.80	35.000 889.00	8.000 203.20	22.380 568.45	33.500 850.90	1.750 44.45	24.880 631.95	37.000 939.80	.250 6.35	792 359.2	1,742,000 7,804,160	7,982,000 35,759,360

ROLLWAY® Cylindrical Thrust Bearings

Basic Construction Type: Standard Cylindrical Roller Thrust Bearing

Rolling Elements: Crowned Cylindrical Rollers With Sphered Ends

Bearing Material: Through Hardened Or Case Carburized Bearing Grade Steel

Series With Or Without Grease Fitting

Retainer Types: Machined Brass With Steel Retaining Ring

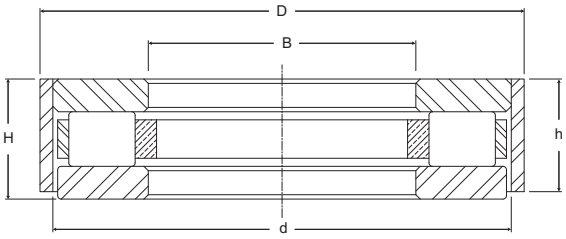

Crane Hook Thrust Bearings

Part No.		Designed Hook Shank	B	D		H	d	h	Bearing Weight	Basic Static Rating
			Bore	Outside Diameter		Height	Internal Dimensions			
Grease Fitting		inch mm	inch mm	inch mm	inch mm	inch mm	inch mm	inch mm	lb kg	lb/N
None	Installed			CT	WCT					
CT-11	WCT-11	1.625 41.28	1.640 41.66	3.093 78.56	3.343 84.91	.812 20.62	2.95 74.9	.69 17.5	1.4 .6	36,890 165,270
CT-16	WCT-16	1.938 49.21	1.952 49.58	3.468 88.09	3.593 91.26	.812 20.62	3.22 81.8	.69 17.5	1.4 .6	65,310 292,590
CT-17	WCT-17	2.000 50.80	2.015 51.18	3.937 100.00	4.000 101.60	1.000 25.40	3.60 91.4	.88 22.4	2.6 1.2	73,210 327,980
CT-19	WCT-19	2.250 57.15	2.265 57.53	4.000 101.60	4.250 107.95	1.000 25.40	3.86 98.0	.88 22.4	2.3 1.0	72,970 326,910
CT-20-C	WCT-20-C	2.250 57.15	2.265 57.53	4.250 107.95	4.375 111.13	1.000 25.40	3.98 101.1	.88 22.4	2.7 1.2	88,600 396,930
CT-23	WCT-23	2.750 69.85	2.765 70.23	4.750 120.65	4.843 123.01	1.000 25.40	4.45 113.0	.88 22.4	3.1 1.4	93,820 420,310
CT-24-A	WCT-24-A	2.750 69.85	2.765 70.23	4.875 123.83	5.156 130.96	1.250 31.75	4.76 120.9	1.13 28.7	4.3 1.9	121,300 543,420
CT-27-A	WCT-27-A	3.250 82.55	3.265 82.93	6.125 155.58	6.250 158.75	1.500 38.10	5.85 148.6	1.38 35.1	8.2 3.7	180,810 810,030
CT-27-C	WCT-27-C	3.250 82.55	3.265 82.93	6.187 157.15	6.375 161.93	1.750 44.45	5.97 151.6	1.63 41.4	9.0 4.1	212,960 954,060
CT-27-B	WCT-27-B	3.500 88.90	3.515 89.28	6.156 156.36	6.375 161.93	1.625 41.28	5.97 151.6	1.50 38.1	8.5 3.8	203,410 911,280
CT-28-A	WCT-28-A	3.500 88.90	3.515 89.28	6.750 171.45	6.937 176.20	1.625 41.28	6.54 166.1	1.50 38.1	11 4.9	245,110 1,098,090
CT-30-B	WCT-30-B	3.563 90.49	3.577 90.86	6.375 161.93	6.375 161.93	1.375 34.93	5.97 151.6	1.25 31.8	8.2 3.7	207,000 927,360
CT-34-A	WCT-34-A	3.750 95.25	3.765 95.63	7.125 180.98	7.250 184.15	1.875 47.63	6.86 174.2	1.75 44.5	15 6.8	288,080 1,290,600
CT-35-A	WCT-35-A	4.250 107.95	4.265 108.33	8.171 207.54	8.375 212.73	2.000 50.80	7.97 202.4	1.88 47.8	20 9.1	369,200 1,654,020

Metric dimensions for reference only.
Not all parts are available from stock. Please contact customer service for availability (800) 626-2120.
For more information on bearing capabilities outside of our standard offering, please contact Application Engineering (800) 626-2093.

Basic Construction Type: Standard Cylindrical Roller Thrust Bearing

Rolling Elements: Crowned Cylindrical Rollers With Sphered Ends

Bearing Material: Through Hardened Or Case Carburized Bearing Grade Steel

Series With Or Without Grease Fitting

Retainer Types: Machined Brass With Steel Retaining Ring

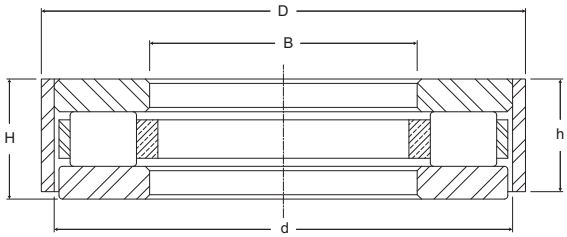

Crane Hook Thrust Bearings

Part No.		Designed Hook Shank	B	D		H	d	h	Bearing Weight	Basic Static Rating
			Bore	Outside Diameter		Height	Internal Dimensions			
Grease Fitting		inch mm	inch mm	inch mm	inch mm	inch mm	inch mm	inch mm	lb kg	lb/N
None	Installed			CT	WCT					
CT-38-A	WCT-38-A	4.500 114.30	4.515 114.68	8.125 206.38	8.312 211.12	2.000 50.80	7.91 200.9	1.88 47.8	20 9.1	390,910 1,751,280
CT-39-A	WCT-39-A	5.000 127.00	5.015 127.38	9.156 232.56	9.375 238.13	2.250 57.15	8.97 227.8	2.13 54.1	28 12.7	628,470 2,815,550
CT-44-A	WCT-44-A	5.500 139.70	5.515 140.08	10.500 266.70	10.500 266.70	2.500 63.50	10.10 256.5	2.38 60.5	41 18.6	633,000 2,835,840
CT-45-A	WCT-45-A	6.000 152.40	6.015 152.78	11.156 283.36	11.375 288.93	3.000 76.20	10.97 278.6	2.75 69.9	55 24.9	923,160 4,135,760
CT-45-B	WCT-45-B	5.563 141.29	5.577 141.66	11.500 292.10	11.500 292.10	2.000 50.80	10.97 278.6	1.88 47.6	42 19.1	858,000 3,843,840
CT-48	WCT-48	7.000 177.80	7.015 178.18	11.500 292.10	11.500 292.10	2.000 50.80	10.97 278.6	1.75 44.5	58 26.3	699,000 3,131,520
CT-49-A	WCT-49-A	6.813 173.04	6.827 173.41	12.750 323.85	12.750 323.85	2.500 63.50	12.34 313.4	2.38 60.5	61 27.7	1,004,880 4,501,860
CT-51	WCT-51	7.875 200.03	7.890 200.41	12.375 314.33	12.375 314.33	3.000 76.20	11.91 302.4	2.75 69.9	73 33.1	904,500 4,052,160
CT-52	WCT-52	8.438 214.31	8.454 214.73	14.500 368.30	14.500 368.30	3.000 76.20	13.91 353.2	2.75 69.9	80 36.3	1,170,000 5,241,600
CT-53	WCT-53	8.875 225.43	8.890 225.81	16.500 419.10	16.500 419.10	3.000 76.20	15.90 403.9	2.75 69.9	111 50.3	2,075,000 9,296,000
CT-54	WCT-54	9.313 236.54	9.327 236.91	16.500 419.10	16.500 419.10	3.000 76.20	15.91 404.1	2.75 69.9	106 48.1	1,812,000 8,117,760
CT-55	WCT-55	9.625 244.48	9.640 244.86	18.500 469.90	18.500 469.90	3.750 95.25	17.91 454.9	3.38 85.7	210 95.3	2,269,000 10,165,120

Rollway Tapered Thrust Bearings

Rollway Tapered Thrust bearings utilize crowned tapered rolling elements separated by a machined brass roller riding retainer (cage) contained within precision ground shaft and housing plates. Inherent to the design, the self centering action of the tapered rollers provide "true rolling motion". These attributes counteract the natural gravitational forces on the roller assembly when subjected to horizontal applications. Tapered thrust bearings are intended for high axial loads (load parallel to the axis of rotation). There are 3 types of Tapered Thrust bearings available, TTHD, TTVF, and Self Aligning TTVF. Depending on your preference, these bearings are available in a wide variety of sizes and options as illustrated on the pages to follow.

For a given shaft size and approximate envelope, the tapered thrust bearing's dynamic capacity is considerably greater than a cylindrical roller bearing.

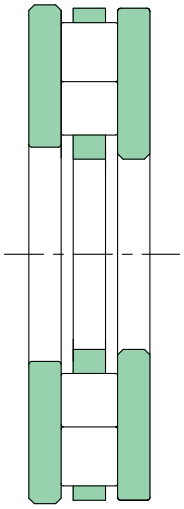

Cylindrical Thrust
T768
8" x 16" x 3"
Dynamic Capacity = 516,400 lbs

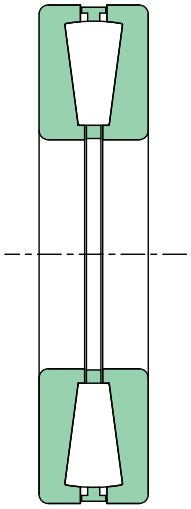

Tapered Thrust
T-16050
8" x 16.5" x 3.625"
Dynamic Capacity = 752,120 lbs

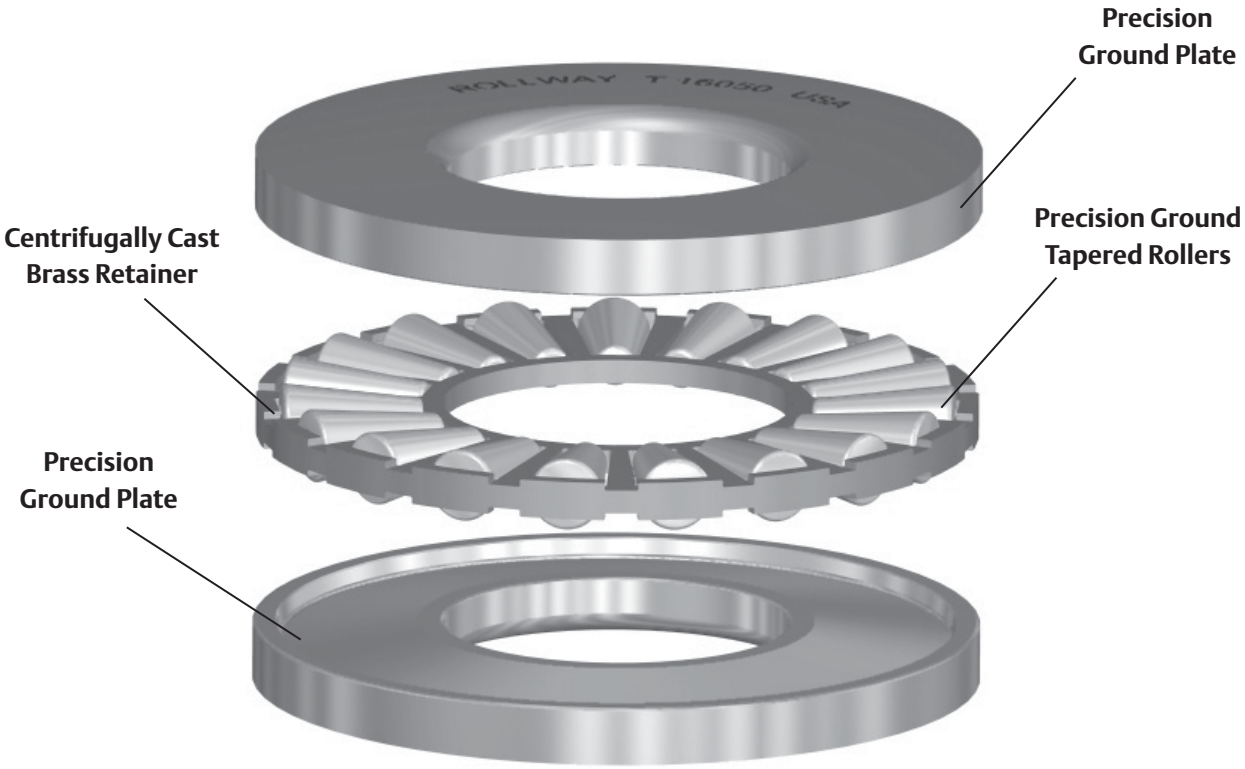

Tapered Thrust Nomenclature

Standard Thrust Nomenclature

Type Designator
T - TTHD Style Thrust

Size Designator
Reference Catalog For Sizes.

Variation Code
A - Variation From Standard - Consult Catalog Or Application Engineering
F - Full Complement Of Rollers
V - Bearing Plates And Rollers Made From VIMVAR Or CEVM Steel

T - 911 - A

T-Flat Nomenclature

Type Designator
T-F - TTVF Style
T-FS - TTVF Style With 2 Piece Aligning Plate

Size Designator
Bearing Bore And Outside Diameter Size. The First Three Digits Are The Bore Size And The Second Three Digits Are The O.D. Size. Example: 050105 Refers To A 5 Inch Bore And 10.5 Inch O.D.

Variation Code
201 To 215 Are Numerically Assigned Codes That Designate The Variation From Standard (Example 201 = 1st Variation, 202 = 2nd Variation, Etc.). These Bearing Code Numbers Do Not Reference The Modification From Standard. Application Engineering Must Be Contacted For Information Concerning A Particular Modification.

T - 050105 - F 201

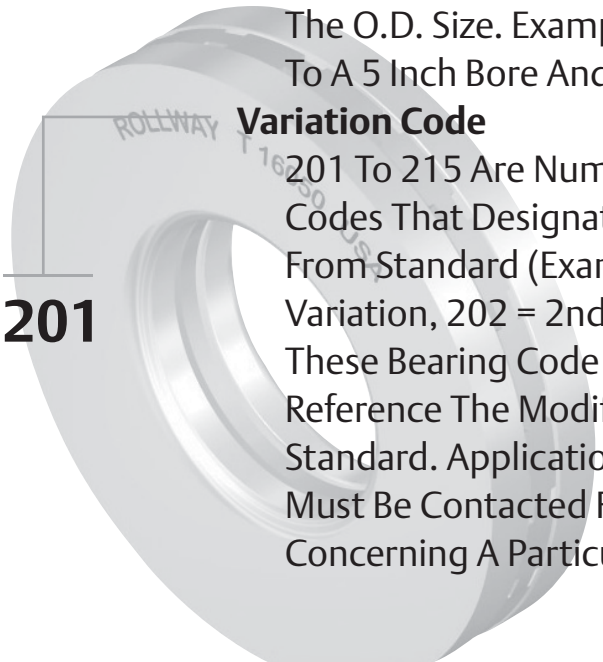

Features and Benefits

Superior Performance in Horizontal Shaft Applications

Tapered thrust bearings have been found to have superior performance in horizontal shaft applications. The self centering action of the rollers helps counteract the gravitational effect of the roller assembly, thus reducing the possibility of the roller assembly contacting the shaft.

Steel

The plates and rollers are made from case hardened carburizing bearing grade steel. Upon request we can manufacture the components from CEVM or VIMVAR grades of material.

Precision Ground Inner and Outer Plates

All thrust plates are accurately ground for flatness and parallelism of roller riding and backing surfaces. Locating diameters are ground to obtain an accurate fit on the shaft or in the housing. The surfaces of the plates are ground to provide a long operating life. The guide rib on the tapered plates is spherically ground to match the roller and reduce friction. All tapered thrust plates are designed to be used with a full complement of rollers, which makes it possible to supply this version for any size. Rollway tapered thrust pates are manufactured from Carburizing Bearing Grade Steel. The surfaces are precision ground to ABMA standards. Unlike the cylindrical thrust, these plates can be used as either the shaft or housing plate.

Precision Ground Tapered Rollers

All rolling elements are precision ground and graded to provide an even distribution of load over the contact surfaces. Rollers are crowned for optimum contact stress patterns by reducing the end stress between the roller and the thrust plates. The large ends of the rollers are spherically ground. This provides controlled contact between the rollers and the guide rib, thus enhancing the flow of lubricant. These rollers are manufactured from Carburizing Bearing Grade Steel.

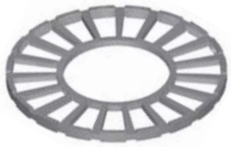

Machined Brass Retainer

The TTHD taper thrust bearing retainers are machined from a single piece of centrifugally cast brass. The retainer is designed to pilot on the thrust plates' flanges. The roller pockets are accurately machined at right angles to the thrust force which will be applied to the bearing. By virtue of their design, tapered thrust bearings provide true rolling motion when compared to cylindrical thrust bearings whose rollers tend to have a minimal amount of slippage due to the fundamental design.

Features and Benefits continued

Pin through Steel Type Retainer – T-Flat Type

The T-Flat retainers are "pin through" style (pins extend through the center of the roller). The retainer consists of two steel rings through which the hardened steel pins are secured. An alternate design is a retainer machined from a single piece of centrifugally cast brass with each roller retained by two pins.

Types and Styles

Standard Tapered Thrust Style

Rollway tapered thrust bearings (TTHD Style) are engineered for applications that are under the harshest industrial conditions. These bearings feature tapered rollers positioned between two plates with tapered raceways.

The tapered thrust differs significantly from the cylindrical roller thrust as there is true rolling motion with the vertex of the conical sections intersecting the bearing axis. When the bearing is loaded, the rollers exhibit an outward force that is countered by the plate's outer guide rib. The large spherical end of the roller is counter bored to help improve lubrication between the roller and guide rib. By virtue of the additional contact surface these bearings will have a higher dynamic capacity than a similar sized, cylindrical roller thrust bearing.

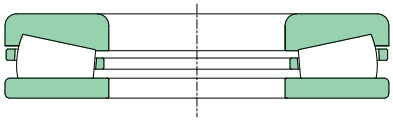

T-Flat Style

The T-Flat is similar to the TTHD style except one plate is flat. The guide rib on the one tapered raceway resists the induced radial force component caused by the inclined plane while the flat plate allows radial displacement without adversely affecting bearing operation. Maximum capacity is achieved through close spacing of rollers through the use of a steel, pin type retainer.

Basic Construction Type: Standard Tapered Roller (TTHD Style)

Rolling Elements: Crowned Tapered Rollers With Sphered Ends

Bearing Material: Case Carburized Bearing Grade Steel

Retainer Types: Machined Brass Or Pin Through Steel Type

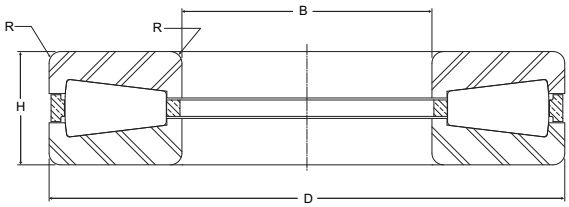

Tapered Thrust Bearings

Part No.	B Bore	D Outside Diameter	H Height	R Housing & Shaft Fillet	Bearing Weight	C Basic Dynamic Rating	Co Basic Static Rating
	inch mm	inch mm	inch mm	inch mm	lb kg	lb/N	lb/N
T-411	4.000 101.60	8.500 215.90	1.813 46.05	.13 3.3	20 9.1	219,100 981,570	762,700 3,416,900
T-411F	4.000 101.60	8.500 215.90	1.813 46.05	.13 3.3	20 9.1	268,000 1,200,640	988,000 4,426,240
T-441	4.400 111.76	8.800 223.52	2.200 55.88	.13 3.3	25 11.3	234,000 1,048,320	822,000 3,682,560
T-451	4.500 114.30	9.875 250.83	2.125 53.98	.16 4.1	31 14.1	305,000 1,366,400	1,096,000 4,910,080
T-520	5.000 127.00	9.875 250.83	2.188 55.56	.19 4.8	31 14.1	328,000 1,469,440	1,094,000 4,901,120
T-511	5.000 127.00	10.500 266.70	2.313 58.75	.19 4.8	37 16.7	322,500 1,444,800	1,232,570 5,521,910
T-511A	5.063 128.60	10.500 266.70	2.313 58.75	.19 4.8	37 16.7	322,500 1,444,800	1,232,570 5,521,910
T-511F	5.063 128.60	10.500 266.70	2.313 58.75	.19 4.8	37 16.7	408,000 1,827,840	1,687,000 7,557,760
T-611	6.000 152.40	12.500 317.50	2.750 69.85	.25 6.4	66 29.9	455,125 2,038,960	1,672,410 7,492,400
T-651	6.500 165.10	12.250 311.15	3.500 88.90	.25 6.4	71 32.2	375,000 1,680,000	1,472,000 6,594,560
T-661	6.625 168.28	12.000 304.80	2.750 69.85	.25 6.4	56 25.4	382,620 1,714,140	1,323,000 5,927,040
T-691	6.875 174.63	14.125 358.78	2.313 58.75	.25 6.4	93 42.2	539,980 2,419,110	2,023,000 9,063,040
T-711	7.000 177.80	14.500 368.30	2.313 58.75	.31 7.9	109 49.4	601,700 2,695,620	2,101,000 9,412,480
T-711F	7.000 177.80	14.500 368.30	2.313 58.75	.31 7.9	96 43.5	611,000 2,737,280	2,936,000 13,153,280
T-709	7.000 177.80	17.000 431.80	4.000 101.60	.13 3.3	241 109.3	229,000 1,025,920	3,245,000 14,537,600

Metric dimensions for reference only.
Not all parts are available from stock. Please contact customer service for availability (800) 626-2120.
For more information on bearing capabilities outside of our standard offering, please contact Application Engineering (800) 626-2093.

Basic Construction Type: Standard Tapered Roller (TTHD Style)

Rolling Elements: Crowned Tapered Rollers With Sphered Ends

Bearing Material: Case Carburized Bearing Grade Steel

Retainer Types: Machined Brass Or Pin Through Steel Type

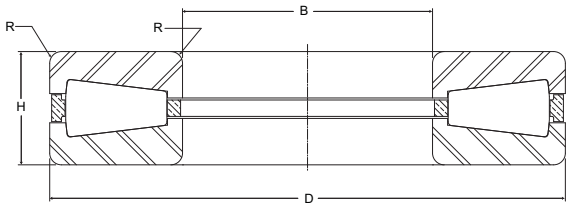

Tapered Thrust Bearings

Part No.	B	D	H	R	Bearing Weight	C	Co
	Bore	Outside Diameter	Height	Housing & Shaft Fillet		Basic Dynamic Rating	Basic Static Rating
	inch mm	inch mm	inch mm	inch mm	lb kg	lb/N	lb/N
T-7519	7.480 190.00	14.000 355.60	2.922 74.22	.25 6.4	76 34.5	490,000 2,195,200	1,893,000 8,480,640
T-811	8.000 203.20	16.500 419.10	3.625 92.08	.38 9.7	132 59.8	752,120 3,369,500	2,879,160 12,898,640
T-9020	9.000 228.60	17.000 431.80	3.495 88.77	.38 9.7	136 61.7	744,400 3,334,910	2,883,000 12,915,840
T-911	9.000 228.60	19.000 482.60	4.125 104.78	.44 11.2	237 107.5	991,250 4,440,800	3,796,762 17,009,490
T-911A	9.250 234.95	19.000 482.60	4.125 104.78	.44 11.2	232 105.2	991,250 4,440,800	3,796,762 17,009,490
T-921	9.250 234.95	21.500 546.10	5.000 127.00	.44 11.2	351 159.2	1,361,600 6,099,970	5,346,100 23,950,530
T-537504	9.500 241.30	19.500 495.30	5.000 127.00	.44 11.2	287 130.2	1,050,000 4,704,000	3,900,000 17,472,000
T-1011	10.000 254.00	21.125 536.58	4.625 117.48	.44 11.2	320 145.1	1,230,400 5,512,190	4,874,000 21,835,520
T-539210	10.750 273.05	21.750 552.45	5.250 133.35	.44 11.2	364 165.1	1,257,000 5,631,360	4,800,000 21,504,000
T-539211	10.750 273.05	23.750 603.25	5.750 146.05	.44 11.2	496 224.9	1,522,000 6,818,560	6,003,000 26,893,440
T-1120	11.000 279.40	23.750 603.25	5.375 136.53	.44 11.2	490 222.2	1,573,660 7,050,000	6,286,210 28,162,220
T-16021	16.000 406.40	28.000 711.20	5.750 146.05	.38 9.7	575 260.8	1,746,000 7,822,080	6,726,000 30,132,480
T-16050	16.000 406.40	33.000 838.20	7.000 177.80	.50 12.7	1,165 528.4	2,877,500 12,891,200	11,295,180 50,602,410

Metric dimensions for reference only.
Not all parts are available from stock. Please contact customer service for availability (800) 626-2120.
For more information on bearing capabilities outside of our standard offering, please contact Application Engineering (800) 626-2093.

Basic Construction Type: T-Flat (TTVF Style)

Rolling Elements: Crowned Tapered Rollers With Sphered Ends

Bearing Material: Case Carburized Bearing Grade Steel

Retainer Types: Machined Brass Or Pin Through Steel Type

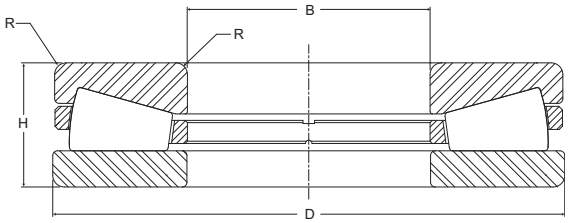

T-Flat Tapered Thrust Bearings

Part No.	B	D	H	R	Bearing Weight	C	Co
	Bore	Outside Diameter	Height	Housing & Shaft Fillet		Basic Dynamic Rating	Basic Static Rating
	inch mm	inch mm	inch mm	inch mm	lb kg	lb/N	lb/N
T-050105-F	5.000 127.00	10.500 266.70	2.313 58.74	.14 3.6	41 18.6	292,000 1,308,160	594,000 2,661,120
T-059118-F	5.904 149.95	11.800 299.72	3.531 89.69	.12 3.0	79 35.8	487,000 2,181,760	1,833,000 8,211,840
T-070145-F	7.000 177.80	14.000 355.60	3.250 82.55	.24 6.1	109 49.4	612,000 2,741,760	2,764,000 12,382,720
T-090190-F	9.000 228.60	19.000 482.60	5.750 146.05	.25 6.4	300 136.1	1,326,800 5,944,060	2,473,000 11,079,040
T-095230-F	9.500 241.30	23.000 584.20	6.000 152.40	.25 6.4	488 221.3	1,887,600 8,456,450	8,504,000 38,097,920
T-100200-F	10.000 254.00	20.000 508.00	4.250 107.95	.19 4.8	218 98.8	1,332,000 5,967,360	5,070,000 22,713,600
T-101215-F	10.000 254.00	21.500 546.10	6.500 165.10	.25 6.4	501 227.2	1,777,000 7,960,960	3,352,000 15,016,960
T-110237-F	11.000 279.40	23.750 603.25	5.375 136.53	.19 4.8	508 230.4	1,760,000 7,884,800	4,000,000 17,920,000
T-120240-F	12.000 304.80	24.000 609.60	4.500 114.30	.25 6.4	421 190.9	1,660,000 7,436,800	3,994,000 17,893,120
T-120265-F	12.000 304.80	26.500 673.10	6.750 171.45	.30 7.6	767 347.9	2,470,000 11,065,600	10,100,000 45,248,000
T-140260-F	14.000 355.60	26.000 660.40	9.125 231.78	.31 7.9	790 358.3	2,219,000 9,941,120	4,467,000 20,012,160
T-170340-F	17.000 431.80	34.000 863.60	9.000 228.60	.38 9.7	1,708 774.7	4,010,000 17,964,800	8,500,000 38,080,000

Metric dimensions for reference only.
Not all parts are available from stock. Please contact customer service for availability (800) 626-2120.
For more information on bearing capabilities outside of our standard offering, please contact Application Engineering (800) 626-2093.

Basic Construction Type: T-Flat Aligning Type Bearing (TTVF Style), 3 Degrees Static Misalignment

Rolling Elements: Crowned Tapered Rollers With Sphered Ends

Bearing Material: Case Carburized Bearing Grade Steel

Retainer Types: Machined Brass Or Pin Through Steel Type

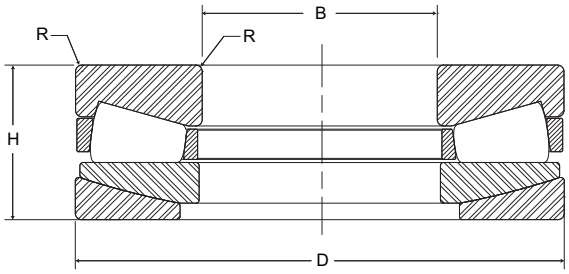

T-Flat Self Aligning Thrust Bearings

Part No.	B	D	H	R	Bearing Weight	C	Co
	Bore	Outside Diameter	Height	Housing & Shaft Fillet		Basic Dynamic Rating	Basic Static Rating
	inch mm	inch mm	inch mm	inch mm	lb kg	lb/N	lb/N
T-095192-FS	9.500 241.30	19.250 488.95	6.000 152.40	.36 9.1	315 142.8	1,120,000 5,017,600	2,240,000 10,035,200
T-120240-FS	12.000 304.80	24.000 609.60	8.500 215.90	.25 6.4	690 312.9	2,250,000 10,080,000	4,010,000 17,964,800
T-140260-FS	14.000 355.60	26.000 660.40	10.000 254.00	.40 10.2	900 408.2	2,490,000 11,155,200	4,180,000 18,726,400

Metric dimensions for reference only.
Not all parts are available from stock. Please contact customer service for availability (800) 626-2120.
For more information on bearing capabilities outside of our standard offering, please contact Application Engineering (800) 626-2093.

Rollway Tandem Thrust Bearings

Rollway Tandem Thrust bearings are also known as “multi-stage thrust” bearings. Tandem Thrust bearings are comprised of “stages” which include precision ground and matched thrust plates and compression sleeves separated by cylindrical roller assemblies. This design enables the Tandem Thrust bearings to provide a solution in a radial restricted envelope. The bearings are available in multiple stages, 2-8 to accommodate your design requirements. Depending on your preference, these bearings are available in a wide variety of sizes and options as illustrated on the pages to follow.

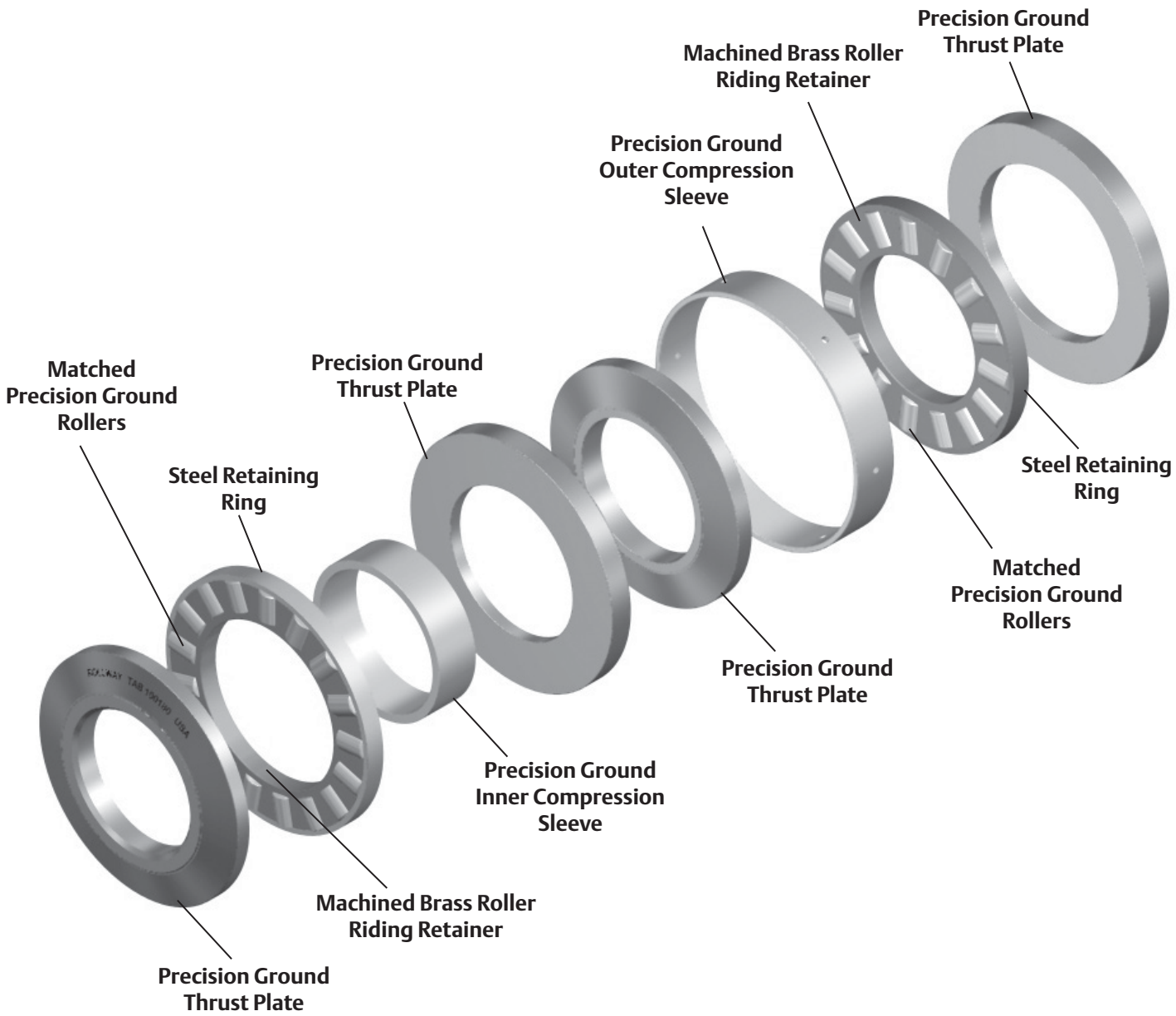

Features and Benefits

Minimal Backing Support Requirements

The tandem thrust design permits the use of minimal shaft and housing shoulders required by some applications. The cantilevering action of the thrust plates and use of compression sleeves enable these bearings to be used effectively where only minimal shaft and housing shoulder exist.

Space Saving Design

The use of a tandem thrust bearing enables the designer to create a gearbox with high thrust capacity within a small space. The end result is a gearbox with a smaller footprint. The drawings below are a comparison of three different thrust bearings with similar dynamic capacity. This illustrates the dramatic reduction in outside diameter associated with the tandem thrust bearings.

T752 Cylindrical Thrust
Dynamic Capacity=375,500 lbs
O.D.=14”

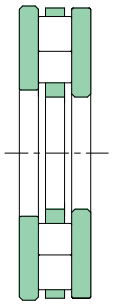

T-511 Tapered Thrust
Dynamic Capacity=322,500 lbs
O.D.=10.5”

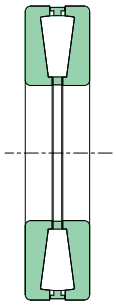

TMF-030127-201
6-Stage Tandem Thrust
Dynamic Capacity=329,900 lbs
O.D.=5”

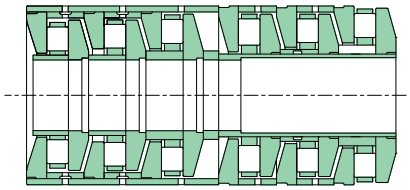

Features and Benefits continued

Matched Precision Ground Rollers

Rollers are manufactured from Carburized Bearing Grade Steel. The surfaces are ground and superfinished. The outside diameters are heavily crowned. The ends have a large machined radius designed to reduce friction between the roller and the retaining ring. The larger bearings use multiple rollers per pocket to minimize slippage.

Machined Brass Roller Riding Retainer

Retainers are manufactured from brass. The roller slots are accurately machined to provide smooth operation of the roller assembly. The rollers are retained by a steel band placed over the outside diameter of the retainer.

Precision Ground Inner and Plates

Plates are manufactured from Carburizing Bearing Grade Steel. The surfaces are precision ground and superfinished.

Precision Ground Inner and Outer Compression Sleeves

Compression Sleeves are manufactured from various materials designed to provide controlled deflection. These components are match ground with the plates.

Custom Capabilities

Detailed Drawings are available on the listed Tandem Thrust bearing designs. Upon request for a specific part number, a drawing will be sent containing the information in the following drawing along with the rated dynamic capacity. Shaft and housing fits are also available upon request.

New designs can be engineered and produced in small volumes for example combination radial and thrust bearings, concave and convex designs, screw down thrust, etc.. Contact Application Engineering for assistance in developing a tandem bearing design that will satisfy your application requirements. Based on your design envelope, loads, speeds and desired life, our engineers will design a tandem thrust bearing for your application. Let our Application Engineering Staff help you.

ROLLWAY® *Tandem Thrust Bearings*

Basic Construction Type: Multi Stage Cylindrical Roller Thrust Bearing

Rolling Elements: Crowned Cylindrical Rollers

Bearing Material: Through Hardened Or Case Carburized Bearing Grade Steel

Series: 2, 3, 4, 6, Or 8 Stages

Retainer Types: Machined Brass

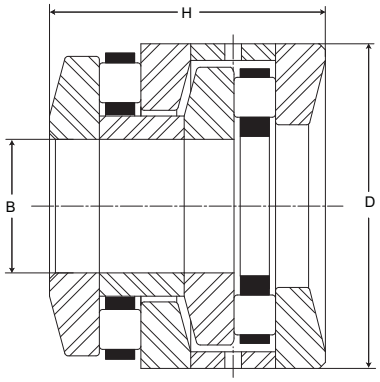

2 Stage

Part No.	B Bore inch mm	D O.D. inch mm	H Height inch mm	Basic Dynamic Rating lb N	Bearing Weight lb kg
TAB-017043-201	1.7500 44.450	4.3765 111.163	3.8750 98.425	79,000 353,920	11.0 4.9
TAB-027047-203	2.7570 70.028	4.7035 119.469	2.6250 66.675	75,100 336,450	6.8 3.1
TAB-030066-201	3.0000 76.200	6.6265 168.313	3.6250 92.075	141,000 631,680	22.0 9.9
TAB-040082-201	4.0000 101.600	8.2515 209.588	7.0620 179.375	236,000 1,057,280	44 19.9
TAB-040100	4.0000 101.600	10.0000 254.000	5.5620 141.275	376,000 1,684,480	84 38.1
TAB-050090-202	5.0000 127.000	9.0000 228.600	5.3120 134.925	272,000 1,218,560	52 23.6
TAB-060110-280	6.0000 152.400	11.0000 279.400	7.2500 184.150	427,000 1,912,960	109 49.4
TAB-060120-201	6.0000 152.400	12.0000 304.800	6.2500 158.750	454,700 2,037,060	118 53.5
TAB-060140-201	6.0000 152.400	14.0000 355.600	6.8120 173.025	619,000 2,773,120	192 87.1
TAB-062120-201	6.2500 158.750	12.0000 304.800	5.0000 127.000	440,000 1,971,200	93 42.2
TAB-070140-204	7.0000 177.800	14.0000 355.600	7.1250 180.975	605,000 2,710,400	184 83.4
TAB-070140-205	7.0000 177.800	14.0000 355.600	7.7500 196.850	713,000 3,194,240	200 90.7
TAB-070160-201	7.0000 177.800	16.0000 406.400	9.0000 228.600	925,000 4,144,000	328 148.8
TAB-072160-202	7.2500 184.150	16.0000 406.400	9.0000 228.600	897,500 4,020,800	202 91.6
TAB-080160-201	8.0000 203.200	16.0000 406.400	7.5000 190.500	775,000 3,472,000	254 115.2
TAB-080172-201	8.0000 203.200	17.2460 438.048	9.7500 247.650	1,009,000 4,520,320	332 150.6
TAB-090190-202	9.0000 228.600	19.0000 482.600	9.5000 241.300	1,240,000 5,555,200	468 212.3
TAB-092169-203	9.2500 234.950	16.9390 430.251	7.7500 196.850	970,000 4,345,600	261 118.4
TAB-100180	10.0000 254.000	18.0000 457.200	10.5000 266.700	1,078,000 4,829,440	425 192.7
TAB-100200-202	10.0000 254.000	20.0000 508.000	8.5000 215.900	1,120,000 5,017,600	449 203.6
TAB-100200-204	10.0000 254.000	20.0000 508.000	11.7500 298.450	1,458,000 6,531,840	621 281.7
TAB-101215-204	10.1000 256.540	21.5025 546.164	12.8750 327.025	1,987,000 8,901,760	817 370.7
TAB-120240-209	12.0000 304.800	24.0000 609.600	12.5000 317.500	2,320,000 10,393,600	1,050 476.3
TAB-140260-201	14.0000 355.600	26.0000 660.400	13.6870 347.650	2,565,000 11,491,200	1,150 521.6
TAB-140280-201	14.0000 355.600	28.0000 711.200	13.2500 336.550	2,469,000 11,061,120	1,370 621.4
TAB-170340-201	17.0000 431.800	34.0000 863.600	17.6880 449.275	3,800,000 17,024,000	2,800 1,270.1
TAB-220420-201	22.0000 558.800	42.0000 1,066.800	18.8750 479.425	4,810,000 21,548,800	4,920 2,231.7

Metric dimensions for reference only.
Not all parts are available from stock. Please contact customer service for availability (800) 626-2120.
For more information on bearing capabilities outside of our standard offering, please contact Application Engineering (800) 626-2093.

Tandem Thrust Bearings ROLLWAY®

Basic Construction Type: Multi Stage Cylindrical Roller Thrust Bearing

Rolling Elements: Crowned Cylindrical Rollers

Bearing Material: Through Hardened Or Case Carburized Bearing Grade Steel

Series: 2, 3, 4, 6, Or 8 Stages

Retainer Types: Machined Brass

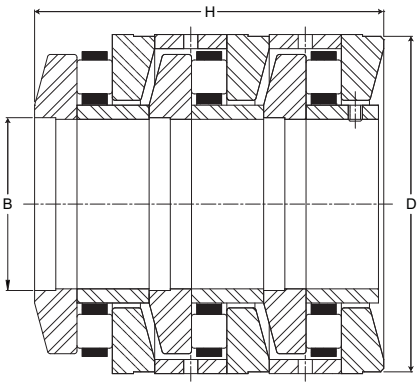

3 Stage

Part No.	B Bore inch mm	D O.D. inch mm	H Height inch mm	Basic Dynamic Rating lb N	Bearing Weight lb kg
TAC-014035-202	1.3775 34.989	3.5433 90.000	4.3750 111.125	93,600 419,330	7.9 3.6
TAC-022094-201	2.1654 55.001	9.4488 240.000	9.4488 240.000	66,700 298,820	113 51.3
TAC-030053-210	3.0000 76.200	5.3880 136.855	4.2500 107.950	155,000 694,400	10 4.5
TAC-030066-204	3.0000 76.200	6.6265 168.313	5.6000 142.240	160,800 720,380	33 14.9
TAC-040100-202	4.0000 101.600	10.0000 254.000	8.1250 206.375	458,000 2,051,840	120 54.4
TAC-101215-203	10.1000 256.540	21.5025 546.164	19.2500 488.950	2,572,000 11,522,560	1,050 476.2
TAC-120240-207	12.0000 304.800	24.0000 609.600	21.2500 539.750	3,460,000 15,500,800	1,800 816.5
TAC-170340-204	17.0000 431.800	34.0000 863.600	25.5200 648.208	5,220,000 23,385,600	3,399 1,541.7

Metric dimensions for reference only.
Not all parts are available from stock. Please contact customer service for availability (800) 626-2120.
For more information on bearing capabilities outside of our standard offering, please contact Application Engineering (800) 626-2093.

ROLLWAY® *Tandem Thrust Bearings*

Basic Construction Type: Multi Stage Cylindrical Roller Thrust Bearing

Rolling Elements: Crowned Cylindrical Rollers

Bearing Material: Through Hardened Or Case Carburized Bearing Grade Steel

Series: 2, 3, 4, 6, Or 8 Stages

Retainer Types: Machined Brass

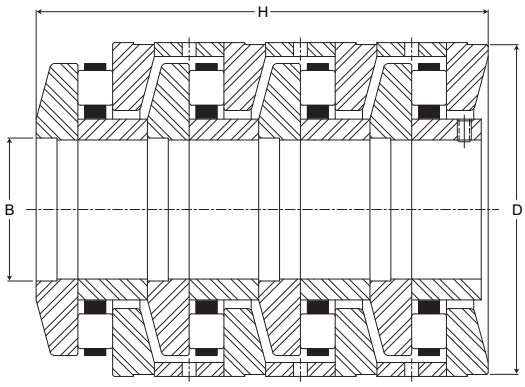

4 Stage

Part No.	B Bore inch mm	D O.D. inch mm	H Height inch mm	Basic Dynamic Rating lb N	Bearing Weight lb kg
TAD-012033-204	1.1830 30.048	3.3465 85.001	4.7750 121.285	69,400 310,910	8.5 3.8
TMD-040127	1.5748 40.000	5.0000 127.000	6.9685 177.000	201,500 902,720	27 12.2
TAD-017047-202	1.7712 44.988	4.7235 119.977	5.9060 150.012	191,000 855,680	20 9.1
TAD-030082	3.0000 76.200	8.2500 209.550	10.0000 254.000	496,000 2,222,080	35 15.8
TAD-059120-201	5.9055 150.000	12.0079 305.001	12.2047 309.999	852,000 3,816,960	290 131.5

Metric dimensions for reference only.
Not all parts are available from stock. Please contact customer service for availability (800) 626-2120.
For more information on bearing capabilities outside of our standard offering, please contact Application Engineering (800) 626-2093.

Basic Construction Type: Multi Stage Cylindrical Roller Thrust Bearing

Rolling Elements: Crowned Cylindrical Rollers

Bearing Material: Through Hardened Or Case Carburized Bearing Grade Steel

Series: 2, 3, 4, 6, Or 8 Stages

Retainer Types: Machined Brass

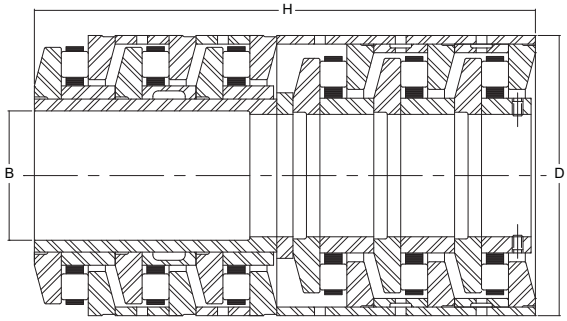

6 Stage

Part No.	B Bore inch mm	D O.D. inch mm	H Height inch mm	Basic Dynamic Rating lb N	Bearing Weight lb kg
TMF-023090	0.9055 23.000	3.5433 90.000	8.2677 210.000	160,650 719,710	16 7.3
TAF-011028	1.1024 28.001	2.7559 70.000	5.5118 140.000	89,700 401,860	6 2.7
TMF-030127-201	1.1811 30.000	5.0000 127.000	11.1024 282.001	329,900 1,477,950	44 19.9
TAF-017063	1.7000 43.180	6.2500 158.750	10.9750 278.765	413,200 1,851,140	72 32.6
TAF-019060	1.8940 48.108	6.0480 153.619	9.2500 234.950	366,000 1,639,680	52 23.5

Metric dimensions for reference only.
Not all parts are available from stock. Please contact customer service for availability (800) 626-2120.
For more information on bearing capabilities outside of our standard offering, please contact Application Engineering (800) 626-2093.

Basic Construction Type: Multi Stage Cylindrical Roller Thrust Bearing

Rolling Elements: Crowned Cylindrical Rollers

Bearing Material: Through Hardened Or Case Carburized Bearing Grade Steel

Series: 2, 3, 4, 6, Or 8 Stages

Retainer Types: Machined Brass

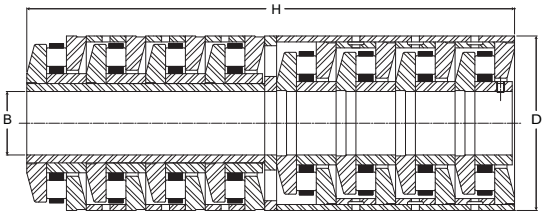

8 Stage

Part No.	B Bore inch mm	D O.D. inch mm	H Height inch mm	Basic Dynamic Rating lb N	Bearing Weight lb kg
TMH-023090-201	0.9055 23.000	3.5433 90.000	10.6772 271.201	214,200 959,620	30 13.6
TMH-023092	0.9055 23.000	3.6220 91.999	12.0079 305.001	246,000 1,102,080	27 12.2
TMH-030127	1.1811 30.000	5.0000 127.000	14.6575 372.301	434,100 1,944,770	52 23.6
TMH-040170	1.5748 40.000	6.6929 170.000	19.2910 489.991	661,800 2,964,860	123 55.8

Metric dimensions for reference only.
Not all parts are available from stock. Please contact customer service for availability (800) 626-2120.
For more information on bearing capabilities outside of our standard offering, please contact Application Engineering (800) 626-2093.

Thrust Bearing Engineering see page F-44.

For more information on bearing capabilities outside of our standard offering, please contact Application Engineering (800) 626-2093.

Load Ratings and Life

Life Calculations

The L10 (rating) life for any given application and bearing selection can be calculated in terms of millions of revolutions by using the bearing Basic Dynamic Rating and applied thrust load. The L10 life for any given application can be calculated in terms of hours, using the bearing Basic Dynamic Rating, applied load and suitable speed factors, by the following equation:

For thrust cylindrical roller and thrust tapered roller bearings:

$$L_{10} = \left(\frac{C}{P}\right)^{10/3} x \frac{1{,}000{,}000}{60 \text{ x } n} = \left(\frac{C}{P}\right)^{10/3} x \frac{16667}{n}$$

Where:

L_{10} = The # of hours that 90% of identical bearings under ideal conditions will operate at a specific speed and condition before fatigue is expected to occur.

C = Basic Dynamic Rating (lbs) 1,000,000 Revolutions

P = Constant Equivalent Load (lbs)

n = Speed (RPM)

Additionally, the ABMA provides application factors for all types of bearings which need to be considered to determine an adjusted Rated Life (Lna). L10 life rating is based on laboratory conditions yet other factors are encountered in actual bearing application that will reduce bearing life. Lna life rating takes into account reliability factors, material type, and operating conditions.

$$L_{na} = a_1 \text{ x } a_2 \text{ x } a_3 \text{ x } L_{10}$$

Where:

L_{na} = Adjusted Rated Life.

a_1 = Reliability Factor. Adjustment factor applied where estimated fatigue life is based on reliability other than 90% (See Table No 1).

a_2 = Material Factor. Life adjustment for bearing race material. Regal Power Transmission Solutions bearing races

Table No. 1 Life Adjustment Factor for Reliability

Reliability %	L_{na}	a_1
90	L10	1
95	L5	0.62
96	L4	0.53
97	L3	0.44
98	L2	0.33
99	L1	0.21
50	L50	5

are manufactured from bearing quality steel. Therefore the a_2 factor is 1.0.

a_3 = Life Adjustment Factor for Operating Conditions. This factor should take into account the adequacy of lubricant, presence of foreign matter, conditions causing changes in material properties, and unusual loading or mounting conditions. Assuming a properly selected and mounted bearing having adequate seals and lubricant operating below 250°F and tight fitted to the shaft, the a3 factor should be 1.0.

Load Ratings and Life Continued

Vibration and shock loading can act as an additional loading to the steady expected applied load. When shock or vibration is present, an a3 Life Adjustment Factor can be applied. Shock loading has many variables which often are not easily determined. Typically, it is best to rely on one's experience with the particular application. Consult Application Engineering for assistance with applications involving shock or vibration loading.

The a3 factor takes into account a wide range of application and mounting conditions as well as bearing features and design. Accurate determination of this factor is normally achieved through testing and in-field experience. Regal Power Transmission Solutions offers a wide range of options which can maximize bearing performance. Consult Application Engineering for more information.

Variable Load Formula

Root mean load (RML) is to be used when a number of varying loads are applied to a bearing for varying time limits. Maximum loading still must be considered for bearing size selection.

$$\text{RML}^* = \sqrt[10/3]{\frac{(L_1^{10/3} N_1) + (L_2^{10/3} N_2) + (L_3^{10/3} N_3)}{100}}$$

Where:
RML = Root Mean Load (lbs.)
L_1, L_2, etc. = Load in pounds
N_1, N_2, etc. = Percent of total time operated at loads L_1, L_2, etc.

* Apply RML to rating at mean speed to determine resultant life.

Mean Speed Formula

The following formula is to be used when operating speed varies over time.

$$\text{Mean Speed} = \frac{S_1N_1 + S_2N_2 + S_3N_3}{100}$$

S_1S_2, etc = Speeds in RPM
N_1N_2, etc = Percentage of total time operated at speeds S_1S_2, etc

Load Ratings and Life Continued

Bearing Life In Oscillating Applications

The equivalent rotative speed (ERS) is used in life calculations when the bearing does not make complete revolutions during operation. The ERS is then used as the bearing operating speed in the calculation of the L10 (Rating) Life. The formula is based on sufficient angular rotation to have roller paths overlap.

ERS = Equivalent Rotative Speed

N = Total number of degrees per minute through which the bearing will rotate.

$$ERS = \frac{N}{360}$$

In the above formula, allowance is made for the total number of stress applications on the weakest race per unit time, which, in turn, determines fatigue life and the speed factors. The theory behind fretting corrosion is best explained by the fact that the rolling elements in small angles of oscillation retrace a path over an unchanging area of the inner or outer races where the lubricant is prevented by inertia from flowing in behind the roller as the bearing oscillates in one direction. Upon reversal, this small area of rolling contact is traversed by the same roller in the dry state. The friction of the two unlubricated surfaces causes fretting corrosion and produces failures which are unpredictable from a normal life standpoint.

With a given bearing selected for an oscillating application, the best lubrication means is a light mineral oil under positive flow conditions. With a light oil, there is a tendency for all areas in the bearing load zone to be immersed in lubricant at all times. The full flow lubrication dictates that any oxidized material which may form is immediately carried away by the lubricant, and since these oxides are abrasive, further wear tends to be avoided. If grease lubrication must be used, it is best to consult with either the bearing manufacturer or the lubricant manufacturer to determine the best possible type of lubricant. Greases have been compounded to resist the detrimental effect of fretting corrosion for such applications.

Static Load Rating

The “static load rating” for rolling element bearings is that uniformly distributed static radial load acting on a non-rotating bearing, which produces a contact stress of 580,000 psi (roller bearings) or 630,000 psi (ball bearings) at the center of the most heavily loaded rolling element. At this stress level, plastic deformation begins to be significant. Experience has shown that the plastic deformation at this stress level can be tolerated in most bearing applications without impairment of subsequent bearing operation. In certain applications where subsequent rotation of the bearing is slow and where smoothness and friction requirements are not too exacting, a higher static load limit can be tolerated. Where extreme smoothness is required or friction requirements are critical, a lower static load limit may be necessary.

Minimum Bearing Load

Skidding, or sliding, of the rolling elements on the raceway instead of a true rolling motion can cause excessive wear. Applications with high speeds and light loading are particularly prone to skidding. As a general guideline, rolling element bearings should be radially loaded at least 2% of Basic Dynamic Rating. For applications where load is light relative to the bearings dynamic load rating, consult Application Engineering for assistance.

Thrust Engineering Section

Rollway cylindrical roller thrust bearings are designed to support thrust loads (loads parallel to the axis of rotation) at relatively high speeds. Cylindrical roller thrust bearings are relatively stiff, require a minimum amount of axial space, and handle shock loading relatively well. Rollway manufactures four different styles of cylindrical roller thrust bearings:

1. Single Acting – Supports thrust or axial load in one direction.
2. Aligning – Accepts an initial static misalignment of nor more than 3 degrees.
3. Double Acting – Supports thrust or axial load in two directions.
4. Crane Hook Thrust – A shielded cylindrical roller thrust bearing that supports thrust or axial load in one direction.

Rollway tapered thrust bearings (TTHD and TTVF) are engineered for applications that contain high thrust loads and heavy shock loads. These bearings feature tapered or conical rollers positioned between two plates with tapered raceways. The tapered thrust bearing allows for true rolling motion with the vertex of the conical sections intersecting the bearing axis. The large end of each tapered roller is spherically ground. When the bearing is under load, this curvature guides the rollers accurately. The large spherical end of the roller is counterbored to improve lubrication between the roller and guide rib. By virtue of the additional contact surface, these bearings will have a higher dynamic rating than a similar sized cylindrical roller thrust bearing. Furthermore, they have superior performance in horizontal shaft applications. The self-centering action of the rollers counteract the gravitational effect of the roller assembly reducing the effects of the roller assembly contacting the shaft.

The tapered thrust bearings of the TTVF style are similar to the TTHD tapered thrust style except one thrust plate is flat. The guide rib on the one tapered raceway resists the induced radial force component caused by the inclined plane while the flat plate allows radial displacement without adversely affecting bearing operation. Maximum capacity is achieved through close spacing of the rollers through the use of a steel, hardened pin type retainer.

Rollway tandem thrust bearings, also referred to as multi-stage thrust bearings, were originally designed and patented by Rollway. The bearing consists of a series of thrust plates and roller assemblies with compression sleeves separating the stages. The design of the bearing sleeves and precision match grinding of the components allow the load to be equally applied through the stages of the bearing.

The tandem design allows the use of a high capacity bearing in a small area. Popular applications for this bearing type are rotary swivels, single screw extruders, and twin screw extruders. The tandem bearing allows for the increased output of machines without increasing the size of the gearbox. Rollway manufactures tandem bearings in two, three, four, six, and eight stages. Both inch and metric series sizes are available. Bore sizes range from about 1 to 22 inches with corresponding outside diameter ranging from 3.5 to 42 inches. Rollway tandem thrust bearings are supplied to original equipment manufacturers and the aftermarket.

Operating Conditions Factor

The life of a bearing is dependent on the operating conditions of the application. Lubrication, effects of the external environment, shaft and housing geometry and mounting, all have an effect on the actual bearing life. To determine a more realistic life calculation, the Operating Conditions Factor (F) can be included into the L_{10} life equation. The actual values determination will be based on experience of the designer and the expected operating conditions.

Using the Operating Conditions Factor (F) in the life equation, L_{10} life in hours now becomes:

$$L_{10} = F \times \left[\left(\frac{C}{P} \right)^{3.33} \times \frac{16667}{n} \right]$$

Thrust Engineering Section continued

Proper selection of the F factor demands intimate knowledge of the application. Where little is known of the application, it is recommended that F = 1 be selected. As a guide in selecting a realistic value for F, Rollway suggests use of the following, cumulative, individual sub-factors, f, to arrive at the over-all factor, F, thus:

$F = f_1 X f_2 X f_3 X f_4 .....$

The table below defines the application parameters and values recommended for derivation of the individual sub-factors.

Thrust Bearing Factors

Factor	Application Condition	Factor Estimates	
		Poor	Excellent
f_1	Lubricant viscosity suitability @ bearing operating temperature (see Lubrication)	.5	1.0
f_2	External environment and provisions for isolation	.5	1.0
f_3	Operational conditions of shaft and housing squareness & rigidity	.5	1.0
f_4	Bearing thrust plate backing system full backing vs partial backing	.5	1.0

Cylindrical Roller Thrust Shaft Plate

The bore of the shaft plate is precision ground for a line to loose fit on in relation to the shaft outside diameter. The shaft plate outside diameter has a turned finish and is smaller than the housing plate's outside diameter. The plate is made from either through-hardened or carburizing grade steel with hardness to Rockwell (Rc) 58-63. Upon request we can manufacture these components from either CEVM or VIMVAR grades of material or M- 50 tool steel for high temperature applications.

All thrust plates are accurately ground for flatness and parallelism of the roller riding and backing surfaces. The roller contacting surfaces of the plates are superfinished to provide for long life. Locating diameters are ground to obtain an accurate fit on the shaft.

Cylindrical Roller Thrust Housing Plate

The outside diameter of the housing plate is precision ground for a line to loose fit in housing bore. The inside diameter has a turned finish and is larger than the shaft plate's inside diameter. The plate is made from either through-hardened or carburizing grade steel with hardness to Rockwell (Rc) 58-63. Upon request we can manufacture these components from either CEVM or VIMVAR grades of material or M- 50 tool steel for high temperature applications.

All thrust plates are accurately ground for flatness and parallelism of the roller riding and backing surfaces. The roller contacting surfaces of the plates are superfinished to provide for long life. Locating diameters are ground to obtain an accurate fit in the housing.

Thrust Engineering Section continued

Cylindrical Roller Thrust Roller Assembly

The roller assembly contains a machined brass roller-riding cage. Rollway thrust bearing retainers are machined from centrifugally cast brass. The retainers for all cylindrical roller thrust bearings are designed to be roller riding. The contoured roller pockets are accurately machined at right angles to the thrust force, which will be applied to the bearing. The rollers are retained in the assembly by a steel ring pinned to the outside diameter of the retainer.

The rollers in the roller assembly are matched to have outside diameters within .0001 inches. It should be noted that the Rollway design has a sphered roller end, which rides against the steel retaining ring for reduced wear. (The center of the contact point has zero velocity vs. the higher velocity that results from a flat ended roller contacting the ring.) The rollers used in cylindrical thrust roller bearings are also crowned. For the benefits of crowning please refer to page F-9.

Tapered Thrust Bearing Plates

The tapered thrust plates and rollers are made from carburizing grade steel surface hardened to HRc 58 minimum. Other material grades such as CEVM or VIMVAR are available upon request. All thrust plates are accurately ground for flatness and parallelism of the roller riding and backing surfaces. Locating plate diameters are surface ground to obtain an accurate fit on the shaft or in the housing. The tapered roller contacting surfaces are ground to ensure satisfactory bearing operating life.

Tapered Thrust Bearing Rollers

The tapered rolling elements are precision ground to provide an even load over the contact surfaces. The rollers are crowned for optimum stress patterns. The large end of the rollers are spherically ground providing controlled contact between the rollers and the guide rib.

Tapered Thrust Bearing Retainer

The tapered thrust bearing retainers are of two designs. The first design is a machined retainer from a single piece of centrifugally cast brass. The second design is a two-piece retainer made from hardened steel rings.

Tolerances

Rollway thrust bearings are produced to standard tolerances as listed in the following tables. Thrust bearings are available to increased accuracy upon request. Cylindrical roller thrust bearings contain rollers having a diameter variation of .0001 inches maximum per bearing.

Thrust Engineering Section continued

600 Series, Single Direction, Flat Seats

Bore Diameter		Bore Tolerance		Height Tolerance	
over	incl	high (+)	low (-)	high (+)	low (-)
inch mm	inch mm	inch mm	inch mm	inch mm	inch mm
0.0000 0.0000	1.1870 30.1498	0.0000 0.0000	0.0005 0.0127	0.0000 0.0000	0.0060 0.1524
1.1870 30.1498	1.3750 34.9250	0.0000 0.0000	0.0006 0.0152	0.0000 0.0000	0.0060 0.1524
1.3750 34.9250	1.5620 39.6748	0.0000 0.0000	0.0007 0.0178	0.0000 0.0000	0.0060 0.1524
1.5620 39.6748	1.7500 44.4500	0.0000 0.0000	0.0008 0.0203	0.0000 0.0000	0.0060 0.1524
1.7500 44.4500	1.9370 49.1998	0.0000 0.0000	0.0009 0.0229	0.0000 0.0000	0.0060 0.1524
1.9370 49.1998	2.0000 50.8000	0.0000 0.0000	0.0010 0.0254	0.0000 0.0000	0.0060 0.1524
2.0000 50.8000	2.1250 53.9750	0.0000 0.0000	0.0010 0.0254	0.0000 0.0000	0.0080 0.2032
2.1250 53.9750	2.5000 63.5000	0.0000 0.0000	0.0011 0.0279	0.0000 0.0000	0.0080 0.2032
2.5000 63.5000	3.0000 76.2000	0.0000 0.0000	0.0012 0.0305	0.0000 0.0000	0.0080 0.2032
3.0000 76.2000	3.5000 88.9000	0.0000 0.0000	0.0013 0.0330	0.0000 0.0000	0.0100 0.2540

Outside Diameter		Outside Diameter Tolerance	
over	incl	high (+)	low (-)
inch mm	inch mm	inch mm	inch mm
0.0000 0.0000	2.8750 73.0250	0.0005 0.0127	0.0000 0.0000
2.8750 73.0250	3.3750 85.7250	0.0007 0.0178	0.0000 0.0000
3.3750 85.7250	3.7500 95.2500	0.0009 0.0229	0.0000 0.0000
3.7500 95.2500	4.1250 104.7750	0.0011 0.0279	0.0000 0.0000
4.1250 104.7750	4.7180 119.8372	0.0013 0.0330	0.0000 0.0000
4.7180 119.8372	5.0000 127.0000	0.0015 0.0381	0.0000 0.0000

Thrust Engineering Section continued

600 Series, Single Direction, Aligning Seat With Aligning Washers

Bore Diameter		Bore Tolerance		Height Tolerance	
over	incl	high (+)	low (-)	high (+)	low (-)
inch mm	inch mm	inch mm	inch mm	inch mm	inch mm
0.0000 0.0000	1.1870 30.1498	0.0000 0.0000	0.0005 0.0127	0.0000 0.0000	0.0060 0.1524
1.1870 30.1498	1.3750 34.9250	0.0000 0.0000	0.0006 0.0152	0.0000 0.0000	0.0060 0.1524
1.3750 34.9250	1.5620 39.6748	0.0000 0.0000	0.0007 0.0178	0.0000 0.0000	0.0060 0.1524
1.5620 39.6748	1.7500 44.4500	0.0000 0.0000	0.0008 0.0203	0.0000 0.0000	0.0060 0.1524
1.7500 44.4500	1.9370 49.1998	0.0000 0.0000	0.0009 0.0229	0.0000 0.0000	0.0060 0.1524
1.9370 49.1998	2.0000 50.8000	0.0000 0.0000	0.0010 0.0254	0.0000 0.0000	0.0060 0.1524
2.0000 50.8000	2.1250 53.9750	0.0000 0.0000	0.0010 0.0254	0.0000 0.0000	0.0080 0.2032
2.1250 53.9750	2.5000 63.5000	0.0000 0.0000	0.0011 0.0279	0.0000 0.0000	0.0080 0.2032
2.5000 63.5000	3.0000 76.2000	0.0000 0.0000	0.0012 0.0305	0.0000 0.0000	0.0080 0.2032
3.0000 76.2000	3.5000 88.9000	0.0000 0.0000	0.0013 0.0330	0.0000 0.0000	0.0100 0.2540

Outside Diameter		Outside Diameter Tolerance	
over	incl	high (+)	low (-)
inch mm	inch mm	inch mm	inch mm
0.0000 0.0000	3.0000 76.2000	0.0007 0.0178	0.0000 0.0000
3.0000 76.2000	3.3750 85.7250	0.0009 0.0229	0.0000 0.0000
3.3750 85.7250	3.6250 92.0750	0.0011 0.0279	0.0000 0.0000
3.6250 92.0750	3.8750 98.4250	0.0013 0.0330	0.0000 0.0000
3.8750 98.4250	4.5312 115.0925	0.0015 0.0381	0.0000 0.0000
4.5312 115.0925	5.0000 127.0000	0.0017 0.0432	0.0000 0.0000

Thrust Engineering Section continued

700 Series, Single Direction, Flat Seats

Bore Diameter		Bore Tolerance		Height Tolerance	
over	incl	high (+)	low (-)	high (+)	low (-)
inch mm	inch mm	inch mm	inch mm	inch mm	inch mm
2.0000 50.8000	3.0000 76.2000	0.0000 0.0000	0.0010 0.0254	0.0000 0.0000	0.0080 0.2032
3.0000 76.2000	3.5000 88.9000	0.0000 0.0000	0.0012 0.0305	0.0000 0.0000	0.0100 0.2540
3.5000 88.9000	6.0000 152.4000	0.0000 0.0000	0.0015 0.0381	0.0000 0.0000	0.0100 0.2540
6.0000 152.4000	9.0000 228.6000	0.0000 0.0000	0.0015 0.0381	0.0000 0.0000	0.0150 0.3810
9.0000 228.6000	10.0000 254.0000	0.0000 0.0000	0.0018 0.0457	0.0000 0.0000	0.0150 0.3810
10.0000 254.0000	12.0000 304.8000	0.0000 0.0000	0.0018 0.0457	0.0000 0.0000	0.0200 0.5080
12.0000 304.8000	18.0000 457.2000	0.0000 0.0000	0.0020 0.0508	0.0000 0.0000	0.0200 0.5080
18.0000 457.2000	22.0000 558.8000	0.0000 0.0000	0.0025 0.0635	0.0000 0.0000	0.0250 0.6350
22.0000 558.8000	30.0000 762.0000	0.0000 0.0000	0.0030 0.0762	0.0000 0.0000	0.0250 0.6350

Outside Diameter		Outside Diameter Tolerance	
over	incl	high (+)	low (-)
inch mm	inch mm	inch mm	inch mm
5.0000 127.0000	10.0000 254.0000	0.0015 0.0381	0.0000 0.0000
10.0000 254.0000	18.0000 457.2000	0.0020 0.0508	0.0000 0.0000
18.0000 457.2000	26.0000 660.4000	0.0025 0.0635	0.0000 0.0000
26.0000 660.4000	34.0000 863.6000	0.0030 0.0762	0.0000 0.0000
34.0000 863.6000	44.0000 1,117.6000	0.0040 0.1016	0.0000 0.0000

Thrust Engineering Section continued

700 Series, Single Direction, Aligning Seat With Aligning Washers

Bore Diameter		Bore Tolerance		Height Tolerance	
over	incl	high (+)	low (-)	high (+)	low (-)
inch mm	inch mm	inch mm	inch mm	inch mm	inch mm
2.0000 50.8000	3.0000 76.2000	0.0000 0.0000	0.0010 0.0254	0.0000 0.0000	0.0100 0.2540
3.0000 76.2000	3.5000 88.9000	0.0000 0.0000	0.0012 0.0305	0.0000 0.0000	0.0150 0.3810
3.5000 88.9000	6.0000 152.4000	0.0000 0.0000	0.0015 0.0381	0.0000 0.0000	0.0150 0.3810
6.0000 152.4000	9.0000 228.6000	0.0000 0.0000	0.0015 0.0381	0.0000 0.0000	0.0200 0.5080
9.0000 228.6000	10.0000 254.0000	0.0000 0.0000	0.0018 0.0457	0.0000 0.0000	0.0200 0.5080
10.0000 254.0000	12.0000 304.8000	0.0000 0.0000	0.0018 0.0457	0.0000 0.0000	0.0250 0.6350
12.0000 304.8000	18.0000 457.2000	0.0000 0.0000	0.0020 0.0508	0.0000 0.0000	0.0250 0.6350
18.0000 457.2000	22.0000 558.8000	0.0000 0.0000	0.0025 0.0635	0.0000 0.0000	0.0300 0.7620

Outside Diameter		Outside Diameter Tolerance	
over	incl	high (+)	low (-)
inch mm	inch mm	inch mm	inch mm
5.0000 127.0000	10.0000 254.0000	0.0019 0.0483	0.0000 0.0000
10.0000 254.0000	18.0000 457.2000	0.0021 0.0533	0.0000 0.0000
18.0000 457.2000	26.0000 660.4000	0.0023 0.0584	0.0000 0.0000
26.0000 660.4000	34.0000 863.6000	0.0025 0.0635	0.0000 0.0000
34.0000 863.6000	44.0000 1,117.6000	0.0030 0.0762	0.0000 0.0000

Thrust Engineering Section continued

Crane Hook

Bore Diameter		Bore Tolerance		Height Tolerance	
over	incl	high (+)	low (-)	high (+)	low (-)
inch mm	inch mm	inch mm	inch mm	inch mm	inch mm
0.0000 0.0000	2.0156 51.1962	0.0100 0.2540	0.0000 0.0000	0.0000 0.0000	0.0080 0.2032
2.0156 51.1962	3.0156 76.5962	0.0100 0.2540	0.0020 0.0508	0.0000 0.0000	0.0100 0.2540
3.0156 76.5962	6.0156 152.7962	0.0150 0.3810	0.0020 0.0508	0.0000 0.0000	0.0150 0.3810
6.0156 152.7962	10.1560 257.9624	0.0150 0.3810	0.0050 0.1270	0.0000 0.0000	0.0200 0.5080

Outside Diameter		Outside Diameter Tolerance	
over	incl	high (+)	low (-)
inch mm	inch mm	inch mm	inch mm
2.5000 63.5000	4.0000 101.6000	0.0050 0.1270	0.0050 0.1270
4.0000 101.6000	6.0000 152.4000	0.0060 0.1524	0.0060 0.1524
6.0000 152.4000	10.0000 254.0000	0.0100 0.2540	0.0100 0.2540
10.0000 254.0000	34.0000 863.6000	0.0120 0.3048	0.0120 0.3048

Thrust Engineering Section continued

Tapered Roller Thrust

Bore Diameter		Bore Tolerance		Height Tolerance	
over	incl	high (+)	low (-)	high (+)	low (-)
inch mm	inch mm	inch mm	inch mm	inch mm	inch mm
0.0000 0.0000	12.0000 304.8000	0.0010 0.0254	0.0000 0.0000	0.0150 0.3810	0.0150 0.3810
12.0000 304.8000	24.0000 609.6000	0.0020 0.0508	0.0000 0.0000	0.0150 0.3810	0.0150 0.3810
24.0000 609.6000	36.0000 914.4000	0.0030 0.0762	0.0000 0.0000	0.0150 0.3810	0.0150 0.3810
36.0000 914.4000	48.0000 1,219.2000	0.0040 0.1016	0.0000 0.0000	0.0150 0.3810	0.0150 0.3810

Outside Diameter		Outside Diameter Tolerance	
over	incl	high (+)	low (-)
inch mm	inch mm	inch mm	inch mm
0.0000 0.0000	12.0000 304.8000	0.0010 0.0254	0.0000 0.0000
12.0000 304.8000	24.0000 609.6000	0.0020 0.0508	0.0000 0.0000
24.0000 609.6000	36.0000 914.4000	0.0030 0.0762	0.0000 0.0000
36.0000 914.4000	48.0000 1,219.2000	0.0040 0.1016	0.0000 0.0000

Thrust Engineering Section continued

Thrust Bearing Mounting

Suitable tolerances for the shaft and housings of the 600 and 700 series thrust bearings and the tapered thrust bearings are listed in the following tables. These tolerances will provide satisfactory radial guidance for the cylindrical and/or tapered thrust bearings. For further information on bearing mounting and installation, refer to page F-56 of this catalog

Cylindrical Thrust
Thrust Bearing Mounting Practice – Shaft and Housing Fits

Bearing		Shaft Diameter Deviation	
Bore Diameter		from Bore Diameter (-)	
over	incl	high	low
inch mm	inch mm	inch mm	inch mm
0.0000 0.0000	1.1250 28.5750	0.0005 0.0127	0.0015 0.0381
1.1250 28.5750	1.3125 33.3375	0.0006 0.0152	0.0016 0.0406
1.3125 33.3375	1.5000 38.1000	0.0007 0.0178	0.0017 0.0432
1.5000 38.1000	1.6875 42.8625	0.0008 0.0203	0.0018 0.0457
1.6875 42.8625	1.8750 47.6250	0.0009 0.0229	0.0019 0.0483
1.8750 47.6250	2.1250 53.9750	0.0010 0.0254	0.0020 0.0508
2.1250 53.9750	2.5000 63.5000	0.0011 0.0279	0.0021 0.0533
2.5000 63.5000	3.0000 76.2000	0.0012 0.0305	0.0022 0.0559
3.0000 76.2000	3.5000 88.9000	0.0013 0.0330	0.0023 0.0584
3.5000 88.9000	7.0000 177.8000	0.0015 0.0381	0.0025 0.0635
7.0000 177.8000	9.0000 228.6000	0.0015 0.0381	0.0030 0.0762
9.0000 228.6000	12.0000 304.8000	0.0018 0.0457	0.0033 0.0838
12.0000 304.8000	15.0000 381.0000	0.0020 0.0508	0.0035 0.0889
15.0000 381.0000	19.0000 482.6000	0.0020 0.0508	0.0040 0.1016
19.0000 482.6000	23.0000 584.2000	0.0025 0.0635	0.0045 0.1143
23.0000 584.2000	30.0000 762.0000	0.0030 0.0762	0.0055 0.1397

Thrust Engineering Section continued

Cylindrical Thrust
Thrust Bearing Mounting Practice – Shaft and Housing Fits continued

Bearing		Housing Diameter Deviation	
Outside Diameter		from Outside Diameter (+)	
over	incl	high	low
inch mm	inch mm	inch mm	inch mm
2.0000 50.8000	2.3750 60.3250	0.0015 0.0381	0.0005 0.0127
2.3750 60.3250	3.2500 82.5500	0.0017 0.0432	0.0007 0.0178
3.2500 82.5500	3.6875 93.6625	0.0019 0.0483	0.0009 0.0229
3.6875 93.6625	4.0000 101.6000	0.0021 0.0533	0.0011 0.0279
4.0000 101.6000	4.5312 115.0925	0.0028 0.0711	0.0013 0.0330
4.5312 115.0925	10.0000 254.0000	0.0030 0.0762	0.0015 0.0381
10.0000 254.0000	18.0000 457.2000	0.0040 0.1016	0.0020 0.0508
18.0000 457.2000	22.0000 558.8000	0.0050 0.1270	0.0025 0.0635
22.0000 558.8000	26.0000 660.4000	0.0055 0.1397	0.0025 0.0635
26.0000 660.4000	28.0000 711.2000	0.0060 0.1524	0.0030 0.0762
28.0000 711.2000	34.0000 863.6000	0.0070 0.1778	0.0030 0.0762
34.0000 863.6000	38.0000 965.2000	0.0080 0.2032	0.0035 0.0889
38.0000 965.2000	44.0000 1,117.6000	0.0090 0.2286	0.0040 0.1016

Thrust Engineering Section continued

Tapered Thrust
Thrust Bearing Mounting Practice – Shaft and Housing Fits

Bearing		Spring Loaded Shaft Diameter Deviation	
Bore Diameter		from Bore Diameter (-)	
over	incl	high	low
inch mm	inch mm	inch mm	inch mm
0.0000 0.0000	6.8750 174.6250	0.0000 0.0000	0.0010 0.0254
6.8750 174.6250	7.9999 203.1975	0.0000 0.0000	0.0010 0.0254
7.9999 203.1975	12.0000 304.8000	0.0000 0.0000	0.0015 0.0381
12.0000 304.8000	24.0000 609.6000	0.0000 0.0000	0.0020 0.0508
24.0000 609.6000	36.0000 914.4000	0.0000 0.0000	0.0025 0.0635
36.0000 914.4000	48.0000 1,219.2000	0.0000 0.0000	0.0030 0.0762

Bearing		Housing Diameter Deviation	
Outside Diameter		from Outside Diameter (+)	
over	incl	high	low
inch mm	inch mm	inch mm	inch mm
0.0000 0.0000	10.5000 266.7000	0.0025 0.0635	0.0010 0.0254
10.5000 266.7000	13.0000 330.2000	0.0030 0.0762	0.0010 0.0254
13.0000 330.2000	20.0000 508.0000	0.0040 0.1016	0.0020 0.0508
20.0000 508.0000	25.0000 635.0000	0.0045 0.1143	0.0020 0.0508
25.0000 635.0000	30.0000 762.0000	0.0060 0.1524	0.0030 0.0762
30.0000 762.0000	35.0000 889.0000	0.0070 0.1778	0.0030 0.0762

Thrust Engineering Section continued

When mounting thrust bearings, there exists the possibility of a slight press fit due to the acceptable tolerances of the bearing bore and outside diameters. Under no circumstances should a press fit exceeding the limits shown be used with the thrust plates, as any expansion or contraction in the plates due to fit could result in a misalignment in the plates and subsequent limited bearing life.

Cylindrical and tapered roller thrust bearings require the support surfaces in the housing and the shaft to be at right angles to the shaft axis within .0005 inch per inch of diameter. For example, a four inch diameter shaft should be square to the shaft shoulder within .002 inches. The support surfaces should also provide for continuous support for the bearing thrust plates across the extent of the raceways. As a general rule, the minimum shaft shoulder and maximum housing shoulder should be as follows:

- Shaft shoulder at a minimum should be equal to the outside diameter of the shaft plate.
- Housing shoulder must have a maximum diameter to not exceed the inside diameter of the housing plate.

The tapered thrust bearing plates are manufactured with the same inside diameter and outside diameter on both plates. Applications using these bearings must be designed with ample clearance between the outside diameter of the shaft plate and the housing. Clearance must also be designed between the inside diameter of the housing plate and the shaft. It is recommended to provide for clearances of approximately .030 inches.

Tandem thrust bearings are designed to allow for the use of minimal shaft and housing shoulders. The cantilevering action of the thrust plates use of compression sleeves enable these bearings to be used effectively where only minimal shaft and housing shoulders exist.

Tandem Thrust Bearing Minimum Load

Tandem thrust bearings are designed to be used in horizontal shaft applications such as an extruder gear drive, and it is essential that a sufficient thrust load is applied to prevent roller skid. The minimum load required for tandem thrust bearings is expressed as a ratio of the bearing's dynamic rating (C) to the applied load (P). For ideal bearing operation, the C/P ratio should be less than 8. Bearing loads creating a C/P ratio greater than 12 must be avoided.

Lubrication

The required viscosity for the lubricant on cylindrical thrust bearings is 125 SSU at operating temperature. The required viscosity for the lubricant on tapered thrust bearings is 160 SSU at operating temperature. The required viscosity for the lubricant on tandem thrust bearings is 160 SSU at operating temperature. For further information in regards to thrust bearing lubrication please refer to page A-17 of this catalog.

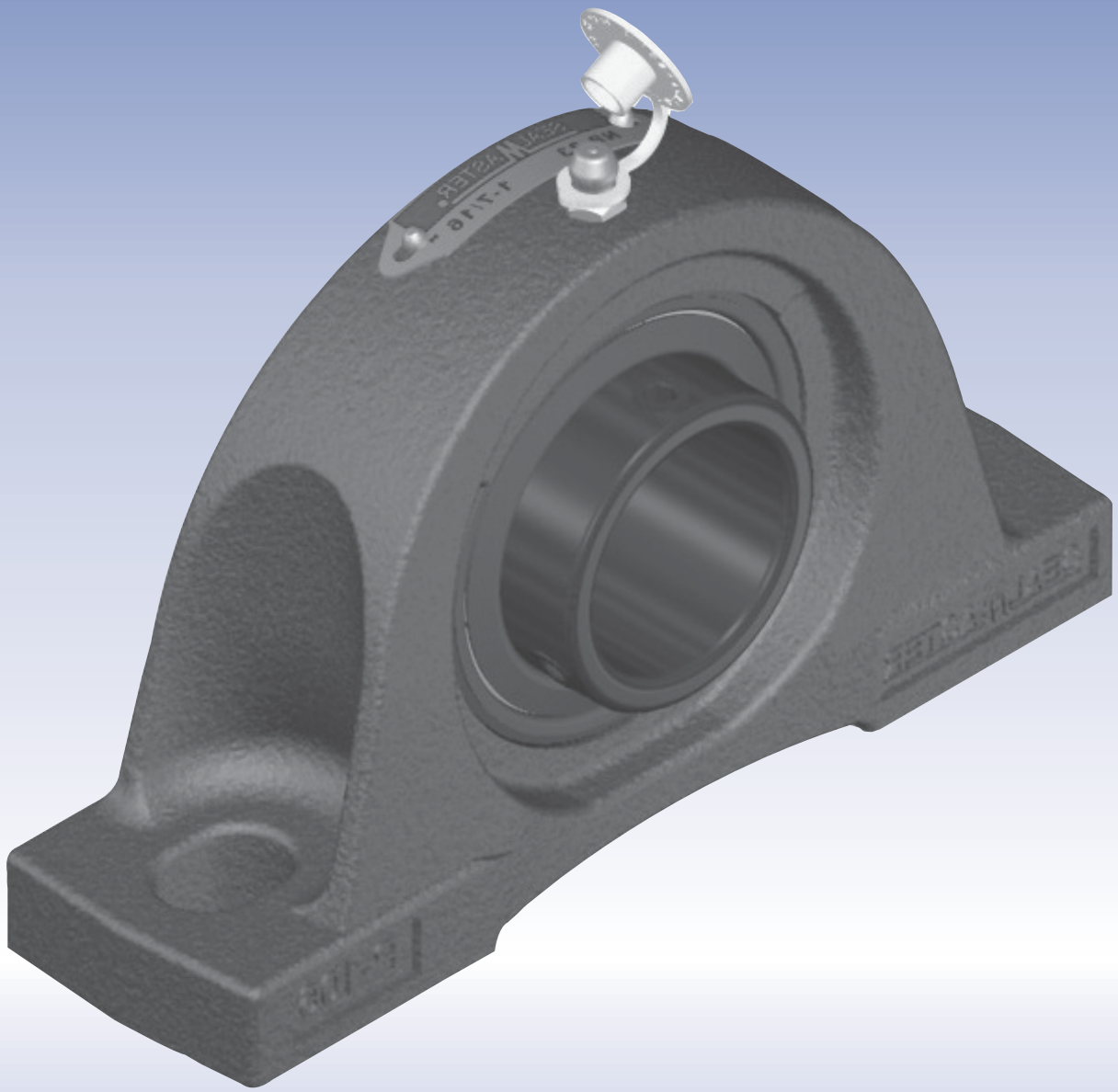

Mounted Ball Bearings

Modular bearing assembly consisting of sealed and lubricated inch or metric ball bearing contained within a variety of housings types, locking mechanisms, mounting styles, and housing materials. Mounted ball bearings provide an anti-friction solution when supporting rotating shafts with radial loads.

Housing Styles

Pillow Block, Flanges, Take Up Assemblies

Locking Styles

Setscrew, Double Setscrew, Concentric And Eccentric

Bore Diameter Size Range

½” To 4 15/16” And 20 mm To 100 mm

Housing Materials

Cast & Ductile Iron, Stamped Steel

Browning® SEALMASTER® Mounted Ball Bearings

Mounted Ball Bearing Selection Guide

					Lock Type		
Brand	Image	Series	Housing Style	Duty	Setscrew	Concentric	Double Setscrew
Sealmaster		NP	Two Bolt Pillow Block - High Base	Standard	NP	NP-T	NPD
		NPL	Two Bolt Pillow Block - Low Base	Standard	NPL	NPL-T	
		SP	Two Bolt Pillow Block - Heavy Duty	Standard	SP	SP-T	SPD
		MP	Two Bolt Pillow Block - High Base	Medium	MP	MP-T	MPD
		MFP	Four Bolt Pillow Block - High Base	Medium	MFP		MFPD
		MSPD	Two Bolt Pillow Block - Heavy Duty	Medium			MSPD
		MSFPD	Four Bolt Pillow Block - Heavy Duty	Medium			MSFPD
		SPM	Two Bolt Pillow Block - Heavy Duty	Medium	SPM		
		TB	Tapped Base Pillow Block	Standard	TB	TB-T	
		SF	Four Bolt Flange	Standard	SF	SF-T	
		MSF	Four Bolt Flange	Medium	MSF	MSF-T	
		SFT	Two Bolt Flange	Standard	SFT	SFT-T	
		MSFT	Two Bolt Flange	Medium	MSFT	MSFT-T	

Housing Material	Standard Seal	Seal Options	Size Range: Inch	Size Range: Metric	Section Name	Pages
Cast Iron	Felt	Contact	1/2” - 2 15/16”	20mm - 75mm	Performance Mounted Ball Bearings	G-31 to G-33
			1/2” - 2 11/16”	20mm - 60mm		G-34 to G-35
			13/16” - 3 7/16”	36mm - 80mm		G-36 to G-38
			15/16” - 4”	25mm - 100mm		G-39 to G-41
			1 15/16” - 5”	50mm - 100mm		G-42 to G-43
			1 11/16” - 4 15/16”	N/A		G-44
			1 15/16” - 4 15/16”	N/A		G-45
			1 3/16” - 2 1/2”	N/A		G-46
			1/2” - 2”	20mm - 50mm		G-47 to G-48
			1/2” - 2 15/16”	20mm - 75mm		G-49 to G-50
			15/16” - 4 15/16”	25mm - 100mm		G-51 to G-52
			1/2” - 2 3/16”	20mm - 55mm		G-53 to G-54
			15/16” - 2”	25mm - 50mm		G-55 to G-56

Browning® SEALMASTER® Mounted Ball Bearings

Mounted Ball Bearing Selection Guide

					Lock Type		
Brand	Image	Series	Housing Style	Duty	Setscrew	Concentric	Double Setscrew
Sealmaster		FB	Flange Bracket	Standard	FB	FB-T	
		SFC	Piloted Flange Cartridge	Standard	SFC	SFC-T	
		MFC	Piloted Flange Cartridge	Medium	MFC	MFC-T	MFCD
		SEHB	Hanger Bearing External Lube	Varies	SEHB	SEHB-T	SEHBD
		SCHB	Hanger Bearing Internal Lube	Varies	SCHB		
		SC	Cylindrical Cartridge	Standard	SC	SC-T	
		MSC	Cylindrical Cartridge	Medium	MSC	MSC-T	
		ST	Wide Slot Take Up	Standard	ST	ST-T	
		MST	Wide Slot Take Up	Medium	MST	MST-T	
		STH	Center Pull Take Up Frame	Standard	STH		
		MSTH	Center Pull Take Up Frame	Medium	MSTH		
		TF/TFS	Top Mount Take Up Frame	Standard			
		TFT-T	Two Bolt Flange	Standard		TFT-T	

Housing Material	Standard Seal	Seal Options	Size Range: Inch	Size Range: Metric	Section Name	Pages
Cast Iron	Felt	Contact	1/2” - 2”	20mm - 50mm	Performance Mounted Ball Bearings	G-57 to G-58
			1 1/8” - 3 3/16”	30mm - 80mm		G-59 to G-60
			15/16” - 4”	25mm - 100mm		G-61 to G-63
Ductile Iron			15/16” - 4”	25mm - 100mm		G-64 to G-66
			15/16” - 4”	25mm - 100mm		G-67
Cast Iron			1/2” - 2 15/16”	20mm - 75mm		G-68 to G-69
			15/16” - 4”	25mm - 100mm		G-70 to G-71
			1/2” - 3 7/16”	20mm - 80mm		G-72 to G-73
			15/16” - 4”	25mm - 100mm		G-74 to G-75
N/A	N/A	N/A	7/8” - 2 15/16”	25mm - 75mm		G-76 to G-78
			1 11/16” - 2 1/2”	N/A		G-79
			7/8” - 2 3/16”	25mm - 55mm		G-80 to G-82
Ductile Iron	Felt	Contact	15/16” - 1 7/16”	N/A		G-83

Browning® SEALMASTER® Mounted Ball Bearings

Mounted Ball Bearing Selection Guide

					Lock Type		
Brand	Image	Series	Housing Style	Duty	Setscrew	Concentric	Double Setscrew
Sealmaster		SRF	Rubber Mounted Flange	Light	SRF		
		SRP	Rubber Mounted Pillow Block	Light	SRP		
		SRC	Rubber Mounted Cartridge	Light	SRC		
		RB	Rubber Mount Insert	Light	RB		
		AR-2	Expansion Insert	Standard	AR-2	AR-2-T	
		AR-3	Expansion Insert	Medium	AR-3	AR-3-T	
		2-	Insert	Standard	2-	2-T	2-D
		3-	Insert	Medium	3-	3-T	3-D
		ER	Cylindrical O.D. Insert	Standard	ER	ER-T	
		NPMH	Pillow Block	Standard	NPMH	NPMH-T	
		TBMH	Tapped Base Pillow Block	Standard	TBMH	TBMH-T	
		SFMH	Four Bolt Flange	Standard	SFMH	SFMH-T	
		SFTMH	Two Bolt Flange	Standard	SFTMH	SFTMH-T	

Housing Material	Standard Seal	Seal Options	Size Range: Inch	Size Range: Metric	Section Name	Pages
Stamped Steel	Felt	Contact	1/2” - 1 1/4”	N/A	Performance Mounted Ball Bearings	G-84
			1/2” - 1 1/4”	N/A		G-85
Rubber			1/2” - 1 1/4”	N/A		G-86
N/A			1/2” - 1 1/4”	N/A		G-87
Brass			1/2”-3 1/2”	20mm - 90mm		G-88 to G-89
			15/16” - 4”	25mm - 100mm		G-90 to G-91
N/A			1/2” - 3 1/2”	20mm - 90mm		G-92 to G-94
			15/16” - 4 15/16”	25mm - 100mm		G-95 to G-97
			1/2” - 4”	20mm - 80mm	Performance Cylindrical O.D. Bearings (ER)	G-107 to G-108
Cast Iron	Contact Seal + Flinger	N/A	1” - 2 3/16”	N/A	Material Handling Bearings	G-113 to G-114
			1” - 1 15/16”	N/A		G-115 to G-116
	Contact + Flinger		1” - 2 7/16”	N/A		G-117 to G-118
			1” - 2 3/16”	N/A		G-119 to G-120

Browning® SEALMASTER® Mounted Ball Bearings

Mounted Ball Bearing Selection Guide

					Lock Type		
Brand	Image	Series	Housing Style	Duty	Setscrew	Concentric	Double Setscrew
Sealmaster		FBMH	Flange Bracket	Standard	FBMH	FBMH-T	
		STMH	Wide Slot Take Up	Standard	STMH	STMH-T	
		MH	Insert	Standard	MH	MH-T	
	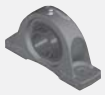	PVR-x3xx	Pillow Block	Varies			
		PVR-x4xx	Tapped Base Pillow Block	Varies			
		PVR-x5xx	Four Bolt Flange	Varies			
		PVR-x6xx	Two Bolt Flange	Varies			
		PVR-x1xx	Piloted Flange Cartridge	Varies			
		PVR-x2xx	Hanger Bearing	Varies			
		PVR-x7xx	Cylindrical Cartridge	Varies			

Housing Material	Standard Seal	Seal Options	Size Range: Inch	Size Range: Metric	Section Name	Pages
Cast Iron	Contact + Flinger	N/A	1” - 1 15/16”	N/A	Material Handling Bearings	G-121 to G-122
			1” - 2 3/16”	N/A		G-123 to G-124
N/A			1” - 2 7/16”	N/A		G-125 to G-126
Varies	Varies		1 1/8” - 1 3/4”	N/A	Paver Bearings	G-130
			1” - 2”	N/A		G-131
			1 1/2” 2 11/16”	N/A		G-132
			1 7/16” - 2”	N/A		G-133
			1 15/16” - 2 3/16”	N/A		G-134
			2” - 2 11/16”	N/A		G-135
			1 3/4”	N/A		G-136

Mounted Ball Bearing Selection Guide

					Lock Type		
Brand	Image	Series	Housing Style	Duty	Setscrew	Concentric	Eccentric
Browning		VP 100	Two Bolt Pillow Block - High Base	Intermediate	VPS 100		VPE 100
		VP 200	Two Bolt Pillow Block - High Base	Standard	VPS 200	VPB 200	VPE 200
		VP 300	Two Bolt Pillow Block - High Base	Medium	VPS 300	VPB 300	
		VPL 100	Two Bolt Pillow Block - Low Base	Intermediate	VPLS 100		VPLE 100
		VPL 200	Two Bolt Pillow Block - Low Base	Standard	VPLS 200	VPLB 200	VPLE 200
		VPD 200	Two Bolt Pillow Block - Alternate Base	Standard	VPDS 200		
		VTB 100	Tapped Base Pillow Block	Intermediate			VTBE 100
		VTB 200	Tapped Base Pillow Block	Standard	VTBS 200	VTBB 200	
		VF4 100	Four Bolt Flange	Intermediate	VF4S 100		VF4E 100
		VF4 200	Four Bolt Flange	Standard	VF4S 200	VF4B 200	VF4E 200
		VF4 300	Four Bolt Flange	Medium	VF4S 300	VF4B 300	
		VF2 100	Two Bolt Flange	Intermediate	VF2S 100		VF2E 100
		VF2 200	Two Bolt Flange	Standard	VF2S 200	VF2B 200	VF2E 200

Housing Material	Standard Seal	Seal Options	Size Range: Inch	Size Range: Metric	Section Name	Pages
Cast Iron	Contact	N/A	1/2” - 2 3/16”	N/A	Mounted Ball Bearings	G-145 to G-146
	Contact + Flinger		1/2” - 2 15/16”	20 mm - 60 mm		G-147 to G-150
			1” - 2 3/16”	N/A		G-151 to G-152
	Contact		1/2” - 2 3/16”	N/A		G-153 to G-154
	Contact + Flinger		1/2” - 2 7/16”	N/A		G-155 to G-157
			1 3/16” - 1 1/2”	N/A		G-158
	Contact		3/4” - 2”	N/A		G-159
	Contact + Flinger		1/2” - 2”	20mm - 50mm		G-160 to G-162
	Contact		1/2” - 2 3/16”	N/A		G-163 to G-164
	Contact + Flinger		1/2” - 2 7/16”	20mm - 60mm		G-165 to G-168
			1” - 2 3/16”	N/A		G-169 to G-170
	Contact		1/2” - 2 3/16”	N/A		G-171 to G-172
	Contact + Flinger		1/2” - 2 7/16”	20mm - 60mm		G-173 to G-176

Browning® SEALMASTER® Mounted Ball Bearings

Mounted Ball Bearing Selection Guide

					Lock Type		
Brand	Image	Series	Housing Style	Duty	Setscrew	Concentric	Eccentric
Browning		VF2 300	Two Bolt Flange	Medium	VF2S 300	VF2B 300	
		VFB 200	Flange Bracket	Standard	VFBS 200	VFBB 200	
		VFC 200	Piloted Flange Cartridge	Standard	VFCS 200	VFCB 200	
		VFC 300	Piloted Flange Cartridge	Medium	VFCS 300	VFCB 300	
		VTW 100	Wide Slot Take Up	Intermediate	VTWS 100		VTWE 100
		VTW 200	Wide Slot Take Up	Standard	VTWS 200		VTWE 200
		VTW 300	Wide Slot Take Up	Medium	VTWS 300		
		SF	Center Pull Take Up Frame	Standard	xSFxx		
		TF/TFS	Top Mount Take Up Frame	Standard	xTFSxx		
		VP 100M	Pillow Block	Intermediate	VPS100-M		
		VF2 100M	Two Bolt Flange	Intermediate	VF2S100-M		
		VF3 100M	Three Bolt Flange	Intermediate	VF3S100-M		
		SSP 100	Pillow Block	Light	SSPS 100		

Housing Material	Standard Seal	Seal Options	Size Range: Inch	Size Range: Metric	Section Name	Pages
Cast Iron	Contact + Flinger	N/A	1” - 2”	N/A	Mounted Ball Bearings	G-177 to G-178
			3/4” - 2”			G-179 to G-180
			1 1/8” - 2 7/16”			G-181 to G-182
			1” - 2 1/4”			G-183 to G-184
	Contact		3/4” - 2 3/16”			G-185 to G-186
	Contact + Flinger		1/2” - 2 7/16”			G-187 to G-188
			1” - 2 1/4”			G-189
N/A	N/A		1/2” - 2 7/16”			G-190
			3/4” - 2 7/16”			G-191
Ductile Iron	Contact		1/2” - 1 7/16”			G-192
			1/2” - 1 7/16”			G-193
			1/2” - 1 7/16”			G-194
Stamped Steel			7/8” - 1 1/4”			G-195

Browning® SEALMASTER® Mounted Ball Bearings

Mounted Ball Bearing Selection Guide

					Lock Type		
Brand	Image	Series	Housing Style	Duty	Setscrew	Concentric	Eccentric
Browning		SSRP 100	Pillow Block	Light	SSRPS 100		
		SSF4 100	Four Bolt Flange	Light	SSF4S 100		
		SSF3 100	Three Bolt Flange	Light	SSF3S 100		
		SSF3T 100	Three Bolt Flange	Light	SSF3TS 100		
		SSF2 100	Two Bolt Flange	Light	SSF2S 100		
		RUBR 100	Rubber Grommet	Light	RUBRS 100	RUBRB 100	RUBRE 100
		SL 100	Cylindrical O.D. Insert	Light	SLS 100		
		L 100	Insert	Light	LS 100		
		LR 100	Insert	Light	LRS 100		
		V 100	Insert	Intermediate	VS 100		VE 100
		V 200	Insert	Standard	VS 200	VB 200	VE 200
		V 300	Insert	Medium	VS 300	VB 300	
		VER 200	Cylindrical O.D. Insert	Standard	VER 200		

Housing Material	Standard Seal	Seal Options	Size Range: Inch	Size Range: Metric	Section Name	Pages
Stamped Steel with Rubber Grommet	Contact	N/A	3/4" - 1"	N/A	Mounted Ball Bearings	G-196
Stamped Steel			1 1/2" - 1 15/16"			G-197
			3/4" - 1 7/16"			G-198
			3/4" - 1 1/4"			G-199
			1/2" - 1 1/4"			G-200
Rubber			1/2" - 1"			G-201 to G-202
N/A			1/2" - 1 1/2"			G-203
			1/2" - 1 15/16"			G-204
			3/4" - 1 1/4"			G-205
			1/2" - 2 3/16"			G-206 to G-207
	Contact + Flinger		1/2" - 2 7/16"	20mm - 60mm		G-208 to G-211
			1" - 2 3/16"	N/A		G-212 to G-213
			1/2" - 2 7/16"		Cylindrical O.D. Insert Bearings	G-218

Sealmaster Gold Mounted Ball Bearings

Sealmaster Gold mounted ball bearings feature a wide outer race insert bearing with land riding metallic retainer. The black oxide treated bearing steel insert features an exclusive lock pin and dimple system providing a direct path for lubrication into the bearing, and prevents outer ring rotation within the housing. Shaft lock is achieved by either setscrew or Skwezloc® concentric locking collar. The felt seal with flinger provide a good balance between contaminant entry, GoldPlex® HP grease loss and friction. Depending on your preference, these bearings are available in both inch and metric shaft sizes with a wide variety of cast iron, stamped steel or rubber mount housings, sealing, and lubrication options or industry specific solutions as illustrated on the pages to follow.

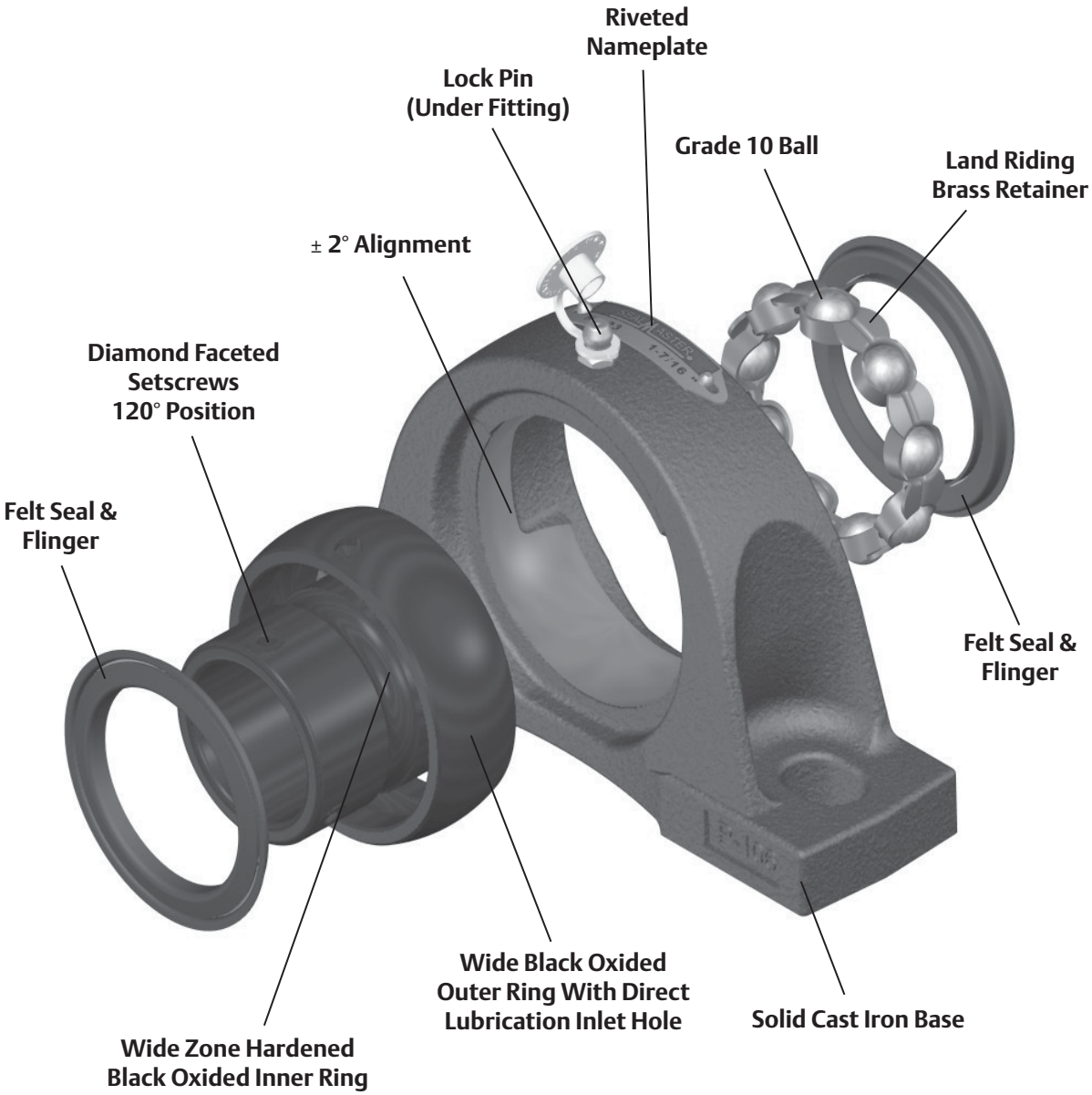

Sealmaster Gold Mounted Ball Nomenclature
Housing Units

Prefix
- E - Expansion Unit

Housing* (see table below)

D - Double Setscrew Locking

Bore Size
- Inch - ##/16 (ex. 20/16 = 1 1/4")
  - R for 1 1/4" and 2" Reduced Only
- Metric - Standard Duty - 2##, ## x 5 mm (ex. 05 = 25 mm)
  - Medium Duty - 3##, ## x 5 mm (ex. 07 = 35 mm)

Standard Option
- T - Skwezloc® Locking Collar
- M - Metric Hardware (Metric-SKWEZ™)
- C - Contact Seal

Common Options* (see table below)

E NP D-20 T CXU

*Housing	Housing Style	Bearing Duty
FB	Flange Bracket	Standard
MFC	Piloted Flange Cartridge	Medium
MFP	Four Bolt Pillow Block - High Base	Medium
MP	Pillow Block - High Base	Medium
MSC	Cylindrical Cartridge	Medium
MSF	Four Bolt Flange	Medium
MSFPD	Four Bolt Pillow Block - High Base	Medium
MSFT	Two Bolt Flange	Medium
MSPD	Four Bolt Pillow Block - High Base	Medium
MST	Wide Slot Take Up	Medium
NP	Pillow Block - High Base	Standard
NPL	Pillow Block - Low Base	Standard
RB	Rubber Mount Insert Only	Standard
SC	Cylindrical Cartridge	Standard
SF	Four Bolt Flange	Standard
SFC	Piloted Flange Cartridge	Standard
SFT	Rubber Mounted Flange	Standard
SP	Pillow Block - Heavy Duty	Standard
SPM	Pillow Block - High Base	Medium
SRC	Rubber Mounted Cartridge	Standard
SRF	Rubber Mounted Flange	Standard
SRP	Rubber Mounted Pillow Block	Standard
ST	Wide Slot Take Up	Standard
TB	Tapped Base Pillow Block	Standard
TFT	Two Bolt Flange	Standard

*Common Options	
2C	Double Lip Contact Seal - replaced by DRT in most Sizes
3C	Trip Lip Contact Seal - replaced by DRT in most sizes
AS	Backed Off Felt Seal
BF	Spring Seal - Spring Out
CXU	Air Handling
DRT	High Contamination
H	High Performance Seal
HI	High Temperature Krytox*** Grease
HS	High Speed
HT	High Temperature
HTA	High Temperature Air Handling
HTC	High Temperature Contact Seal
LO	Low Drag
RM	Reduced Maintenance
SF	Double Lip Contact Seal
U	Spring Seal - Spring In
VA	FKM Spring Seal - Spring In
VS	FKM Spring Seal - Spring Out
X	Labyrinth Seal
XLO	Extra Low Drag

**Not all configurations available in all sizes. Prior to selection consult Bearing Application Engineer for proper option selection for your application and consult engineering sections for speed limits.

***KRYTOX is a registered trademark of E.I. du Pont de Nemurs and Company. This trade name, trademark and/or registered trademark is property of their respective owner and is not owned or controlled by Regal Power Transmission Solutions.

Sealmaster Gold Mounted Ball Nomenclature

Inserts

Prefix
- AR - Standard Expansion Ring

Bearing
- 2 - Inch Standard Duty
- 3 - Inch Medium Duty
- 52 - Metric Standard Duty
- 53 - Metric Medium Duty

Bore Size
- Inch - First Digit - Number of Inches
  - Second & Third Digit - Number of 1/16" of Inches (ex. 215 = 2 15/16")
- Metric - ## x 5 mm (05 = 25 mm)

Standard Option
- C - Contact Seal
- D - Double Setscrew
- T - Skwezloc® Locking Collar
- M - Metric Hardware (Metric-SKWEZ™)

Common Options* (see table below)

AR - 2 - 215 - T - DRT

***Common Options**

2C	Double Lip Contact Seal - replaced by DRT in most Sizes	**LO**	Low Drag
3C	Trip Lip Contact Seal - replaced by DRT in most sizes	**M**	Metric Hardware (Metric-SKWEZ only)
AS	Backed Off Felt Seal	**RM**	Reduced Maintenance
BF	Spring Seal - Spring Out	**SF**	High Temperature Double Lip Contact Seal
DRT	High Contamination	**U**	Spring Seal - Spring In
H	High Performance Seal	**VA**	FKM Spring Seal - Spring In
HI	High Temperature Krytox** Grease	**VS**	FKM Spring Seal - Spring Out
HS	High Speed	**X**	Labyrinth Seal
HT	High Temperature	**XLO**	Extra Low Drag
HTC	High Temperature Contact Seal		

Specials

Prefix
- S - Housing Assembly
- SK - Bearing Insert

Sequential Number

SK - ####

*Note: Configurations are not available in all sizes or housing styles. Consult the product tables, option sections and engineering sections for more detail or consult a Bearing Application Engineer.

**KRYTOX is a registered trademark of E.I. du Pont de Nemurs and Company. This trade name, trademark and/or registered trademark is property of their respective owner and is not owned or controlled by Regal Power Transmission Solutions.

Sealmaster Gold Mounted Ball Nomenclature

Center Pull Take Up Frame Assemblies

STH - 20T - 18

Frame Design
- STH - Center Pull Take Up Frame, ST Series Bearing
- MSTH - Center Pull Take Up Frame, MST Series Bearing

Bore Size
- Inch - ##/16 (ex. 20/16 = 1 1/4”)
  - R for 1 1/4” and 2” Reduced Only
- Metric - Standard Duty - 2##, ## x 5 mm (ex. 05 = 25 mm)
  - Medium Duty - 3##, ## x 5 mm (ex. 07 = 35 mm)

Standard Options
- T - Skwezloc® Locking Collar
- C - Contact Seal

Adjustment Length
- 6 - 6"
- 9 - 9"
- 12 - 12"
- 18 - 18"

Top Mount Take Up Frame Only

6 TF 16

Adjustment Length
- 1 - 1 1/2”
- 3 - 3”
- 6 - 6”
- 9 - 9”
- 12 - 12”
- 18 - 18”

Frame Design
- TF/TFS - Top Mount Protected Screw Take Up

Frame Series

Bore Size	Frame Size
3/4” to 1”	16
1 1/18” to 1 7/16”	23
1 1/2” to 2”	31
2” to 2 3/16”	39

Features and Benefits

Wide Outer Ring

Sealmaster has the industry's widest outer ring. The black oxided outer ring is 20 to 30% wider than industry standard outer rings. This feature results in increased grease capacity, and room for improved sealing options. A wider outer ring has increased surface area contact with the housing to better absorb shock load.

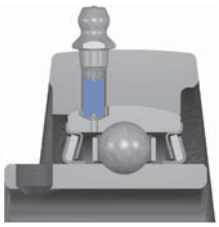

Lock Pin and Dimple

The Sealmaster exclusive locking pin and dimple system provides a direct lubricant path into the bearing cavity & ball path instead of around a lubrication groove. The pin also prevents outer ring rotation (sometimes referred to as "creep"), and allows ±2° static misalignment of the bearing insert.

Multiple Sealing Options
Felt Seal with Flinger

The standard felt seal provides a tight labyrinth seal which retains lubrication and acts as a filter to exclude contamination. The external stamping is a flinger which shields the felt from large contaminants and directs them away from the sealing surface. The design operates with less drag and less heat generation than rubber contact seals.

Single Lip Contact Seal

Single Lip Contact Seal consists of a nitrile rubber washer in metal shroud to shield the lip from large contaminants. The seal is designed to balance drag and protection in wet and dry environments. This can be specified by adding the suffix C to the part number.

Additional Sealing Options can be found in the Custom Select section on pages G-24 to G-27.

Multiple Locking Methods
Setscrew Locking

120° spaced, balanced three point contact minimizes inner ring distortion vibration, reduces noise, and improves reliability. Precision manufactured diamond faceted setscrews contribute to improved clamping and resistance to back out.

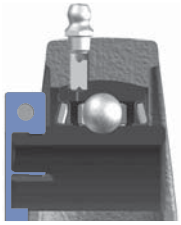

Skwezloc® Concentric Locking Collar

SKWEZLOC is a concentric locking collar clamp design that results in near-perfect concentricity of the shaft to bearing bore and maintains near perfect ball path roundness, while reducing fretting corrosion. This design eliminates the shaft damage of setscrew locking, and minimizes bearing induced vibration for smoother quieter operation. The collar has a TORX head cap screw that outlasts stripping 12 times longer than hex head cap screws.

Features and Benefits continued

Zone Hardened Inner Race

Sealmaster incorporates a unique heat treat process that hardens the inner race only where it is needed...under the ball path. The black oxided zone hardened inner race results in improved lock reliability as a result of less distortion at the setscrew location and improved thread conformity resulting in improved clamping and resistance to setscrew back-out

Land Riding Retainer

The Sealmaster unique land riding metal retainer design provides superior pocket clearance that allows for 360° grease circulation around the rolling elements resulting in better retained and utilized lubrication. The land riding design of the retainer minimizes wear on both Ball and retainer, while maximizing stability, which is especially important in applications involving vibration, shock loading or high operating speeds.

Solid Base

Solid bases are standard on Sealmaster Gold ball bearing pillow blocks. The solid base provides improved stability, resistance to shock and vibration and prevents frame buckling under base compared to semi-solid and hollow mounting bases.

Housing Fit

All bearings are assembled with a controlled housing fit between the bearing outer ring and housing bore. This fit allows the bearing to properly self-align in common industrial applications. Special fits are available based on your specific application need.

Nameplate

Metal nameplate riveted to the housing allows for easy identification even after years of operation.

Options

Sealmaster Gold Mounted Ball Bearing Options

Bearings are typically selected using L10 fatigue life calculations based on ideal operating conditions. However, most bearing problems are not fatigue related, but occur due to contamination, lubrication starvation, or other environmental issues. As a result, our engineers have developed custom solutions to meet the varying severity, operating parameters and maintenance regularity, such as Reduced Maintenance and Custom Select.

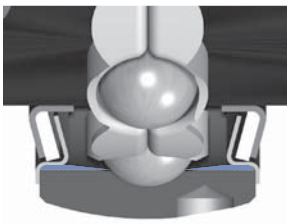

Reduced Maintenance "RM"

Sealmaster Reduced Maintenance bearings are the result of a patented Tapered Lands bearing race profile which means that critical lubricant is circulated more efficiently, while requiring no regular service intervals. The bearing are supplied from the factory with a plug instead of a lubrication fitting.

The outer land surface in a conventional bearing is parallel to the axis of the inner ring. The Tapered Lands surface is tapered in a radial direction toward the bearing race. This subtle yet crucial design change allows lubricant to more easily flow back to the raceway. With improved bearing lubricant circulation comes significantly longer bearing service life. This improved circulation and service life comes without any reductions in bearing radial or thrust capacities.

* For bearings that are maintained and relubricated on a regular basis, there is no significant difference in expected service life.

Custom Select

Sealmaster Custom Select options are available in popular shaft sizes from ½" to 2 7/16" in common housing configurations.

High Temperature

Suffix	Description	Temperature	Environment	Speed Limits
HT*	Standard High Temp	200°F to 400°F	Dry/Dusty	pages G-235 to G-240
HI*	High Performance High Temp			
HTA*	High Temp Air Handling			
HTC*	High Temp Contact Seal		Wet/Moisture	

*For expansion units add an E prefix (example: ENP-23 HTA). Information on expansion units can be found on page G-29.

High Temperature "HT"

High temperature bearing with increased radial internal clearance to accommodate thermal expansion of components and Nomex* seal and high temperature synthetic grease.

High Performance High Temperature "HI"

High temperature bearing with increased radial internal clearance to accommodate thermal expansion of components and Nomex** seal and Krytox* 226 grease. Available in expansion version in some sizes with half-dog and wire, suffix "HIY", see page G-104 for more information.

High Temperature Air Handling "HTA"

Utilizes the same features as our high temperature "HT" option with the additional features that are important in Air Handling equipment:

- Controlled air handling housing fit that allows the bearing to properly self-align when mounted on light weight frames
- Two stage noise testing verification procedure for quiet operation
- For standard operating temperatures, consider the Air Handling "CXU" option shown on following pages

High Temperature Contact Seal "HTC"

High temperature bearing with increased radial internal clearance to accommodate thermal expansion of components, single lip silicone fiberglass or FKM spring seal and high temperature synthetic grease.

Custom Select continued

High Contamination

Suffix	Description	Temperature	Environment	Speed Limits
DRT	Highly Contaminated	-40°F to 200°F	Highly Contaminated	pages G-235 to G-240

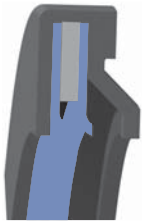

2C Seal

3C Seal

High Contamination "DRT"

Heavy Duty Multi-Lip contact seal (depending on size and series, either supplied with "2C" double lip or "3C" triple lip seal), 100% Grease Fill with Sealmaster GoldPlex HP Grease.

High Speed

Suffix	Description	Temperature	Environment	Speed Limits
HS	High Speed	-40°F to 200°F	Dry/Dusty	pages G-235 to G-240

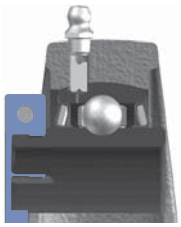

High Speed "HS"

- Available in SKWEZLOC locking collar only
- Backed off, felt seal reduces contact area between the felt sealing material and the internal metal flinger
- Controlled air handling housing fit that allows the bearing to properly self-align when mounted on lightweight frames
- Increased radial internal clearance to accommodate radial thermal expansion of components

Custom Select continued

Air Handling

Suffix	Description	Temperature	Environment	Speed Limits
CXU	Air Handling	-40°F to 200°F	Dry/Dusty	pages G-235 to G-240
HTA*	High Temp Air Handling	200°F to 400°F		

*For expansion units add an E prefix to unit assembly (example: EMP-23 HTA)

Air Handling "CXU"

Utilizes many of the same features as standard Sealmaster Gold Mounted Ball Bearings but designed and manufactured for Air Handling equipment.

- Controlled air handling housing fit that allows the bearing to properly self-align when mounted on lightweight frames
- Available with the standard Sealmaster felt seal for decreased energy consumption
- Two stage noise testing verification procedure for quiet operation

High Temperature Air Handling "HTA"

Features listed on page G-24

Custom Select continued

Low Drag

Suffix	Description	Temperature	Environment	Speed Limits
LO	Low Drag	-20°F to 180°F	Dry/Dusty	pages G-235 to G-240
XLO	Extra Low Drag	-20°F to 100°F		

Low Drag "LO"

- Felt seal cut down to reduce drag
- Provides excellent barrier that works to retain grease and acts as a filter to reduce the ingress of debris contaminants
- Features a channeling grease that reduces drag while lubricating the bearing
- A reduced housing fit to allow for the bearing to properly self-align on light weight frames

X-Tra Low Drag "XLO"

- Felt seal cut down and oil soaked for extra low drag
- Oil lubricated and supplied with an adapter and plug for easy field relubrication
- A reduced housing fit to allow for the bearing to properly self-align on light weight frames

Bearing Rotational Torque - Comparison Chart

	Company	Suffix Option	Seal Type	Lubrication
LO Drag Bearing Options	AMI®	FS	Non-Contact	Oil
	Sealmaster	XLO	Low Drag Felt	Oil
	MB®	HFF	Steel Labyrinth	Oil
	Peer®	ZSFF	Steel Labyrinth	Oil
	Sealmaster	LO	Low Drag Felt	Grease
	MB	MHFF	Steel Labyrinth	Grease
	FYH®	DSK3	Non-Contact	Oil
	Peer	ZMKFF	Steel Labyrinth	Grease
Standard Bearing Drag (Reference)	Sealmaster	-	Felt	Grease
	Sealmaster	C	Contact	Grease

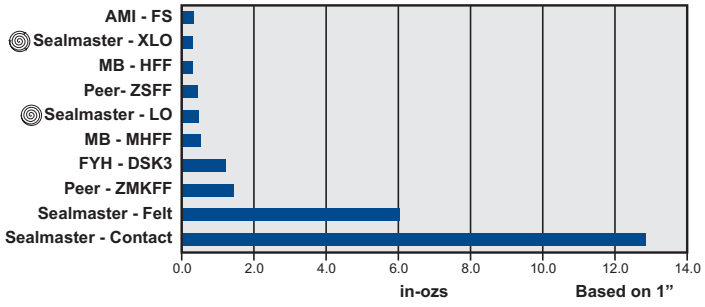

Custom Select continued

Optional Fittings

Suffix	Description
CSK	90° Grease Fitting
CSJ	45° Grease Fitting
CTJ	Adapter and Plug
CTY	Plug
W	Adapter and Grease Fitting

CSK – 90° Grease Fitting

CSJ – 45° Grease Fitting

CTJ – Adaptor and Plastic Plug

CTY - Plug

W – Adaptor and Grease Fitting

Note:

- Fittings are designed to properly position the lock pin anti-rotation device. Other fittings not designed for Sealmaster brand bearings may not provide this function causing reduced bearing life.
- Fittings are factory adjusted to properly position the lock pin anti-rotation device. Improper field adjustment of the fitting may cause reduced bearing life. Consult Bearing Technical Services for proper adjustment techniques or review installation instructions.
- For specific hole sizes per housing assembly refer to section L - Accessories.

Additional Options

Expansion Units Options

Axial shaft expansion is compensated by a non-expansion (fixed) and expansion (float) arrangement. Many bearings are offered in both fixed and float arrangements and have identical mounting dimensions. It is recommended to use both units on one shaft in high temperature applications to help account for linear shaft expansion. For more information see page G-249 in the Mounted Ball Bearing Engineering section.

Expansion Unit Availability Chart

Bore Diameter		Unit Size	Standard Duty				Expansion Capability
in	mm		ENP	ESP	ESF	ESFT	
5/8		10					
11/16		11	●		●	●	3/32”
3/4		12					
	20	204					
13/16		13					
7/8		14					
15/16		15	●	●	●	●	3/32”
	25	205					
1		16					
1 1/16		17					
1 1/8		18					
	30	206	●	●	●	●	1/8”
1 3/6		19					
1 1/4		20R					
1 1/4		20					
1 5/16		21					
1 3/8		22	●	●	●	●	1/8”
	35	207					
1 7/16		23					
1 1/2		24					
1 9/16		25	●		●	●	1/8”
	40	208					
1 5/8		26					
1 11/16		27	●		●	●	1/8”
1 3/4		28					
	45	209					
1 13/16		29					
1 7/8		30					
1 15/16		31	●	●	●	●	3/16”
	50	210					
2		32R					
2		32					
2 1/8		34	●	●	●	●	3/16”
	55	211					
2 3/16		35					
2 1/4		36					
	60	212	●	●	●		3/16”
2 3/8		38					
2 7/16		39					
2 1/2		40					
2 11/16		43		●	●		3/16”
	70	214					
2 7/8		46					
2 15/16		47			●		3/16”
	75	215					
3		48					
	80	216		●			1/4”
3 3/16		51					

Bore Diameter		Unit Size	Medium Duty								Expansion Capability
in	mm		EMFP	EMFPD	EMP	EMSPD	EMSFPD	EMSF	EMSFT	EMFC	
15/16		15									
	25	305			●			●	●		1/8”
1		16									
	30	306									
1 3/16		19			●			●	●		1/8”
1 1/4		20									
	35	307									
1 7/16		23			●			●	●		1/8”
1 1/2		24									
	40	308			●			●	●		1/8”
1 11/16		27									
1 3/4		28			●			●	●	●	3/16”
	45	309									
1 15/16		31									
	50	310			●	●		●	●	●	3/16”
2		32									
	55	311									
2 3/16		35			●			●		●	3/16”
2 1/4		36									
2 7/16		39									
2 1/2		40	●	●	●	●		●		●	3/16”
	65	313									
2 11/16		43	●	●	●			●			3/16”
	70	314									
2 15/16		47									
	75	315	●	●	●	●		●			1/4”
3		48									
	80	316									
3 3/16		51			●			●			1/4”
3 1/4		52									
3 7/16		55	●	●	●	●	●	●			9/32”
3 15/16		63									
	100	320	●	●	●	●	●	●			9/32”
4		64									
4 7/16		71	●	●			●	●			7/16”
4 15/16		79									

● Expansion option exists for the bearing and housing combination

Note: 1. Not all combinations of housing styles, locking types and seal options are available. Consult customer service for availability and possible set-up charges.

2. Alternate expansion version available in some sizes and configurations with half-dog and wire, suffix “HIY”, see page G-104 for more information.

Additional Options

Greases

Optional greases are readily available, consult Application Engineering for complete list

High Temperature Synthetic

- Used in HT, HTA, and HTC suffix modified bearings
- High quality, synthetic hydrocarbon, lithium complex thickened grease NLGI#2, and ISO 220 viscosity
- Superior high temperature (200 F to 400F) stability

KRYTOX* Extended Lube

- Used in HI suffix modified bearings
- KYRTOX GPL 226, an extremely high performance perflourinated oil and PTFE thickened grease
- KRYTOX grease has a superior service life and therefore diminishes re-lubrication frequency and extends life
- Engineers have found that, compared to other high temperature greases, the thermal stability and lubricity of the KRYTOX can improve high temperature bearing life by a factor of 4 to 45 times

Custom Capabilities

Additional Industry specific options exist such as the:

Sealmaster Paver Bearing – page G-127
Sealmaster Material Handling Bearing - page G-109
Sealmaster PN Gold – Corrosion Resistant – page K-29

Our Application Engineers will design a bearing based on your unique application parameters, utilizing a variety of existing components or special components. By combining your equipment knowledge and our Application Engineers bearing expertise, a product solution can be designed to maximize bearing performance in your specific application.

Thousands of customers benefit from this capability every year, and now you no longer have to endure the lead time associated with these custom engineered solutions. In many cases, a higher performance product can be designed and developed specifically for your application.

SEALMASTER® Performance Mounted Ball Bearings

Duty: Standard

Rolling Elements: Ball

Housing: Cast Iron Pillow Block – High Base

Self Alignment: +/- 2 Degrees

Lock: Setscrew

Seal: Felt

Optional Seal: Contact

Temperature: -20° to 220°F

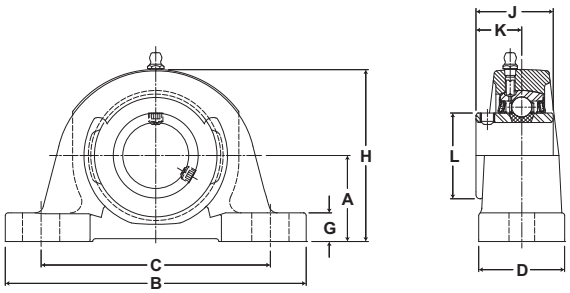

NP Series Standard Duty Pillow Blocks - Setscrew Locking

Bore Diameter inch	Bore Diameter mm	Part No.	Bearing Insert No.	Basic Dynamic Rating lb/N	Dimensions inch / mm A	B	C min.	C max.	D	G	H	J	K	L	Bolt Size	Unit Wt. lb/kg
1/2 9/16 5/8 11/16		NP-8 NP-9 NP-10 NP-11	2-08 2-09 2-010 2-011	2611 11614	1 3/16 30.2	5 127.0	3 3/8 85.7	4 1/8 104.8	1 1/2 38.1	1/2 12.7	2 7/16 61.9	1 7/32 31.0	23/32 18.3	1 3/16 30.2	3/8	1.7 .77
3/4	20	NP-12 NP-204	2-012 5204	2611 11614	1 5/16 33.3	5 127.0	3 3/8 85.7	4 1/8 104.8	1 1/2 38.1	1/2 12.7	2 9/16 65.1	1 7/32 31.0	23/32 18.3	1 3/16 30.2	3/8	1.9 .86
13/16 7/8 15/16 1	25	NP-13 NP-14 NP-15 NP-16 NP-205	2-013 2-014 2-015 2-1 5205	2801 12459	1 7/16 36.5	5 1/2 139.7	3 7/8 98.4	4 3/8 111.1	1 1/2 38.1	1/2 12.7	2 13/16 71.4	1 3/8 34.9	13/16 20.6	1 3/8 34.9	3/8	2.2 1.00
1 1/16 1 1/8 1 3/16 1 1/4	30	NP-17 NP-18 NP-19 NP-20R NP-206	2-11 2-12 2-13 1-14 5206	4381 19487	1 11/16 42.9	6 1/2 165.1	4 7/16 112.7	5 1/16 128.6	1 7/8 47.6	9/16 14.3	3 3/8 85.7	1 1/2 38.1	7/8 22.2	1 19/32 40.5	1/2	3.6 1.63
1 1/4 1 5/16 1 3/8 1 7/16	35	NP-20 NP-21 NP-22 NP-23 NP-207	2-14 2-15 2-16 2-17 5207	5782 25718	1 7/8 47.6	6 9/16 166.7	4 11/16 119.1	5 5/16 134.9	1 7/8 47.6	5/8 15.9	3 3/4 95.3	1 11/16 42.9	1 25.4	1 55/64 47.2	1/2	4.5 2.04
1 1/2 1 9/16	40	NP-24 NP-25 NP-208	2-18 2-19 5208	7340 32648	1 15/16 49.2	7 1/4 184.2	4 7/8 123.8	5 7/8 149.2	2 1/8 54.0	11/16 17.5	3 15/16 100.0	1 15/16 49.2	1 3/16 30.2	2 1/16 52.4	1/2	5.7 2.59
1 5/8 1 11/16 1 3/4	45	NP-26 NP-27 NP-28 NP-209	2-110 2-111 2-112 5209	7901 35144	2 1/8 54.0	7 1/2 190.5	5 7/16 138.1	6 1/16 154.0	2 1/8 54.0	11/16 17.5	4 1/4 108.0	1 15/16 49.2	1 3/16 30.2	2 19/64 58.3	1/2	6.5 2.95
1 13/16 1 7/8 1 15/16 2	50	NP-29 NP-30 NP-31 NP-32R NP-210	2-113 2-114 2-115 1-2 5210	7889 35090	2 1/4 57.2	8 1/8 206.4	6 152.4	6 1/2 165.1	2 3/8 60.3	3/4 19.1	4 9/16 115.9	2 1/32 51.6	1 9/32 32.5	2 15/32 62.7	5/8	7.9 3.58
2 2 1/8 2 3/16	55	NP-32 NP-34 NP-35 NP-211	2-2 2-22 2-23 5211	9752 43377	2 1/2 63.5	8 5/8 219.1	6 1/2 165.1	7 177.8	2 3/8 60.3	3/4 19.1	5 127.0	2 3/16 55.6	1 5/16 33.3	2 23/32 69.1	5/8	9.7 4.40
2 1/4 2 3/8 2 7/16	60	NP-36 NP-38 NP-39 NP-212	2-24 2-26 2-27 5212	11789 52437	2 3/4 69.9	9 1/2 241.3	6 7/8 174.6	7 5/8 193.7	2 3/4 69.9	7/8 22.2	5 9/16 141.3	2 9/16 65.1	1 9/16 39.7	2 63/64 75.8	5/8	13.7 6.21
2 7/8 2 15/16	75	NP-46 NP-47 NP-215	2-214 2-215 5215	14839 66004	3.5 88.9	13 330.2	8 1/2 215.9	9 1/2 241.3	3 1/2 88.9	1 1/8 28.6	7 177.8	3 1/16 77.8	1 3/4 44.5	3 41/64 92.5	7/8	27.9 12.66

For Standard Duty Bearing Inserts-Single Lock see page G-92.

Metric dimensions for reference only.
Not all parts are available from stock. Please contact customer service for availability (800) 626-2120.
For more information on bearing capabilities outside of our standard offering, please contact Application Engineering (800) 626-2093.

Performance Mounted Ball Bearings

SEALMASTER®

Duty: Standard
Rolling Elements: Ball
Housing: Cast Iron Pillow Block – High Base
Self Alignment: +/- 2 Degrees
Lock: SKWEZLOC Locking Collar
Seal: Felt
Optional Seal: Contact
Temperature: -20° to 220°F

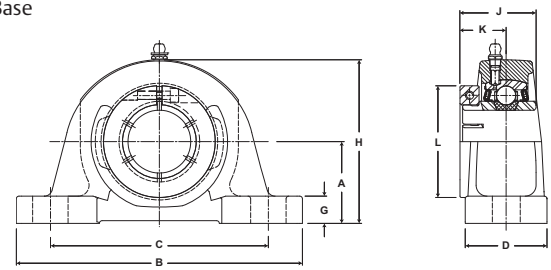

NP-T Series Standard Duty Pillow Block - SKWEZLOC Locking Collar - Inch

Bore Diameter inch	Part No.	Bearing Insert No.	Basic Dynamic Rating lb/N	Dimensions inch / mm										Bolt Size	Unit Wt. lb/kg
				A	B	C min.	C max.	D	G	H	J	K	L		
3/4	NP-12T	2-012T	2611 11614	1 5/16 33.3	5 127.0	3 3/8 85.7	4 1/8 104.8	1 1/2 38.1	1/2 12.7	2 9/16 65.1	1 9/32 32.5	25/32 19.8	1 3/4 44.5	3/8	2.0 .91
15/16 1	NP-15T NP-16T	2-015T 2-1T	2801 12459	1 7/16 36.5	5 1/2 139.7	3 7/8 98.4	4 3/8 111.1	1 1/2 38.1	1/2 12.7	2 13/16 71.4	1 7/16 36.5	7/8 22.2	1 15/16 49.2	3/8	2.4 1.09
1 1/8 1 3/16 1 1/4	NP-18T NP-19T NP-20RT	2-12T 2-13T 1-14T	4381 19487	1 11/16 42.9	6 1/2 165.1	4 7/16 112.7	5 1/16 128.6	1 7/8 47.6	9/16 14.3	3 3/8 85.7	1 9/16 39.7	15/16 23.8	2 3/16 55.6	1/2	3.8 1.72
1 1/4	NP-20T	2-14T	5782 25718	1 7/8 47.6	6 9/16 166.7	4 11/16 119.1	5 5/16 134.9	1 7/8 47.6	5/8 15.9	3 3/4 95.3	1 3/4 44.5	1 1/16 27.0	2 7/16 61.9	1/2	4.8 2.18
1 3/8 1 7/16	NP-22T NP-23T	2-16T 2-17T	4782 21270	1 7/8 47.6	6 9/16 166.7	4 11/16 119.1	5 5/16 134.9	1 7/8 47.6	5/8 15.9	3 3/4 95.3	1 3/4 44.5	1 1/16 27.0	2 9/16 65.1	1/2	4.8 2.18
1 1/2	NP-24T	2-18T	7340 32648	1 15/16 49.2	7 1/4 184.2	4 7/8 123.8	5 7/8 149.2	2 1/8 54.0	11/16 17.5	3 15/16 100.0	2 50.8	1 1/4 31.8	2 11/16 68.3	1/2	6.0 2.72
1 5/8	NP-26T	2-110T	7901 35144	2 1/8 54.0	7 1/2 190.5	5 7/16 138.1	6 1/16 154.0	2 1/8 54.0	11/16 17.5	4 1/4 108.0	2 50.8	1 1/4 31.8	2 13/16 71.4	1/2	6.8 3.08
1 11/16 1 3/4	NP-27T NP-28T	2-111T 2-112T	7901 35144	2 1/8 54.0	7 1/2 190.5	5 7/16 138.1	6 1/16 154.0	2 1/8 54.0	11/16 17.5	4 1/4 108.0	2 50.8	1 1/4 31.8	2 15/16 74.6	1/2	6.8 3.08
1 15/16 2	NP-31T NP-32RT	2-115T 1-2T	7889 35090	2 1/4 57.2	8 1/8 206.4	6 152.4	6 1/2 165.1	2 3/8 60.3	3/4 19.1	4 9/16 115.9	2 3/32 53.2	1 11/32 34.1	3 3/8 85.7	5/8	8.5 3.86
2	NP-32T	2-2T	9752 43377	2 1/2 63.5	8 5/8 219.1	6 1/2 165.1	7 177.8	2 3/8 60.3	3/4 19.1	5 127.0	2 1/4 57.2	1 3/8 34.9	3 1/2 88.9	5/8	10.3 4.67
2 1/8 2 3/16	NP-34T NP-35T	2-22T 2-23T	9752 43377	2 1/2 63.5	8 5/8 219.1	6 1/2 165.1	7 177.8	2 3/8 60.3	3/4 19.1	5 127.0	2 1/4 57.2	1 3/8 34.9	3 5/8 92.1	5/8	10.3 4.67
2 1/4	NP-36T	2-24T	11789 52437	2 3/4 69.9	9 1/2 241.3	6 7/8 174.6	7 5/8 193.7	2 3/4 69.9	7/8 22.2	5 9/16 141.3	2 5/8 66.7	1 5/8 41.3	4 1/16 103.2	5/8	14.9 6.76
2 3/8	NP-38T	2-26T	11789 52437	2 3/4 69.9	9 1/2 241.3	6 7/8 174.6	7 5/8 193.7	2 3/4 69.9	7/8 22.2	5 9/16 141.3	2 5/8 66.7	1 5/8 41.3	4 1/8 104.8	5/8	14.9 6.76

NP-T Series Standard Duty Pillow Block - SKWEZLOC Locking Collar - Metric -SKWEZ™

Bore Diameter mm	Part No.	Bearing Insert No.	Basic Dynamic Rating N/lb	Dimensions mm / inch										Bolt Size	Unit Wt. lb/kg
				A	B	C min.	C max.	D	G	H	J	K	L		
20	NP-204TMC	5204TMC	11614 4782	33.3 1 5/16	127.0 5	85.7 3 3/8	104.8 4 1/8	38.2 1 1/2	12.7 1/2	65.1 2 9/16	32.5 1 9/32	19.8 25/32	44.5 1 3/4	M10	4.8 .91
25	NP-205TMC	5205TMC	19487 2801	36.5 1 7/16	139.7 5 1/2	98.4 3 7/8	111.1 4 3/8	38.1 1 1/2	12.7 1/2	71.4 2 13/16	36.5 1 7/16	22.2 7/8	49.2 1 15/16	M10	2.4 1.1
30	NP-206TMC	5206TMC	19487 4381	42.9 1 11/16	165.1 6 1/2	112.7 4 7/16	128.6 5 1/16	47.6 1 7/8	14.3 9/16	85.7 3 3/8	39.7 1 9/16	23.8 15/16	55.6 2 3/16	M10	3.8 1.72
35	NP-207TMC	5207TMC	21270 4782	47.6 1 7/8	166.7 6 9/16	119.1 4 11/16	134.9 5 5/16	47.6 1 7/8	15.9 5/8	95.3 3 3/4	44.5 1 3/4	27.0 1 1/16	65.1 2 9/16	M10	4.8 2.18
40	NP-208TMC	5208TMC	32648 7340	49.2 1 15/16	184.2 7 1/4	123.8 4 7/8	149.2 5 7/8	54.0 2 1/8	17.5 11/16	100.0 3 15/16	54.8 2 5/32	31.8 1 1/4	68.3 2 11/16	M14	6.0 2.72
45	NP-209TMC	5209TMC	35144 7901	54.0 2 1/8	190.5 7 1/2	138.1 5 7/16	154.0 6 1/16	54.0 2 1/8	17.5 11/16	108.0 4 1/4	50.8 2	31.8 1 1/4	74.6 2 15/16	M14	6.8 3.08
50	NP-210TMC	5210TMC	35090 7889	57.2 2 1/4	206.4 8 1/8	152.4 6	165.1 6 1/2	60.3 2 3/8	19.1 3/4	115.9 4 9/16	53.2 2 3/32	34.1 1 11/32	85.7 3 3/8	M16	8.5 3.86
55	NP-211TMC	5211TMC	43377 9752	63.5 2 1/2	219.1 8 5/8	165.1 6 1/2	177.8 7	60.3 2 3/8	19.1 3/4	127.0 5	57.2 2 1/4	34.9 1 3/8	92.1 3 5/8	M16	10.3 4.67
60	NP-212TMC	5212TMC	11789 52437	69.9 2 3/4	241.3 9 1/2	174.6 6 7/8	193.7 7 5/8	69.9 2 3/4	22.2 7/8	141.3 5 9/16	66.7 2 5/8	41.3 1 5/8	104.8 4 1/8	M16	14.9 6.8

For Standard Duty Bearing Inserts - SKWEZLOC Locking Collar see page G-93. For Replacement Lock Collar see page G-98.

SEALMASTER® Performance Mounted Ball Bearings

Duty: Standard

Rolling Elements: Ball

Housing: Cast Iron Pillow Block – High Base

Self Alignment: +/- 2 Degrees

Lock: Double Setscrew

Seal: Felt

Optional Seal: Contact

Temperature: -20° to 220°F

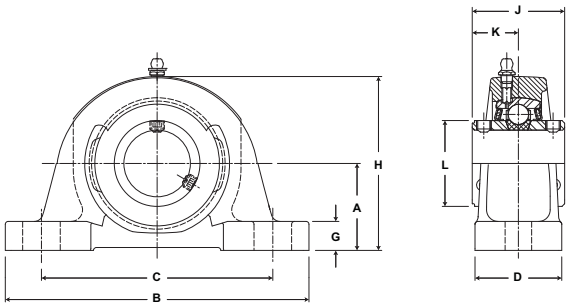

NPD Series Standard Duty Pillow Blocks With Double Lock - Setscrew Locking

Bore Diameter inch	Part No.	Bearing Insert No.	Basic Dynamic Rating lb/N	Dimensions inch / mm A	B	C min.	C max.	D	G	H	J	K	L	Bolt Size	Unit Wt. lb/kg
7/8	NPD-14	2-014D	2801	1 7/16	5 1/2	3 7/8	4 3/8	1 1/2	1/2	2 13/16	1 1/2	3/4	1 3/8	3/8	2.4
15/16	NPD-15	2-015D	12459	36.5	139.7	98.4	111.1	38.1	12.7	71.4	38.1	19.1	34.9		1.09
1	NPD-16	2-1D													
1 3/16	NPD-19	2-13D	4381 19487	1 11/16 42.9	6 1/2 165.1	4 7/16 112.7	5 1/16 128.6	1 7/8 47.6	9/16 14.3	3 3/8 85.7	1 3/4 44.5	7/8 22.2	1 19/32 40.5	1/2	3.8 1.72
1 1/4	NPD-20	2-14D	5782	1 7/8	6 9/16	4 11/16	5 5/16	1 7/8	5/8	3 3/4	2	1	1 55/64	1/2	4.7
1 3/8	NPD-22	2-16D	25718	47.6	166.7	119.1	134.9	47.6	15.9	95.3	50.8	25.4	47.2		2.13
1 7/16	NPD-23	2-17D													
1 1/2	NPD-24	2-18D	7340	1 15/16	7 1/4	4 7/8	5 7/8	2 1/8	11/16	3 15/16	2 5/16	1 5/32	2 1/16	1/2	6.0
1 9/16	NPD-25	2-19D	32648	49.2	184.2	123.8	149.2	54.0	17.5	100.0	58.7	29.4	52.4		2.73
1 11/16	NPD-27	2-111D	7901	2 1/8	7 1/2	5 7/16	6 1/16	2 1/8	11/16	4 1/4	2 3/8	1 3/16	2 19/64	1/2	6.5
1 3/4	NPD-28	2-112D	35144	54.0	190.5	138.1	154.0	54.0	17.5	108.0	60.3	30.2	58.3		2.95
1 7/8	NPD-30	2-114D	7889	2 1/4	8 1/8	6	6 1/2	2 3/8	3/4	4 9/16	2 1/2	1 1/4	2 15/32	5/8	8.3
1 15/16	NPD-31	2-115D	35090	57.2	206.4	152.4	165.1	60.3	19.1	115.9	63.5	31.8	62.7		3.76
2	NPD-32	2-2D	9752	2 1/2	8 5/8	6 1/2	7	2 3/8	3/4	5	2 5/8	1 5/16	2 23/32	5/8	10.0
2 1/8	NPD-34	2-22D	43377	63.5	219.1	165.1	177.8	60.3	19.1	127.0	66.7	33.3	69.1		4.54
2 3/16	NPD-35	2-23D													
2 1/4	NPD-36	2-24D	11789	2 3/4	9 1/2	6 7/8	7 5/8	2 3/4	7/8	5 9/16	3 1/8	1 9/16	2 63/64	5/8	14.0
2 3/8	NPD-38	2-26D	52437	69.9	241.3	174.6	193.7	69.9	22.2	141.3	79.4	39.7	75.8		6.35
2 7/16	NPD-39	2-27D													

For Standard Duty Bearing Inserts-Double Lock see page G-94.

Metric dimensions for reference only.
Not all parts are available from stock. Please contact customer service for availability (800) 626-2120.
For more information on bearing capabilities outside of our standard offering, please contact Application Engineering (800) 626-2093.

Performance Mounted Ball Bearings

SEALMASTER®

Duty: Standard

Rolling Elements: Ball

Housing: Cast Iron Pillow Block – Low Base

Self Alignment +/- 2 Degrees

Lock Setscrew

Seal: Felt

Optional Seal: Contact

Temperature: -20° to 220°F

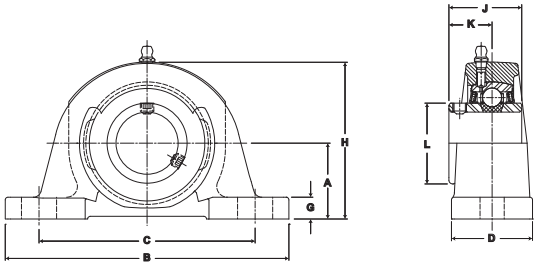

NPL Series Standard Duty Pillow Blocks - Setscrew Locking

Bore Diameter inch	Bore Diameter mm	Part No.	Bearing Insert No.	Basic Dynamic Rating lb/N	Dimensions inch / mm A	B	C min.	C max.	D	G	H	J	K	L	Bolt Size	Unit Wt. lb/kg
1/2		NPL-8	2-08													
9/16		NPL-9	2-09	2611	1 1/16	5	3 3/8	4 1/8	1 1/2	3/8	2 5/16	1 7/32	23/32	1 3/16	3/8	1.7
5/8		NPL-10	2-010	11614	27.0	127.0	85.7	104.8	38.1	9.5	58.7	31.0	18.3	30.2		.77
11/16		NPL-11	2-011													
3/4		NPL-12	2-012	2611	1 1/4	5	3 3/8	4 1/8	1 1/2	7/16	2 1/2	1 7/32	23/32	1 3/16	3/8	1.7
	20	NPL-204	5204	11614	31.8	127.0	85.7	104.8	38.1	11.1	63.5	31.0	18.3	30.2		.77
13/16		NPL-13	2-013													
7/8		NPL-14	2-014													
15/16		NPL-15	2-015	2801	1 5/16	5 1/2	3 7/8	4 3/8	1 1/2	1/2	2 11/16	1 3/8	13/16	1 3/8	3/8	2.0
1		NPL-16	2-1	12459	33.3	139.7	98.4	111.1	38.1	12.7	68.3	34.9	20.6	34.9		.91
	25	NPL-205	5205													
1 1/16		NPL-17	2-11													
1 1/8		NPL-18	2-12													
1 3/16		NPL-19	2-13	4381	1 9/16	6 1/2	4 7/16	5 1/16	1 7/8	7/16	3 1/4	1 1/2	7/8	1 19/32	1/2	3.6
1 1/4		NPL-20R	1-14	19487	39.7	165.1	112.7	128.6	47.6	11.1	82.6	38.1	22.2	40.5		1.63
	30	NPL-206	5206													
1 1/4		NPL-20	2-14													
1 5/16		NPL-21	2-15													
1 3/8		NPL-22	2-16	5782	1 13/16	6 9/16	4 11/16	5 5/16	1 7/8	9/16	3 11/16	1 11/16	1	1 55/64	1/2	4.4
1 7/16		NPL-23	2-17	25718	46.0	166.7	119.1	134.9	47.6	14.3	93.7	42.9	25.4	47.2		2.00
	35	NPL-207	5207													
1 1/2		NPL-24	2-18	7340	1 15/16	7 1/4	4 7/8	5 7/8	2 1/8	11/16	3 15/16	1 15/16	1 3/16	2 1/16	1/2	5.7
1 9/16		NPL-25	2-19	32648	49.2	184.2	123.8	149.2	54.0	17.5	100.0	49.2	30.2	52.4		2.59
	40	NPL-208	5208													
1 5/8		NPL-26	2-110													
1 11/16		NPL-27	2-111	7901	2 1/16	7 1/2	5 7/16	6 1/16	2 1/8	5/8	4 3/16	1 15/16	1 3/16	2 19/64	1/2	6.2
1 3/4		NPL-28	2-112	35144	52.4	190.5	138.1	154.0	54.0	15.9	106.4	49.2	30.2	58.3		2.81
	45	NPL-209	5209													
1 13/16		NPL-29	2-113													
1 7/8		NPL-30	2-114													
1 15/16		NPL-31	2-115	7889	2 3/16	8 1/8	6	6 1/2	2 3/8	11/16	4 1/2	2 1/32	1 9/32	2 15/32	5/8	7.8
2		NPL-32R	1-2	35090	55.6	206.4	152.4	165.1	60.3	17.5	114.3	51.6	32.5	62.7		3.54
	50	NPL-210	5210													
2		NPL-32	2-2													
2 1/8		NPL-34	2-22	9752	2 7/16	8 5/8	6 1/2	7	2 3/8	11/16	4 15/16	2 3/16	1 5/16	2 23/32	5/8	9.6
2 3/16		NPL-35	2-23	43377	61.9	219.1	165.1	177.8	60.3	17.5	125.4	55.6	33.3	69.1		4.35
	55	NPL-211	5211													
2 1/4		NPL-36	2-24													
2 3/8		NPL-38	2-26	11789	2 11/16	9 1/2	6 7/8	7 5/8	2 3/4	13/16	5 1/2	2 9/16	1 9/16	2 63/64	5/8	13.5
2 7/16		NPL-39	2-27	52437	68.3	241.3	174.6	193.7	69.9	20.6	139.7	65.1	39.7	75.8		6.12
	60	NPL-212	5212													
2 11/16		NPL-43	2-211	13971 62143	3 76.2	11 1/4 285.8	7 1/8 181.0	8 7/8 225.4	3 1/4 82.6	1 1/16 27.0	6 1/4 158.8	2 3/4 69.9	1 11/16 42.9	3 7/16 87.3	3/4	21.5 9.75

For Standard Duty Bearing Inserts-Single Lock see page G-92.

SEALMASTER® Performance Mounted Ball Bearings

Duty: Standard
Rolling Elements: Ball
Housing: Cast Iron Pillow Block – Low Base
Self Alignment: +/- 2 Degrees
Lock: SKWEZLOC Locking Collar
Seal: Felt
Optional Seal: Contact
Temperature: -20° to 220°F

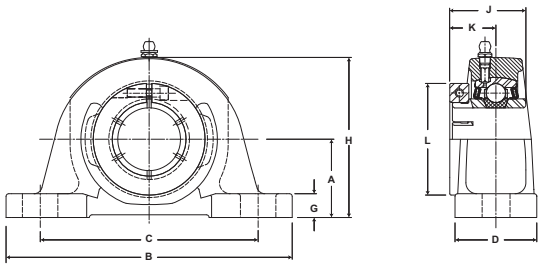

NPL-T Series Standard Duty Pillow Block - SKWEZLOC Locking Collar

Bore Diameter inch	Part No.	Bearing Insert No.	Basic Dynamic Rating lb/N	Dimensions inch / mm A	B	C min.	C max.	D	G	H	J	K	L	Bolt Size	Unit Wt. lb/kg
3/4	NPL-12T	2-012T	2611 11614	1 1/4 31.8	5 127.0	3 3/8 85.7	4 1/8 104.8	1 1/2 38.1	7/16 11.1	2 1/2 63.5	1 9/32 32.5	25/32 19.8	1 3/4 44.5	3/8	1.8 .82
15/16 1	NPL-15T NPL-16T	2-015T 2-1T	2801 12459	1 5/16 33.3	5 1/2 139.7	3 7/8 98.4	4 3/8 111.1	1 1/2 38.1	1/2 12.7	2 11/16 68.3	1 7/16 36.5	7/8 22.2	1 15/16 49.2	3/8	2.2 1.00
1 1/8 1 3/16 1 1/4	NPL-18T NPL-19T NPL-20RT	2-12T 2-13T 1-14T	4381 19487	1 9/16 39.7	6 1/2 165.1	4 7/16 112.7	5 1/16 128.6	1 7/8 47.6	7/16 11.1	3 1/4 82.6	1 9/16 39.7	15/16 23.8	2 3/16 55.6	1/2	3.8 1.72
1 1/4	NPL-20T	2-14T	5782 25718	1 13/16 46.0	6 9/16 166.7	4 11/16 119.1	5 5/16 134.9	1 7/8 47.6	9/16 14.3	3 11/16 93.7	1 3/4 44.5	1 1/16 27.0	2 7/16 61.9	1/2	4.7 2.13
1 3/8 1 7/16	NPL-22T NPL-23T	2-16T 2-17T	5782 25718	1 13/16 46.0	6 9/16 166.7	4 11/16 119.1	5 5/16 134.9	1 7/8 47.6	9/16 14.3	3 11/16 93.7	1 3/4 44.5	1 1/16 27.0	2 9/16 65.1	1/2	4.7 2.13
1 1/2	NPL-24T	2-18T	7340 32648	1 15/16 49.2	7 1/4 184.2	4 7/8 123.8	5 7/8 149.2	2 1/8 54.0	11/16 17.5	3 15/16 100.0	2 50.8	1 1/4 31.8	2 11/16 68.3	1/2	6.0 2.72
1 5/8	NPL-26T	2-110T	7901 35144	2 1/16 52.4	7 1/2 190.5	5 7/16 138.1	6 1/16 154.0	2 1/8 54.0	5/8 15.9	4 3/16 106.4	2 50.8	1 1/4 31.8	2 13/16 71.4	1/2	6.5 2.95
1 11/16 1 3/4	NPL-27T NPL-28T	2-111T 2-112T	7901 35144	2 1/16 52.4	7 1/2 190.5	5 7/16 138.1	6 1/16 154.0	2 1/8 54.0	5/8 15.9	4 3/16 106.4	2 50.8	1 1/4 31.8	2 15/16 74.6	1/2	6.5 2.95
1 15/16 2	NPL-31T NPL-32RT	2-115T 1-2T	7889 35090	2 3/16 55.6	8 1/8 206.4	6 152.4	6 1/2 165.1	2 3/8 60.3	11/16 17.5	4 1/2 114.3	2 3/32 53.2	1 11/32 34.1	3 3/8 85.7	5/8	8.4 3.81
2	NPL-32T	2-2T	9752 43377	2 7/16 61.9	8 5/8 219.1	6 1/2 165.1	7 177.8	2 3/8 60.3	11/16 17.5	4 15/16 125.4	2 1/4 57.2	1 3/8 34.9	3 1/2 88.9	5/8	10.2 4.63
2 1/8 2 3/16	NPL-34T NPL-35T	2-22T 2-23T	9752 43377	2 7/16 61.9	8 5/8 219.1	6 1/2 165.1	7 177.8	2 3/8 60.3	11/16 17.5	4 15/16 125.4	2 1/4 57.2	1 3/8 34.9	3 5/8 92.1	5/8	10.2 4.63
2 1/4	NPL-36T	2-24T	11789 52437	2 11/16 68.3	9 1/2 241.3	6 7/8 174.6	7 5/8 193.7	2 3/4 69.9	13/16 20.6	5 1/2 139.7	2 5/8 66.7	1 5/8 41.3	4 1/16 103.2	5/8	14.7 6.67
2 3/8 2 7/16	NPL-38T NPL-39T	2-26T 2-27T	11789 52437	2 11/16 68.3	9 1/2 241.3	6 7/8 174.6	7 5/8 193.7	2 3/4 69.9	13/16 20.6	5 1/2 139.7	2 5/8 66.7	1 5/8 41.3	4 1/8 104.8	5/8	14.7 6.67

For Standard Duty SKWEZLOC Locking Collar Bearing inserts see page G-93. For Replacement Lock Collar see page G-98.

Metric dimensions for reference only.
Not all parts are available from stock. Please contact customer service for availability (800) 626-2120.
For more information on bearing capabilities outside of our standard offering, please contact Application Engineering (800) 626-2093.

Performance Mounted Ball Bearings

SEALMASTER®

Duty: Standard

Rolling Elements: Ball

Housing: Cast Iron Pillow Block – Heavy Duty

Self Alignment: +/- 2 Degrees

Lock: Setscrew

Seal: Felt

Optional Seal: Contact

Temperature: -20° to 220°F

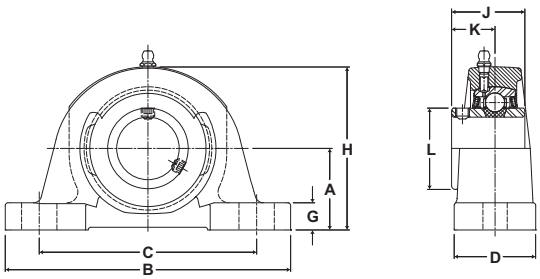

SP Series Standard Duty Pillow Blocks - Setscrew Locking

Bore Diameter inch	Bore Diameter mm	Part No.	Bearing Insert No.	Basic Dynamic Rating lb/N	Dimensions inch / mm A	B	C min.	C max.	D	G	H	J	K	L	Bolt Size	Unit Wt. lb/kg
13/16 7/8 15/16 1	25	SP-13 SP-14 SP-15 SP-16 SP-205	2-013 2-014 2-015 2-1 5205	2801 12459	1 3/4 44.5	7 177.8	5 1/8 130.2	5 5/8 142.9	2 50.8	9/16 14.3	3 5/16 84.1	1 3/8 34.9	13/16 20.6	1 3/8 34.9	1/2	3.6 1.63
1 1/16 1 1/8 1 3/16 1 1/4	30	SP-17 SP-18 SP-19 SP-20R SP-206	2-11 2-12 2-13 2-14 5206	4381 19487	2 50.8	7 1/2 190.5	5 3/8 136.5	6 1/8 155.6	2 50.8	5/8 15.9	3 7/8 98.4	1 1/2 38.1	7/8 22.2	1 19/32 40.5	1/2	5.0 2.27
1 1/4 1 5/16 1 3/8 1 7/16	35	SP-20 SP-21 SP-22 SP-23 SP-207	2-14 2-15 2-16 2-17 5207	5782	2 3/8 60.3	8 1/4 209.6	5 5/8 142.9	6 7/8 174.6	2 1/4 57.2	3/4 19.1	4 1/2 114.3	1 11/16 42.9	1 25.4	1 55/64 47.2	5/8	7.0 3.18
1 1/2 1 9/16	40	SP-24 SP-25 SP-208	2-18 2-19 5208	7340 32648	2 5/16 58.7	8 1/2 215.9	5 7/8 149.2	7 1/8 181.0	2 3/8 60.3	3/4 19.1	4 9/16 115.9	1 15/16 49.2	1 3/16 30.2	2 1/16 52.4	5/8	7.6 3.45
1 5/8 1 11/16 1 3/4	45	SP-26 SP-27 SP-28 SP-209	2-110 2-111 2-112 5209	7901 35144	2 3/8 60.3	8 3/4 222.3	5 7/8 149.2	7 1/8 181.0	2 3/8 60.3	3/4 19.1	4 5/8 117.5	1 15/16 49.2	1 3/16 30.2	2 19/64 58.3	5/8	8.1 3.67
1 13/16 1 7/8 1 15/16 2	50	SP-29 SP-30 SP-31 SP-32R SP-210	2-113 2-114 2-115 1-2 5210	7889 35090	2 3/4 69.9	10 1/2 266.7	6 3/4 171.5	8 1/2 215.9	2 1/2 63.5	7/8 22.2	5 5/16 134.9	2 1/32 51.6	1 9/32 32.5	2 15/32 62.7	5/8	11.6 5.26
2 2 1/8 2 3/16	55	SP-32 SP-34 SP-35 SP-211	2-2 2-22 2-23 5211	9752 43377	3 1/8 79.4	11 1/4 285.8	7 5/8 193.7	9 3/8 238.1	2 3/4 69.9	7/8 22.2	5 15/16 150.8	2 3/16 55.6	1 5/16 33.3	2 23/32 69.1	5/8	14.1 6.40
2 1/4 2 3/8 2 7/16	60	SP-36 SP-38 SP-39 SP-212	2-24 2-26 2-27 5212	11789 52437	3 1/8 79.4	11 1/2 292.1	7 7/8 200.0	9 3/8 238.1	3 76.2	7/8 22.2	6 1/16 154.0	2 9/16 65.1	1 9/16 39.7	2 63/64 75.8	3/4	16.5 7.48
2 1/2 2 11/16	70	SP-40 SP-43 SP-214	3-28 2-211 5214	13971 62143	3 3/4 95.3	12 5/8 320.7	9 3/8 238.1	10 5/8 269.9	3 3/8 85.7	1 25.4	7 1/8 181.0	2 3/4 69.9	1 11/16 42.9	3 7/16 87.3	3/4	26.3 11.93
2 7/8 2 15/16	75	SP-46 SP-47 SP-215	2-214 2-215 5215	14839 66004	3 3/4 95.3	13 330.2	9 1/4 235.0	10 3/4 273.1	3 3/8 85.7	1 25.4	7 3/16 182.6	3 1/16 77.8	1 3/4 44.5	3 41/64 92.5	3/4	26.6 12.07
3 3 3/16	80	SP-48 SP-51 SP-216	3-3 2-33 5216	17412 77449	4 101.6	14 1/2 368.3	10 5/8 269.9	12 1/8 308.0	3 3/4 95.3	1 1/8 28.6	7 13/16 198.4	3 1/4 82.6	1 15/16 49.2	3 59/64 99.6	3/4	34.0 15.42
3 1/4 3 3/8 3 7/16		SP-52 SP-54 SP-55	2-34 2-36 2-37	18681 83093	4 101.6	15 381.0	9 5/8 244.5	11 7/8 301.6	4 1/4 108.0	1 1/4 31.8	8 1/16 204.8	3 3/8 85.7	2 1/32 51.6	4 5/32 105.6	7/8	42.1 19.10

For Standard Duty Bearing Inserts-Single Lock see page G-93.

SEALMASTER® Performance Mounted Ball Bearings

Duty: Standard
Rolling Elements: Ball
Housing: Cast Iron Pillow Block – Heavy Duty
Self Alignment: +/- 2 Degrees
Lock: SKWEZLOC Locking Collar
Seal: Felt
Optional Seal: Contact
Temperature: -20° to 220°F

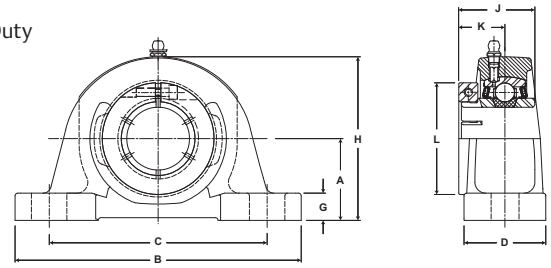

SP-T Series Standard Duty Pillow Blocks - SKWEZLOC Locking Collar

Bore Diameter inch	Part No.	Bearing Insert No.	Basic Dynamic Rating lb/N	Dimensions inch / mm A	B	C min.	C max.	D	G	H	J	K	L	Bolt Size	Unit Wt. lb/kg
15/16	SP-15T	2-015T	2801	1 3/4	7	5 1/8	5 5/8	2	9/16	3 5/16	1 7/16	7/8	1 15/16	1/2	3.8
1	SP-16T	2-1T	12459	44.5	177.8	130.2	142.9	50.8	14.3	84.1	36.5	22.2	49.2		1.72
1 1/8	SP-18T	2-12T	4381	2	7 1/2	5 3/8	6 1/8	2	5/8	3 7/8	1 9/16	15/16	2 3/16	1/2	5.2
1 3/16	SP-19T	2-13T	19487	50.8	190.5	136.5	155.6	50.8	15.9	98.4	39.7	23.8	55.6		2.36
1 1/4	SP-20RT	1-14T													
1 1/4	SP-20T	2-14T	5782	2 3/8	8 1/4	5 5/8	6 7/8	2 1/4	3/4	4 1/2	1 3/4	1 1/16	2 7/16	5/8	7.3
			25718	60.3	209.6	142.9	174.6	57.2	19.1	114.3	44.5	27.0	61.9		3.31
1 3/8	SP-22T	2-16T	5782	2 3/8	8 1/4	5 5/8	6 7/8	2 1/4	3/4	4 1/2	1 3/4	1 1/16	2 9/16	5/8	7.3
1 7/16	SP-23T	2-17T	25718	60.3	209.6	142.9	174.6	57.2	19.1	114.3	44.5	27.0	65.1		3.31
1 1/2	SP-24T	2-18T	7340	2 5/16	8 1/2	5 7/8	7 1/8	2 3/8	3/4	4 9/16	2	1 1/4	2 11/16	5/8	7.3
			32648	58.7	215.9	149.2	181.0	60.3	19.1	115.9	50.8	31.8	68.3		3.31
1 5/8	SP-26T	2-110T	7901	2 3/8	8 3/4	5 7/8	7 1/8	2 3/8	3/4	4 5/8	2	1 1/4	2 13/16	5/8	8.4
			35144	60.3	222.3	149.2	181.0	60.3	19.1	117.5	50.8	31.8	71.4		3.81
1 11/16	SP-27T	2-111T	7901	2 3/8	8 3/4	5 7/8	7 1/8	2 3/8	3/4	4 5/8	2	1 1/4	2 15/16	5/8	8.4
1 3/4	SP-28T	2-112T	35144	60.3	222.3	149.2	181.0	60.3	19.1	117.5	50.8	31.8	74.6		3.81
1 15/16	SP-31T	2-115T	7889	2 3/4	10 1/2	6 3/4	8 1/2	2 1/2	7/8	5 5/16	2 3/32	1 11/32	3 3/8	5/8	12.2
2	SP-32RT	1-2T	35090	69.9	266.7	171.5	215.9	63.5	22.2	134.9	53.2	34.1	85.7		5.53
2	SP-32T	2-2T	9752	3 1/8	11 1/4	7 5/8	9 3/8	2 3/4	7/8	5 15/16	2 1/4	1 3/8	3 1/2	5/8	14.7
			43377	79.4	285.8	193.7	238.1	69.9	22.2	150.8	57.2	34.9	88.9		6.67
2 1/8	SP-34T	2-22T	9752	3 1/8	11 1/4	7 5/8	9 3/8	2 3/4	7/8	5 15/16	2 1/4	1 3/8	3 5/8	5/8	14.7
2 3/16	SP-35T	2-23T	43377	79.4	285.8	193.7	238.1	69.9	22.2	150.8	57.2	34.9	92.1		6.67
2 1/4	SP-36T	2-24T	11789	3 1/8	11 1/2	7 7/8	9 3/8	3	7/8	6 1/16	2 5/8	1 5/8	4 1/16	3/4	17.7
			52437	79.4	292.1	200.0	238.1	76.2	22.2	154.0	66.7	41.3	103.2		8.03
2 3/8	SP-38T	2-26T	11789	3 1/8	11 1/2	7 7/8	9 3/8	3	7/8	6 1/16	2 5/8	1 5/8	4 1/8	3/4	17.7
2 7/16	SP-39T	2-27T	52437	79.4	292.1	200.0	238.1	76.2	22.2	154.0	66.7	41.3	104.8		8.03

For Standard Duty SKWEZLOC Locking Collar Bearing Inserts see page G-93. For Replacement Lock Collar see page G-98.

Metric dimensions for reference only.
Not all parts are available from stock. Please contact customer service for availability (800) 626-2120.
For more information on bearing capabilities outside of our standard offering, please contact Application Engineering (800) 626-2093.

Performance Mounted Ball Bearings

SEALMASTER®

Duty: Standard

Rolling Elements: Ball

Housing: Cast Iron Pillow Block – Heavy Duty

Self Alignment: +/- 2 Degrees

Lock: Double Setscrew

Seal: Felt

Optional Seal: Contact

Temperature: -20° to 220°F

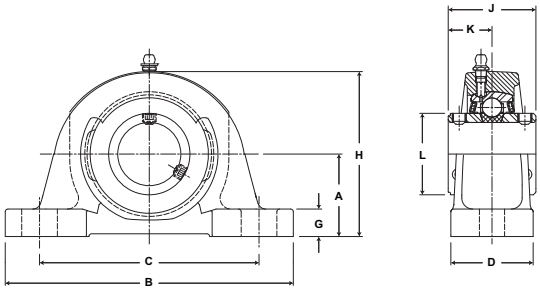

SPD Series Standard Duty Pillow Blocks With Double Lock - Setscrew Locking

Bore Diameter inch	Part No.	Bearing Insert No.	Basic Dynamic Rating lb/N	Dimensions inch / mm A	B	C min.	C max.	D	G	H	J	K	L	Bolt Size	Unit Wt. lb/kg
7/8	SPD-14	2-014D	2801	1 3/4	7	5 1/8	5 5/8	2	9/16	3 5/16	1 1/2	3/4	1 3/8	1/2	3.6
15/16	SPD-15	2-015D	12459	44.5	177.8	130.2	142.9	50.8	14.3	84.1	38.1	19.1	34.9		1.63
1	SPD-16	2-1D													
1 3/16	SPD-19	2-13D	4381 19487	2 50.8	7 1/2 190.5	5 3/8 136.5	6 1/8 155.6	2 50.8	5/8 15.9	3 7/8 98.4	1 3/4 44.5	7/8 22.2	1 19/32 40.5	1/2	5 2.27
1 1/4	SPD-20	2-14D	5782	2 3/8	8 1/4	5 5/8	6 7/8	2 1/4	3/4	4 1/2	2	1	1 55/64	5/8	7.2
1 3/8	SPD-22	2-16D	25718	60.3	209.6	142.9	174.6	57.2	19.1	114.3	50.8	25.4	47.2		3.27
1 7/16	SPD-23	2-17D													
1 1/2	SPD-24	2-18D	7340	2 5/16	8 1/2	5 7/8	7 1/8	2 3/8	3/4	4 9/16	2 5/16	1 5/32	2 1/16	5/8	7.7
1 9/16	SPD-25	2-19D	32648	58.7	215.9	149.2	181.0	60.3	19.1	115.9	58.7	29.4	52.4		3.49
1 11/16	SPD-27	2-111D	7901	2 3/8	8 3/4	5 7/8	7 1/8	2 3/8	3/4	4 5/8	2 3/8	1 3/16	2 19/64	5/8	8.3
1 3/4	SPD-28	2-112D	35144	60.3	222.3	149.2	181.0	60.3	19.1	117.5	60.3	30.2	58.3		3.76
1 7/8	SPD-30	2-114D	7889	2 3/4	10 1/2	6 3/4	8 1/2	2 1/2	7/8	5 5/16	2 1/2	1 1/4	2 15/32	5/8	11.6
1 15/16	SPD-31	2-115D	35090	69.9	266.7	171.5	215.9	63.5	22.2	134.9	63.5	31.8	62.7		5.26
2	SPD-32	2-2D	9752	3 1/8	11 1/4	7 5/8	9 3/8	2 3/4	7/8	5 15/16	2 5/8	1 5/16	2 23/32	5/8	14.1
2 1/8	SPD-34	2-22D	43377	79.4	285.8	193.7	238.1	69.9	22.2	150.8	66.7	33.3	69.1		6.40
2 3/16	SPD-35	2-23D													
2 1/4	SPD-36	2-24D	11789	3 1/8	11 1/2	7 7/8	9 3/8	3	7/8	6 1/16	3 1/8	1 9/16	2 63/64	3/4	17
2 3/8	SPD-38	2-26D	52437	79.4	292.1	200.0	238.1	76.2	22.2	154.0	79.4	39.7	75.8		7.71
2 7/16	SPD-39	2-27D													
2 1/2	SPD-40	3-28D	13971	3 3/4	12 5/8	9 3/8	10 5/8	3 3/8	1	7 1/8	3 1/2	1 3/4	3 7/16	3/4	26.8
2 11/16	SPD-43	2-211D	62143	95.3	320.7	238.1	269.9	85.7	25.4	181.0	88.9	44.5	87.3		12.16
2 7/8	SPD-46	2-214D	14839	3 3/4	13	9 1/4	10 3/4	3 3/8	1	7 3/16	3 1/2	1 3/4	3 41/64	3/4	26.8
2 15/16	SPD-47	2-215D	66004	95.3	330.2	235.0	273.1	85.7	25.4	182.6	88.9	44.5	92.5		12.16
3	SPD-48	3-3D	17412	4	14 1/2	10 5/8	12 1/8	3 3/4	1 1/8	7 13/16	3 7/8	1 15/16	3 59/64	3/4	34.5
3 3/16	SPD-51	2-33D	77449	101.6	368.3	269.9	308.0	95.3	28.6	198.4	98.4	49.2	99.6		15.65

For Standard Duty Bearing Inserts-Double Lock see page G-94.

SEALMASTER® Performance Mounted Ball Bearings

Duty: Medium

Rolling Elements: Ball

Housing: Cast Iron Pillow Block - High Base

Self Alignment: +/- 2 Degrees

Lock: Setscrew

Seal: Felt

Optional Seal: Contact

Temperature: -20° to 220°F

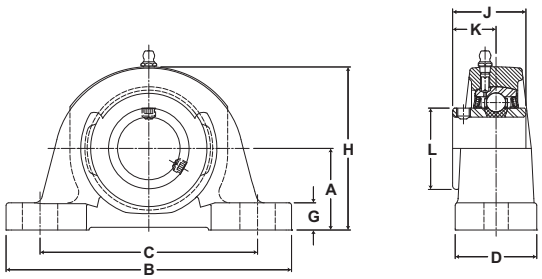

MP Series Medium Duty Pillow Blocks - Setscrew Locking

Bore Diameter inch	Bore Diameter mm	Part No.	Bearing Insert No.	Basic Dynamic Rating lb/N	Dimensions inch / mm A	B	C min.	C max.	D	G	H	J	K	L	Bolt Size	Unit Wt. lb/kg
15/16 1	25	MP-15 MP-16 MP-305	3-015 3-1 5305	4381 19487	1 3/4 44.5	6 1/4 158.8	4 3/16 106.4	5 3/16 131.8	2 50.8	5/8 15.9	3 7/16 87.3	1 1/2 38.1	7/8 22.2	1 19/32 40.5	1/2	4.0 1.81
1 3/16 1 1/4	30	MP-19 MP-20 MP-306	3-13 2-14 5306	5782 25718	1 7/8 47.6	6 7/8 174.6	4 1/2 114.3	5 1/2 139.7	2 1/4 57.2	11/16 17.5	3 13/16 96.8	1 11/16 42.9	1 25.4	1 55/64 47.2	1/2	5.4 2.45
1 7/16 1.378	35	MP-23 MP-307	3-17 5307	7340 32648	2 1/8 54.0	8 203.2	5 127.0	6 3/8 161.9	2 1/4 57.2	3/4 19.1	4 3/16 106.4	1 15/16 49.2	1 3/16 30.2	2 1/16 52.4	1/2	6.8 3.08
1 1/2	40	MP-24 MP-308	3-18 5308	7901 35144	2 5/16 58.7	8 3/4 222.3	5 1/2 139.7	6 3/4 171.5	2 5/8 66.7	13/16 20.6	4 9/16 115.9	1 15/16 49.2	1 3/16 30.2	2 19/64 58.3	5/8	9.0 4.08
1 11/16 1 3/4	45	MP-27 MP-28 MP-309	3-111 3-112 5309	7889 35090	2 5/16 58.7	8 3/4 222.3	5 7/16 138.1	6 13/16 173.0	2 5/8 66.7	13/16 20.6	4 5/8 117.5	2 1/32 51.6	1 9/32 32.5	2 15/32 62.7	5/8	9.5 4.31
1 15/16 2	50	MP-31 MP-32 MP-310	3-115 2-2 5310	9752 43377	2 1/2 63.5	9 1/2 241.3	5 15/16 150.8	7 9/16 192.1	2 7/8 73.0	7/8 22.2	5 3/32 129.4	2 3/16 55.6	1 5/16 33.3	2 23/32 69.1	5/8	11.7 5.31
2 3/16 2 1/4	55	MP-35 MP-36 MP-311	3-23 2-24 5311	11789 52437	2 3/4 69.9	10 1/4 260.4	6 9/16 166.7	7 15/16 201.6	3 1/8 79.4	1 1/16 27.0	5 5/8 142.9	2 9/16 65.1	1 9/16 39.7	2 63/64 75.8	3/4	16.2 7.35
2 7/16 2 1/2	65	MP-39 MP-40 MP-313	3-27 3-28 5313	13971 62143	3 76.2	11 1/4 285.8	7 1/8 181.0	8 7/8 225.4	3 1/4 82.6	1 1/16 27.0	6 1/4 158.8	2 3/4 69.9	1 11/16 42.9	3 7/16 87.3	3/4	21.5 9.75
2 11/16 2.756	70	MP-43 MP-314	3-211 5314	14839 66004	3 1/2 88.9	13 330.2	7 7/8 200.0	10 1/8 257.2	3 1/2 88.9	1 1/8 28.6	7 177.8	3 1/16 77.8	1 3/4 44.5	3 41/64 92.5	7/8	29.2 13.24
2 15/16 3	75	MP-47 MP-48 MP-315	3-215 3-3 5315	17412 77449	3 1/2 88.9	13 330.2	7 7/8 200.0	10 1/8 257.2	3 1/2 88.9	1 1/4 31.8	7 1/4 184.2	3 1/4 82.6	1 15/16 49.2	3 59/64 99.6	7/8	31.5 14.29
3 3/16 3 1/4	80	MP-51 MP-52 MP-316	3-33 2-34 5316	18681 83093	4 101.6	15 381.0	9 11/16 246.1	12 9/16 319.1	4 101.6	1 1/4 31.8	8 203.2	3 3/8 85.7	2 1/32 51.6	4 5/32 105.6	7/8	44.1 20.00
3 7/16 3 1/2		MP-55 MP-56	3-37 2-38	21566 95926	4 101.6	15 381.0	9 5/8 244.5	12 5/8 320.7	4 3/8 111.1	1 5/16 33.3	8 1/4 209.6	3 25/32 96.0	2 7/32 56.4	4 25/64 111.5	7/8	47.8 21.68
3 15/16 4	100	MP-63 MP-64 MP-320	3-315 3-4 5320	29905 133017	5 127.0	17 431.8	11 3/4 298.5	14 3/4 374.7	4 3/4 120.7	1 5/16 33.3	10 254.0	4 5/8 117.5	2 11/16 68.3	5 11/64 131.4	1	73.2 33.20

For Medium Duty Bearing Inserts-Single Lock see page G-95.

Metric dimensions for reference only.
Not all parts are available from stock. Please contact customer service for availability (800) 626-2120.
For more information on bearing capabilities outside of our standard offering, please contact Application Engineering (800) 626-2093.

Performance Mounted Ball Bearings

SEALMASTER®

Duty: Medium

Rolling Elements: Ball

Housing: Cast Iron Pillow Block - High Base

Self Alignment: +/- 2 Degrees

Lock: SKWEZLOC Locking Collar

Seal: Felt

Optional Seal: Contact

Temperature: -20° to 220°F

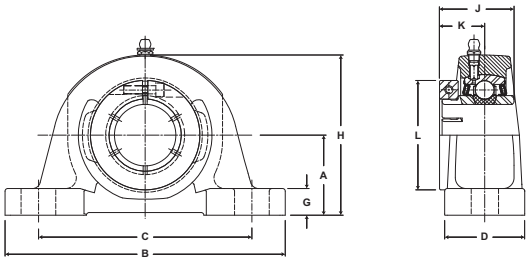

MP-T Series Medium Duty Pillow Blocks - SKWEZLOC Locking Collar

Bore Diameter inch	Part No.	Bearing Insert No.	Basic Dynamic Rating lb/N	Dimensions inch / mm										Bolt Size	Unit Wt. lb/kg
				A	B	C min.	C max.	D	G	H	J	K	L		
1	MP-16T	3-1T	4381 19487	1 3/4 44.5	6 1/4 158.8	4 3/16 106.4	5 3/16 131.8	2 50.8	5/8 15.9	3 7/16 87.3	1 9/16 39.7	15/16 23.8	2 1/16 52.4	1/2	4.2 1.91
1 3/16 1 1/4	MP-19T MP-20T	3-13T 2-14T	5782 25718	1 7/8 47.6	6 7/8 174.6	4 1/2 114.3	5 1/2 139.7	2 1/4 57.2	11/16 17.5	3 13/16 96.8	1 3/4 44.5	1 1/16 27.0	2 7/16 61.9	1/2	5.7 2.59
1 7/16	MP-23T	3-17T	7340 32648	2 1/8 54.0	8 203.2	5 127.0	6 3/8 161.9	2 1/4 57.2	3/4 19.1	4 3/16 106.4	2 50.8	1 1/4 31.8	2 11/16 68.3	1/2	7.1 3.22
1 1/2	MP-24T	3-18T	7901 35144	2 5/16 58.7	8 3/4 222.3	5 1/2 139.7	6 3/4 171.5	2 5/8 66.7	13/16 20.6	4 9/16 115.9	2 50.8	1 1/4 31.8	2 13/16 71.4	5/8	9.3 4.22
1 11/16 1 3/4	MP-27T MP-28T	3-111T 3-112T	7889 35090	2 5/16 58.7	8 3/4 222.3	5 7/16 138.1	6 13/16 173.0	2 5/8 66.7	13/16 20.6	4 5/8 117.5	2 3/32 53.2	1 11/32 34.1	3 1/4 82.6	5/8	10.1 4.58
1 15/16 2	MP-31T MP-32T	3-115T 2-2T	9752 43377	2 1/2 63.5	9 1/2 241.3	5 15/16 150.8	7 9/16 192.1	2 7/8 73.0	7/8 22.2	5 3/32 129.4	2 1/4 57.2	1 3/8 34.9	3 1/2 88.9	5/8	12.3 5.58
2 3/16 2 1/4	MP-35T MP-36T	3-23T 2-24T	11789 52437	2 3/4 69.9	10 1/4 260.4	6 9/16 166.7	7 15/16 201.6	3 1/8 79.4	1 1/16 27.0	5 5/8 142.9	2 5/8 66.7	1 5/8 41.3	4 1/16 103.2	3/4	17.4 7.89

For Medium Duty SKWEZLOC Locking Collar Bearing inserts see page G-96. For Replacement Lock Collar see page G-98.

SEALMASTER® Performance Mounted Ball Bearings

Duty: Medium

Rolling Elements: Ball

Housing: Cast Iron Pillow Block - High Base

Self Alignment: +/- 2 Degrees

Lock: Double Setscrew

Seal: Felt

Optional Seal: Contact

Temperature: -20° to 220°F

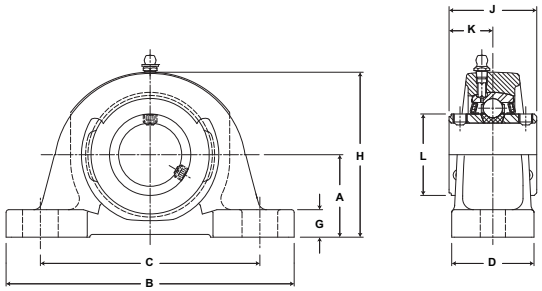

MPD Series Medium Duty Pillow Blocks With Double Lock - Setscrew Locking

Bore Diameter inch	Part No.	Bearing Insert No.	Basic Dynamic Rating lb/N	Dimensions inch / mm A	B	C min.	C max.	D	G	H	J	K	L	Bolt Size	Unit Wt. lb/kg
1	MPD-16	3-1D	4381 19487	1 3/4 44.5	6 1/4 158.8	4 3/16 106.4	5 3/16 131.8	2 50.8	5/8 15.9	3 7/16 87.3	1 3/4 44.5	7/8 22.2	1 19/32 40.5	1/2	4.0 1.81
1 3/16 1 1/4	MPD-19 MPD-20	3-13D 2-14D	5782 25718	1 7/8 47.6	6 7/8 174.6	4 1/2 114.3	5 1/2 139.7	2 1/4 57.2	11/16 17.5	3 13/16 96.8	2 50.8	1 25.4	1 55/64 47.2	1/2	5.4 2.45
1 7/16	MPD-23	3-17D	7340 32648	2 1/8 54.0	8 203.2	5 127.0	6 3/8 161.9	2 1/4 57.2	3/4 19.1	4 3/16 106.4	2 5/16 58.7	1 5/32 29.4	2 1/16 52.4	1/2	6.8 3.08
1 1/2	MPD-24	3-18D	7901 35144	2 5/16 58.7	8 3/4 222.3	5 1/2 139.7	6 3/4 171.5	2 5/8 66.7	13/16 20.6	4 9/16 115.9	2 3/8 60.3	1 3/16 30.2	2 19/64 58.3	5/8	9.0 4.08
1 11/16 1 3/4	MPD-27 MPD-28	3-111D 3-112D	7889 35090	2 5/16 58.7	8 3/4 222.3	5 7/16 138.1	6 13/16 173.0	2 5/8 66.7	13/16 20.6	4 5/8 117.5	2 1/2 63.5	1 1/4 31.8	2 15/32 62.7	5/8	9.5 4.31
1 15/16 2	MPD-31 MPD-32	3-115D 2-2D	9752 43377	2 1/2 63.5	9 1/2 241.3	5 15/16 150.8	7 9/16 192.1	2 7/8 73.0	7/8 22.2	5 3/32 129.4	2 5/8 66.7	1 5/16 33.3	2 23/32 69.1	5/8	11.7 5.31
2 3/16 2 1/4	MPD-35 MPD-36	3-23D 2-24D	11789 52437	2 3/4 69.9	10 1/4 260.4	6 9/16 166.7	7 15/16 201.6	3 1/8 79.4	1 1/16 27.0	5 5/8 142.9	3 1/8 79.4	1 9/16 39.7	2 63/64 75.8	3/4	16.2 7.35
2 7/16 2 1/2	MPD-39 MPD-40	3-27D 3-28D	13971 62143	3 76.2	11 1/4 285.8	7 1/8 181.0	8 7/8 225.4	3 1/4 82.6	1 1/16 27.0	6 1/4 158.8	3 1/2 88.9	1 3/4 44.5	3 7/16 87.3	3/4	21.5 9.75
2 11/16	MPD-43	3-211D	14839 66004	3 1/2 88.9	13 330.2	7 7/8 200.0	10 1/8 257.2	3 1/2 88.9	1 1/8 28.6	7 177.8	3 1/2 88.9	1 3/4 44.5	3 41/64 92.5	7/8	29.2 13.24
2 15/16 3	MPD-47 MPD-48	3-215D 3-3D	17412 77449	3 1/2 88.9	13 330.2	7 7/8 200.0	10 1/8 257.2	3 1/2 88.9	1 1/4 31.8	7 1/4 184.2	3 7/8 98.4	1 15/16 49.2	3 59/64 99.6	7/8	31.5 14.29
3 3/16 3 1/4	MPD-51 MPD-52	3-33D 2-34D	18681 83093	4 101.6	15 381.0	9 11/16 246.1	12 9/16 319.1	4 101.6	1 1/4 31.8	8 203.2	4 1/16 103.2	2 1/32 51.6	4 5/32 105.6	7/8	44.1 20.00
3 7/16 3 1/2	MPD-55 MPD-56	3-37D 2-38D	21566 95926	4 101.6	15 381.0	9 5/8 244.5	12 5/8 320.7	4 3/8 111.1	1 5/16 33.3	8 1/4 209.6	4 7/16 112.7	2 7/32 56.4	4 25/64 111.5	7/8	47.8 21.68
3 15/16 4	MPD-63 MPD-64	3-315D 3-4D	29905 133017	5 127.0	17 431.8	11 3/4 298.5	14 3/4 374.7	4 3/4 120.7	1 5/16 33.3	10 254.0	5 3/8 136.5	2 11/16 68.3	5 11/64 131.4	1	73.2 33.20

For Medium Duty Bearing Inserts-Double Lock see page G-97.

Metric dimensions for reference only.
Not all parts are available from stock. Please contact customer service for availability (800) 626-2120.
For more information on bearing capabilities outside of our standard offering, please contact Application Engineering (800) 626-2093.

Performance Mounted Ball Bearings

SEALMASTER®

Duty: Medium

Rolling Elements: Ball

Housing: Cast Iron Four Bolt Pillow Block - High Base

Self Alignment +/- 2 Degrees

Lock: Setscrew

Seal: Felt

Optional Seal: Contact

Temperature: -20° to 220°F

Relube: Relube

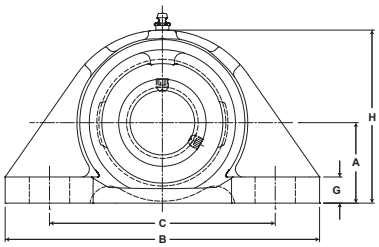

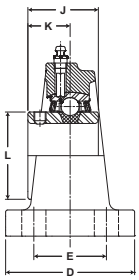

MFP Series Medium Duty Four-Bolt Base Pillow Blocks - Setscrew Locking

Bore Diameter inch	Bore Diameter mm	Part No.	Bearing Insert No.	Basic Dynamic Rating lb/N	Dimensions inch / mm A	B	C min.	C max.	D	E	G	H	J	K	L	Bolt Size	Unit Wt. lb/kg
1 15/16		MFP-31	3-115	9752	2 1/2	9 3/4	6 3/8	7 5/8	4	2 1/4	13/16	5 3/8	2 3/16	1 5/16	2 23/32	5/8	13.7
2		MFP-32	2-2	43377	63.5	247.7	161.9	193.7	101.6	57.2	20.6	136.5	55.6	33.3	69.1		6.21
	50	MFP-310	5310														
2 3/16		MFP-35	3-23	11789	2 3/4	10 1/4	6 7/8	8 1/8	4 1/8	2 1/4	7/8	5 13/16	2 9/16	1 9/16	2 63/64	5/8	17.0
2 1/4		MFP-36	2-24	52437	69.9	260.4	174.6	206.4	104.8	57.2	22.2	147.6	65.1	39.7	75.8		7.71
	55	MFP-311	5311														
2 7/16		MFP-39	3-27	13971	3	11 1/4	7 1/2	9	4 1/2	2 5/8	1	6 1/2	2 3/4	1 11/16	3 7/16	5/8	23.3
2 1/2		MFP-40	3-28	62143	76.2	285.8	190.5	228.6	114.3	66.7	25.4	165.1	69.9	42.9	87.3		10.57
	65	MFP-313	5313														
2 11/16		MFP-43	3-211	14839	3 1/2	13	9	10 1/2	5	2 3/4	1 1/8	7 1/4	3 1/16	1 3/4	3 41/64	3/4	34.0
	70	MFP-314	5314	66004	88.9	330.2	228.6	266.7	127.0	69.9	28.6	184.2	77.8	44.5	92.5		15.42
2 15/16		MFP-47	3-215	17412	3 1/2	13	9	10 1/2	5	2 3/4	1	7 3/8	3 1/4	1 15/16	3 59/64	3/4	36.5
3		MFP-48	3-3	77449	88.9	330.2	228.6	266.7	127.0	69.9	25.4	187.3	82.6	49.2	99.6		16.56
	75	MFP-315	5315														
3 3/16		MFP-51	3-33	18681	4	15	10 3/4	12 1/4	5	3	1 1/16	8 7/16	3 3/8	2 1/32	4 5/32	3/4	44.5
3 1/4		MFP-52	2-34	83093	101.6	381.0	273.1	311.2	127.0	76.2	27.0	214.3	85.7	51.6	105.6		20.18
	80	MFP-316	5316														
3 7/16		MFP-55	3-37	21566	4	15	10 3/4	12 1/4	5	3	1 1/16	8 7/16	3 25/32	2 7/32	4 25/64	3/4	48.6
3 1/2		MFP-56	2-38	95926	101.6	381.0	273.1	311.2	127.0	76.2	27.0	214.3	96.0	56.4	111.5		22.04
3 15/16		MFP-63	3-315	29905	5	17	12 7/16	14 1/16	6	3 1/2	1 1/4	10 1/4	4 5/8	2 11/16	5 11/64	7/8	83.5
4		MFP-64	3-4	133017	127.0	431.8	315.9	357.2	152.4	88.9	31.8	260.4	117.5	68.3	131.4		37.87
	100	MFP-320	5320														

For Medium Duty Bearing Inserts-Single Lock see page G-95.

SEALMASTER® Performance Mounted Ball Bearings

Duty: Medium

Rolling Elements: Ball

Housing: Cast Iron Four Bolt Pillow Block - High Base

Self Alignment: +/- 2 Degrees

Lock: Double Setscrew

Seal: Felt

Optional Seal: Contact

Temperature: -20° to 220°F

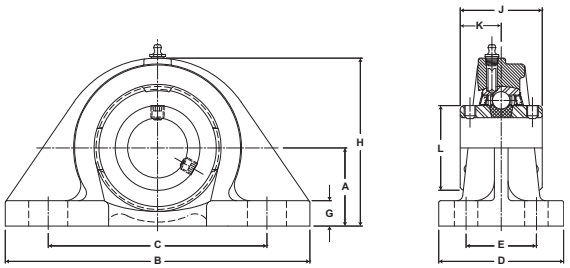

MFPD Series Medium Duty Four-Bolt Base Pillow Blocks With Double Lock - Setscrew Locking

Bore Diameter inch	Part No.	Bearing Insert No.	Basic Dynamic Rating lb/N	Dimensions inch / mm											Bolt Size	Unit Wt. lb/kg
				A	B	C min.	C max.	D	E	G	H	J	K	L		
1 15/16	MFPD-31	3-115D	9752 43377	2 1/2 63.5	9 3/4 247.7	6 3/8 161.9	7 5/8 193.7	4 101.6	2 1/4 57.2	13/16 20.6	5 3/8 136.5	2 5/8 66.7	1 5/16 33.3	2 23/32 69.1	5/8	13.7 6.21
2 3/16	MFPD-35	3-23D	11789 52437	2 3/4 69.9	10 1/4 260.4	6 7/8 174.6	8 1/8 206.4	4 1/8 104.8	2 1/4 57.2	7/8 22.2	5 13/16 147.6	3 1/8 79.4	1 9/16 39.7	2 63/64 75.8	5/8	17 7.71
2 7/16 2 1/2	MFPD-39 MFPD-40	3-27D 3-28D	13971 62143	3 76.2	11 1/4 285.8	7 1/2 190.5	9 228.6	4 1/2 114.3	2 5/8 66.7	1 25.4	6 1/2 165.1	3 1/2 88.9	1 3/4 44.5	3 7/16 87.3	5/8	23.3 10.57
2 11/16	MFPD-43	3-211D	14839 66004	3 1/2 88.9	13 330.2	9 228.6	10 1/2 266.7	5 127.0	2 3/4 69.9	1 1/8 28.6	7 1/4 184.2	3 1/2 88.9	1 3/4 44.5	3 41/64 92.5	3/4	34 863.6
2 15/16 3	MFPD-47 MFPD-48	3-215D 3-3D	17412 77449	3 1/2 88.9	13 330.2	9 228.6	10 1/2 266.7	5 127.0	2 3/4 69.9	1 25.4	7 3/8 187.3	3 7/8 98.4	1 15/16 49.2	3 59/64 99.6	3/4	36.5 16.56
3 7/16 3 1/2	MFPD-55 MFPD-56	3-37D 2-38D	21566 95926	4 101.6	15 381.0	25 3/4 654.1	12 1/4 311.2	5 127.0	3 76.2	1 1/16 27.0	8 7/16 214.3	4 39/89 112.7	2 7/32 56.4	4 25/64 111.5	3/4	48.6 22.04
3 15/16 4	MFPD-63 MFPD-64	3-315D 3-4D	29905 133017	5 127.0	17 431.8	12 7/16 315.9	14 1/16 357.2	6 152.4	3 1/2 88.9	1 1/4 31.8	10 1/4 260.4	5 3/8 136.5	2 11/16 68.3	5 11/64 131.4	7/8	83.5 37.87
4 7/16 4 15/16 5	MFPD-71* MFPD-79* MFPD-80	3-47D 3-415D 3-500D	37482 166720	6 152.4	19 482.6	14 355.6	16 406.4	5 1/2 139.7	3 1/4 82.6	1 5/8 41.3	12 1/8 308.0	5 3/4 146.1	2 7/8 73.0	6 11/32 161.1	1	130.0 58.97

* Units MFPD-71, MFPD-79 and MFPD-80 are not available with contact seal.
For Medium Duty Bearing Inserts-Double Lock see page G-97.

Metric dimensions for reference only.
Not all parts are available from stock. Please contact customer service for availability (800) 626-2120.
For more information on bearing capabilities outside of our standard offering, please contact Application Engineering (800) 626-2093.

Performance Mounted Ball Bearings

SEALMASTER®

Duty: Medium

Rolling Elements: Ball

Housing: Cast Iron Pillow Block – Heavy Duty

Self Alignment: +/- 2 Degrees

Lock: Double Setscrew

Seal: Felt

Optional Seal: Contact

Temperature: -20° to 220°F

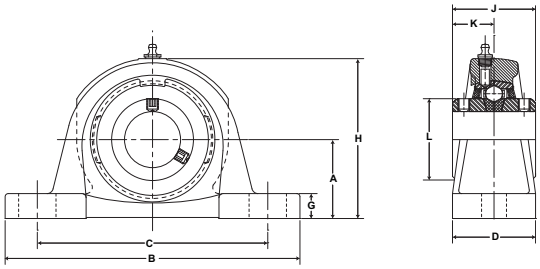

MSPD Series Medium Duty Pillow Blocks With Double Lock - Setscrew Locking

Bore Diameter inch	Part No.	Bearing Insert No.	Basic Dynamic Rating lb/N	Dimensions inch / mm										Bolt Size	Unit Wt. lb/kg
				A	B	C min.	C max.	D	G	H	J	K	L		
1 11/16 1 3/4	MSPD-27 MSPD-28	3-111D 3-112D	7889 35090	2 3/8 60.3	8 7/8 225.4	6 7/16 163.5	7 7/16 188.9	2 1/2 63.5	3/4 19.1	4 13/16 122.2	2 1/2 63.5	1 1/4 31.8	2 1/2 63.5	5/8	9.5 4.31
1 15/16 2	MSPD-31 MSPD-32	3-115D 2-2D	9752 43377	2 3/4 69.9	10 254.0	7 1/8 181.0	8 3/8 212.7	2 5/8 66.7	7/8 22.2	5 7/16 138.1	2 5/8 66.7	1 5/16 33.3	2 5/8 66.7	5/8	12.5 5.67
2 3/16 2 1/4	MSPD-35 MSPD-36	3-23D 2-24D	11789 52437	3 1/8 79.4	10 7/8 276.2	7 7/8 200.0	9 3/8 238.1	2 3/4 69.9	15/16 23.8	6 1/16 154.0	3 1/8 79.4	1 9/16 39.7	2 63/64 75.8	5/8	17.0 7.71
2 7/16 2 1/2	MSPD-39 MSPD-40	3-27D 3-28D	13971 62143	3 1/8 79.4	11 3/4 298.5	8 3/4 222.3	9 7/8 250.8	3 76.2	1 25.4	6 5/16 160.3	3 1/2 88.9	1 3/4 44.5	3 1/2 88.9	3/4	22.0 9.98
2 11/16	MSPD-43	3-211D	14839 66004	3 3/4 95.3	13 3/8 339.7	10 1/8 257.2	11 3/8 288.9	3 1/4 82.6	1 25.4	7 5/16 185.7	3 1/2 88.9	1 3/4 44.5	3 1/2 88.9	3/4	28.0 12.70
2 15/16 3	MSPD-47 MSPD-48	3-215D 3-3D	17412 77449	3 3/4 95.3	13 3/4 349.3	10 254.0	11 1/2 292.1	3 3/8 85.7	1 3/16 30.2	7 1/2 190.5	3 7/8 98.4	1 15/16 49.2	3 7/8 98.4	7/8	33.0 14.97
3 7/16 3 1/2	MSPD-55 MSPD-56	3-37D 2-38D	21566 95926	4 9/16 115.9	15 3/8 390.5	12 1/8 308.0	13 1/2 342.9	4 101.6	1 1/4 31.8	8 13/16 223.8	4 7/16 112.7	2 7/32 56.4	4 7/16 112.7	7/8	51.0 23.13
3 15/16 4	MSPD-63 MSPD-64	3-315D 3-4D	29905 133017	5 1/8 130.2	17 431.8	13 1/8 333.4	14 3/4 374.7	4 3/4 120.7	1 1/4 31.8	10 1/8 257.2	5 3/8 136.5	2 11/16 68.3	5 3/8 136.5	1	74.5 33.79
4 7/16 4 15/16	MSPD-71 MSPD-79	3-47D * 3-415D *	37482 166720	6 1/4 158.8	21 1/4 539.8	15 1/16 382.6	18 3/16 462.0	6 1/4 158.8	1 3/4 44.5	12 1/2 317.5	5 3/4 146.1	2 7/8 73.0	5 3/4 146.1	1 1/8	159.0 72.12

* Units MSPD-71 and MSPD-79 are not available with contact seal.
For Medium Duty Bearing Inserts-Double Lock see page G-97.

SEALMASTER® Performance Mounted Ball Bearings

Duty: Medium

Rolling Elements: Ball

Housing: Cast Iron Four Bolt Pillow Block – Heavy Duty

Self Alignment: +/- 2 Degrees

Lock: Double Setscrew

Seal: Felt

Optional Seal: Contact

Temperature: -20° to 220°F

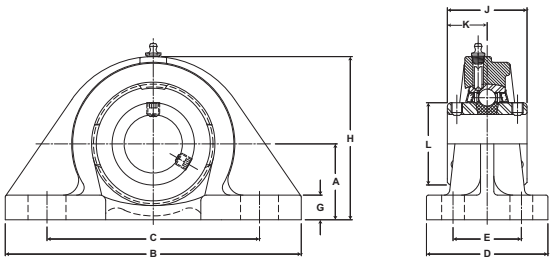

MSFPD Series Medium Duty Four-Bolt Base Pillow Blocks With Double Lock - Setscrew Locking

Bore Diameter inch	Part No.	Bearing Insert No.	Basic Dynamic Rating lb/N	Dimensions inch / mm A	B	C min.	C max.	D	E	G	H	J	K	L	Bolt Size	Unit Wt. lb/kg
1 15/16 2	MSFPD-31 MSFPD-32	3-115D 2-2D	9752 43377	2 3/4 69.9	9 3/4 247.7	6 3/8 161.9	7 5/8 193.7	4 101.6	2 1/4 57.2	1 1/16 27.0	5 5/8 142.9	2 5/8 66.7	1 5/16 33.3	2 5/8 66.7	5/8	15.4 6.99
2 3/16 2 1/4	MSFPD-35 MSFPD-36	3-23D 2-24D	11789 52437	3 1/8 79.4	10 1/4 260.4	6 7/8 174.6	8 1/8 206.4	4 1/8 104.8	2 1/4 57.2	1 1/4 31.8	6 3/16 157.2	3 1/8 79.4	1 9/16 39.7	2 63/64 75.8	5/8	20.1 9.12
2 7/16 2 1/2	MSFPD-39 MSFPD-40	3-27D 3-28D	13971 62143	3 1/8 79.4	11 5/16 287.3	7 1/2 190.5	9 228.6	4 1/2 114.3	2 5/8 66.7	1 1/8 28.6	6 5/8 168.3	3 1/2 88.9	1 3/4 44.5	3 1/2 88.9	5/8	25.4 11.52
2 11/16	MSFPD-43	3-211D	14839 66004	3 3/4 95.3	13 330.2	9 228.6	10 1/2 266.7	5 127.0	2 3/4 69.9	1 3/8 34.9	7 1/2 190.5	3 1/2 88.9	1 3/4 44.5	3 1/2 88.9	3/4	37.3 16.92
2 15/16 3	MSFPD-47 MSFPD-48	3-215D 3-3D	17412 77449	3 3/4 95.3	13 330.2	9 228.6	10 1/2 266.7	5 127.0	2 3/4 69.9	1 1/4 31.8	7 5/8 193.7	3 7/8 98.4	1 15/16 49.2	3 7/8 98.4	3/4	40.1 18.19
3 3/16 3 1/4	MSFPD-51 MSFPD-52	3-33D 2-34D	18681 83093	4 1/8 104.8	15 381.0	10 3/4 273.1	12 1/4 311.2	5 127.0	3 76.2	1 3/16 30.2	8 9/16 217.5	4 1/16 103.2	2 1/32 51.6	4 5/32 105.6	3/4	51.2 23.22
3 7/16 3 1/2	MSFPD-55 MSFPD-56	3-37D 2-38D	21566 95926	4 9/16 115.9	15 381.0	10 3/4 273.1	12 1/4 311.2	5 127.0	3 76.2	1 1/4 31.8	9 228.6	4 7/16 112.7	2 7/32 56.4	4 7/16 112.7	3/4	51.8 23.50
3 15/16 4	MSFPD-63 MSFPD-64	3-315D 3-4D	29905 133017	5 1/8 130.2	17 431.8	12 7/16 315.9	14 1/16 357.2	6 152.4	3 1/2 88.9	1 3/8 34.9	10 3/8 263.5	5 3/8 136.5	2 11/16 68.3	5 3/8 136.5	7/8	84.6 38.37
4 7/16 4 15/16	MSFPD-71 MSFPD-79	3-47D 3-415D	37482 166720	6 1/4 158.8	19 482.6	14 355.6	16 406.4	5 1/2 139.7	3 1/4 82.6	1 7/8 47.6	12 3/8 314.3	5 3/4 146.1	2 7/8 73.0	5 3/4 146.1	1	136.0 61.69

For Medium Duty Bearing Inserts-Double Lock see page G-97.
Units MSFPD-71 and MSFPD-79 are not available with contact seal.

Metric dimensions for reference only.
Not all parts are available from stock. Please contact customer service for availability (800) 626-2120.
For more information on bearing capabilities outside of our standard offering, please contact Application Engineering (800) 626-2093.

Performance Mounted Ball Bearings

SEALMASTER®

Duty: Medium

Rolling Elements: Ball

Housing: Cast Iron Pillow Block - Heavy Duty

Self Alignment: +/- 2 Degrees

Lock: Setscrew

Seal: Felt

Optional Seal: Contact

Temperature: -20° to 220°F

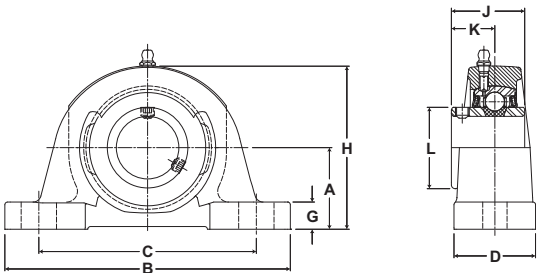

SPM Series Medium Duty Pillow Blocks - Setscrew Locking

Bore Diameter inch	Part No.	Bearing Insert No.	Basic Dynamic Rating lb/N	Dimensions inch / mm										Bolt Size	Unit Wt. lb/kg
				A	B	C min.	C max.	D	G	H	J	K	L		
1 3/16	SPM-19	3-13	5782 25718	2 50.8	7 1/2 190.5	5 3/8 136.5	6 1/8 155.6	2 50.8	5/8 15.9	3 7/8 98.4	1 11/16 42.9	1 25.4	1 55/64 47.2	1/2	6.9 3.13
1 7/16	SPM-23	3-17	7340 32648	2 3/8 60.3	8 1/4 209.6	5 5/8 142.9	6 7/8 174.6	2 1/4 57.2	3/4 19.1	4 1/2 114.3	1 15/16 49.2	1 3/16 30.2	2 1/16 52.4	5/8	7.1 3.22
1 11/16 1 3/4	SPM-27 SPM-28	3-111 3-112	7889 35090	2 3/8 60.3	8 3/4 222.3	5 7/8 149.2	7 1/8 181.0	2 3/8 60.3	3/4 19.1	4 5/8 117.5	2 1/32 51.6	1 9/32 32.5	2 15/32 62.7	5/8	9.7 4.40
1 15/16	SPM-31	3-115	9752 43377	2 3/4 69.9	10 1/2 266.7	6 3/4 171.5	8 1/2 215.9	2 1/2 63.5	7/8 22.2	5 5/16 134.9	2 3/16 55.6	1 5/16 33.3	2 23/32 69.1	5/8	11.9 5.40
2 3/16	SPM-35	3-23	11789 52437	3 1/8 79.4	11 1/4 285.8	7 5/8 193.7	9 3/8 238.1	2 3/4 69.9	7/8 22.2	5 15/16 150.8	2 9/16 65.1	1 9/16 39.7	2 63/64 75.8	5/8	16.6 7.53
2 7/16 2 1/2	SPM-39 SPM-40	3-27 3-28	13971 62143	3 1/8 79.4	11 1/2 292.1	7 7/8 200.0	9 3/8 238.1	3 76.2	7/8 22.2	6 1/4 158.8	2 3/4 69.9	1 11/16 42.9	3 7/16 87.3	3/4	20.1 9.12

For Medium Duty Bearing Inserts-Single Lock see page G-95.

SEALMASTER® Performance Mounted Ball Bearings

Duty: Standard

Rolling Elements: Ball

Housing: Cast Iron Tapped Base Pillow Block

Self Alignment: +/- 2 Degrees

Lock: Setscrew

Seal: Felt

Optional Seal: Contact

Temperature: -20° to 220°F

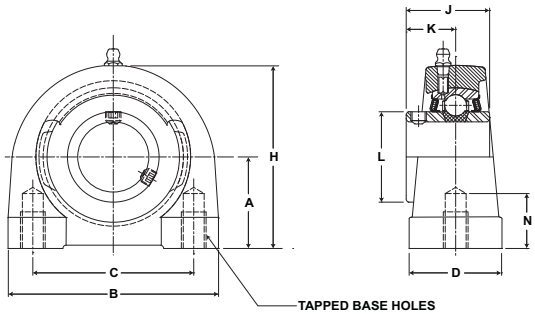

TB Series Tapped Base Pillow Blocks - Setscrew Locking

Bore Diameter inch	Bore Diameter mm	Part No.	Bearing Insert No.	Basic Dynamic Rating lb/N	Dimensions inch / mm A	B	C	D	H	J	K	L	N Tap Depth	Bolt UNC-2B Thread	Unit Wt. lb/kg
1/2		TB-8	2-08												
9/16		TB-9	2-09												
5/8		TB-10	2-010	2611	1 5/16	3 1/8	2	1 1/2	2 9/16	1 7/32	23/32	1 3/16	1/2	3/8-16	1.8
11/16		TB-11	2-011	11614	33.3	79.4	50.8	38.1	65.1	31.0	18.3	30.2	12.7		.82
3/4		TB-12	2-012												
	20	TB-204	5204												
7/8		TB-14	2-014												
15/16		TB-15	2-015	2801	1 7/16	3	2	1 1/2	2 13/16	1 3/8	13/16	1 3/8	1/2	3/8-16	2.0
1		TB-16	2-1	12459	36.5	76.2	50.8	38.1	71.4	34.9	20.6	34.9	12.7		.91
	25	TB-205	5205												
1 1/16		TB-17	2-11												
1 1/8		TB-18	2-12												
1 3/16		TB-19	2-13	4381	1 11/16	4	3	1 1/2	3 13/32	1 1/2	7/8	1 19/32	5/8	7/16-14	3.5
1 1/4		TB-20R	1-14	19487	42.9	101.6	76.2	38.1	86.5	38.1	22.2	40.5	15.9		1.59
	30	TB-206	5206												
1 1/4		TB-20	2-14												
1 5/16		TB-21	2-15												
1 3/8		TB-22	2-16	5782	1 7/8	4 1/4	3 1/4	1 7/8	3 3/4	1 11/16	1	1 55/64	3/4	1/2-13	4.5
1 7/16		TB-23	2-17	25718	47.6	108.0	82.6	47.6	95.3	42.9	25.4	47.2	19.1		2.04
	35	TB-207	5207												
1 1/2		TB-24	2-18	7340	1 15/16	4 5/8	3 1/2	1 7/8	3 15/16	1 15/16	1 3/16	2 1/16	3/4	1/2-13	6.0
1 9/16		TB-25	2-19	32648	49.2	117.5	88.9	47.6	100.0	49.2	30.2	52.4	19.1		2.72
	40	TB-208	5208												
1 5/8		TB-26	2-110												
1 11/16		TB-27	2-111	7901	2 1/8	5	3 3/4	2	4 1/4	1 15/16	1 3/16	2 19/64	3/4	1/2-13	6.5
1 3/4		TB-28	2-112	35144	54.0	127.0	95.3	50.8	108.0	49.2	30.2	58.3	19.1		2.95
	45	TB-209	5209												
1 7/8		TB-30	2-114												
1 15/16		TB-31	2-115	7889	2 1/4	5 1/2	4	2	4 5/8	2 1/32	1 9/32	2 15/32	7/8	5/8-11	8.0
2		TB-32R	1-2	35090	57.2	139.7	101.6	50.8	117.5	51.6	32.5	62.7	22.2		3.63
	50	TB-210	5210												

For Standard Duty Bearing Inserts-Single Lock see page G-92.

Metric dimensions for reference only.
Not all parts are available from stock. Please contact customer service for availability (800) 626-2120.
For more information on bearing capabilities outside of our standard offering, please contact Application Engineering (800) 626-2093.

Performance Mounted Ball Bearings

SEALMASTER®

Duty: Standard
Rolling Elements: Ball
Housing: Cast Iron Tapped Base Pillow Block
Self Alignment: +/- 2 Degrees
Lock: SKWEZLOC Locking Collar
Seal: Felt
Optional Seal: Contact
Temperature: -20° to 220°F

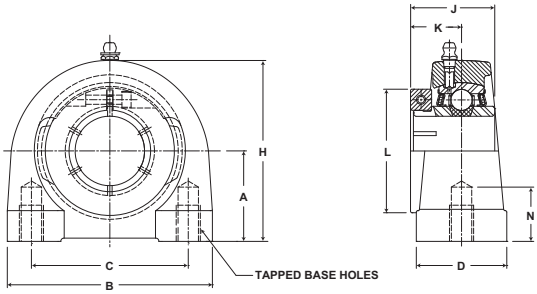

TB-T Series Standard Duty Tapped Base Pillow Block - SKWEZLOC Locking Collar - Inch

Bore Diameter inch	Part No.	Bearing Insert No.	Basic Dynamic Rating lb/N	Dimensions inch / mm A	B	C	D	H	J	K	L	N Tap Depth	Bolt UNC-2B Thread	Unit Wt. lb/kg
3/4	*TB-12T	2-012T	2611 11614	1 5/16 33.3	3 1/8 79.4	2 50.8	1 1/2 38.1	2 9/16 65.1	1 9/32 32.5	25/32 19.8	1 3/4 44.5	1/2 12.7	3/8-16	1.8 .82
15/16 1	TB-15T TB-16T	2-015T 2-1T	2801 12459	1 7/16 36.5	3 76.2	2 50.8	1 1/2 38.1	2 13/16 71.4	1 7/16 36.5	7/8 22.2	1 15/16 49.2	1/2 12.7	3/8-16	2.0 .91
1 1/8 1 3/16 1 1/4	TB-18T TB-19T TB-20RT	2-12T 2-13T 1-14T	4381 19487	1 11/16 42.9	4 101.6	3 76.2	1 1/2 38.1	3 13/32 86.5	1 9/16 39.7	15/16 23.8	2 3/16 55.6	5/8 15.9	7/16-14	3.7 1.68
1 1/4	TB-20T	2-14T	5782 25718	1 7/8 47.6	4 1/4 108.0	3 1/4 82.6	1 7/8 47.6	3 3/4 95.3	1 3/4 44.5	1 1/16 27.0	2 7/16 61.9	3/4 19.1	1/2-13	4.8 2.18
1 3/8 1 7/16	TB-22T TB-23T	2-16T 2-17T	5782 25718	1 7/8 47.6	4 1/4 108.0	3 1/4 82.6	1 7/8 47.6	3 3/4 95.3	1 3/4 44.5	1 1/16 27.0	2 9/16 65.1	3/4 19.1	1/2-13	4.8 2.18
1 1/2	TB-24T	2-18T	7340 32648	1 15/16 49.2	4 5/8 117.5	3 1/2 88.9	1 7/8 47.6	3 15/16 100.0	2 50.8	1 1/4 31.8	2 11/16 68.3	3/4 19.1	1/2-13	6.3 2.86
1 5/8	TB-26T	2-110T	7901 35144	2 1/8 54.0	5 127.0	3 3/4 95.3	2 50.8	4 1/4 108.0	2 50.8	1 1/4 31.8	2 13/16 71.4	3/4 19.1	1/2-13	6.8 3.08
1 11/16 1 3/4	TB-27T TB-28T	2-111T 2-112T	7901 35144	2 1/8 54.0	5 127.0	3 3/4 95.3	2 50.8	4 1/4 108.0	2 50.8	1 1/4 31.8	2 15/16 74.6	3/4 19.1	1/2-13	6.8 3.08
1 15/16 2	TB-31T TB-32RT	2-115T 1-2T	7889 35090	2 1/4 57.2	5 1/2 139.7	4 101.6	2 50.8	4 5/8 117.5	2 3/32 53.2	1 11/32 34.1	3 3/8 85.7	7/8 22.2	5/8-11	8.6 3.90

* Bearing reversed in housing for collar clearance

TB-T Series Standard Duty Tapped Base Pillow Block - SKWEZLOC Locking Collar - Metric -SKWEZ™

Bore Diameter mm	Part No.	Bearing Insert No.	Basic Dynamic Rating N/lb	Dimensions mm / inch A	B	C	D	H	J	K	L	N Min. Tap Depth	M Bolt Thread mm	Unit Wt. kg/lb
20	*TB-204TMC	5204TMC	11614 2611	33.3 1 5/16	79.4 3 1/8	52.0 2 3/64	38.1 1 1/2	65.1 2 9/16	32.5 1 9/32	19.8 25/32	44.5 1 3/4	11 7/16	M10 x 1.5	.82 1.8
25	TB-205TMC	5205TMC	12459 2801	36.5 1 7/16	76.2 3	56.0 2 13/64	38.1 1 1/2	71.4 2 13/16	36.5 1 7/16	22.2 7/8	49.2 1 15/16	11 7/16	M10 x 1.5	.91 2.0
30	TB-206TMC	5206TM	19487 4381	42.9 1 11/16	101.6 4	65.9 2 19/32	38.1 1 1/2	86.5 3 13/32	39.7 1 9/16	23.8 15/16	55.6 2 3/16	16 5/8	M14 x 2.0	1.68 3.7
35	TB-207TMC	5207TMC	25718 5782	47.6 1 7/8	108.0 4 1/4	80.2 3 5/32	47.6 1 7/8	95.3 3 3/4	44.5 1 3/4	27.0 1 1/16	65.1 2 9/16	17.5 11/16	M14 x 2.0	2.18 4.8
40	TB-208TMC	5208TMC	32648 7340	49.2 1 15/16	117.5 4 5/8	84.1 3 5/16	47.6 1 7/8	100.0 3 15/16	50.8 2	31.8 1 1/4	68.3 2 11/16	17.5 11/16	M14 x 2.0	2.86 6.3
45	TB-209TMC	5209TMC	35144 7901	54.0 2 1/8	127.0 5	90.1 3 35/64	50.8 2	108.0 4 1/4	50.8 2	31.8 1 1/4	74.6 2 15/16	22 7/8	M14 x 2.0	3.08 6.8
50	TB-210TMC	5210TMC	35090 7889	57.2 2 1/4	139.7 5 1/2	94.1 3 45/64	50.8 2	117.5 4 5/8	53.2 2 3/32	34.1 1 11/32	85.7 3 3/8	22 7/8	M16 x 2.0	3.90 8.6

* Bearing reversed in housing for collar clearance
For Standard Duty SKWELOC Single Locking Collar Bearing Inserts see page G-93. For Replacement Lock Collar see page G-98.

SEALMASTER® Performance Mounted Ball Bearings

Duty: Standard
Rolling Elements: Ball
Housing: Cast Iron Four Bolt Flange
Self Alignment: +/- 2 Degrees
Lock: Setscrew
Seal: Felt
Optional Seal: Contact
Temperature: -20° to 220°F

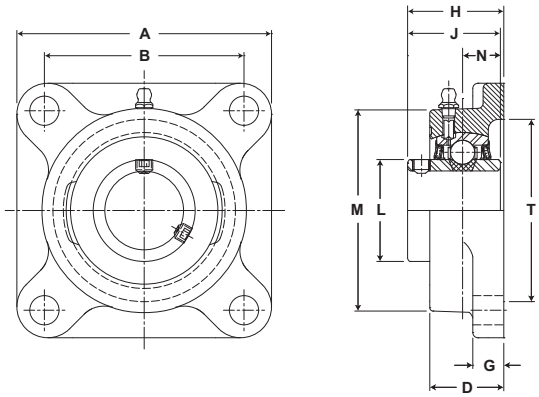

SF Series Standard Duty Four-Bolt Flange Units - Setscrew Locking

Bore Diameter inch	Bore Diameter mm	Part No.	Bearing Insert No.	Basic Dynamic Rating lb/N	Dimensions inch / mm A	B*	D	G	H	J	N	L	M	T Core	Bolt Size	Unit Wt. lb/kg
1/2 9/16 5/8 11/16		SF-8 SF-9 SF-10 SF-11	2-08 2-09 2-010 2-011	2611 11614	3 76.2	2 1/8 54.0	59/64 23.4	7/16 11.1	1 9/32 32.5	1 7/32 31.0	1/2 12.7	1 3/16 30.2	2 17/64 57.5	2 50.8	3/8	1.4 .64
3/4	20	SF-12 SF-204	2-012 5204	2611 11614	3 3/8 85.7	2 1/2 63.5	59/64 23.4	7/16 11.1	1 9/32 32.5	1 7/32 31.0	1/2 12.7	1 3/16 30.2	2 11/32 59.5	2 50.8	3/8	1.5 .68
13/16 7/8 15/16 1	25	SF-13 SF-14 SF-15 SF-16 SF-205	2-013 2-014 2-015 2-1 5205	2801 12459	3 3/4 95.3	2 3/4 69.9	1 1/32 26.2	17/32 13.5	1 7/16 36.5	1 3/8 34.9	9/16 14.3	1 3/8 34.9	2 23/32 69.1	2 3/8 60.3	7/16	2.1 .95
1 1/16 1 1/8 1 3/16 1 1/4	30	SF-17 SF-18 SF-19 SF-20R SF-206	2-11 2-12 2-13 1-14 5206	4381 19487	4 1/4 108.0	3 1/4 82.6	1 11/64 29.8	17/32 13.5	1 9/16 39.7	1 1/2 38.1	5/8 15.9	1 19/32 40.5	3 7/32 81.8	2 7/8 73.0	7/16	3.6 1.63
1 1/4 1 5/16 1 3/8 1 7/16	35	SF-20 SF-21 SF-22 SF-23 SF-207	2-14 2-15 2-16 2-17 5207	5782 25718	4 5/8 117.5	3 5/8 92.1	1 11/32 34.1	9/16 14.3	1 3/4 44.5	1 11/16 42.9	11/16 17.5	1 55/64 47.2	3 23/32 94.5	3 5/16 84.1	1/2	4.1 1.86
1 1/2 1 9/16	40	SF-24 SF-25 SF-208	2-18 2-19 5208	7340 32648	5 1/8 130.2	4 101.6	1 1/2 38.1	9/16 14.3	2 1/64 51.2	1 15/16 49.2	3/4 19.1	2 1/16 52.4	4 5/64 103.6	3 1/2 88.9	1/2	5.5 2.49
1 5/8 1 11/16 1 3/4	45	SF-26 SF-27 SF-28 SF-209	2-110 2-111 2-112 5209	7901 35144	5 3/8 136.5	4 1/8 104.8	1 9/16 39.7	9/16 14.3	2 3/64 52.0	1 15/16 49.2	3/4 19.1	2 19/64 58.3	4 21/64 109.9	3 7/8 98.4	9/16	5.7 2.59
1 13/16 1 7/8 1 15/16 2	50	SF-29 SF-30 SF-31 SF-32R SF-210	2-113 2-114 2-115 1-2 5210	7889 35090	5 5/8 142.9	4 3/8 111.1	1 9/16 39.7	9/16 14.3	2 5/32 54.8	2 1/32 51.6	3/4 19.1	2 15/32 62.7	4 33/64 114.7	4 101.6	9/16	6.4 2.90
2 2 1/8 2 3/16	55	SF-32 SF-34 SF-35 SF-211	2-2 2-22 2-23 5211	9752 43377	6 3/8 161.9	5 1/8 130.2	1 3/4 44.5	13/16 20.6	2 5/16 58.7	2 3/16 55.6	7/8 22.2	2 23/32 69.1	5 3/16 131.8	4 1/4 108.0	5/8	10.5 4.76
2 1/4 2 3/8 2 7/16	60	SF-36 SF-38 SF-39 SF-212	2-24 2-26 2-27 5212	11789 52437	6 7/8 174.6	5 5/8 142.9	1 15/16 49.2	13/16 20.6	2 11/16 68.3	2 9/16 65.1	1 25.4	2 63/64 75.8	5 7/16 138.1	5 127.0	5/8	11.8 5.35
2 1/2 2 11/16	70	SF-40 SF-43 SF-214	3-28 2-211 5214	13971 62143	7 3/8 187.3	5 7/8 149.2	2 5/16 58.7	11/16 17.5	3 76.2	2 3/4 69.9	1 1/16 27.0	3 7/16 87.3	6 1/8 155.6	5 1/8 130.2	5/8	16.4 7.44
2 7/8 2 15/16	75	SF-46 SF-47 SF-215	2-214 2-215 5215	14839 66004	7 3/4 196.9	6 152.4	2 3/8 60.3	1 25.4	3 3/16 81.0	3 1/16 77.8	1 5/16 33.3	3 41/64 92.5	6 1/2 165.1	5 7/8 149.2	3/4	19.4 8.80

For Standard Duty Bearing Inserts-Single Lock see page G-92.
*To obtain bolt circle, multiply B x 1.414".

Metric dimensions for reference only.

Performance Mounted Ball Bearings

SEALMASTER®

Duty: Standard
Rolling Elements: Ball
Housing: Cast Iron Four Bolt Flange
Self Alignment: +/- 2 Degrees
Lock: SKWEZLOC Locking Collar
Seal: Felt
Optional Seal: Contact
Temperature: -20° to 220°F

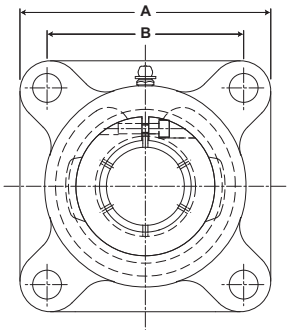

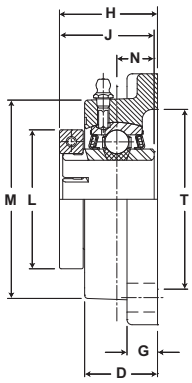

SF-T Series Standard Duty Four Bolt Flange - SKWEZLOC Locking Collar - Inch

Bore Diameter inch	Part No.	Bearing Insert No.	Basic Dynamic Rating lb/N	Dimensions inch / mm										Bolt Size	Unit Wt. lb/kg
				A	B*	D	G	H	J	L	M	N	T Core		
3/4	SF-12T	2-012T	2611 11614	3 3/8 85.7	2 1/2 63.5	59/64 23.4	7/16 11.1	1 11/32 34.1	1 9/32 32.5	1 3/4 44.5	2 11/32 59.5	1/2 12.7	2 50.8	3/8	1.6 .73
15/16 1	SF-15T SF-16T	2-015T 2-1T	2801 12459	3 3/4 95.3	2 3/4 69.9	1 1/32 26.2	17/32 13.5	1 1/2 38.1	1 7/16 36.5	1 15/16 49.2	2 23/32 69.1	9/16 14.3	2 3/8 60.3	7/16	2.3 1.04
1 1/8 1 3/16 1 1/4	SF-18T SF-19T SF-20RT	2-12T 2-13T 1-14T	4381 19487	4 1/4 108.0	3 1/4 82.6	1 11/64 29.8	17/32 13.5	1 5/8 41.3	1 9/16 39.7	2 3/16 55.6	3 7/32 81.8	5/8 15.9	2 7/8 73.0	7/16	3.8 1.72
1 1/4	SF-20T	2-14T	5782 25718	4 5/8 117.5	3 5/8 92.1	1 11/32 34.1	9/16 14.3	1 13/16 46.0	1 3/4 44.5	2 7/16 61.9	3 23/32 94.5	11/16 17.5	3 5/16 84.1	1/2	4.4 2.00
1 3/8 1 7/16	SF-22T SF-23T	2-16T 2-17T	5782 25718	4 5/8 117.5	3 5/8 92.1	1 11/32 34.1	9/16 14.3	1 13/16 46.0	1 3/4 44.5	2 9/16 65.1	3 23/32 94.5	11/16 17.5	3 5/16 84.1	1/2	4.4 2.00
1 1/2	SF-24T	2-18T	7340 32648	5 1/8 130.2	4 101.6	1 1/2 38.1	9/16 14.3	2 5/64 52.8	2 50.8	2 11/16 68.3	4 1/8 104.8	3/4 19.1	3 1/2 88.9	1/2	5.8 2.63
1 5/8	SF-26T	2-110T	7901 35144	5 3/8 136.5	4 1/8 104.8	1 9/16 39.7	9/16 14.3	2 7/64 53.6	2 50.8	2 13/16 71.4	4 21/64 109.9	3/4 19.1	3 7/8 98.4	9/16	6.0 2.72
1 11/16 1 3/4	SF-27T SF-28T	2-111T 2-112T	7901 35144	5 3/8 136.5	4 1/8 104.8	1 9/16 39.7	9/16 14.3	2 7/64 53.6	2 50.8	2 15/16 74.6	4 21/64 109.9	3/4 19.1	3 7/8 98.4	9/16	6.0 2.72
1 15/16 2	SF-31T SF-32RT	2-115T 1-2T	7889 35090	5 5/8 142.9	4 3/8 111.1	1 9/16 39.7	9/16 14.3	2 7/32 56.4	2 3/32 53.2	3 3/8 85.7	4 33/64 114.7	3/4 19.1	4 101.6	9/16	7.0 3.18
2	SF-32T	2-2T	9752 43377	6 3/8 161.9	5 1/8 130.2	1 3/4 44.5	13/16 20.6	2 3/8 60.3	2 1/4 57.2	3 1/2 88.9	5 3/16 131.8	7/8 22.2	4 1/4 108.0	5/8	11.1 5.03
2 1/8 2 3/16	SF-34T SF-35T	2-22T 2-23T	9752 43377	6 3/8 161.9	5 1/8 130.2	1 3/4 44.5	13/16 20.6	2 3/8 60.3	2 1/4 57.2	3 5/8 92.1	5 3/16 131.8	7/8 22.2	4 1/4 108.0	5/8	11.1 5.03
2 1/4	SF-36T	2-24T	11789 52437	6 7/8 174.6	5 5/8 142.9	1 15/16 49.2	13/16 20.6	2 3/4 69.9	2 5/8 66.7	4 1/16 103.2	5 7/16 138.1	1 25.4	5 127.0	5/8	13.0 5.90
2 3/8 2 7/16	SF-38T SF-39T	2-26T 2-27T	11789 52437	6 7/8 174.6	5 5/8 142.9	1 15/16 49.2	13/16 20.6	2 3/4 69.9	2 5/8 66.7	4 1/8 104.8	5 7/16 138.1	1 25.4	5 127.0	5/8	13.0 5.90

SF-T Series Standard Four Bolt Flange - SKWEZLOC Locking Collar - Metric -SKWEZ™

Bore Diameter mm	Part No.	Bearing Insert No.	Basic Dynamic Rating N/lb	Dimensions mm / inch										Bolt Size	Unit Wt. kg/lb
				A	B*	D	G	H	J	L	M	N	T Core		
20	SF-204TMC	5204TMC	11614 2611	85.7 3 3/8	63.5 2 1/2	23.4 59/64	11.1 7/16	34.1 1 11/32	32.5 1 9/32	44.5 1 3/4	59.5 2 11/32	12.7 1/2	50.8 2	M10	.73 1.6
25	SF-205TMC	5205TMC	12459 2801	95.3 3 3/4	69.9 2 3/4	26.2 1 1/32	13.5 17/32	38.1 1 1/2	36.5 1 7/16	49.2 1 15/16	69.1 2 23/32	14.3 9/16	60.3 2 3/8	M10	1.04 2.3
30	SF-206TMC	5206TMC	19487 4381	108.0 4 1/4	82.6 3 1/4	29.8 1 11/64	13.5 17/32	41.3 1 5/8	39.7 1 9/16	55.6 2 3/16	81.8 3 7/32	15.9 5/8	73.0 2 7/8	M12	1.72 3.8
35	SF-207TMC	5207TMC	25718 5782	117.5 4 5/8	92.1 3 5/8	34.1 1 11/32	14.3 9/16	46.0 1 13/16	44.5 1 3/4	65.1 2 9/16	94.5 3 23/32	17.5 11/16	3 5/16 84.1	M14	2.00 4.4
40	SF-208TMC	5208TMC	32648 7340	130.2 5 1/8	101.6 4	38.1 1 1/2	14.3 9/16	52.8 2 5/64	50.8 2	68.3 2 11/16	4 5/64 103.6	19.1 3/4	3 1/2 88.9	M14	2.63 5.8
45	SF-209TMC	5209TMC	35144 7901	136.5 5 3/8	104.8 4 1/8	39.7 1 9/16	14.3 9/16	53.6 2 7/64	50.8 2	74.6 2 15/16	109.9 4 21/64	19.1 3/4	98.4 3 7/8	M14	2.72 6.0
50	SF-210TMC	5210TMC	35090 7889	142.9 5 5/8	111.1 4 3/8	39.7 1 9/16	14.3 9/16	56.4 2 7/32	53.2 2 3/32	85.7 3 3/8	114.7 4 33/64	19.1 3/4	101.6 4	M16	3.18 7.0
55	SF-211TMC	5211TMC	43377 9752	161.9 6 3/8	130.2 5 1/8	44.5 1 3/4	20.6 13/16	60.3 2 3/8	57.2 2 1/4	92.1 3 5/8	131.8 5 3/16	22.2 7/8	108.0 4 1/4	M16	5.03 11.1
60	SF-212TMC	5212TMC	52437 11789	174.6 6 7/8	142.9 5 5/8	49.2 1 15/16	20.6 13/16	69.9 2 3/4	2 5/8 66.7	104.8 4 1/8	138.1 5 7/16	25.4 1	127.0 5	M16	5.90 13.0

For standard duty SKWEZLOC Locking Collar Bearing Inserts see page G-93. For Replacement Lock Collar see page G-98.
*To obtain bolt circle, multiply B x 1.414".

SEALMASTER® Performance Mounted Ball Bearings

Duty: Medium
Rolling Elements: Ball
Housing: Cast Iron Four Bolt Flange
Self Alignment: +/- 2 Degrees
Lock: Setscrew
Seal: Felt
Optional Seal: Contact
Temperature: -20° to 220°F

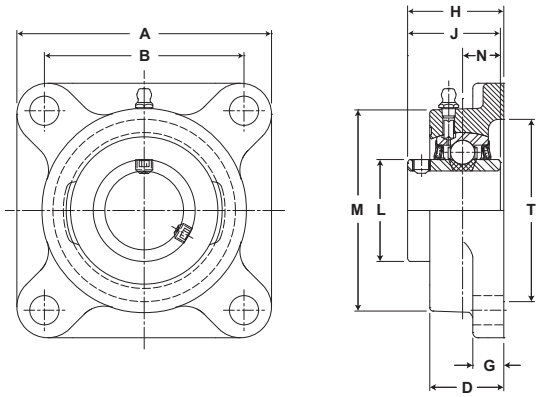

MSF Series Medium Duty Four-Bolt Flange Units - Setscrew Locking

Bore Diameter inch	Bore Diameter mm	Part No.	Bearing Insert No.	Basic Dynamic Rating lb/N	Dimensions inch / mm A	B*	D	G	H	J	N	L	M	T Core	Bolt Size	Unit Wt. lb/kg
15/16 1	25	MSF-15 MSF-16 MSF-305	3-015 3-1 5305	4381 19487	4 1/4 108.0	3 1/4 82.6	1 11/64 29.8	17/32 13.5	1 9/16 39.7	1 1/2 38.1	5/8 15.9	1 19/32 40.5	3 7/32 81.8	2 7/8 73.0	7/16	3.6 1.63
1 3/16 1 1/4	30	MSF-19 MSF-20 MSF-306	3-13 2-14 5306	5782 25718	4 5/8 117.5	3 5/8 92.1	1 11/32 34.1	9/16 14.3	1 3/4 44.5	1 11/16 42.9	11/16 17.5	1 55/64 47.2	3 23/32 94.5	3 5/16 84.1	1/2	4.1 1.86
1 7/16	35	MSF-23 MSF-307	3-17 5307	7340 32648	5 1/8 130.2	4 101.6	1 1/2 38.1	9/16 14.3	2 1/64 51.2	1 15/16 49.2	3/4 19.1	2 1/16 52.4	4 5/64 103.6	3 1/2 88.9	1/2	5.5 2.49
1 1/2	40	MSF-24 MSF-308	3-18 5308	7901 35144	5 3/8 136.5	4 1/8 104.8	1 9/16 39.7	9/16 14.3	2 3/64 52.0	1 15/16 49.2	3/4 19.1	2 19/64 58.3	4 21/64 109.9	3 7/8 98.4	9/16	6.0 2.72
1 11/16 1 3/4	45	MSF-27 MSF-28 MSF-309	3-111 3-112 5309	7889 35090	5 5/8 142.9	4 3/8 111.1	1 9/16 39.7	9/16 14.3	2 5/32 54.8	2 1/32 51.6	3/4 19.1	2 15/32 62.7	4 33/64 114.7	4 101.6	9/16	6.8 3.08
1 15/16 2	50	MSF-31 MSF-32 MSF-310	3-115 2-2 5310	9752 43377	6 3/8 161.9	5 1/8 130.2	1 3/4 44.5	13/16 20.6	2 5/16 58.7	2 3/16 55.6	7/8 22.2	2 23/32 69.1	5 3/16 131.8	4 1/4 108.0	5/8	10.5 4.76
2 3/16 2 1/4	55	MSF-35 MSF-36 MSF-311	3-23 2-24 5311	11789 52437	6 7/8 174.6	5 5/8 142.9	1 15/16 49.2	13/16 20.6	2 11/16 68.3	2 9/16 65.1	1 25.4	2 63/64 75.8	5 7/16 138.1	5 127.0	5/8	12.1 5.49
2 7/16 2 1/2	65	MSF-39 MSF-40 MSF-313	3-27 3-28 5313	13971 62143	7 3/8 187.3	5 7/8 149.2	2 5/16 58.7	11/16 17.5	3 76.2	2 3/4 69.9	1 1/16 27.0	3 7/16 87.3	6 1/8 155.6	5 10/77 130.3	5/8	16.4 7.44
2 11/16	70	MSF-43 MSF-314	3-211 5314	14839 66004	7 3/4 196.9	6 152.4	2 3/8 60.3	1 25.4	3 3/16 81.0	3 1/16 77.8	1 5/16 33.3	3 41/64 92.5	6 1/2 165.1	5 22/25 149.4	3/4	20.6 9.34
2 15/16 3	75	MSF-47 MSF-48 MSF-315	3-215 3-3 5315	17412 77449	7 3/4 196.9	6 152.4	2 11/16 68.3	7/8 22.2	3 1/2 88.9	3 1/4 82.6	1 5/16 33.3	3 59/64 99.6	6 3/4 171.5	5 14/25 141.2	3/4	21.4 9.71
3 3/16 3 1/4	80	MSF-51 MSF-52 MSF-316	3-33 2-34 5316	18681 83093	8 7/16 214.3	6 3/4 171.5	2 3/4 69.9	1 25.4	3 17/32 89.7	3 3/8 85.7	1 11/32 34.1	4 5/32 105.6	7 1/4 184.2	6 152.4	3/4	26.7 12.11
3 7/16 3 1/2		MSF-55 MSF-56	3-37 3-38	21566 95926	8 7/16 214.3	6 3/4 171.5	3 76.2	1 25.4	3 31/32 100.8	3 25/32 96.0	1 9/16 39.7	4 25/64 111.5	7 3/4 196.9	6 22/71 160.3	7/8	30.0 13.61
3 15/16 4	100	MSF-63 MSF-64 MSF-320	3-315 3-4 5320	29905 133017	10 9/16 268.3	8 5/16 211.1	3 13/16 96.8	1 1/4 31.8	5 127.0	4 5/8 117.5	1 15/16 49.2	5 11/64 131.4	9 1/4 235.0	7 11/25 189.0	1	55.1 24.99
4 7/16 4 15/16		MSFD-71 MSFD-79	3-47D 3-415D	37482 166720	12 3/4 323.9	10 254.0	4 3/4 120.7	1 9/16 39.7	6 152.4	5 3/4 146.1	2 7/8 73.0	6 11/32 161.1	11 1/2 292.1	9 1/2 241.3	1 1/4 32	115.0 52.16

Units MSFD-71 and MSFD-79 are equipped with four set screws: two on each end of inner race extensions.
Units MSFD-71 and MSFD-79 are not available with contact seal.
*To obtain bolt circle, multiply B x 1.414".
For Medium Duty Bearing Inserts-Single Lock see page G-95.
For Medium Duty Bearing Inserts-Double Lock see page G-97.

Metric dimensions for reference only.
Not all parts are available from stock. Please contact customer service for availability (800) 626-2120.
For more information on bearing capabilities outside of our standard offering, please contact Application Engineering (800) 626-2093.

Performance Mounted Ball Bearings

SEALMASTER®

Duty: Medium
Rolling Elements: Ball
Housing: Cast Iron Four Bolt Flange
Self Alignment: +/- 2 Degrees
Lock: SKWEZLOC Locking Collar
Seal: Felt
Optional Seal: Contact
Temperature: -20° to 220°F

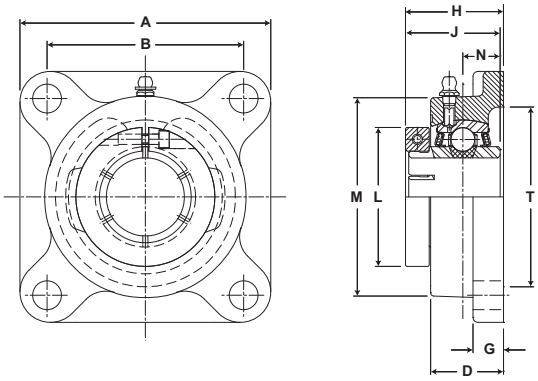

MSF-T Series Medium Duty Four-Bolt Flange Units - SKWEZLOC Locking Collar

Bore Diameter inch	Part No.	Bearing Insert No.	Basic Dynamic Rating lb/N	Dimensions inch / mm A	B*	D	G	H	J	N	L	M	T Core	Bolt Size	Unit Wt. lb/kg
1	MSF-16T	3-1T	4381 19487	4 1/4 108.0	3 1/4 82.6	1 11/64 29.8	17/32 13.5	1 5/8 41.3	1 9/16 39.7	5/8 15.9	2 1/16 52.4	3 7/32 81.8	2 7/8 73.0	7/16	3.8 1.72
1 3/16 1 1/4	MSF-19T MSF-20T	3-13T 2-14T	5782 25718	4 5/8 117.5	3 5/8 92.1	1 11/32 34.1	9/16 14.3	1 13/16 46.0	1 3/4 44.5	11/16 17.5	2 7/16 61.9	3 23/32 94.5	3 5/16 84.1	1/2	4.4 2.00
1 7/16	MSF-23T	3-17T	7340 32648	5 1/8 130.2	4 101.6	1 1/2 38.1	9/16 14.3	2 5/64 52.8	2 50.8	3/4 19.1	2 11/16 68.3	4 1/8 104.8	3 1/2 88.9	1/2	5.8 2.63
1 1/2	MSF-24T	3-18T	7901 35144	5 3/8 136.5	4 1/8 104.8	1 9/16 39.7	9/16 14.3	2 7/64 53.6	2 50.8	3/4 19.1	2 13/16 71.4	4 21/64 109.9	3 7/8 98.4	9/16	6.3 2.86
1 11/16 1 3/4	MSF-27T MSF-28T	3-111T 3-112T	7889 35090	5 5/8 142.9	4 3/8 111.1	1 9/16 39.7	9/16 14.3	2 7/32 56.4	2 3/32 53.2	3/4 19.1	3 1/4 82.6	4 33/64 114.7	4 101.6	9/16	7.4 3.36
1 15/16 2	MSF-31T MSF-32T	3-115T 2-2T	9752 43377	6 3/8 161.9	5 1/8 130.2	1 3/4 44.5	13/16 20.6	2 3/8 60.3	2 1/4 57.2	7/8 22.2	3 1/2 88.9	5 3/16 131.8	4 1/4 108.0	5/8	11.1 5.03
2 3/16 2 1/4	MSF-35T MSF-36T	3-23T 2-24T	11789 52437	6 7/8 174.6	5 5/8 142.9	1 15/16 49.2	13/16 20.6	2 3/4 69.9	2 5/8 66.7	1 25.4	4 1/16 103.2	5 7/16 138.1	5 127.0	5/8	13.3 6.03

For Medium Duty SKWEZLOC Locking Collar Bearing Inserts see page G-96. For Replacement Lock Collar see page G-98.
*To obtain bolt circle, multiply B x 1.414".

SEALMASTER® Performance Mounted Ball Bearings

Duty: Standard
Rolling Elements: Ball
Housing: Cast Iron Two Bolt Flange
Self Alignment: +/- 2 Degrees
Lock: Setscrew
Seal: Felt
Optional Seal: Contact
Temperature: -20° to 220°F

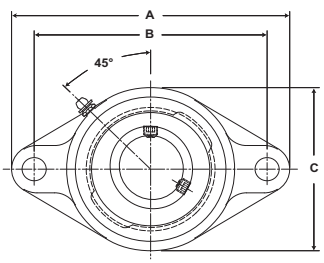

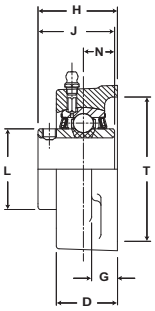

SFT Series Standard Duty Two-Bolt Flange Units - Setscrew Locking

Bore Diameter inch	Bore Diameter mm	Part No.	Bearing Insert No.	Basic Dynamic Rating lb/N	Dimensions inch / mm A	B	C	D	G	H	J	N	L	T Core	Bolt Size	Unit Wt. lb/kg
1/2		SFT-8	2-08													
9/16		SFT-9	2-09	2611	3 7/8	3	2 5/16	59/64	7/16	1 9/32	1 7/32	1/2	1 3/16	2	3/8	1.2
5/8		SFT-10	2-010	11614	98.4	76.2	58.7	23.4	11.1	32.5	31.0	12.7	30.2	50.8		.54
11/16		SFT-11	2-011													
3/4		SFT-12	2-012	2611	4 13/32	3 17/32	2 3/8	59/64	7/16	1 9/32	1 7/32	1/2	1 3/16	2	3/8	1.2
	20	SFT-204	5204	11614	111.9	89.7	60.3	23.4	11.1	32.5	31.0	12.7	30.2	50.8		.54
13/16		SFT-13	2-013													
7/8		SFT-14	2-014													
15/16		SFT-15	2-015	2801	4 7/8	3 57/64	2 3/4	1 1/32	17/32	1 7/16	1 3/8	9/16	1 3/8	2 3/8	7/16	1.6
1		SFT-16	2-1	12459	123.8	98.8	69.9	26.2	13.5	36.5	34.9	14.3	34.9	60.3		.73
	25	SFT-205	5205													
1 1/16		SFT-17	2-11													
1 1/8		SFT-18	2-12													
1 3/16		SFT-19	2-13	4381	5 9/16	4 19/32	3 1/4	1 11/64	17/32	1 9/16	1 1/2	5/8	1 19/32	2 7/8	7/16	2.2
1 1/4		SFT-20R	1-14	19487	141.3	116.7	82.6	29.8	13.5	39.7	38.1	15.9	40.5	73.0		1.00
	30	SFT-206	5206													
1 1/4		SFT-20	2-14													
1 5/16		SFT-21	2-15													
1 3/8		SFT-22	2-16	5782	6 1/8	5 1/8	3 3/4	1 11/32	9/16	1 3/4	1 11/16	11/16	1 55/64	3 5/16	1/2	3.2
1 7/16		SFT-23	2-17	25718	155.6	130.2	95.3	34.1	14.3	44.5	42.9	17.5	47.2	84.1		1.45
	35	SFT-207	5207													
1 1/2		SFT-24	2-18													
1 9/16		SFT-25	2-19	7340	6 3/4	5 21/32	4 1/8	1 1/2	9/16	2 1/64	1 15/16	3/4	2 1/16	3 1/2	1/2	4.5
	40	SFT-208	5208	32648	171.5	143.7	104.8	38.1	14.3	51.2	49.2	19.1	52.4	88.9		2.04
1 5/8		SFT-26	2-110													
1 11/16		SFT-27	2-111	7901	7 1/16	5 27/32	4 3/8	1 9/16	9/16	2 3/64	1 15/16	3/4	2 19/64	3 7/8	9/16	5
1 3/4		SFT-28	2-112	35144	179.4	148.4	111.1	39.7	14.3	52.0	49.2	19.1	58.3	98.4		2.27
	45	SFT-209	5209													
1 13/16		SFT-29	2-113													
1 7/8		SFT-30	2-114													
1 15/16		SFT-31	2-115	7889	7 7/16	6 3/16	4 9/16	1 9/16	9/16	2 5/32	2 1/32	3/4	2 15/32	4	9/16	5.4
2		SFT-32R	1-2	35090	188.9	157.2	115.9	39.7	14.3	54.8	51.6	19.1	62.7	101.6		2.45
	50	SFT-210	5210													
2		SFT-32	2-2													
2 1/8		SFT-34	2-22	9752	8 1/2	7 1/4	5 1/4	1 3/4	13/16	2 5/16	2 3/16	7/8	2 23/32	4 1/4	5/8	8.4
2 3/16		SFT-35	2-23	43377	215.9	184.2	133.4	44.5	20.6	58.7	55.6	22.2	69.1	108.0		3.81
	55	SFT-211	5211													

For Standard Duty Bearing Inserts-Single Lock see page G-92.

Metric dimensions for reference only.
Not all parts are available from stock. Please contact customer service for availability (800) 626-2120.
For more information on bearing capabilities outside of our standard offering, please contact Application Engineering (800) 626-2093.

Performance Mounted Ball Bearings

SEALMASTER®

Duty: Standard
Rolling Elements: Ball
Housing: Cast Iron Two Bolt Flange
Self Alignment: +/- 2 Degrees
Lock: SKWEZLOC Locking Collar
Seal: Felt
Optional Seal: Contact
Temperature: -20° to 220°F

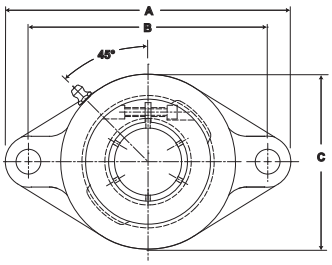

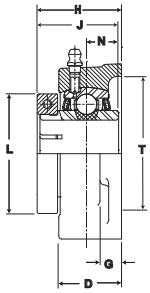

SFT-T Series Standard Duty Two Bolt Flange - SKWEZLOC Locking Collar - Inch

Bore Diameter inch	Part No.	Bearing Insert No.	Basic Dynamic Rating lb/N	Dimensions inch / mm A	B	C	D	G	H	J	L	N	T Core	Bolt Size	Unit Wt. lb/kg
3/4	SFT-12T	2-012T	2611 11614	4 13/32 111.9	3 17/32 89.7	2 3/8 60.3	59/64 23.4	7/16 11.1	1 11/32 34.1	1 9/32 32.5	1 3/4 44.5	1/2 12.7	2 50.8	3/8	1.3 .59
15/16 1	SFT-15T SFT-16T	2-015T 2-1T	2801 12459	4 7/8 123.8	3 57/64 98.8	2 3/4 69.9	1 1/32 26.2	17/32 13.5	1 1/2 38.1	1 7/16 36.5	1 15/16 49.2	9/16 14.3	2 3/8 60.3	7/16	1.8 .82
1 1/8 1 3/16 1 1/4	SFT-18T SFT-19T SFT-20RT	2-12T 2-13T 1-14T	4381 19487	5 9/16 141.3	4 19/32 116.7	3 1/4 82.6	1 11/64 29.8	17/32 13.5	1 5/8 41.3	1 9/16 39.7	2 3/16 55.6	5/8 15.9	2 7/8 73.0	7/16	2.4 1.09
1 1/4	SFT-20T	2-14T	5782 25718	6 1/8 155.6	5 1/8 130.2	3 3/4 95.3	1 11/32 34.1	9/16 14.3	1 13/16 46.0	1 3/4 44.5	2 7/16 61.9	11/16 17.5	3 5/16 84.1	1/2	3.5 1.59
1 3/8 1 7/16	SFT-22T SFT-23T	2-16T 2-17T	5782 25718	6 1/8 155.6	5 1/8 130.2	3 3/4 95.3	1 11/32 34.1	9/16 14.3	1 13/16 46.0	1 3/4 44.5	2 9/16 65.1	11/16 17.5	3 5/16 84.1	1/2	3.5 1.59
1 1/2	SFT-24T	2-18T	7340 32648	6 3/4 171.5	5 21/32 143.7	4 1/8 104.8	1 1/2 38.1	9/16 14.3	2 5/64 52.8	2 50.8	2 11/16 68.3	3/4 19.1	3 1/2 88.9	1/2	4.8 2.18
1 5/8	SFT-26T	2-110T	7901 35144	7 1/16 179.4	5 27/32 148.4	4 3/8 111.1	1 9/16 39.7	9/16 14.3	2 7/64 53.6	2 50.8	2 13/16 71.4	3/4 19.1	3 7/8 98.4	9/16	5.3 2.40
1 11/16 1 3/4	SFT-27T SFT-28T	2-111T 2-112T	7901 35144	7 1/16 179.4	5 27/32 148.4	4 3/8 111.1	1 9/16 39.7	9/16 14.3	2 7/64 53.6	2 50.8	2 15/16 74.6	3/4 19.1	3 7/8 98.4	9/16	5.3 2.40
1 15/16 2	SFT-31T SFT-32RT	2-115T 1-2T	7889 35090	7 7/16 188.9	6 3/16 157.2	4 9/16 115.9	1 9/16 39.7	9/16 14.3	2 7/32 56.4	2 3/32 53.2	3 3/8 85.7	3/4 19.1	4 101.6	9/16	6 2.72
2	SFT-32T	2-2T	9752 43377	8 1/2 215.9	7 1/4 184.2	5 1/4 133.4	1 3/4 44.5	13/16 20.6	2 3/8 60.3	2 1/4 57.2	3 1/2 88.9	7/8 22.2	4 1/4 108.0	5/8	9 4.08
2 1/8 2 3/16	SFT-34T SFT-35T	2-22T 2-23T	9752 43377	8 1/2 215.9	7 1/4 184.2	5 1/4 133.4	1 3/4 44.5	13/16 20.6	2 3/8 60.3	2 1/4 57.2	3 5/8 92.1	7/8 22.2	4 1/4 108.0	5/8	9 4.08

SFT-T Series Standard Two Bolt Flange - SKWEZLOC Locking Collar - Metric -SKWEZ™

Bore Diameter mm	Part No.	Bearing Insert No.	Basic Dynamic Rating N/lb	Dimensions mm / inch A	B	C	D	G	H	J	L	N	T Core	Bolt Size	Unit Wt. kg/lb
20	SFT-204TMC	5204TMC	11614 2611	111.9 4 13/32	89.7 3 17/32	60.3 2 3/8	23.4 59/64	11.1 7/16	34.1 1 11/32	32.5 1 9/32	44.5 1 3/4	12.7 1/2	50.8 2	M10	.59 1.3
25	SFT-205TMC	5205TMC	12459 2801	123.8 4 7/8	98.8 3 57/64	69.9 2 3/4	26.2 1 1/32	13.5 17/32	38.1 1 1/2	36.5 1 7/16	49.2 1 15/16	14.3 9/16	60.3 2 3/8	M10	.82 1.8
30	SFT-206TMC	5206TMC	19487 4381	141.3 5 9/16	116.7 4 19/32	82.6 3 1/4	29.8 1 11/64	13.5 17/32	41.3 1 5/8	39.7 1 9/16	55.6 2 3/16	15.9 5/8	73.0 2 7/8	M12	1.09 2.4
35	SFT-207TMC	5207TMC	25718 5782	155.6 6 1/8	130.2 5 1/8	95.3 3 3/4	34.1 1 11/32	14.3 9/16	46.0 1 13/16	44.5 1 3/4	65.1 2 9/16	17.5 11/16	84.1 3 5/16	M14	1.59 3.5
40	SFT-208TMC	5208TMC	32648 7340	171.5 6 3/4	143.7 5 21/32	104.8 4 1/8	38.1 1 1/2	14.3 9/16	52.8 2 5/64	50.8 2	68.3 2 11/16	19.1 3/4	88.9 3 1/2	M14	2.18 4.8
45	SFT-209TMC	5209TMC	35144 7901	179.4 7 1/16	148.4 5 27/32	111.1 4 3/8	39.7 1 9/16	14.3 9/16	53.6 2 7/64	50.8 2	74.6 2 15/16	19.1 3/4	98.4 3 7/8	M14	2.40 5.3
50	SFT-210TMC	5210TMC	35090 7889	188.9 7 7/16	157.2 6 3/16	115.9 4 9/16	39.7 1 9/16	14.3 9/16	56.4 2 7/32	53.2 2 3/32	85.7 3 3/8	19.1 3/4	101.6 4	M16	2.72 6
55	SFT-211TMC	5211TMC	43377 9752	215.9 8 1/2	184.2 7 1/4	133.4 5 1/4	44.5 1 3/4	20.6 13/16	60.3 2 3/8	57.2 2 1/4	92.1 3 5/8	22.2 7/8	108.0 4 1/4	M16	4.08 9

For Medium Duty SKWEZLOC Locking Collar Bearing Inserts see page G-93. For Replacement Lock Collar see page G-98.

SEALMASTER® Performance Mounted Ball Bearings

Duty: Medium
Rolling Elements: Ball
Housing: Cast Iron Two Bolt Flange
Self Alignment: +/- 2 Degrees
Lock: Setscrew
Seal: Felt
Optional Seal: Contact
Temperature: -20° to 220°F

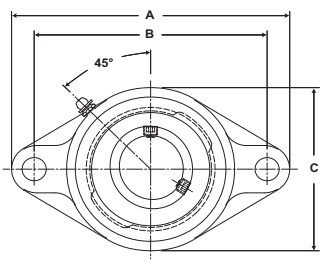

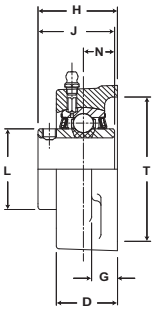

MSFT Series Medium Duty Two-Bolt Flange Units - Setscrew Locking

Bore Diameter inch	Bore Diameter mm	Part No.	Bearing Insert No.	Basic Dynamic Rating lb/N	Dimensions inch / mm A	B	C	D	G	H	J	N	L	T Core	Bolt Size	Unit Wt. lb/kg
15/16		MSFT-15	3-015	4381	5 9/16	4 19/32	3 1/4	1 11/64	17/32	1 9/16	1 1/2	5/8	1 19/32	2 7/8	7/16	2.4
1		MSFT-16	3-1	19487	141.3	116.7	82.6	29.8	13.5	39.7	38.1	15.9	40.5	73.0		1.09
	25	MSFT-305	5305													
1 3/16		MSFT-19	3-13	5782	6 1/8	5 1/8	3 3/4	1 11/32	9/16	1 3/4	1 11/16	11/16	1 55/64	3 5/16	1/2	3.4
1 1/4		MSFT-20	2-14	25718	155.6	130.2	95.3	34.1	14.3	44.5	42.9	17.5	47.2	84.1		1.54
	30	MSFT-306	5306													
1 7/16		MSFT-23	3-17	7340	6 3/4	5 21/32	4 1/8	1 1/2	9/16	2 1/64	1 15/16	3/4	2 1/16	3 1/2	1/2	4.6
		MSFT-307	5307	32648	171.5	143.7	104.8	38.1	14.3	51.2	49.2	19.1	52.4	88.9		2.09
1 1/2		MSFT-24	3-18	7901	7 1/16	5 27/32	4 3/8	1 9/16	9/16	2 3/64	1 15/16	3/4	2 19/64	3 7/8	9/16	5.2
		MSFT-308	5308	35144	179.4	148.4	111.1	39.7	14.3	52.0	49.2	19.1	58.3	98.4		2.36
1 11/16		MSFT-27	3-111	7889	7 7/16	6 3/16	4 9/16	1 9/16	9/16	2 5/32	2 1/32	3/4	2 15/32	4	9/16	5.6
1 3/4		MSFT-28	3-112	35090	188.9	157.2	115.9	39.7	14.3	54.8	51.6	19.1	62.7	101.6		2.54
	45	MSFT-309	5309													
1 15/16		MSFT-31	3-115	9752	8 1/2	7 1/4	5 1/4	1 3/4	13/16	2 5/16	2 3/16	7/8	2 23/32	4 1/4	5/8	8.6
2		MSFT-32	2-2	43377	215.9	184.2	133.4	44.5	20.6	58.7	55.6	22.2	69.1	108.0		3.90
	50	MSFT-310	5310													

For Medium Duty Bearing Inserts-Single Lock see page G-95.

Metric dimensions for reference only.
Not all parts are available from stock. Please contact customer service for availability (800) 626-2120.
For more information on bearing capabilities outside of our standard offering, please contact Application Engineering (800) 626-2093.

Performance Mounted Ball Bearings

SEALMASTER®

Duty: Medium
Rolling Elements: Ball
Housing: Cast Iron Two Bolt Flange
Self Alignment: +/- 2 Degrees
Lock: SKWEZLOC Locking Collar
Seal: Felt
Optional Seal: Contact
Temperature: -20° to 220°F

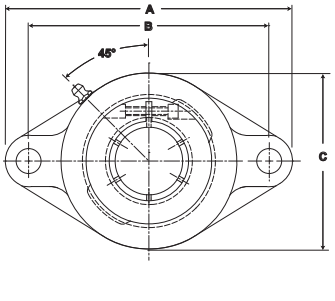

MSFT-T Series Medium Duty Two-Bolt Flange Units - SKWEZLOC Locking Collar

Bore Diameter inch	Part No.	Bearing Insert No.	Basic Dynamic Rating lb/N	Dimensions inch / mm										Bolt Size	Unit Wt. lb/kg
				A	B	C	D	G	H	J	N	L	T Core		
1	MSFT-16T	3-1T	4381	5 9/16	4 19/32	3 1/4	1 11/64	17/32	1 5/8	1 9/16	5/8	2 1/16	2 7/8	7/16	2.6
			19487	141.3	116.7	82.6	29.8	13.5	41.3	39.7	15.9	52.4	73.0		1.18
1 3/16	MSFT-19T	3-13T	5782	6 1/8	5 1/8	3 3/4	1 11/32	9/16	1 13/16	1 3/4	11/16	2 7/16	3 5/16	1/2	3.7
1 1/4	MSFT-20T	2-14T	25718	155.6	130.2	95.3	34.1	14.3	46.0	44.5	17.5	61.9	84.1		1.68
1 7/16	MSFT-23T	3-17T	7340	6 3/4	5 21/32	4 1/8	1 1/2	9/16	2 5/64	2	3/4	2 11/16	3 1/2	1/2	4.9
			32648	171.5	143.7	104.8	38.1	14.3	52.8	50.8	19.1	68.3	88.9		2.22
1 1/2	MSFT-24T	3-18T	7901	7 1/16	5 27/32	4 3/8	1 9/16	9/16	2 7/64	2	3/4	2 13/16	3 7/8	9/16	5.5
			35144	179.4	148.4	111.1	39.7	14.3	53.6	50.8	19.1	71.4	98.4		2.49
1 11/16	MSFT-27T	3-111T	7889	7 7/16	6 3/16	4 9/16	1 9/16	9/16	2 7/32	2 3/32	3/4	3 1/4	4	9/16	6.2
1 3/4	MSFT-28T	3-112T	35090	188.9	157.2	115.9	39.7	14.3	56.4	53.2	19.1	82.6	101.6		2.81
1 15/16	MSFT-31T	3-115T	9752	8 1/2	7 1/4	5 1/4	1 3/4	13/16	2 3/8	2 1/4	7/8	3 1/2	4 1/4	5/8	9.2
2	MSFT-32T	2-2T	43377	215.9	184.2	133.4	44.5	20.6	60.3	57.2	22.2	88.9	108.0		4.17

For Medium Duty SKWEZLOC Locking Collar Bearing Inserts see page G-96. For Replacement Lock Collar see page G-98.

SEALMASTER® Performance Mounted Ball Bearings

Duty: Standard
Rolling Elements: Ball
Housing: Cast Iron Flange Bracket
Self Alignment: +/- 2 Degrees
Lock: Setscrew
Seal: Felt
Optional Seal: Contact
Temperature: -20° to 220°F

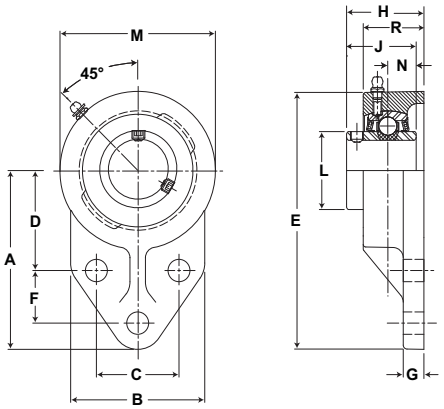

FB Series Standard Duty Three Bolt Single Lock Flange Brackets - Setscrew Locking

Bore Diameter inch	Bore Diameter mm	Part No.	Bearing Insert No.	Basic Dynamic Rating lb/N	Dimensions inch / mm A	B	C	D	E	F	G	H	J	L	M	N	R	Bolt Size	Unit Wt. lb/kg
1/2		FB-8	2-08	2611 11614	3 76.2	2 3/8 60.3	1 1/2 38.1	1 11/16 42.9	4 3/16 106.4	7/8 22.2	5/16 7.9	1 11/32 34.1	1 7/32 31.0	1 3/16 30.2	2 3/8 60.3	1/2 12.7	1 25.4	3/8	1.3 0.59
9/16		FB-9	2-09																
5/8		FB-10	2-010																
11/16		FB-11	2-011																
3/4		FB-12	2-012																
	20	FB-204	5204																
13/16		FB-13	2-013	2801 12459	3 3/8 85.7	2 1/2 63.5	1 5/8 41.3	1 13/16 46.0	4 3/4 120.7	1 1/8 28.6	3/8 9.5	1 1/2 38.1	1 3/8 34.9	1 3/8 34.9	2 3/4 69.9	9/16 14.3	1 3/32 27.8	3/8	2.1 0.95
7/8		FB-14	2-014																
15/16		FB-15	2-015																
1		FB-16	2-1																
	25	FB-205	5205																
1 1/16		FB-17	2-11	4381 19487	3 3/4 95.3	2 3/4 69.9	1 7/8 47.6	2 1/16 52.4	5 23/64 136.1	1 1/4 31.8	3/8 9.5	1 5/8 41.3	1 1/2 38.1	1 19/32 40.5	3 7/32 81.8	5/8 15.9	1 15/64 31.4	3/8	3.0 1.36
1 1/8		FB-18	2-12																
1 3/16		FB-19	2-13																
1 1/4		FB-20R	1-14																
	30	FB-206	5206																
1 1/4		FB-20	2-14	5782 25718	4 1/4 108.0	3 1/4 82.6	2 50.8	2 3/8 60.3	6 1/8 155.6	1 1/4 31.8	1/2 12.7	1 7/8 47.6	1 11/16 42.9	1 55/64 47.2	3 3/4 95.3	11/16 17.5	1 15/32 37.3	1/2	3.1 1.41
1 5/16		FB-21	2-15																
1 3/8		FB-22	2-16																
1 7/16		FB-23	2-17																
	35	FB-207	5207																
1 7/8		FB-30	2-114	7889 35090	5 3/16 131.8	4 101.6	2 3/4 69.9	2 15/16 74.6	7 15/32 189.7	1 5/8 41.3	1/2 12.7	2 5/32 54.8	2 1/32 51.6	2 15/32 62.7	4 9/16 115.9	3/4 19.1	1 35/64 39.3	1/2	5.1 2.31
1 15/16		FB-31	2-115																
2		FB-32R	1-2																
	50	FB-210	5210																

For Standard Duty Bearing Inserts-Single Lock see page G-92.

Metric dimensions for reference only.
Not all parts are available from stock. Please contact customer service for availability (800) 626-2120.
For more information on bearing capabilities outside of our standard offering, please contact Application Engineering (800) 626-2093.

Performance Mounted Ball Bearings

SEALMASTER®

Duty: Standard
Rolling Elements: Ball
Housing: Cast Iron Flange Bracket
Self Alignment: +/- 2 Degrees
Lock: SKWEZLOC Locking Collar
Seal: Felt
Optional Seal: Contact
Temperature: -20° to 220°F

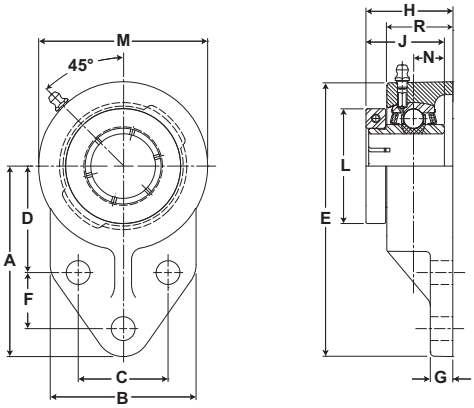

FB-T Series Standard Duty Flange Bracket - SKWEZLOC Locking Collar - Inch

Bore Diameter inch	Part No.	Bearing Insert No.	Basic Dynamic Rating lb/N	Dimensions inch / mm													Bolt Size	Unit Wt. lb/kg
				A	B	C	D	E	F	G	H	J	L	M	N	R		
3/4	FB-12T	2-012T	2611 11614	3 76.2	2 3/8 60.3	1 1/2 38.1	1 11/16 42.9	4 3/16 106.4	7/8 22.2	5/16 7.9	1 13/32 35.7	1 9/32 32.5	1 3/4 44.5	2 3/8 60.3	1/2 12.7	1 25.4	3/8	1.4 0.64
15/16 1	FB-15T FB-16T	2-015T 2-1T	2801 12459	3 3/8 85.7	2 1/2 63.5	1 5/8 41.3	1 13/16 46.0	4 3/4 120.7	1 1/8 28.6	3/8 9.5	1 9/16 39.7	1 7/16 36.5	1 15/16 49.2	2 3/4 69.9	9/16 14.3	1 1/8 27.8	3/8	2.3 1.04
1 1/8 1 3/16 1 1/4	FB-18T FB-19T FB-20RT	2-12T 2-13T 1-14T	4381 19487	3 3/4 95.3	2 3/4 69.9	1 7/8 47.6	2 1/16 52.4	5 23/64 136.1	1 1/4 31.8	3/8 9.5	1 11/16 42.9	1 9/16 39.7	2 3/16 55.6	3 7/32 81.8	5/8 15.9	1 1/4 31.8	3/8	3.2 1.45
1 1/4	FB-20T	2-14T	5782 25718	4 1/4 108.0	3 1/4 82.6	2 50.8	2 3/8 60.3	6 1/8 155.6	1 1/4 31.8	1/2 12.7	1 15/16 49.2	1 3/4 44.5	2 7/16 61.9	3 3/4 95.3	11/16 17.5	1 7/16 36.5	1/2	3.4 1.54
1 3/8 1 7/16	FB-22T FB-23T	2-16T 2-17T	5782 25718	4 1/4 108.0	3 1/4 82.6	2 50.8	2 3/8 60.3	6 1/8 155.6	1 1/4 31.8	1/2 12.7	1 15/16 49.2	1 3/4 44.5	2 9/16 65.1	3 3/4 95.3	11/16 17.5	1 1/2 37.3	1/2	3.4 1.54
1 15/16 2	FB-31T FB-32RT	2-115T 1-2T	7889 35090	5 3/16 131.8	4 101.6	2 3/4 69.9	2 15/16 74.6	7 15/32 189.7	1 5/8 41.3	1/2 12.7	2 7/32 56.4	2 3/32 53.2	3 3/8 85.7	4 9/16 115.9	3/4 19.1	1 35/64 39.3	1/2	5.7 2.59

FB-T Series Standard Flange Bracket - SKWEZLOC Locking Collar - Metric -SKWEZ™

Bore Diameter mm	Part No.	Bearing Insert No.	Basic Dynamic Rating N/lb	Dimensions mm / inch													Bolt Size	Unit Wt. kg/lb
				A	B	C	D	E	F	G	H	J	L	M	N	R		
20	FB-204TMC	5204TMC	11614 2611	76.2 3	60.3 2 3/8	32.1 1 17/64	42.1 1 21/32	106.4 4 3/16	27.0 1 1/16	7.9 5/16	35.7 1 13/32	32.5 1 9/32	44.5 1 3/4	60.3 2 3/8	12.7 1/2	25.4 1	M8	.64 1.4
25	FB-205TMC	5205TMC	12459 2801	85.7 3 3/8	63.5 2 1/2	34.1 1 11/32	44.8 1 49/64	120.7 4 3/4	27.0 1 1/16	9.5 3/8	39.7 1 9/16	36.5 1 7/16	49.2 1 15/16	69.9 2 3/4	14.3 9/16	27.8 1 1/8	M8	1.04 2.3
30	FB-206TMC	5206TMC	19487 4381	95.3 3 3/4	69.9 2 3/4	40.1 1 37/64	50 1 31/32	136.1 5 23/64	29.0 1 9/64	9.5 3/8	42.9 1 11/16	39.7 1 9/16	55.6 2 3/16	81.8 3 7/32	15.9 5/8	31.8 1 1/4	M8	1.45 3.2
35	FB-207TMC	5207TMC	25718 5782	108.0 4 1/4	82.6 3 1/4	46.0 1 13/16	55.2 2 11/64	155.6 6 1/8	32.1 1 17/64	12.7 1/2	49.2 1 15/16	44.5 1 3/4	65.1 2 9/16	95.3 3 3/4	17.5 11/16	37.3 1 1/2	M8	1.54 3.4
50	FB-210TMC	5210TMC	35090 7889	131.8 5 3/16	101.6 4	57.9 2 9/32	67.9 2 43/64	189.7 7 15/32	46.0 1 13/16	12.7 1/2	56.4 2 7/32	53.2 2 3/32	85.7 3 3/8	115.9 4 9/16	19.1 3/4	39.3 1 35/64	M10	2.59 5.7

For Medium Duty SKWEZLOC Locking Collar Bearing Inserts see page G-93. For Replacement Lock Collar see page G-98.

SEALMASTER® Performance Mounted Ball Bearings

Duty: Standard

Rolling Elements: Ball

Housing: Cast Iron Piloted Flange Cartridge

Self Alignment: +/- 2 Degrees

Lock: Setscrew

Seal: Felt

Optional Seal: Contact

Temperature: -20° to 220°F

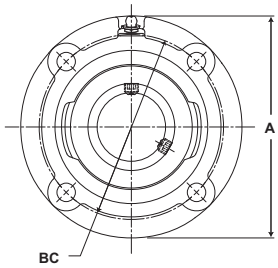

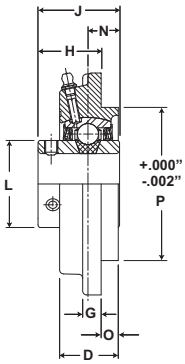

SFC Series Standard Duty Flange Cartridge Units - Setscrew Locking

Bore Diameter inch	Bore Diameter mm	Part No.	Bearing Insert No.	Basic Dynamic Rating lb/N	Dimensions inch / mm A	BC	D	G	H	J	L	N	O	P*	Bolt Size	Unit Wt. lb/kg
1 1/8		SFC-18	2-12													
1 3/16		SFC-19	2-13	4381	4 3/8	3 5/8	1 11/64	3/8	1 5/16	1 9/16	1 19/32	5/8	1/4	3.000	5/16	3.0
1 1/4		SFC-20R	1-14	19487	111.1	92.1	29.8	9.5	33.3	39.7	40.5	15.9	6.4	76.20		1.36
	30	SFC-206	5206													
1 1/4		SFC-20	2-14													
1 5/16		SFC-21	2-15													
1 3/8		SFC-22	2-16	5782	5	4 1/8	1 9/32	3/8	1 5/16	1 11/16	1 55/64	11/16	3/8	3.375	3/8	3.9
1 7/16		SEF-23	2-17	25718	127.0	104.8	32.5	9.5	33.3	42.9	47.2	17.5	9.5	85.73		1.77
	35	SFC-207	5207													
1 1/2		SFC-24	2-18													
1 9/16		SFC-25	2-19	7340	5 1/4	4 3/8	1 25/64	7/16	1 1/2	1 15/16	2 1/16	3/4	7/16	3.625	3/8	4.7
	40	SFC-208	5208	32648	133.4	111.1	35.3	11.1	38.1	49.2	52.4	19.1	11.1	92.08		2.13
1 5/8		SFC-26	2-110													
1 11/16		SFC-27	2-111	7901	6 1/8	5 1/8	1 27/64	7/16	1 1/2	1 15/16	2 19/64	3/4	7/16	4.250	7/16	6.0
1 3/4		SFC-28	2-112	35144	155.6	130.2	36.1	11.1	38.1	49.2	58.3	19.1	11.1	107.95		2.72
	45	SFC-209	5209													
1 7/8		SFC-30	2-114													
1 15/16		SFC-31	2-115	7889	6 1/8	5 1/8	1 25/64	7/16	1 9/16	2 1/32	2 15/32	3/4	15/32	4.250	7/16	6.5
2		SFC-32R	1-2	35090	155.6	130.2	35.3	11.1	39.7	51.6	62.7	19.1	11.9	107.95		2.95
	50	SFC-210	5210													
2		SFC-32	2-2													
2 1/8		SFC-34	2-22	9752	6 3/8	5 3/8	1 19/32	7/16	1 9/16	2 3/16	2 23/32	7/8	5/8	4.500	7/16	7.5
2 3/16		SFC-35	2-23	43377	161.9	136.5	40.5	11.1	39.7	55.6	69.1	22.2	15.9	114.30		3.40
	55	SFC-211	5211													
2 1/4		SFC-36	2-24													
2 3/8		SFC-38	2-26	11789	7 1/8	6	1 25/32	1/2	1 11/16	2 9/16	2 63/64	1	7/8	5.000	1/2	10.5
2 7/16		SFC-39	2-27	52437	181.0	152.4	45.2	12.7	42.9	65.1	75.8	25.4	22.2	127.00		4.76
	60	SFC-212	5212													
2 11/16		SFC-43	2-211	13971	7 5/8	6 1/2	2 5/32	9/16	1 3/4	2 27/32	3 7/16	1 5/32	1 3/32	5.500	1/2	14.5
	70	SFC-214	5214	62143	193.7	165.1	54.8	14.3	44.5	72.2	87.3	29.4	27.8	139.70		6.58
2 7/8		SFC-46	2-214													
2 15/16		SFC-47	2-215	14839	8 3/4	7 1/2	2 9/32	9/16	2	3 1/16	3 41/64	1 5/16	1 1/16	6.375	5/8	18.7
	75	SFC-215	5215	66004	222.3	190.5	57.9	14.3	50.8	77.8	92.5	33.3	27.0	161.93		8.48
3 3/16		SFC-51	2-33	17412	8 3/4	7 1/2	2 13/32	21/32	2	3 1/4	3 59/64	1 5/16	1 1/4	6.375	5/8	20.0
	80	SFC-216	5216	77449	222.3	190.5	61.1	16.7	50.8	82.6	99.6	33.3	31.8	161.93		9.07

For Standard Duty Bearing Inserts-Single Lock see page G-92.
*Recommended hole size for pilot +.002" / -.000".

Metric dimensions for reference only.

Performance Mounted Ball Bearings

SEALMASTER®

Duty: Standard
Rolling Elements: Ball
Housing: Cast Iron Piloted Flange Cartridge
Self Alignment: +/- 2 Degrees
Lock: SKWEZLOC Locking Collar
Seal: Felt
Optional Seal: Contact
Temperature: -20° to 220°F

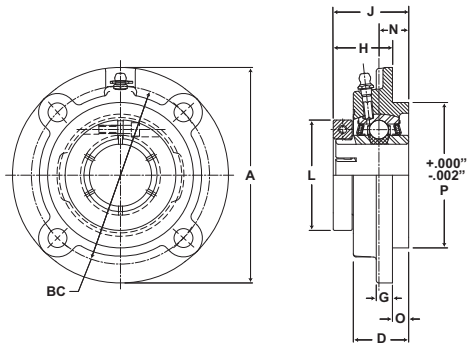

SFC-T Series Standard Duty Piloted Flange Cartridge- SKWEZLOC Locking Collar - Inch

Bore Diameter inch	Part No.	Bearing Insert No.	Basic Dynamic Rating lb/N	Dimensions inch / mm										Bolt Size	Unit Wt. lb/kg
				A	BC	D	G	H	J	L	N	O	P		
1 1/8 1 3/16 1 1/4	SFC-18T SFC-19T SFC-20RT	2-12T 2-13T 1-14T	4381 19487	4 3/8 111.1	3 5/8 92.1	1 11/64 29.8	3/8 9.5	1 3/8 34.9	1 5/8 41.3	2 3/16 55.6	5/8 15.9	1/4 6.4	3.000 76.200	5/16	3.2 1.45
1 1/4	SFC-20T	2-14T	5782 25718	5 127.0	4 1/8 104.8	1 9/32 32.5	3/8 9.5	1 3/8 34.9	1 3/4 44.5	2 7/16 61.9	11/16 17.5	3/8 9.5	3.375 85.725	3/8	4.2 1.91
1 3/8 1 7/16	SFC-22T SFC-23T	2-16T 2-17T	5782 25718	5 127.0	4 1/8 104.8	1 9/32 32.5	3/8 9.5	1 3/8 34.9	1 3/4 44.5	2 9/16 65.1	11/16 17.5	3/8 9.5	3.375 85.725	3/8	4.2 1.91
1 1/2 1 9/16	SFC-24T SFC-25T	2-18T 2-19T	7340 32648	5 1/4 133.4	4 3/8 111.1	1 25/64 35.3	7/16 11.1	1 9/16 39.7	2 50.8	2 11/16 68.3	3/4 19.1	7/16 11.1	3.625 92.075	3/8	5.0 2.27
1 5/8	SFC-26T	2-110T	7901 35144	6 1/8 155.6	5 1/8 130.2	1 27/64 36.1	7/16 11.1	1 9/16 39.7	2 50.8	2 13/16 71.4	3/4 19.1	7/16 11.1	4.250 107.950	7/16	6.3 2.86
1 11/16 1 3/4	SFC-27T SFC-28T	2-111T 2-112T	7901 35144	6 1/8 155.6	5 1/8 130.2	1 27/64 36.1	7/16 11.1	1 9/16 39.7	2 50.8	2 15/16 74.6	3/4 19.1	7/16 11.1	4.250 107.950	7/16	6.3 2.86
1 15/16 2	SFC-31T SFC-32RT	2-115T 1-2T	7889 35090	6 1/8 155.6	5 1/8 130.2	1 25/64 35.3	7/16 11.1	1 5/8 41.3	2 3/32 53.2	3 3/8 85.7	3/4 19.1	15/32 11.9	4.250 107.950	7/16	7.1 3.22
2	SFC-32T	2-2T	9752 43377	6 3/8 161.9	5 3/8 136.5	1 19/32 40.5	7/16 11.1	1 5/8 41.3	2 1/4 57.2	3 1/2 88.9	7/8 22.2	5/8 15.9	4.500 114.300	7/16	8.1 3.67
2 1/8 2 3/16	SFC-34T SFC-35T	2-22T 2-23T	9752 43377	6 3/8 161.9	5 3/8 136.5	1 19/32 40.5	7/16 11.1	1 5/8 41.3	2 1/4 57.2	3 5/8 92.1	7/8 22.2	5/8 15.9	4.500 114.300	7/16	8.1 3.67
2 1/4	SFC-36T	2-24T	11789 52437	7 1/8 181.0	6 152.4	1 25/32 45.2	1/2 12.7	1 3/4 44.5	2 5/8 66.7	4 1/16 103.2	1 25.4	7/8 22.2	5.000 127.000	1/2	11.7 5.31
2 3/8 2 7/16	SFC-38T SFC-39T	2-26T 2-27T	11789 52437	7 1/8 181.0	6 152.4	1 25/32 45.2	1/2 12.7	1 3/4 44.5	2 5/8 66.7	4 1/8 104.8	1 25.4	7/8 22.2	5.000 127.000	1/2	11.7 5.31

SFC-T Series Standard Piloted Flange Cartridge - SKWEZLOC Locking Collar - Metric -SKWEZ™

Bore Diameter mm	Part No.	Bearing Insert No.	Basic Dynamic Rating N/lb	Dimensions mm / inch										Bolt Size	Unit Wt. kg/lb
				A	BC	D	G	H	J	L	N	O	P		
30	SFC-206TMC	5206TMC	19487 4381	111.1 4 3/8	92.1 3 5/8	29.8 1 11/64	9.5 3/8	34.9 1 3/8	41.3 1 5/8	55.6 2 3/16	15.9 .63	6.4 1/4	76.200 3.000	M10	1.45 3.2
35	SFC-207TMC	5207TMC	25718 5782	127.0 5	104.8 4 1/8	32.5 1 9/32	9.5 3/8	34.9 1 3/8	44.5 1 3/4	65.1 2 9/16	17.5 1 1/16	9.5 3/8	85.725 3.375	M12	1.91 4.2
40	SFC-208TMC	5208TMC	32648 7340	133.4 5 1/4	111.1 4 3/8	35.3 1 25/64	11.1 7/16	39.7 1 9/16	50.8 2	68.3 2 11/16	19.1 3/4	11.1 7/16	92.075 3.625	M12	2.27 5
45	SFC-209TMC	5209TMC	35144 7901	155.6 6 1/8	130.2 5 1/8	36.1 1 27/64	11.1 7/16	39.7 1 9/16	50.8 2	74.6 2 15/16	19.1 3/4	11.1 7/16	107.950 4.250	M14	2.86 6.3
50	SFC-210TMC	5210TMC	35090 7889	155.6 6 1/8	130.2 5 1/8	35.3 1 25/64	11.1 7/16	41.3 1 5/8	53.2 2 3/32	85.7 3 3/8	19.1 3/4	11.9 15/32	107.950 4.250	M14	3.22 7.1
55	SFC-211TMC	5211TMC	43377 9752	161.9 6 3/8	136.5 5 3/8	40.5 1 19/32	11.1 7/16	41.3 1 5/8	57.2 2 1/4	92.1 3 5/8	22.2 7/8	15.9 5/8	114.300 4.500	M14	3.67 8.1
60	SFC-212TMC	5212TMC	52437 11789	181.0 7 1/8	152.4 6	45.2 1 25/32	12.7 1/2	44.5 1 3/4	66.7 2 5/8	104.8 4 1/8	25.4 1	22.2 7/8	127.000 5.000	M16	5.31 11.7

For Medium Duty SKWEZLOC Locking Collar Bearing Inserts see page G-93. For Replacement Lock Collar see page G-98.

SEALMASTER® Performance Mounted Ball Bearings

Duty: Medium

Rolling Elements: Ball

Housing: Cast Iron Piloted Flange Cartridge

Self Alignment: +/- 2 Degrees

Lock: Setscrew

Seal: Felt

Optional Seal: Contact

Temperature: -20° to 220°F

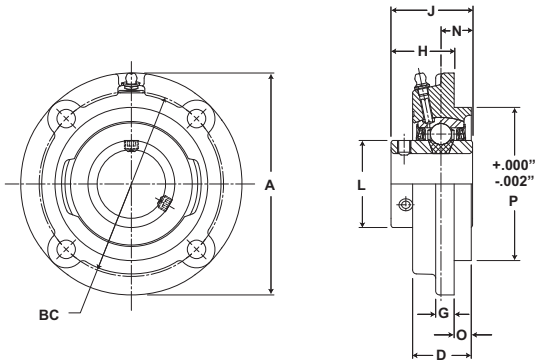

MFC Series Medium Duty Flange Cartridge Units - Setscrew Locking

Bore Diameter inch	Bore Diameter mm	Part No.	Bearing Insert No.	Basic Dynamic Rating lb/N	Dimensions inch / mm A	BC	D	G	H	J	L	N	O	P*	Bolt Size	Unit Wt. lb/kg
15/16		MFC-15	3-015	4381	4 3/8	3 5/8	1 11/64	3/8	1 5/16	1 9/16	1 19/32	5/8	1/4	3.000	5/16	3.0
1		MFC-16	3-1	19487	111.1	92.1	29.8	9.5	33.3	39.7	40.5	15.9	6.4	76.20		1.36
.984	25	MFC-305	5305													
1 3/16		MFC-19	3-13	5782	5	4 1/8	1 9/32	3/8	1 5/16	1 11/16	1 55/64	11/16	3/8	3.375	3/8	3.9
1 1/4		MFC-20	2-14	25718	127.0	104.8	32.5	9.5	33.3	42.9	47.2	17.5	9.5	85.73		1.77
1.181	30	MFC-306	5306													
1 7/16		MFC-23	3-17	7340	5 1/4	4 3/8	1 25/64	7/16	1 1/2	1 15/16	2 1/16	3/4	13/32	3.625	3/8	4.7
1.378	35	MFC-307	5307	32648	133.4	111.1	35.3	11.1	38.1	49.2	52.4	19.1	10.3	92.08		2.13
1 1/2		MFCH-24	3-18	7901	6 1/8	5 1/8	1 27/64	7/16	1 1/2	1 15/16	2 19/64	3/4	13/32	4.250	7/16	6
	40	MFC-308	5308	35144	155.6	130.2	36.1	11.1	38.1	49.2	58.3	19.1	10.3	107.95		2.72
1 11/16		MFC-27	3-111	7889	6 1/8	5 1/8	1 25/64	7/16	1 9/16	2 1/32	2 15/32	3/4	7/16	4.250	7/16	6.5
1 3/4		MFC-28	3-112	35090	155.6	130.2	35.3	11.1	39.7	51.6	62.7	19.1	11.1	107.95		2.95
	45	MFC-309	5309													
1 15/16		MFC-31	3-115	9752	6 3/8	5 3/8	1 19/32	7/16	1 9/16	2 3/16	2 23/32	7/8	19/32	4.500	7/16	7.5
2		MFC-32	2-2	43377	161.9	136.5	40.5	11.1	39.7	55.6	69.1	22.2	15.1	114.30		3.40
	50	MFC-310	5310													
2 3/16		MFC-35	3-23	11789	7 1/8	6	1 25/32	1/2	1 11/16	2 9/16	2 63/64	1	27/32	5.000	1/2	10.5
2 1/4		MFC-36	2-24	52437	181.0	152.4	45.2	12.7	42.9	65.1	75.8	25.4	21.4	127.00		4.76
	55	MFC-311	5311													
2 7/16		MFC-39	3-27	13971	7 5/8	6 1/2	2 5/32	9/16	1 3/4	2 7/8	3 7/16	1 1/16	1 3/32	5.500	1/2	14.0
2 1/2		MFC-40	3-28	62143	193.7	165.1	54.8	14.3	44.5	73.0	87.3	27.0	27.8	139.70		6.35
	65	MFC-313	5313													
2 11/16		MFC-43	3-211	14839	8 3/4	7 1/2	2 9/32	9/16	2	3 1/16	3 41/64	1 5/16	1 1/32	6.375	5/8	18.7
	70	MFC-314	5314	66004	222.3	190.5	57.9	14.3	50.8	77.8	92.5	33.3	26.2	161.93		8.48
2 15/16		MFC-47	3-215	17412	8 3/4	7 1/2	2 13/32	5/8	2	3 1/4	3 59/64	1 5/16	1 7/32	6.375	5/8	20.0
3		MFC-48	3-3	77449	222.3	190.5	61.1	15.9	50.8	82.6	99.6	33.3	31.0	161.93		9.07
	75	MFC-315	5315													
3 7/16		MFC-55	3-37	21566	10 1/4	8 5/8	2 23/32	3/4	2 21/32	3 25/32	4 25/64	1 9/16	1 3/32	7.375	3/4	32.0
3 1/2		MFC-56	2-38	95926	260.4	219.1	69.1	19.1	67.5	96.0	111.5	39.7	27.8	187.33		14.51
3 15/16		MFC-63	3-315	29905	10 7/8	9 3/8	3 7/32	7/8	3 1/2	4 5/8	5 11/64	1 15/16	1 3/32	8.125	3/4	44.0
4		MFC-64	3-4	133017	276.2	238.1	81.8	22.2	88.9	117.5	131.4	49.2	27.8	206.38		19.96
	100	MFC-320	5320													

For Medium Duty Bearing Inserts-Single Lock see page G-95.
*Recommended hole size for pilot 15/16 to 3 1/2 +.000" / -.002" and 3 15/16 to 4 +.000" / -.004".

Metric dimensions for reference only.
Not all parts are available from stock. Please contact customer service for availability (800) 626-2120.
For more information on bearing capabilities outside of our standard offering, please contact Application Engineering (800) 626-2093.

Performance Mounted Ball Bearings

SEALMASTER®

Duty: Medium
Rolling Elements: Ball
Housing: Cast Iron Piloted Flange Cartridge
Self Alignment: +/- 2 Degrees
Lock: SKWEZLOC Locking Collar
Seal: Felt
Optional Seal: Contact
Temperature: -20° to 220°F

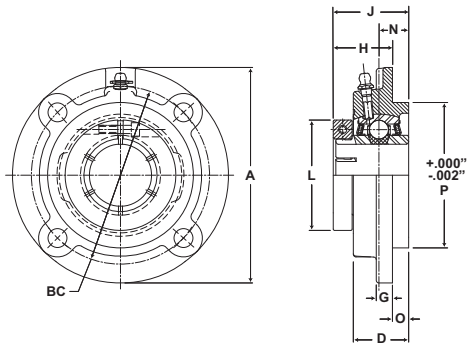

MFC-T Series Medium Duty Flange Cartridge Units - SKWEZLOC Locking Collar

Bore Diameter inch	Part No.	Bearing Insert No.	Basic Dynamic Rating lb/N	Dimensions inch / mm										Bolt Size	Unit Wt. lb/kg
				A	BC	D	G	H	J	L	N	O	P*		
1	MFC-16T	3-1T	4381 19487	4 3/8 111.1	3 5/8 92.1	1 3/16 30.2	3/8 9.5	1 3/8 34.9	1 5/8 41.3	2 1/16 52.4	5/8 15.9	1/4 6.4	3.000 76.20	5/16	3.2 1.45
1 3/16 1 1/4	MFC-19T MFC-20T	3-13T 2-14T	5782 25718	5 127.0	4 1/8 104.8	1 9/32 32.5	3/8 9.5	1 3/8 34.9	1 3/4 44.5	2 7/16 61.9	11/16 17.5	3/8 9.5	3.375 85.73	3/8	4.2 1.91
1 7/16 1 1/2	MFC-23T MFC-24T	3-17T 2-18T	7340 32648	5 1/4 133.4	4 3/8 111.1	1 25/64 35.3	7/16 11.1	1 9/16 39.7	2 50.8	2 11/16 68.3	3/4 19.1	7/16 11.1	3.625 92.08	3/8	5.2 2.36
1 1/2	MFCH-24T	3-18T	7901 35144	6 1/8 155.6	5 1/8 130.2	1 7/16 36.5	7/16 11.1	1 9/16 39.7	2 50.8	2 13/16 71.4	3/4 19.1	7/16 11.1	4.250 107.95	7/16	6.3 2.86
1 11/16 1 3/4	MFC-27T MFC-28T	3-111T 3-112T	7889 35090	6 1/8 155.6	5 1/8 130.2	1 25/64 35.3	7/16 11.1	1 5/8 41.3	2 3/32 53.2	3 1/4 82.6	3/4 19.1	15/32 11.9	4.250 107.95	7/16	7.1 3.22
1 15/16 2	MFC-31T MFC-32T	3-115T 2-2T	9752 43377	6 3/8 161.9	5 3/8 136.5	1 5/8 41.3	7/16 11.1	1 5/8 41.3	2 1/4 57.2	3 1/2 88.9	27/32 21.4	5/8 15.9	4.500 114.30	7/16	8.1 3.67
2 3/16 2 1/4	MFC-35T MFC-36T	3-23T 2-24T	11789 52437	7 1/8 181.0	6 152.4	1 25/32 45.2	1/2 12.7	1 3/4 44.5	2 5/8 66.7	4 1/16 103.2	1 25.4	7/8 22.2	5.000 127.00	1/2	11.7 5.31

For Medium Duty SKWEZLOC Locking Collar Bearing inserts see page G-96. For Replacement Lock Collar see page G-98.
*Recommended hole size for pilot +.000" / -.002".

SEALMASTER® Performance Mounted Ball Bearings

Duty: Medium

Rolling Elements: Ball

Housing: Cast Iron Piloted Flange Cartridge

Self Alignment: +/- 2 Degrees

Lock: Double Setscrew

Seal: Felt

Optional Seal: Contact

Temperature: -20° to 220°F

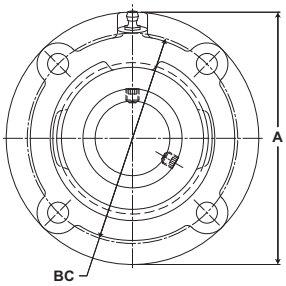

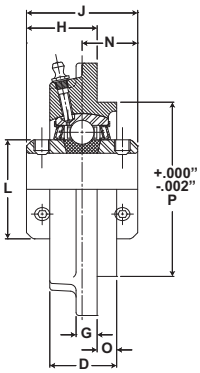

MFCD Series Medium Duty Flange Cartridge Units With Double Lock - Setscrew Locking

Bore Diameter inch	Part No.	Bearing Insert No.	Basic Dynamic Rating lb/N	Dimensions inch / mm										Bolt Size	Unit Wt. lb/kg
				A	BC	D	G	H	J	L	N	O	P*		
1	MFCD-16	3-1	4381 19487	4 3/8 111.1	3 5/8 92.1	1 11/64 29.8	3/8 9.5	1 5/16 33.3	1 3/4 44.5	1 19/32 40.5	11/16 17.5	1/4 6.4	3.000 76.20	5/16	3.8 1.7
1 3/16 1 1/4	MFCD-19 MFCD-20	3-13 2-14	5782 25718	5 127.0	4 1/8 104.8	1 9/32 32.5	3/8 9.5	1 5/16 33.3	2 50.8	1 55/64 47.2	11/16 17.5	3/8 9.5	3.375 85.73	3/8	3.9 1.8
1 7/16 1 1/2	MFCD-23 MFCD-24	3-17 2-18	7340 32648	5 1/4 133.4	4 3/8 111.1	1 25/64 35.3	7/16 11.1	1 1/2 38.1	2 5/16 58.7	2 1/16 52.4	3/4 19.1	13/32 10.3	3.625 92.08	3/8	4.7 2.1
1 11/16 1 3/4	MFCD-27 MFCD-28	3-111 3-112	7889 35090	6 1/8 155.6	5 1/8 130.2	1 25/64 35.3	7/16 11.1	1 9/16 39.7	2 1/2 63.5	2 15/32 62.7	23/32 18.3	7/16 11.1	4.250 107.95	7/16	6.5 3.0
1 15/16 2	MFCD-31 MFCD-32	3-115 2-2	9752 43377	6 3/8 161.9	5 3/8 136.5	1 19/32 40.5	7/16 11.1	1 9/16 39.7	2 5/8 66.7	2 23/32 69.1	27/32 21.4	19/32 15.1	4.500 114.30	7/16	7.6 3.5
2 3/16 2 1/4	MFCD-35 MFCD-36	3-23 2-24	11789 52437	7 1/8 181.0	6 152.4	1 25/32 45.2	1/2 12.7	1 11/16 42.9	3 1/8 79.4	3 1/8 79	31/32 24.6	27/32 21.4	5.000 127.00	1/2	10.4 4.7
2 7/16 2 1/2	MFCD-39 MFCD-40	3-27 3-28	13971 62143	7 5/8 193.7	6 1/2 165.1	2 5/32 54.8	9/16 14.3	1 3/4 44.5	3 1/2 88.9	3 7/16 87.3	1 5/32 29.4	1 3/32 27.8	5.500 139.70	1/2	14.3 6.5
2 11/16	MFCD-43	3-211	14839 66004	8 3/4 222.3	7 1/2 190.5	2 9/32 57.9	9/16 14.3	2 50.8	3 1/2 88.9	3 41/64 92.5	1 9/32 32.5	1 1/32 26.2	6.375 161.93	5/8	18.9 8.6
2 15/16 3	MFCD-47 MFCD-48	3-215 3-3	17412 77449	8 3/4 222.3	7 1/2 190.5	2 13/32 61.1	5/8 15.9	2 50.8	3 7/8 98.4	3 59/64 99.6	1 15/32 37.3	1 7/32 31.0	6.375 161.93	5/8	20.8 9.5
3 7/16 3 1/2	MFCD-55 MFCD-56	3-37 2-38	21566 95926	10 1/4 260.4	8 5/8 219.1	2 23/32 69.1	3/4 19.1	2 21/32 67.5	4 7/16 112.7	4 25/64 111.5	2 7/32 56.4	1 3/32 27.8	7.375 187.33	3/4	32.8 14.9
3 15/16 4	MFCD-63 MFCD-64	3-315 3-4	29905 133017	10 7/8 276.2	9 3/8 238.1	3 7/32 81.8	7/8 22.2	3 1/2 88.9	5 3/8 136.5	5 11/64 131.4	2 11/16 68.3	1 3/32 27.8	8.125 206.38	3/4	46.0 20.9

For Medium Duty Bearing Inserts-Single Lock see page G-95.

*Recommended hole size for pilot 15/16 to 3 1/2 +.000" / -.002" and 3 15/16 to 4 +.000" / -.004".

Metric dimensions for reference only.

Not all parts are available from stock. Please contact customer service for availability (800) 626-2120.

For more information on bearing capabilities outside of our standard offering, please contact Application Engineering (800) 626-2093.

Performance Mounted Ball Bearings

SEALMASTER®

Duty: Varies
Rolling Elements: Ball
Housing: Ductile Iron Hanger Bearing
Self Alignment: +/- 2 Degrees
Lock: Setscrew
Seal: Felt
Optional Seal: Contact
Temperature: -20° to 220°F

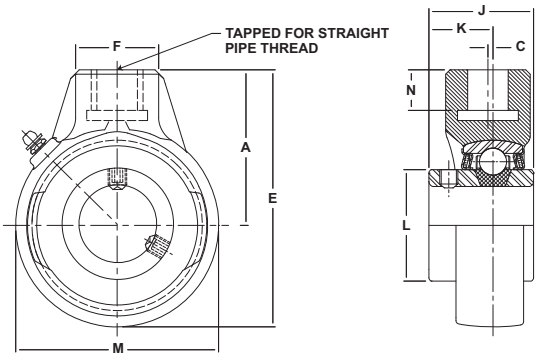

SEHB Series Hanger Bearing External Lube - Setscrew Locking

Bore Diameter inch	Bore Diameter mm	Part No.	Bearing Insert No.	Basic Dynamic Rating lb/N	Dimensions inch / mm A	C	E	F	J	K	L	M	Pipe Tap* N.P.S.M.	N Thread Length	Unit Wt. lb/kg
15/16		SEHB-15	3-015												
	25	SEHB-305	5305												
1		SEHB-16	3-1	4381 19487	2 1/2 63.5	-	4 1/16 103.2	1 9/16 39.7	1 1/2 38.1	7/8 22.2	1 19/32 40.5	3 1/8 79.4	3/4-14	13/16	2.2 1.00
1 1/16		SEHB-17	2-11												
	30	SEHB-206	5206												
1 3/16		SEHB-19	3-13												
1 1/4		SEHB-20	2-14												
1 5/16		SEHB-21	2-15	5782 25718	2 3/4 69.9	-	4 9/16 115.9	1 9/16 39.7	1 11/16 42.9	1 25.4	1 55/64 47.2	3 5/8 92.1	3/4-14	3/4	3.1 1.41
1 3/8		SEHB-22	2-16												
	35	SEHB-207	5207												
1 7/16		SEHB-23	3-17												
1 1/2		SEHB-24	2-18	7340	2 7/8	3/32	4 3/4	1 9/16	1 15/16	1 3/16	2 1/16	3 3/4	3/4-14	3/4	3.4
1 9/16		SEHB-25	2-19	32648	73.0	2.4	120.7	39.7	49.2	30.2	52.4	95.3			1.54
	40	SEHB-208	5208												
1 11/16		SEHB-27	3-111												
1 3/4		SEHB-28	3-112												
1 7/8		SEHB-30	2-114	7889	3 1/4	3/16	5 7/16	1 7/8	2 1/32	1 9/32	2 15/32	4 3/8	1-11 1/2	13/16	4.5
1 15/16		SEHB-31	2-115	35090	82.6	4.8	138.1	47.6	51.6	32.5	62.7	111.1			2.04
2		SEHB-32R	1-2												
	50	SEHB-210	5210												
2 3/16		SEHB-35	3-23												
2 1/4		SEHB-36	2-24												
2 3/8		SEHB-38	2-26	11789 52437	4 101.6	11/32 8.7	6 13/16 173.0	2 5/16 58.7	2 9/16 65.1	1 9/16 39.7	2 63/64 75.8	5 5/8 142.9	1 1/4-11 1/2	1 1/8	9 4.08
2 7/16		SEHB-39	2-27												
	60	SEHB-212	5212												
2 11/16		SEHB-43	3-211												
2 7/8		SEHB-46	2-214	14839 66004	4 5/8	3/8	7 7/8	2 3/4	3 1/16	1 3/4	3 41/64	6 1/2	1 1/2-11 1/2	1 1/4	14.6
2 15/16		SEHB-47	2-215		117.5	9.5	200.0	69.9	77.8	44.5	92.5	165.1			6.62
	75	SEHB-215	5215												
3		SEHB-48	3-3	17412 77449	4 7/8 123.8	5/16 7.9	8 5/16 211.1	2 13/16 71.4	3 1/4 82.6	1 15/16 49.2	3 59/64 99.6	6 7/8 174.6	1 1/2-11 1/2	1 1/4	16.8 7.62
3 3/16		SEHB-51	2-33												
	80	SEHB-216	5216												
3 15/16		SEHB-63	3-315	29905 133017	8 1/8 206.4		13 1/4 336.6	4 3/8 111.1	4 5/8 117.5	2 11/16 68.3	5 11/64 131.4	10 1/4 260.4	2 1/2-8 1/2	2 5/8	62 28.12
4		SEHB-64	3-4												
	100	SEHB-320	5320												

For Standard (2-) Duty Bearing Inserts-Double Lock see page G-95. For Medium (3-) Duty Bearing Inserts-Double Lock see page G-97.
*Use Straight Pipe Thread.
Note: Units may be provided with tight internal bearing clearance and housing fits by adding suffix BDZ to Part No., as SEHB-19 BDZ.

SEALMASTER® Performance Mounted Ball Bearings

Duty: Varies
Rolling Elements: Ball
Housing: Ductile Iron Hanger Bearing
Self Alignment: +/- 2 Degrees
Lock: SKWEZLOC Locking Collar
Seal: Felt
Optional Seal: Contact
Temperature: -20° to 220°F

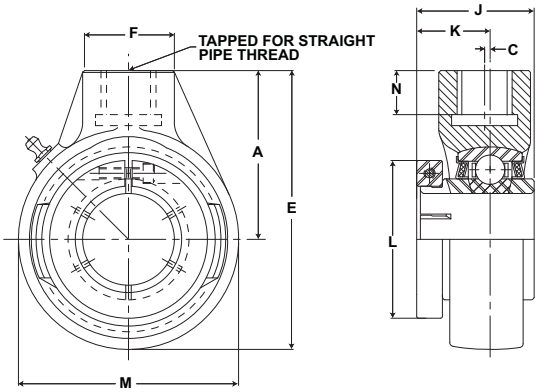

SEHB-T Series Hanger Bearing External Lube - SKWEZLOC Locking Collar

Bore Diameter inch	Bore Diameter mm	Part No.	Bearing Insert No.	Basic Dynamic Rating lb/N	Dimensions inch / mm A	C	E	F	J	K	L	M	Pipe Tap* N.P.S.M.	N Thread Length	Unit Wt. lb/kg
15/16		SEHB-15T	3-015T												
	25	SEHB-305T	5305T	4381 19487	2 1/2 63.5	-	4 1/16 103.2	1 9/16 39.7	1 9/16 39.7	7/8 22.2	2 1/16 52.4	3 1/8 79.4	3/4-14	13/16	2.2 1.00
1		SEHB-16T	3-1T												
1 1/16		SEHB-17T	2-11T												
1 3/16		SEHB-19T	3-13T	5782 25718	2 3/4 69.9	-	4 9/16 115.9	1 9/16 39.7	1 3/4 44.5	1 1/16 27.0	2 7/16 61.9	3 5/8 92.1	3/4-14	3/4	3.1 1.41
1 1/4		SEHB-20 T	2-14T												
1 7/16		SEHB-23T	3-17T												
1 1/2		SEHB-24T	2-18T	7340 32648	2 7/8 73.0	3/32 2.4	4 3/4 120.7	1 9/16 39.7	2 50.8	1 1/4 31.8	2 11/16 68.3	3 3/4 95.3	3/4-14	3/4	3.4 1.54
	40	SEHB-208T	5208T												
1 11/16		SEHB-27T	3-111T												
1 3/4		SEHB-28T	3-112T												
1 7/8		SEHB-30T	2-114T	7889 35090	3 1/4 82.6	3/16 4.8	5 7/16 138.1	1 7/8 47.6	2 3/32 53.2	1 11/32 34.1	3 1/4 82.6	4 3/8 111.1	1-11 1/2	13/16	4.5 2.04
1 15/16		SEHB-31T	2-115T												
2		SEHB-32T	1-2T												
	50	SEHB-210T	5210T												
2 3/16		SEHB-35T	3-23T	11789 52437	4 101.6	11/32 8.7	6 13/16 173.0	2 5/16 58.7	2 5/8 66.7	1 5/8 41.3	4 1/16 103.2	5 5/8 142.9	1 1/4-11 1/2	1 1/8	9 4.08
2 7/16	60	SEHB-39T SEHB-212T	2-27T 5212T	11789 52437	4 101.6	11/32 8.7	6 13/16 173.0	2 5/16 58.7	2 5/8 66.7	1 5/8 41.3	4 1/8 104.8	5 5/8 142.9	1 1/4-11 1/2	1 1/8	9 4.08

For Standard (2-) Duty Bearing Inserts - SKWELOC Locking Collar see page G-94. For Medium (3-) Duty Bearing Inserts - SKWELOC Locking Collar see page G-95.
For Replacement Lock Collar see page G-98.
*Use Straight Pipe Thread.
Note: Units may be provided with tight internal bearing clearance and housing fits by adding suffix BDZ to Part No., as SEHB-19T BDZ.

Metric dimensions for reference only.
Not all parts are available from stock. Please contact customer service for availability (800) 626-2120.
For more information on bearing capabilities outside of our standard offering, please contact Application Engineering (800) 626-2093.

Performance Mounted Ball Bearings

SEALMASTER®

Duty: Varies
Rolling Elements: Ball
Housing: Ductile Iron Hanger Bearing
Self Alignment: +/- 2 Degrees
Lock: Double Setscrew
Seal: Felt
Optional Seal: Contact
Temperature: -20° to 220°F

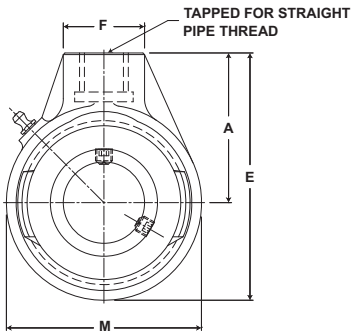

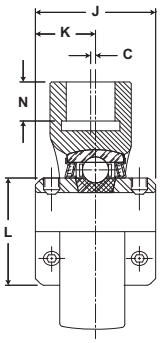

SEHBD Series Hanger Bearing External Lube - Double Set Screw Locking

Bore Diameter inch	Part No.	Bearing Insert No.	Basic Dynamic Rating lb/N	Dimensions inch / mm A	C	E	F	J	K	L	M	Pipe Tap* N.P.S.M.	N Thread Length	Unit Wt. lb/kg
1	SEHBD-16	3-1D	4381 19487	2 1/2 63.5	-	4 1/16 103.2	1 9/16 39.7	1 3/4 44.5	7/8 22.2	1 19/32 40.5	3 1/8 79.4	3/4-14	13/16	2.2 1.00
1 3/16 1 1/4	SEHBD-19 SEHBD-20	3-13D 2-14D	5782 25718	2 3/4 69.9	-	4 9/16 115.9	1 9/16 39.7	2 50.8	1 25.4	1 55/64 47.2	3 5/8 92.1	3/4-14	3/4	3.1 1.41
1 7/16 1 1/2	SEHBD-23 SEHBD-24	3-17D 2-18D	7340 32648	2 7/8 73.0	3/32 2.4	4 3/4 120.7	1 9/16 39.7	2 5/16 58.7	1 5/32 29.4	2 1/16 52.4	3 3/4 95.3	3/4-14	3/4	3.4 1.54
1 11/16 1 7/8 1 15/16	SEHBD-27 SEHBD-30 SEHBD-31	3-111D 2-114D 2-115D	7889 35090	3 1/4 82.6	3/16 4.8	5 7/16 138.1	1 7/8 47.6	2 1/2 63.5	1 1/4 31.8	2 15/32 62.7	4 3/8 111.1	1-11 1/2	13/16	4.5 2.04
2 3/16 2 7/16	SEHBD-35 SEHBD-39	3-23D 2-27D	11789 52437	3 7/16 87.3	1 1/8 28.6	5 7/8 149.2	1 7/8 47.6	3 1/8 79.4	1 9/16 39.7	2 23/32 69.1	4 7/8 123.8	1-11 1/2	1 1/8	9 4.08
2 11/16 2 15/16	SEHBD-43 SEHBD-47	3-211D 2-215D	13971 62143	4 5/8 117.5	3/8 9.5	7 7/8 200.0	2 3/4 69.9	3 1/2 88.9	3 1/2 88.9	3 41/64 92.5	6 1/2 165.1	1 1/2-11 1/2	1 1/4	14.6 6.62
3 15/16 4	SEHBD-63 SEHBD-64	3-315D 3-4D	29905 133017	8 1/8 206.4	-	13 1/4 336.6	4 3/8 111.1	5 3/8 136.5	5 3/8 136.5	5 11/64 131.4	10 1/4 260.4	2 1/2-8 1/2	2 5/8	62 28.12

For Standard (2-)Duty Bearing Inserts-Double Lock see page G-94. For Medium (3-) Duty Bearing Inserts-Double Lock see page G-97.
*Use Straight Pipe Thread.
Note: Units may be provided with tight internal and housing fits by adding suffix BDZ to Part No., as SEHBD-19 BDZ.

SEALMASTER® Performance Mounted Ball Bearings

Duty: Varies
Rolling Elements: Ball
Housing: Ductile Iron Hanger Bearing
Self Alignment: +/- 2 Degrees
Lock: Setscrew
Seal: Felt
Optional Seal: Contact
Temperature: -20° to 220°F

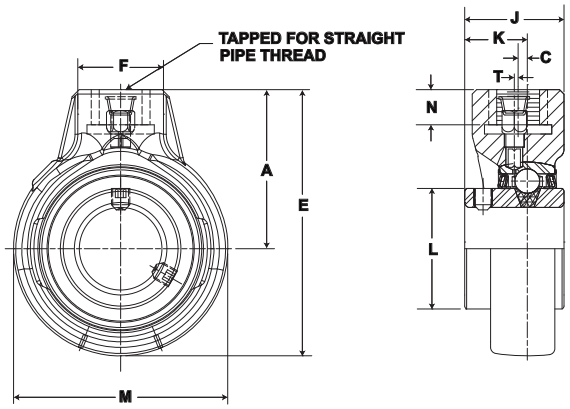

SCHB Series Hanger Bearing Internal Lube - Setscrew Locking

Bore Diameter inch	Bore Diameter mm	Part No.	Bearing Insert No.	Basic Dynamic Rating lb/N	Dimensions inch / mm A	C	E	F	J	K	L	M	Pipe Tap* N.P.S.M.	N Thread Length	T Brg. To Lub. Ftg. Centers	Unit Wt. lb/kg
15/16		SCHB-15	3-015													
	25	SCHB-305	5305	4381	2 1/2	-	4 1/16	1 9/16	1 1/2	7/8	1 19/32	3 1/8	3/4 - 14	13/16	◊ 7/32	2.2
1		SCHB-16	3-1	19487	63.5		103.2	39.7	38.1	22.2	40.5	79.4		0.37	0.10	1.00
1 1/16		SCHB-18	2-12													
	30	SCHB-206	5206													
1 3/16		SCHB-19	3-13													
1 1/4		SCHB-20	2-14													
1 5/16		SCHB-21	2-15	5782	2 3/4	-	4 9/16	1 9/16	1 11/16	1	1 55/64	3 5/8	3/4 - 14	3/4	◊ 1/4	3.1
1 3/8		SCHB-22	2-16	25718	69.9		115.9	39.7	42.9	25.4	47.2	92.1		0.34	0.11	1.41
	35	SCHB-207	5207													
1 7/16		SCHB-23	3-17													
1 1/2		SCHB-24	2-18	7340	2 7/8	3/32	4 3/4	1 9/16	1 15/16	1 3/16	2 1/16	3 3/4	3/4 - 14	3/4	◊ 19/64	3.4
1 9/16		SCHB-25	2-19	32648	73.0	2.4	120.7	39.7	49.2	30.2	52.4	95.3		0.34	0.13	1.54
	40	SCHB-208	5208													
1 11/16		SCHB-27	3-111													
1 3/4		SCHB-28	3-112													
1 7/8		SCHB-30	2-114	7889	3 1/4	3/16	5 7/16	1 7/8	2 1/32	1 9/32	2 15/32	4 3/8	1 - 11 1/2	13/16	17/64	4.5
1 15/16		SCHB-31	2-115	35090	82.6	4.8	138.1	47.6	51.6	32.5	62.7	111.1		0.37	0.12	2.04
2		SCHB-32R	1-2													
	50	SCHB-210	5210													
2 3/16		SCHB-35	3-23													
2 1/4		SCHB-36	2-24	11789	4	11/32	6 13/16	2 5/16	2 9/16	1 9/16	2 63/64	5 5/8	1 1/4 - 11 1/2	1 1/8	21/64	9.0
2 3/8		SCHB-38	2-26	52437	101.6	8.7	173.0	58.7	65.1	39.7	75.8	142.9		0.51	0.15	4.08
2 7/16		SCHB-39	2-27													
	60	SCHB-212	5212													
2 11/16		SCHB-43	3-211													
2 7/8		SCHB-46	2-214	14839	4 5/8	3/8	7 7/8	2 3/4	3 1/16	1 3/4	3 41/64	6 1/2	1 1/2 - 11 1/2	1 1/4	3/8	14.6
2 15/16		SCHB-47	2-215	66004	117.5	9.5	200.0	69.9	77.8	44.5	92.5	165.1		0.57	0.17	6.62
	75	SCHB-215	5215													
3 3/16		SCHB-51	2-33	17412	4 7/8	5/16	8 5/16	2 13/16	3 1/4	1 15/16	3 59/64	6 7/8	1 1/2 - 11 1/2	1 1/4	13/32	16.8
	80	SCHB-216	5216	77449	123.8	7.9	211.1	71.4	82.6	49.2	99.6	174.6		0.57	0.18	7.62
3 15/16		SCHB-63	3-315	29905	8 1/8		13 1/4	4 3/8	4 5/8	2 11/16	5 11/64	10 1/4	2 1/2 - 8 1/2	2 5/8	19/32	62
4		SCHB-64	3-4	133017	206.4		336.6	111.1	117.5	68.3	131.4	260.4		1.19	0.27	28.12
	100	SCHB-320	5320													

For Standard Duty Bearing inserts-Single Lock see page G-92.
◊ No Adapter or Fitting
*Use Straight Pipe Thread

Metric dimensions for reference only.
Not all parts are available from stock. Please contact customer service for availability (800) 626-2120.
For more information on bearing capabilities outside of our standard offering, please contact Application Engineering (800) 626-2093.

Performance Mounted Ball Bearings

SEALMASTER®

Duty: Standard

Rolling Elements: Ball

Housing: Cast Iron Cylindrical Cartridge

Self Alignment: +/- 2 Degrees

Lock: Setscrew

Seal: Felt

Optional Seal: Contact

Temperature: -20° to 220°F

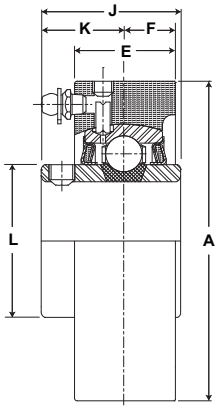

SC Series Standard Duty Cartridge Units - Setscrew Locking

Bore Diameter inch	Bore Diameter mm	Part No.	Bearing Insert No.	Basic Dynamic Rating lb/N	Dimensions inch / mm A ±.001"	E	F	J	L	K	Unit Wt. lb/kg
1/2		SC-8	2-08								
9/16		SC-9	2-09	2611	2.688	7/8	1/2	1 7/32	1 3/16	23/32	1.1
5/8		SC-10	2-010	11614	68.26	22.2	12.7	31.0	30.2	18.3	0.50
11/16		SC-11	2-011								
3/4		SC-12	2-012	2611	2.938	7/8	1/2	1 7/32	1 3/16	23/32	1.4
	20	SC-204	5204	11614	74.61	22.2	12.7	31.0	30.2	18.3	.63
13/16		SC-13	2-013								
7/8		SC-14	2-014	2801	3.125	1 1/32	9/16	1 3/8	1 3/8	13/16	1.9
15/16		SC-15	2-015	12459	79.38	26.2	14.3	34.9	34.9	20.6	0.86
1		SC-16	2-1								
	25	SC-205	5205								
1 1/16		SC-17	2-11								
1 1/8		SC-18	2-12	4381	3.500	1 3/32	5/8	1 1/2	1 19/32	7/8	2.5
1 3/16		SC-19	2-13	19487	88.90	27.8	15.9	38.1	40.5	22.2	1.13
1 1/4		SC-20R	1-14								
	30	SC-206	5206								
1 1/4		SC-20	2-14								
1 5/16		SC-21	2-15	5782	3.875	1 7/32	11/16	1 11/16	1 55/64	1	3.2
1 3/8		SC-22	2-16	25718	98.43	31.0	17.5	42.9	47.2	25.4	1.45
1 7/16		SC-23	2-17								
	35	SC-207	5207								
1 1/2		SC-24	2-18	7340	4.188	1 15/32	3/4	1 15/16	2 1/16	1 3/16	4.1
1 9/16		SC-25	2-19	32648	106.36	37.3	19.1	49.2	52.4	30.2	1.86
	40	SC-208	5208								
1 5/8		SC-26	2-110								
1 11/16		SC-27	2-111	7901	4.375	1 7/16	3/4	1 15/16	2 19/64	1 3/16	4.5
1 3/4		SC-28	2-112	35144	111.13	36.5	19.1	49.2	58.3	30.2	2.04
	45	SC-209	5209								
1 13/16		SC-29	2-113								
1 7/8		SC-30	2-114								
1 15/16		SC-31	2-115	7889	4.563	1 15/32	3/4	2 1/32	2 15/32	1 9/32	4.9
2		SC-32R	1-2	35090	115.89	37.3	19.1	51.6	62.7	32.5	2.22
	50	SC-210	5210								
2		SC-32	2-2								
2 1/8		SC-34	2-22	9752	4.938	1 19/32	7/8	2 3/16	2 23/32	1 5/16	5.8
2 3/16		SC-35	2-23	43377	125.41	40.5	22.2	55.6	69.1	33.3	2.63
	55	SC-211	5211								
2 1/4		SC-36	2-24								
2 3/8		SC-38	2-26	11789	5.875	1 5/8	1	2 9/16	2 63/64	1 9/16	9.0
2 7/16		SC-39	2-27	52437	149.23	41.3	25.4	65.1	75.8	39.7	4.08
	60	SC-212	5212								
2 1/2		SC-40	3-28	13971	6.250	2	1 1/16	2 3/4	3 7/16	1 11/16	12.6
2 11/16		SC-43	2-211	62143	158.75	50.8	27.0	69.9	87.3	42.9	5.72
	70	SC-214	5214								
2 7/8		SC-46	2-214	14839	6.625	2	1 5/16	3 1/16	3 21/32	1 3/4	13.5
2 15/16		SC-47	2-215	66004	168.28	50.8	33.3	77.8	92.9	44.5	6.12
	75	SC-215	5215								

For Standard Duty Bearing Inserts-Single Lock see page G-92.
For Housing fit guidelines see page G-261.

SEALMASTER® Performance Mounted Ball Bearings

Duty: Standard
Rolling Elements: Ball
Housing: Cast Iron Cylindrical Cartridge
Self Alignment: Consult Application Engineering*
Lock: SKWEZLOC Locking Collar
Seal: Felt
Optional Seal: Contact
Temperature: -20° to 220°F

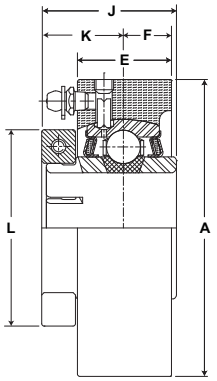

SC-T Series Standard Duty Cartridge Units - SKWEZLOC Locking Collar - Inch

Bore Diameter inch	Part No.	Bearing Insert No.	Basic Dynamic Rating lb/N	Dimensions inch / mm A ±.001"	E	F	J	K	L	Unit Wt. lb/kg
15/16 1	SC-15T* SC-16T*	2-015T 2-1T	2801 12459	3 1/8 79.38	1 1/32 26.2	9/16 14.3	1 7/16 36.5	7/8 22.2	1 15/16 49.2	1.9 .86
1 1/8 1 3/16 1 1/4	SC-18T* SC-19T* SC-20RT*	2-12T 2-13T 1-14T	4381 19487	3 1/2 88.90	1 3/32 27.8	9/16 14.3	1 9/16 39.7	15/16 23.8	2 3/16 55.6	2.5 1.13
1 1/4	SC-20T	2-14T	5782 25718	3 7/8 98.43	1 7/32 31.0	5/8 15.9	1 3/4 44.5	1 1/16 27.0	2 7/16 61.9	3.3 1.47
1 3/8 1 7/16	SC-22T SC-23T	2-16T 2-17T	5782 25718	3 7/8 98.43	1 7/32 31.0	5/8 15.9	1 3/4 44.5	1 1/16 27.0	2 9/16 65.1	3.2 1.45
1 1/2 1 9/16	SC-24T SC-25T	2-18T 2-19T	7340 32648	4 3/16 106.36	1 15/32 37.3	3/4 19.1	2 50.8	1 1/4 31.8	2 11/16 68.3	4.1 1.86
1 5/8	SC-26T	2-110T	7901 35144	4 3/8 111.13	1 7/16 36.5	23/32 18.3	2 50.8	1 1/4 31.8	2 13/16 71.4	4.6 2.09
1 11/16 1 3/4	SC-27T SC-28T	2-111T 2-112T	7901 35144	4 3/8 111.13	1 7/16 36.5	23/32 18.3	2 50.8	1 1/4 31.8	2 15/16 74.6	4.5 2.04
1 15/16	SC-31T	2-115T	7889 35090	4 9/16 115.89	1 15/32 37.3	3/4 19.1	2 3/32 53.2	1 11/32 34.1	3 3/8 85.7	4.9 2.22
2	SC-32T	2-2T	9752 43377	4 15/16 125.41	1 19/32 40.5	27/32 21.4	2 1/4 57.2	1 3/8 34.9	3 1/2 88.9	5.8 2.63
2 1/8 2 3/16	SC-34T SC-35T	2-22T 2-23T	9752 43377	4 15/16 125.41	1 19/32 40.5	27/32 21.4	2 1/4 57.2	1 3/8 34.9	3 5/8 92.1	5.8 2.63
2 1/4	SC-36T	2-24T	11789 52437	5 7/8 149.23	1 5/8 41.3	13/16 20.6	2 5/8 66.7	1 5/8 41.3	4 1/16 103.2	9.0 4.08
2 3/8 2 7/16	SC-38T SC-39T	2-26T 2-27T	11789 52437	5 7/8 149.23	1 5/8 41.3	13/16 20.6	2 5/8 66.7	1 5/8 41.3	4 1/8 104.8	9.0 4.08

SC-T Series Standard Cartridge Units - SKWEZLOC Locking Collar - Metric - SKWEZ™

Bore Diameter mm	Part No.	Bearing Insert No.	Basic Dynamic Rating lb/N	Dimensions mm / inch A ±.0025 mm	E	F	J	K	L	Unit Wt. lb/kg
25	SC-205TMC*	5205TMC	12459 2801	79.38 3 1/8	26.2 1 1/32	14.3 9/16	36.5 1 7/16	22.2 7/8	49.2 1 15/16	.86 1.9
30	SC-206TMC*	5206TMC	19487 4381	88.90 3 1/2	27.8 1 3/32	14.3 9/16	39.7 1 9/16	23.8 15/16	55.6 2 3/16	1.13 2.5
35	SC-207TMC	5207TMC	25718 5782	98.43 3 7/8	31.0 1 7/32	15.9 5/8	44.5 1 3/4	27.0 1 1/16	65.1 2 9/16	1.45 3.2
40	SC-208TMC	5208TMC	32648 7340	106.36 4 3/16	37.3 1 15/32	19.1 3/4	50.8 2	31.8 1 1/4	68.3 2 11/16	1.86 4.1
45	SC-209TMC	5209TMC	35144 7901	111.13 4 3/8	36.5 1 7/16	18.3 23/32	50.8 2	31.8 1 1/4	74.6 2 15/16	2.04 4.5
50	SC-210TMC	5210TMC	35090 7889	115.89 4 9/16	37.3 1 15/32	19.1 3/4	53.2 2 3/32	34.1 1 11/32	85.7 3 3/8	2.22 4.9
55	SC-211TMC	5211TMC	43377 9752	125.41 4 15/16	40.5 1 19/32	21.4 27/32	57.2 2 1/4	34.9 1 3/8	92.1 3 5/8	2.63 5.8
60	SC-212TMC	5212TMC	52437 11789	149.23 5 7/8	41.3 1 5/8	20.6 13/16	66.7 2 5/8	41.3 1 5/8	104.8 4 1/8	4.08 9.0

*Reversed Inner Ring; Misalignment Capability ± 1 1/2°
For standard Duty SKWEZLOC Bearing inserts see page G-93. For Housing fit guidelines see page G-261. For Replacement Lock Collar see page G-98.

Metric dimensions for reference only.

Performance Mounted Ball Bearings

SEALMASTER®

Duty: Medium

Rolling Elements: Ball

Housing: Cast Iron Cylindrical Cartridge

Self Alignment: +/- 2 Degrees

Lock: Setscrew

Seal: Felt

Optional Seal: Contact

Temperature: -20° to 220°F

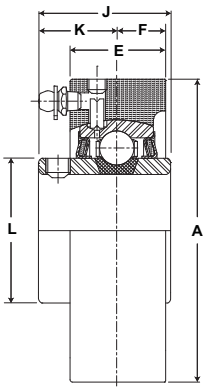

MSC Series Medium Duty Cartridge Units - Setscrew Locking

Bore Diameter inch	Bore Diameter mm	Part No.	Bearing Insert No.	Basic Dynamic Rating lb/N	Dimensions inch / mm A ±.001"	E	F	J	K	L	Unit Wt. lb/kg
15/16 1	25	MSC-15 MSC-16 MSC-305	3-015 3-1 5305	4381 19487	3.500 88.90	1 3/32 27.8	9/16 14.3	1 1/2 38.1	7/8 22.2	1 19/32 40.5	2.5 1.13
1 3/16 1 1/4	30	MSC-19 MSC-20 MSC-306	3-13 2-14 5306	5782 25718	3.875 98.43	1 7/32 31.0	5/8 15.9	1 11/16 42.9	1 25.4	1 55/64 47.2	3.2 1.45
1 3/8 1 7/16	35	MSC-22 MSC-23 MSC-307	3-16 3-17 5307	7340 32648	4.188 106.36	1 15/32 37.3	3/4 19.1	1 15/16 49.2	1 3/16 30.2	2 1/16 52.4	4.1 1.86
1 1/2	40	MSC-24 MSC-308	3-18 5308	7901 35144	4.375 111.13	1 7/16 36.5	23/32 18.3	1 15/16 49.2	1 3/16 30.2	2 19/64 58.3	4.5 2.04
1 11/16 1 3/4	45	MSC-27 MSC-28 MSC-309	3-111 3-112 5309	7889 35090	4.563 115.89	1 15/32 37.3	3/4 19.1	2 1/32 51.6	1 9/32 32.5	2 15/32 62.7	4.9 2.22
1 15/16 2	50	MSC-31 MSC-32 MSC-310	3-115 2-2 5310	9752 43377	4.938 125.41	1 19/32 40.5	51/64 20.2	2 3/16 55.6	1 5/16 33.3	2 23/32 69.1	5.8 2.63
2 3/16 2 1/4	55	MSC-35 MSC-36 MSC-311	3-23 2-24 5311	11789 52437	5.875 149.23	1 5/8 41.3	13/16 20.6	2 9/16 65.1	1 9/16 39.7	2 63/64 75.8	9.5 4.31
2 7/16 2 1/2	65	MSC-39 MSC-40 MSC-313	3-27 3-28 5313	13971 62143	6.250 158.75	2 50.8	1 25.4	2 3/4 69.9	1 11/16 42.9	3 7/16 87.3	12.6 5.72
2 11/16 2 3/4	70	MSC-43 MSC-44 MSC-314	3-211 3-212 5314	14839 66004	6.625 168.28	2 50.8	1 25.4	3 1/16 77.8	1 3/4 44.5	3 21/32 92.9	14.1 6.40
2 15/16 3	75	MSC-47 MSC-48 MSC-315	3-215 3-3 5315	17412 77449	7.000 177.80	2 3/16 55.6	1 3/32 27.8	3 1/4 82.6	1 15/16 49.2	3 59/64 99.6	16.6 7.53
3 3/16 3 1/4 3 3/8	80	MSC-51 MSC-52 MSC-54 MSC-316	3-33 2-34 2-36 5316	18681 83093	7.438 188.91	2 1/2 63.5	1 1/4 31.8	3 3/8 85.7	2 1/32 51.6	4 5/32 105.6	20.2 9.16
3 7/16 3 1/2		MSC-55 MSC-56	3-37 2-38	21566 95926	8.188 207.96	2 1/2 63.5	1 1/4 31.8	3 25/32 96.0	2 7/32 56.4	4 25/64 111.5	25.8 11.70
3 15/16 4	100	MSC-63 MSC-64 MSC-320	3-315 3-4 5320	29905 133017	9.500 241.30	3 76.2	1 1/2 38.1	4 5/8 117.5	2 11/16 68.3	5 11/64 131.4	42 19.05

For Medium Duty Bearing Inserts-Single Lock see page G-95.
For Housing fit guidelines see page G-261.

SEALMASTER® Performance Mounted Ball Bearings

Duty: Medium
Rolling Elements: Ball
Housing: Cast Iron Cylindrical Cartridge
Self Alignment: Consult Application Engineering*
Lock: SKWEZLOC Locking Collar
Seal: Felt
Optional Seal: Contact
Temperature: -20° to 220°F

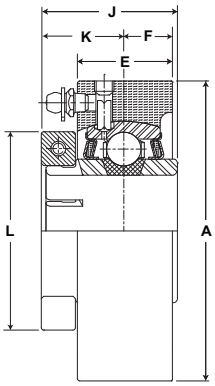

MSC-T Series Medium Duty Cartridge Units- SKWEZLOC Locking Collar

Bore Diameter inch	Part No.	Bearing Insert No.	Basic Dynamic Rating lb/N	Dimensions inch / mm A	E	J	K	F	L	Unit Wt. lb/kg
1	MSC-16T	3-1T	4381	3 1/2	1 3/32	1 9/16	15/16	9/16	2 1/16	2.5
			19487	88.90	27.8	39.7	23.8	14.3	52.4	1.13
1 3/16	MSC-19T	3-13T	5782	3 7/8	1 7/32	1 3/4	1 1/16	5/8	2 7/16	3.2
1 1/4	MSC-20T	2-14T	25718	98.43	31.0	44.5	27.0	15.9	61.9	1.45
1 7/16	MSC-23T	3-17T	7340	4 3/16	1 15/32	2	1 1/4	3/4	2 11/16	4.1
			32648	106.36	37.3	50.8	31.8	19.1	68.3	1.86
1 1/2	MSC-24T	3-18T	7901	4 3/8	1 7/16	2	1 1/4	23/32	2 13/16	4.5
			35144	111.13	36.5	50.8	31.8	18.3	71.4	2.04
1 11/16	MSC-27T	3-111T	7889	4 9/16	1 15/32	2 3/32	1 11/32	3/4	3 1/4	4.9
1 3/4	MSC-28T	3-112T	35090	115.89	37.3	53.2	34.1	19.1	82.6	2.22
1 15/16	MSC-31T	3-115T	9752	4 15/16	1 19/32	2 1/4	1 3/8	27/32	3 1/2	5.8
2	MSC-32T	2-2T	43377	125.41	40.5	57.2	34.9	21.4	88.9	2.63
2 3/16	MSC-35T	3-23T	11789	5 7/8	1 5/8	2 5/8	1 5/8	13/16	4 1/16	9.0
2 1/4	MSC-36T	2-24T	52437	149.23	41.3	66.7	41.3	20.6	103.2	4.08

* Misalignment capability reduced as a result of SKWEZLOC collar clearance.
For Medium Duty SKWEZLOC Locking Collar Bearing inserts see page G-96.
For Housing fit guidelines see page G-261.
For Replacement Lock Collar see page G-98.

Metric dimensions for reference only.
Not all parts are available from stock. Please contact customer service for availability (800) 626-2120.
For more information on bearing capabilities outside of our standard offering, please contact Application Engineering (800) 626-2093.

Performance Mounted Ball Bearings

SEALMASTER®

Duty: Standard
Rolling Elements: Ball
Housing: Cast Iron Wide Slot Take Up
Self Alignment: +/- 2 Degrees
Lock: Setscrew
Seal: Felt
Optional Seal: Contact
Temperature: -20° to 220°F

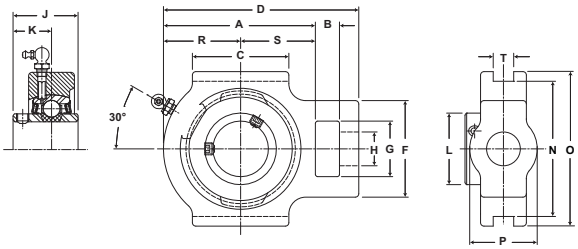

ST Series Standard Duty Take-UP Units - Setscrew Locking

Bore Diameter inch	Bore Diameter mm	Part No.	Bearing Insert No.	Basic Dynamic Rating lb/N	Dimensions inch / mm A	B	C	D	F	G	H Core	J	K	L	N	O	P Hub	R	S	T	Unit Wt. lb/kg
1/2 9/16 5/8 11/16 3/4	20	ST-8 ST-9 ST-10 ST-11 ST-12 ST-204	2-08 2-09 2-010 2-011 2-012 5204	2611 11614	2 11/16 68.3	5/8 15.9	2 50.8	3 11/16 93.7	2 50.8	1 1/4 31.8	3/4 19.1	1 7/32 31.0	23/32 18.3	1 3/16 30.2	3 76.2	3 1/2 88.9	1 3/8 34.9	1 5/16 33.3	1 3/8 34.9	17/32	2.1 0.95
13/16 7/8 15/16 1	25	ST-13 ST-14 ST-15 ST-16 ST-205	2-013 2-014 2-015 2-1 5205	2801 12459	2 13/16 71.4	5/8 15.9	2 50.8	3 13/16 96.8	2 50.8	1 1/4 31.8	3/4 19.1	1 3/8 34.9	13/16 20.6	1 3/8 34.9	3 76.2	3 1/2 88.9	1 1/2 38.1	1 3/8 34.9	1 7/16 36.5	17/32	2.6 1.18
1 1/16 1 1/8 1 3/16 1 1/4	30	ST-17 ST-18 ST-19 ST-20R ST-206	2-11 2-12 2-13 1-14 5206	4381 19487	3 7/16 87.3	5/8 15.9	2 1/4 57.2	4 7/16 112.7	2 3/16 55.6	1 7/16 36.5	7/8 22.2	1 1/2 38.1	7/8 22.2	1 19/32 40.5	3 1/2 88.9	4 101.6	1 3/4 44.5	1 11/16 42.9	1 3/4 44.5	17/32	3.4 1.54
1 1/4 1 5/16 1 3/8 1 7/16	35	ST-20 ST-21 ST-22 ST-23 ST-207	2-14 2-15 2-16 2-17 5207	5782 25718	3 15/16 100.0	5/8 15.9	2 1/2 63.5	5 1/16 128.6	2 1/2 63.5	1 7/16 36.5	7/8 22.2	1 11/16 42.9	1 25.4	1 55/64 47.2	3 1/2 88.9	4 101.6	1 3/4 44.5	2 50.8	1 15/16 49.2	17/32	4.0 1.81
1 1/2 1 9/16	40	ST-24 ST-25 ST-208	2-18 2-19 5208	7340 32648	4 5/16 109.5	3/4 19.1	3 1/4 82.6	5 11/16 144.5	3 1/4 82.6	1 15/16 49.2	1 1/8 28.6	1 15/16 49.2	1 3/16 30.2	2 1/16 52.4	4 101.6	4 1/2 114.3	2 1/8 54.0	2 3/16 55.6	2 1/8 54.0	11/16	6.0 2.7
1 5/8 1 11/16 1 3/4	45	ST-26 ST-27 ST-28 ST-209	2-110 2-111 2-112 5209	7901 35144	4 5/16 109.5	3/4 19.1	3 1/4 82.6	5 11/16 144.5	3 1/4 82.6	1 15/16 49.2	1 1/8 28.6	1 15/16 49.2	1 3/16 30.2	2 19/64 58.3	4 101.6	4 5/8 117.5	2 3/16 55.6	2 1/4 57.2	2 1/16 52.4	11/16	6.0 2.72
1 13/16 1 7/8 1 15/16 2	50	ST-29 ST-30 ST-31 ST-32R ST-210	2-113 2-114 2-115 1-2 5210	7889 35090	4 1/2 114.3	3/4 19.1	3 3/8 85.7	5 7/8 149.2	3 1/4 82.6	1 15/16 49.2	1 1/8 28.6	2 1/32 51.6	1 9/32 32.5	2 15/32 62.7	4 101.6	4 5/8 117.5	2 3/16 55.6	2 5/16 58.7	2 3/16 55.6	11/16	6.0 2.72
2 2 1/8 2 3/16	55	ST-32 ST-34 ST-35 ST-211	2-2 2-22 2-23 5211	9752 43377	5 127.0	1 25.4	3 3/4 95.3	6 3/4 171.5	4 101.6	2 1/2 63.5	1 3/8 34.9	2 3/16 55.6	1 5/16 33.3	2 23/32 69.1	5 1/8 130.2	5 3/4 146.1	2 1/4 57.2	2 9/16 65.1	2 7/16 61.9	1 1/16	9.8 4.4
2 1/4 2 3/8 2 7/16	60	ST-36 ST-38 ST-39 ST-212	2-24 2-26 2-27 5212	11789 52437	5 5/8 142.9	1 1/4 31.8	4 101.6	7 5/8 193.7	4 101.6	2 1/2 63.5	1 3/8 34.9	2 9/16 65.1	1 9/16 39.7	2 63/64 75.8	5 1/8 130.2	5 3/4 146.1	2 3/8 60.3	2 15/16 74.6	2 11/16 68.3	1 1/16	12.3 5.58
2 1/2 2 11/16	70	ST-40 ST-43 ST-214	3-28 2-211 5214	13971 62143	6 3/4 171.5	1 1/4 31.8	4 3/4 120.7	8 13/16 223.8	4 3/8 111.1	2 3/4 69.9	1 5/8 41.3	2 3/4 69.9	1 11/16 42.9	3 7/16 87.3	5 15/16 150.8	6 9/16 166.7	3 3/8 85.7	3 7/16 87.3	3 5/16 84.1	1 1/16	19.0 8.62
2 7/8 2 15/16	75	ST-46 ST-47 ST-215	2-214 2-215 5215	14839 66004	7 1/16 179.4	1 1/4 31.8	4 3/4 120.7	9 1/8 231.8	4 3/8 111.1	2 3/4 69.9	1 5/8 41.3	3 1/16 77.8	1 3/4 44.5	3 41/64 92.5	5 15/16 150.8	6 9/16 166.7	3 3/8 85.7	3 5/8 92.1	3 7/16 87.3	1 1/16 27.0	19.0 8.62
3 3/16	80	ST-51 ST-216	2-33 5216	17412 77449	7 3/16 182.6	1 1/4 31.8	4 3/4 120.7	9 1/4 235.0	4 3/8 111.1	2 3/4 69.9	1 5/8 41.3	3 1/4 82.6	1 15/16 49.2	3 59/64 99.6	6 1/2 165.1	7 1/4 184.2	3 3/8 85.7	3 3/4 95.3	3 7/16 87.3	1 1/16 27.0	22.1 10.02
3 1/4 3 3/8 3 7/16		ST-52 ST-54 ST-55	2-34 2-36 2-37	18681 83093	7 5/8 193.7	1 1/2 38.1	6 3/16 157.2	10 1/4 260.4	4 7/8 123.8	2 7/8 73.0	1 7/8 47.6	3 3/8 85.7	2 1/32 51.6	4 5/32 105.6	6 13/16 173.0	7 13/16 198.4	3 1/2 88.9	3 7/8 98.4	3 3/4 95.3	1 13/16 46.0	31.4 14.2

For Standard Duty Bearing Inserts-Single Lock see page G-92.
For Take-Up Frames see pages G-76 to G-78.

SEALMASTER® Performance Mounted Ball Bearings

Duty: Standard
Rolling Elements: Ball
Housing: Cast Iron Wide Slot Take Up
Self Alignment: +/- 2 Degrees
Lock: SKWEZLOC Locking Collar
Seal: Felt
Optional Seal: Contact
Temperature: -20° to 220°F

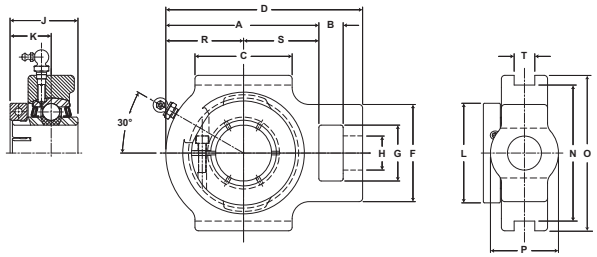

ST-T Series Standard Duty Take-Up Units - SKWEZLOC Locking Collar

Bore Diameter inch	Part No.	Bearing Insert No.	Basic Dynamic Rating lb/N	Dimensions inch / mm A	B	C	D	F	G	H Core	J	K	L	N	O	P Hub	R	S	T	Unit Wt. lb/kg
3/4	ST-12T	2-012T	2611 11614	2 11/16 68.3	5/8 15.9	2 50.8	3 11/16 93.7	2 50.8	1 1/4 31.8	3/4 19.1	1 9/32 32.5	25/32 19.8	1 3/4 44.5	3 76.2	3 1/2 88.9	1 3/8 34.9	1 5/16 33.3	1 3/8 34.9	17/32	2.2 1.00
15/16 1	ST-15T ST-16T	2-015T 2-1T	2801 12459	2 13/16 71.4	5/8 15.9	2 50.8	3 13/16 96.8	2 50.8	1 1/4 31.8	3/4 19.1	1 7/16 36.5	7/8 22.2	1 15/16 49.2	3 76.2	3 1/2 88.9	1 1/2 38.1	1 3/8 34.9	1 7/16 36.5	17/32	2.8 1.27
1 1/8 1 3/16	ST-18T ST-19T	2-12T 2-13T	4381 19487	3 7/16 87.3	5/8 15.9	2 1/4 57.2	4 7/16 112.7	2 3/16 55.6	1 7/16 36.5	7/8 22.2	1 9/16 39.7	15/16 23.8	2 3/16 55.6	3 1/2 88.9	4 101.6	1 3/4 44.5	1 11/16 42.9	1 3/4 44.5	17/32	3.6 1.63
1 1/4	ST-20T	2-14T	5782 25718	3 15/16 100.0	5/8 15.9	2 1/2 63.5	5 1/16 128.6	2 1/2 63.5	1 7/16 36.5	7/8 22.2	1 3/4 44.5	1 1/16 27.0	2 7/16 61.9	3 1/2 88.9	4 101.6	1 3/4 44.5	2 50.8	1 15/16 49.2	17/32	4.3 1.95
1 3/8 1 7/16	ST-22T ST-23T	2-16T 2-17T	5782 25718	3 15/16 100.0	5/8 15.9	2 1/2 63.5	5 1/16 128.6	2 1/2 63.5	1 7/16 36.5	7/8 22.2	1 3/4 44.5	1 1/16 27.0	2 9/16 65.1	3 1/2 88.9	4 101.6	1 3/4 44.5	2 50.8	1 15/16 49.2	17/32	4.3 1.95
1 1/2 1 9/16	ST-24T ST-25T	2-18T 2-19T	7340 32648	4 5/16 109.5	3/4 19.1	3 1/4 82.6	5 11/16 144.5	3 1/4 82.6	1 15/16 49.2	1 1/8 28.6	2 50.8	1 1/4 31.8	2 11/16 68.3	4 101.6	4 1/2 114.3	2 1/8 54.0	2 3/16 55.6	2 1/8 54.0	11/16	6.3 2.86
1 5/8	ST-26T	2-110T	7901 35144	4 5/16 109.5	3/4 19.1	3 1/4 82.6	5 11/16 144.5	3 1/4 82.6	1 15/16 49.2	1 1/8 28.6	2 50.8	1 1/4 31.8	2 13/16 71.4	4 101.6	4 5/8 117.5	2 3/16 55.6	2 1/4 57.2	2 1/16 52.4	11/16	6.3 2.86
1 11/16 1 3/4	ST-27T ST-28T	2-111T 2-112T	7901 35144	4 5/16 109.5	3/4 19.1	3 1/4 82.6	5 11/16 144.5	3 1/4 82.6	1 15/16 49.2	1 1/8 28.6	2 50.8	1 11/32 34.1	2 15/16 74.6	4 101.6	4 5/8 117.5	2 3/16 55.6	2 1/4 57.2	2 1/16 52.4	11/16	6.3 2.86
1 15/16 2	ST-31T ST-32RT	2-115T 1-2T	7889 35090	4 1/2 114.3	3/4 19.1	3 3/8 85.7	5 7/8 149.2	3 1/4 82.6	1 15/16 49.2	1 1/8 28.6	2 3/32 53.2	1 1/4 31.8	3 3/8 85.7	4 101.6	4 5/8 117.5	2 3/16 55.6	2 5/16 58.7	2 3/16 55.6	11/16	6.6 2.99
2	ST-32T	2-2T	9752 43377	5 127.0	1 25.4	3 3/4 95.3	6 3/4 171.5	4 101.6	2 1/2 63.5	1 3/8 34.9	2 1/4 57.2	1 3/8 34.9	3 1/2 88.9	5 1/8 130.2	5 3/4 146.1	2 1/4 57.2	2 9/16 65.1	2 7/16 61.9	1 1/16	10.4 4.72
2 1/8 2 3/16	ST-34T ST-35T	2-22T 2-23T	9752 43377	5 127.0	1 25.4	3 3/4 95.3	6 3/4 171.5	4 101.6	2 1/2 63.5	1 3/8 34.9	2 1/4 57.2	1 3/8 34.9	3 5/8 92.1	5 1/8 130.2	5 3/4 146.1	2 1/4 57.2	2 9/16 65.1	2 7/16 61.9	1 1/16	10.4 4.72
2 1/4	ST-36T	2-24T	11789 52437	5 5/8 142.9	1 1/4 31.8	4 101.6	7 5/8 193.7	4 101.6	2 1/2 63.5	1 3/8 34.9	2 5/8 66.7	1 5/8 41.3	4 1/16 103.2	5 1/8 130.2	5 3/4 146.1	2 3/8 60.3	2 15/16 74.6	2 11/16 68.3	1 1/16	13.4 6.08
2 3/8 2 7/16	ST-38T ST-39T	2-26T 2-27T	11789 52437	5 5/8 142.9	1 1/4 31.8	4 101.6	7 5/8 193.7	4 101.6	2 1/2 63.5	1 3/8 34.9	2 5/8 66.7	1 5/8 41.3	4 1/8 104.8	5 1/8 130.2	5 3/4 146.1	2 3/8 60.3	2 15/16 74.6	2 11/16 68.3	1 1/16	13.4 6.08

For Standard Duty Bearing Inserts - SKWEZLOC Locking Collar see page G-93
For Take-Up Frames see pages G-76 to G-78.
For Replacement Lock Collar see page G-98.

Metric dimensions for reference only.
Not all parts are available from stock. Please contact customer service for availability (800) 626-2120.
For more information on bearing capabilities outside of our standard offering, please contact Application Engineering (800) 626-2093.

Performance Mounted Ball Bearings

SEALMASTER®

Duty: Medium
Rolling Elements: Ball
Housing: Cast Iron Wide Slot Take Up
Self Alignment: +/- 2 Degrees
Lock: Setscrew
Seal: Felt
Optional Seal: Contact
Temperature: -20° to 220°F

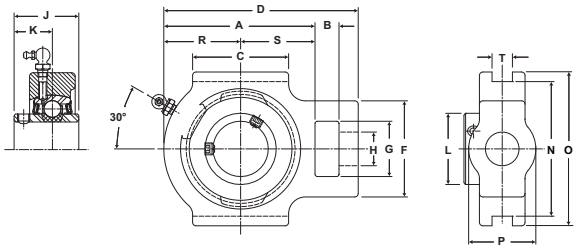

MST Series Medium Duty Take-Up Units - Setscrew Locking

Bore Diameter inch	Bore Diameter mm	Part No.	Bearing Insert No.	Basic Dynamic Rating lb/N	Dimensions inch / mm A	B	C	D	F	G	H Core	J	K	N	O	P Hub	R	S	T	Unit Wt. lb/kg
15/16 1	25	MST-15 MST-16 MST-305	3-015 3-1 5305	4381 19487	3 7/16 87.3	5/8 15.9	2 1/4 57.2	4 7/16 112.7	2 3/16 55.6	1 7/16 36.5	7/8 22.2	1 1/2 38.1	7/8 22.2	3 1/2 88.9	4 101.6	1 3/4 44.5	1 11/16 42.9	1 3/4 44.5	17/32	3.4 1.54
1 3/16 1 1/4	30	MST-19 MST-20 MST-306	3-13 2-14 5306	5782 25718	3 15/16 100.0	5/8 15.9	2 1/2 63.5	5 1/16 128.6	2 1/2 63.5	1 7/16 36.5	7/8 22.2	1 11/16 42.9	1 25.4	3 1/2 88.9	4 101.6	1 3/4 44.5	2 50.8	1 15/16 49.2	17/32	4.0 1.81
1 7/16	35	MST-23 MST-307	3-17 5307	7340 32648	4 5/16 109.5	3/4 19.1	3 1/4 82.6	5 11/16 144.5	3 1/4 82.6	1 15/16 49.2	1 1/8 28.6	1 15/16 49.2	1 3/16 30.2	4 101.6	4 1/2 114.3	2 1/8 54.0	2 3/16 55.6	2 1/8 54.0	11/16	6.2 2.81
1 1/2	40	MST-24 MST-308	3-18 5308	7901 35144	4 5/16 109.5	3/4 19.1	3 1/4 82.6	5 11/16 144.5	3 1/4 82.6	1 15/16 49.2	1 1/8 28.6	1 15/16 49.2	1 3/16 30.2	4 101.6	4 5/8 117.5	2 3/16 55.6	2 1/4 57.2	2 1/16 52.4	11/16	6.2 2.81
1 11/16 1 3/4	45	MST-27 MST-28 MST-309	3-111 3-112 5309	7889 35090	4 1/2 114.3	3/4 19.1	3 3/8 85.7	5 7/8 149.2	3 1/4 82.6	1 15/16 49.2	1 1/8 28.6	2 1/32 51.6	1 9/32 32.5	4 101.6	4 5/8 117.5	2 3/16 55.6	2 5/16 58.7	2 3/16 55.6	11/16	6.4 2.90
1 15/16 2	50	MST-31 MST-32 MST-310	3-115 2-2 5310	9752 43377	5 127.0	1 25.4	3 3/4 95.3	6 3/4 171.5	4 101.6	2 1/2 63.5	1 3/8 34.9	2 3/16 55.6	1 5/16 33.3	5 1/8 130.2	5 3/4 146.1	2 1/4 57.2	2 9/16 65.1	2 7/16 61.9	11/16	10.0 4.54
2 3/16 2 1/4	55	MST-35 MST-36 MST-311	3-23 2-24 5311	11789 52437	5 5/8 142.9	1 1/4 31.8	4 101.6	7 5/8 193.7	4 101.6	2 1/2 63.5	1 3/8 34.9	2 9/16 65.1	1 9/16 39.7	5 1/8 130.2	5 3/4 146.1	2 3/8 60.3	2 15/16 74.6	2 11/16 68.3	1 1/16	12.3 5.58
2 7/16 2 1/2	65	MST-39 MST-40 MST-313	3-27 3-28 5313	13971 62143	6 3/4 171.5	1 1/4 31.8	4 3/4 120.7	8 13/16 223.8	4 3/8 111.1	2 3/4 69.9	1 5/8 41.3	2 3/4 69.9	1 11/16 42.9	5 15/16 150.8	6 9/16 166.7	3 3/8 85.7	3 7/16 87.3	3 5/16 84.1	1 1/16	19.5 8.85
2 11/16	70	MST-43 MST-314	3-211 5314	14839 66004	7 1/16 179.4	1 1/4 31.8	4 3/4 120.7	9 1/8 231.8	4 3/8 111.1	2 3/4 69.9	1 5/8 41.3	3 1/16 77.8	1 3/4 44.5	5 15/16 150.8	6 9/16 166.7	3 3/8 85.7	3 5/8 92.1	3 7/16 87.3	1 1/16	19.8 8.98
2 15/16 3	75	MST-47 MST-48 MST-315	3-215 3-3 5315	17412 77449	7 3/16 182.6	1 1/4 31.8	4 3/4 120.7	9 1/4 235.0	4 3/8 111.1	2 3/4 69.9	1 5/8 41.3	3 1/4 82.6	1 15/16 49.2	6 1/2 165.1	7 1/4 184.2	3 3/8 85.7	3 3/4 95.3	3 7/16 87.3	1 1/16	23.0 10.43
3 3/16 3 1/4	80	MST-51 MST-52 MST-316	3-33 2-34 5316	18681 83093	7 5/8 193.7	1 1/2 38.1	6 3/16 157.2	10 1/4 260.4	4 7/8 123.8	2 7/8 73.0	1 7/8 47.6	3 3/8 85.7	2 1/32 51.6	6 13/16 173.0	7 13/16 198.4	3 1/2 88.9	3 7/8 98.4	3 3/4 95.3	1 13/16	31.8 14.42
3 15/16 4	100	MST-63 MST-64 MST-320	3-315 3-4 5320	29905 133017	9 1/4 235.0	1 1/2 38.1	6 1/2 165.1	11 7/8 301.6	4 7/8 123.8	2 7/8 73.0	1 7/8 47.6	4 5/8 117.5	2 11/16 68.3	8 3/8 212.7	9 3/8 238.1	3 1/2 88.9	4 3/4 120.7	4 1/2 114.3	1 13/16	50.0 22.68

For Medium Duty Bearing Inserts-Single Lock see page G-95.
For Take-Up Frames see page G-78.

SEALMASTER® Performance Mounted Ball Bearings

Duty: Medium
Rolling Elements: Ball
Housing: Cast Iron Wide Slot Take Up
Self Alignment: +/- 2 Degrees
Lock: SKWEZLOC Locking Collar
Seal: Felt
Optional Seal: Contact
Temperature: -20° to 220°F

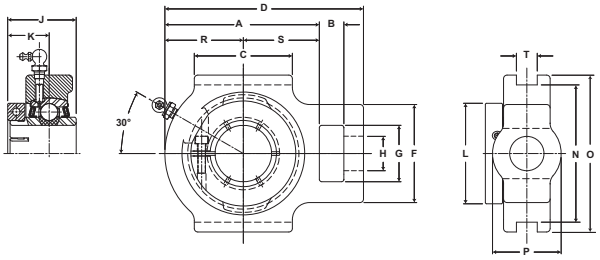

MST-T Series Medium Duty Take-Up Units - SKWEZLOC Locking Collar

Bore Diameter inch	Part No.	Bearing Insert No.	Basic Dynamic Rating lb/N	Dimensions inch / mm A	B	C	D	F	G	H Core	J	K	L	N	O	P Hub	R	S	T	Unit Wt. lb/kg
1	MST-16T	3-1T	4381 19487	3 7/16 87.3	5/8 15.9	2 1/4 57.2	4 7/16 112.7	2 3/16 55.6	1 7/16 36.5	7/8 22.2	1 9/16 39.7	15/16 23.8	2 1/16 52.4	3 1/2 88.9	4 101.6	1 3/4 44.5	1 11/16 42.9	1 3/4 44.5	17/32	3.6 1.63
1 3/16 1 1/4	MST-19T MST-20T	3-13T 2-14T	5782 25718	3 15/16 100.0	5/8 15.9	2 1/2 63.5	5 1/16 128.6	2 1/2 63.5	1 7/16 36.5	7/8 22.2	1 3/4 44.5	1 1/16 27.0	2 7/16 61.9	3 1/2 88.9	4 101.6	1 3/4 44.5	2 50.8	1 15/16 49.2	17/32	4.3 1.95
1 7/16	MST-23T	3-17T	7340 32648	4 5/16 109.5	3/4 19.1	3 1/4 82.6	5 11/16 144.5	3 1/4 82.6	1 15/16 49.2	1 1/8 28.6	2 50.8	1 1/4 31.8	2 11/16 68.3	4 101.6	4 1/2 114.3	2 1/8 54.0	2 3/16 55.6	2 1/8 54.0	11/16	6.3 2.86
1 1/2	MST-24T	3-18T	7901 35144	4 5/16 109.5	3/4 19.1	3 1/4 82.6	5 11/16 144.5	3 1/4 82.6	1 15/16 49.2	1 1/8 28.6	2 50.8	1 1/4 31.8	2 13/16 71.4	4 101.6	4 5/8 117.5	2 3/16 55.6	2 1/4 57.2	2 1/16 52.4	11/16	6.3 2.86
1 11/16 1 3/4	MST-27T MST-28T	3-111T 3-112T	7889 35090	4 1/2 114.3	3/4 19.1	3 3/8 85.7	5 7/8 149.2	3 1/4 82.6	1 15/16 49.2	1 1/8 28.6	2 3/32 53.2	1 11/32 34.1	3 1/4 82.6	4 101.6	4 5/8 117.5	2 3/16 55.6	2 5/16 58.7	2 3/16 55.6	11/16	6.6 2.99
1 15/16 2	MST-31T MST-32T	3-115T 2-2T	9752 43377	5 127.0	1 25.4	3 3/4 95.3	6 3/4 171.5	4 101.6	2 1/2 63.5	1 3/8 34.9	2 1/4 57.2	1 3/8 34.9	3 1/2 88.9	5 1/8 130.2	5 3/4 146.1	2 1/4 57.2	2 9/16 65.1	2 7/16 61.9	1 1/16	10.4 4.72
2 3/16 2 1/4	MST-35T MST-36T	3-23T 2-24T	11789 52437	5 5/8 142.9	1 1/4 31.8	4 101.6	7 5/8 193.7	4 101.6	2 1/2 63.5	1 3/8 34.9	2 5/8 66.7	1 5/8 41.3	4 1/16 103.2	5 1/8 130.2	5 3/4 146.1	2 3/8 60.3	2 15/16 74.6	2 11/16 68.3	1 1/16	13.4 6.08

For medium duty SKWEZLOC Locking Collar Bearing Inserts see page G-96.
For Take-Up Frames see page G-80.
For Replacement Lock Collar see page G-98.

Metric dimensions for reference only.
Not all parts are available from stock. Please contact customer service for availability (800) 626-2120.
For more information on bearing capabilities outside of our standard offering, please contact Application Engineering (800) 626-2093.

Performance Mounted Ball Bearings

SEALMASTER®

Duty: Standard
Rolling Elements: Ball
Housing: Center Pull Take Up Frame & Take Up Housing
Self Alignment: +/- 2 Degrees
Lock: Setscrew
Optional Lock: SKWEZLOC Locking Collar
Seal: Felt
Optional Seal: Contact
Temperature: -20° to 220°F

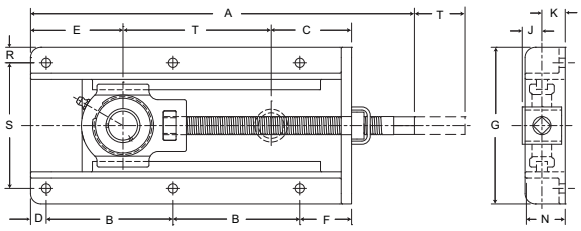

STH Center Pull Take Up Frames

Bore Diameter inch	Bore Diameter mm	Part No.	Housing Assembly Included	Bearing Insert No.	T Travel	A	B	C	D	E	F	G	J	K	N	R	S	Bolt Size	Unit Wt. lb/kg	Frame Only Part No.
					Dimensions inch / mm															
7/8		STH-14-6	ST-14	2-014	6 152.4	15 381.0	4 5/8 117.5	3 1/4 82.6	3/4 19.1	3 1/4 82.6	2 1/2 63.5	7 9/16 192.1	13/16 20.6	1 1/8 28.6	1 3/4 44.5	3/4 19.1	6 1/16 154.0	3/8	11.6 5.3	STH 12 TO 16-6 DZU
		STH-14-9			9 228.6	18 457.2	6 1/8 155.6												13.6 6.2	STH 12 TO 16-9 DZU
15/16		STH-15-6	ST-15	2-015	6 152.4	15 381.0	4 5/8 117.5	3 1/4 82.6	3/4 19.1	3 1/4 82.6	2 1/2 63.5	7 9/16 192.1	13/16 20.6	1 1/8 28.6	1 3/4 44.5	3/4 19.1	6 1/16 154.0	3/8	11.6 5.3	STH 12 TO 16-6 DZU
		STH-15-9			9 228.6	18 457.2	6 1/8 155.6												13.6 6.2	STH 12 TO 16-9 DZU
	25	STH-205-6	ST-205	5205	6 152.4	15 381.0	4 5/8 117.5	3 1/4 82.6	3/4 19.1	3 1/4 82.6	2 1/2 63.5	7 9/16 192.1	13/16 20.6	1 1/8 28.6	1 3/4 44.5	3/4 19.1	6 1/16 154.0	3/8	11.6 5.3	STH 12 TO 16-6 DZU
		STH-205-9			9 228.6	18 457.2	6 1/8 155.6												13.6 6.2	STH 12 TO 16-9 DZU
1		STH-16-6	ST-16	2-1	6 152.4	15 381.0	4 5/8 117.5	3 1/4 82.6	3/4 19.1	3 1/4 82.6	2 1/2 63.5	7 9/16 192.1	13/16 20.6	1 1/8 28.6	1 3/4 44.5	3/4 19.1	6 1/16 154.0	3/8	11.6 5.3	STH 12 TO 16-6 DZU
		STH-16-9			9 228.6	18 457.2	6 1/8 155.6												13.6 6.2	STH 12 TO 16-9 DZU
1 1/8		STH-18-6	ST-18	2-12	6 152.4	16 1/8 409.6	5 127.0	3 1/2 88.9	3/4 19.1	3 3/4 95.3	2 1/2 63.5	8 1/16 204.8	7/8 22.2	1 1/4 31.8	1 3/4 44.5	3/4 19.1	6 9/16 166.7	3/8	14.1 6.4	STH 17 TO 16-6 DZU
		STH-18-9			9 228.6	19 1/8 485.8	6 1/2 165.1												17.4 7.9	STH 17 TO 16-9 DZU
	30	STH-206-6	ST-206	5206	6 152.4	16 1/8 409.6	5 127.0	3 1/2 88.9	3/4 19.1	3 3/4 95.3	2 1/2 63.5	8 1/16 204.8	7/8 22.2	1 1/4 31.8	1 3/4 44.5	3/4 19.1	6 9/16 166.7	3/8	14.1 6.4	STH 17 TO 19-6 DZU
		STH-206-9			9 228.6	19 1/8 485.8	6 1/2 165.1												16 7.3	STH 17 TO 19-9 DZU
1 3/16		STH-19-6	ST-19	2-13	6 152.4	16 1/8 409.6	5 127.0	3 1/2 88.9	3/4 19.1	3 3/4 95.3	2 1/2 63.5	8 1/16 204.8	7/8 22.2	1 1/4 31.8	1 3/4 44.5	3/4 19.1	6 9/16 166.7	3/8	14.1 6.4	STH 17 TO 19-6 DZU
		STH-19-9			9 228.6	19 1/8 485.8	6 1/2 165.1												16 7.3	STH 17 TO 19-9 DZU
1 1/4		STH-20-9	ST-20	2-14	9 228.6	19 11/16 500.1	6 13/16 173.0	3 7/8 98.4	3/4 19.1	4 101.6	2 1/2 63.5	8 1/16 204.8	1 25.4	1 1/4 31.8	1 3/4 44.5	3/4 19.1	6 9/16 166.7	3/8	16 7.3	STH 20 TO 23-9 DZU
		STH-20-12			12 304.8	22 11/16 576.3	8 5/16 211.1												19.5 8.8	STH 20 TO 23-12 DZU
1 3/8		STH-22-9	ST-22	2-16	9 228.6	19 11/16 500.1	6 13/16 173.0	3 7/8 98.4	3/4 19.1	4 101.6	2 1/2 63.5	8 1/16 204.8	1 25.4	1 1/4 31.8	1 3/4 44.5	3/4 19.1	6 9/16 166.7	3/8	17.4 7.9	STH 20 TO 23-9 DZU
		STH-22-12			12 304.8	22 11/16 576.3	8 5/16 211.1												19.5 8.8	STH 20 TO 23-12 DZU
	35	STH-207-9	ST-207	5207	9 228.6	19 11/16 500.1	6 13/16 173.0	3 7/8 98.4	3/4 19.1	4 101.6	2 1/2 63.5	8 1/16 204.8	1 25.4	1 1/4 31.8	1 3/4 44.5	3/4 19.1	6 9/16 166.7	3/8	17.4 7.9	STH 20 TO 23-9 DZU
		STH-207-12			12 304.8	22 11/16 576.3	8 5/16 211.1												19.5 8.8	STH 20 TO 23-12 DZU
1 7/16		STH-23-9	ST-23	2-17	9 228.6	19 11/16 500.1	6 13/16 173.0	3 7/8 98.4	3/4 19.1	4 101.6	2 1/2 63.5	8 1/16 204.8	1 25.4	1 1/4 31.8	1 3/4 44.5	3/4 19.1	6 9/16 166.7	3/8	17.4 7.9	STH 20 TO 23-9 DZU
		STH-23-12			12 304.8	22 11/16 576.3	8 5/16 211.1												19.5 8.8	STH 20 TO 23-12 DZU
1 1/2		STH-24-12	ST-24	2-18	12 304.8	23 9/16 598.5	8 9/16 217.5	4 1/4 108.0	7/8 22.2	4 1/4 108.0	2 1/2 63.5	9 5/16 236.5	1 3/16 30.2	1 3/8 34.9	2 50.8	7/8 22.2	7 9/16 192.1	3/8	27.2 12.3	STH 24 TO 28-12 DZU
		STH-24-18			18 457.2	29 9/16 750.9	11 9/16 293.7												32 14.5	STH 24 TO 28-18 DZU

See notes on page G-78.

SEALMASTER® Performance Mounted Ball Bearings

Duty: Standard
Rolling Elements: Ball
Housing: Cast Iron Center Pull Take Up Frame & Take Up Housing
Self Alignment: +/- 2 Degrees
Lock: Setscrew
Optional Lock: SKWEZLOC Locking Collar
Seal: Felt
Optional Seal: Contact
Temperature: -20° to 220°F

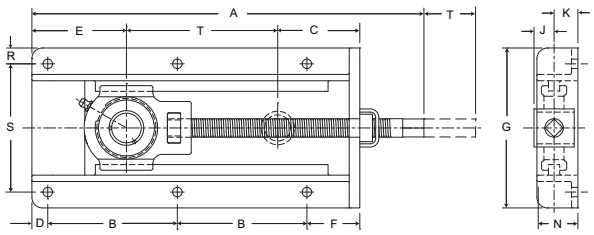

STH Center Pull Take Up Frames

Bore Diameter inch	Bore Diameter mm	Part No.	Housing Assembly Included	Bearing Insert No.	T Travel	A	B	C	D	E	F	G	J	K	N	R	S	Bolt Size	Unit Wt. lb/kg	Frame Only Part No.
					Dimensions inch / mm															
1 9/16		STH-25-12	ST-25	2-19	12 304.8	23 9/16 598.5	8 9/16 217.5	4 1/4 108.0	7/8 22.2	4 1/4 108.0	2 1/2 63.5	9 5/16 236.5	1 3/16 30.2	1 3/8 34.9	2 50.8	7/8 22.2	7 9/16 192.1	3/8	27.2 12.3	STH 24 TO 28-12 DZU
		STH-25-18			18 457.2	29 9/16 750.9	11 9/16 293.7												32.0 14.5	STH 24 TO 28-18 DZU
	40	STH-208-12	ST-208	5208	12 304.8	23 9/16 598.5	8 9/16 217.5	4 1/4 108.0	7/8 22.2	4 1/4 108.0	2 1/2 63.5	9 5/16 236.5	1 3/16 30.2	1 3/8 34.9	2 50.8	7/8 22.2	7 9/16 192.1	3/8	27.2 12.3	STH 24 TO 28-12 DZU
		STH-208-18			18 457.2	29 9/16 750.9	11 9/16 293.7												32.0 14.5	STH 24 TO 28-18 DZU
1 5/8		STH-26-12	ST-26	2-110	12 304.8	23 9/16 598.5	8 9/16 217.5	4 1/4 108.0	7/8 22.2	4 1/4 108.0	2 1/2 63.5	9 5/16 236.5	1 3/16 30.2	1 3/8 34.9	2 50.8	7/8 22.2	7 9/16 192.1	3/8	27.2 12.3	STH 24 TO 28-12 DZU
		STH-26-18			18 457.2	29 9/16 750.9	11 9/16 293.7												32.0 14.5	STH 24 TO 28-18 DZU
1 11/16		STH-27-12	ST-27	2-111	12 304.8	23 9/16 598.5	8 9/16 217.5	4 1/4 108.0	7/8 22.2	4 1/4 108.0	2 1/2 63.5	9 5/16 236.5	1 3/16 30.2	1 3/8 34.9	2 50.8	7/8 22.2	7 9/16 192.1	3/8	27.2 12.3	STH 24 TO 28-12 DZU
		STH-27-18			18 457.2	29 9/16 750.9	11 9/16 293.7												32.0 14.5	STH 24 TO 28-18 DZU
1 3/4		STH-28-12	ST-28	2-112	12 304.8	23 9/16 598.5	8 9/16 217.5	4 1/4 108.0	7/8 22.2	4 1/4 108.0	2 1/2 63.5	9 5/16 236.5	1 3/16 30.2	1 3/8 34.9	2 50.8	7/8 22.2	7 9/16 192.1	3/8	27.2 12.3	STH 24 TO 28-12 DZU
		STH-28-18			18 457.2	29 9/16 750.9	11 9/16 293.7												32.0 14.5	STH 24 TO 28-18 DZU
	45	STH-209-12	ST-209	5209	12 304.8	23 9/16 598.5	8 9/16 217.5	4 1/4 108.0	7/8 22.2	4 1/4 108.0	2 1/2 63.5	9 5/16 236.5	1 3/16 30.2	1 3/8 34.9	2 50.8	7/8 22.2	7 9/16 192.1	3/8	27.2 12.3	STH 24 TO 28-12 DZU
		STH-209-18			18 457.2	29 9/16 750.9	11 9/16 293.7												32.0 14.5	STH 24 TO 28-18 DZU
1 7/8		STH-30-12	ST-30	2-114	12 304.8	23 11/16 601.7	8 5/8 219.1	4 3/8 111.1	7/8 22.2	4 1/4 108.0	2 1/2 63.5	9 5/16 236.5	1 9/32 32.5	1 3/8 34.9	2 50.8	7/8 22.2	7 9/16 192.1	1/2	27.2 12.3	STH 30 TO 31-12 DZU
		STH-30-18			18 457.2	29 11/16 754.1	11 5/8 295.3												33.0 15.0	STH 30 TO 31-18 DZU
1 15/16		STH-31-12	ST-31	2-115	12 304.8	23 11/16 601.7	8 5/8 219.1	4 3/8 111.1	7/8 22.2	4 1/4 108.0	2 1/2 63.5	9 5/16 236.5	1 9/32 32.5	1 3/8 34.9	2 50.8	7/8 22.2	7 9/16 192.1	1/2	27.2 12.3	STH 30 TO 31-12 DZU
		STH-31-18			18 457.2	29 11/16 754.1	11 5/8 295.3												33.0 15.0	STH 30 TO 31-18 DZU
	50	STH-210-12	ST-210	5210	12 304.8	23 11/16 601.7	8 5/8 219.1	4 3/8 111.1	7/8 22.2	4 1/4 108.0	2 1/2 63.5	9 5/16 236.5	1 9/32 32.5	1 3/8 34.9	2 50.8	7/8 22.2	7 9/16 192.1	1/2	27.2 12.3	STH 30 TO 31-12 DZU
		STH-210-18			18 457.2	29 11/16 754.1	11 5/8 295.3												33.0 15.0	STH 30 TO 31-18 DZU
2		STH-32-12	ST-32	2-2	12 304.8	24 13/16 630.2	9 1/16 230.2	4 7/8 123.8	7/8 22.2	4 1/2 114.3	2 3/8 60.3	11 3/16 284.2	1 5/16 33.3	1 1/2 38.1	2 1/2 63.5	7/8 22.2	9 7/16 239.7	1/2	41.6 18.9	STH 32 TO 35-12 DZU
		STH-32-18			18 457.2	30 13/16 782.6	12 1/16 306.4												50.6 23.0	STH 32 TO 35-18 DZU
2 1/8		STH-34-12	ST-34	2-22	12 304.8	24 13/16 630.2	9 1/16 230.2	4 7/8 123.8	7/8 22.2	4 1/2 114.3	2 3/8 60.3	11 3/16 284.2	1 5/16 33.3	1 1/2 38.1	2 1/2 63.5	7/8 22.2	9 7/16 239.7	1/2	41.6 18.9	STH 32 TO 35-12 DZU
		STH-34-18			18 457.2	30 13/16 782.6	12 1/16 306.4												50.6 23.0	STH 32 TO 35-18 DZU
	55	STH-211-12	ST-211	5211	12 304.8	24 13/16 630.2	9 1/16 230.2	4 7/8 123.8	7/8 22.2	4 1/2 114.3	2 3/8 60.3	11 3/16 284.2	1 5/16 33.3	1 1/2 38.1	2 1/2 63.5	7/8 22.2	9 7/16 239.7	1/2	41.6 18.9	STH 32 TO 35-12 DZU
		STH-211-18			18 457.2	30 13/16 782.6	12 1/16 306.4												50.6 23.0	STH 32 TO 35-18 DZU

See notes on page G-78.

Metric dimensions for reference only.
Not all parts are available from stock. Please contact customer service for availability (800) 626-2120.
For more information on bearing capabilities outside of our standard offering, please contact Application Engineering (800) 626-2093.

Performance Mounted Ball Bearings

SEALMASTER®

Duty: Standard
Rolling Elements: Ball
Housing: Cast Iron Center Pull Take Up Frame & Take Up Housing
Self Alignment: +/- 2 Degrees
Lock: Setscrew
Optional Lock: SKWEZLOC Locking Collar
Seal: Felt
Optional Seal: Contact
Temperature: -20° to 220°F

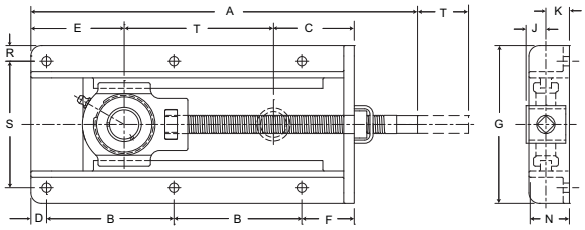

STH Center Pull Take Up Frames

Bore Diameter inch	Bore Diameter mm	Part No.	Housing Assembly Included	Bearing Insert No.	T Travel	A	B	C	D	E	F	G	J	K	N	R	S	Bolt Size	Unit Wt. lb/kg	Frame Only Part No.
					Dimensions inch / mm															
2 3/16		STH-35-12	ST-35	2-23	12 304.8	24 13/16 630.2	9 1/16 230.2	4 7/8 123.8	7/8 22.2	4 1/2 114.3	2 3/8 60.3	11 3/16 284.2	1 5/16 33.3	1 1/2 38.1	2 1/2 63.5	7/8 22.2	9 7/16 239.7	1/2	41.6 18.9	STH 32 TO 35-12 DZU
		STH-35-18			18 457.2	30 13/16 782.6	12 1/16 306.4												50.6 23.0	STH 32 TO 35-18 DZU
2 1/4		STH-36-12	ST-36	2-24	12 304.8	25 9/16 649.3	9 9/16 242.9	5 3/8 136.5	7/8 22.2	5 127.0	2 3/8 60.3	11 3/16 284.2	1 9/16 39.7	1 1/2 38.1	2 1/2 63.5	7/8 22.2	9 7/16 239.7	1/2	45.0 20.4	STH 36 TO 39-12 DZU
		STH-36-18			18 457.2	31 9/16 801.7	12 9/16 319.1												53.0 24.0	STH 36 TO 39-18 DZU
	60	STH-212-12	ST-212	5212	12 304.8	25 9/16 649.3	9 9/16 242.9	5 3/8 136.5	7/8 22.2	5 127.0	2 3/8 60.3	11 3/16 284.2	1 9/16 39.7	1 1/2 38.1	2 1/2 63.5	7/8 22.2	9 7/16 239.7	1/2	45.0 20.4	STH 36 TO 39-12 DZU
		STH-212-18			18 457.2	31 9/16 801.7	12 9/16 319.1												53.0 24.0	STH 36 TO 39-18 DZU
2 3/8		STH-38-12	ST-38	2-26	12 304.8	25 9/16 649.3	9 9/16 242.9	5 3/8 136.5	7/8 22.2	5 127.0	2 3/8 60.3	11 3/16 284.2	1 9/16 39.7	1 1/2 38.1	2 1/2 63.5	7/8 22.2	9 7/16 239.7	1/2	45.0 20.4	STH 36 TO 39-12 DZU
		STH-38-18			18 457.2	31 9/16 801.7	12 9/16 319.1												53.0 24.0	STH 36 TO 39-18 DZU
2 7/16		STH-39-12	ST-39	2-27	12 304.8	25 9/16 649.3	9 9/16 242.9	5 3/8 136.5	7/8 22.2	5 127.0	2 3/8 60.3	11 3/16 284.2	1 9/16 39.7	1 1/2 38.1	2 1/2 63.5	7/8 22.2	9 7/16 239.7	1/2	45.0 20.4	STH 36 TO 39-12 DZU
		STH-39-18			18 457.2	31 9/16 801.7	12 9/16 319.1												53.0 24.0	STH 36 TO 39-18 DZU
2 1/2		STH-40-12	ST-40	3-28	12 304.8	27 1/2 698.5	10 1/4 260.4	6 3/16 157.2	7/8 22.2	5 11/16 144.5	2 1/2 63.5	12 304.8	1 11/16 42.9	2 50.8	3 76.2	7/8 22.2	10 1/4 260.4	5/8	62.5 28.3	STH 40 TO 47-12 DZU
		STH-40-18			18 457.2	33 1/2 850.9	13 1/4 336.6												73.7 33.4	STH 40 TO 47-18 DZU
2 11/16		STH-43-12	ST-43	2-211	12 304.8	27 1/2 698.5	10 1/4 260.4	6 3/16 157.2	7/8 22.2	5 11/16 144.5	2 1/2 63.5	12 304.8	1 11/16 42.9	2 50.8	3 76.2	7/8 22.2	10 1/4 260.4	5/8	62.5 28.3	STH 40 TO 47-12 DZU
		STH-43-18			18 457.2	33 1/2 850.9	13 1/4 336.6												73.7 33.4	STH 40 TO 47-18 DZU
	70	STH-214-12	ST-214	5214	12 304.8	27 1/2 698.5	10 1/4 260.4	6 3/16 157.2	7/8 22.2	5 11/16 144.5	2 1/2 63.5	12 304.8	1 11/16 42.9	2 50.8	3 76.2	7/8 22.2	10 1/4 260.4	5/8	62.5 28.3	STH 40 TO 47-12 DZU
		STH-214-18			18 457.2	33 1/2 850.9	13 1/4 336.6												73.7 33.4	STH 40 TO 47-18 DZU
2 7/8		STH-46-12	ST-46	2-214	12 304.8	27 1/2 698.5	10 1/4 260.4	6 3/16 157.2	7/8 22.2	5 11/16 144.5	2 1/2 63.5	12 304.8	1 3/4 44.5	2 50.8	3 76.2	7/8 22.2	10 1/4 260.4	5/8	62.5 28.3	STH 40 TO 47-12 DZU
		STH-46-18			18 457.2	33 1/2 850.9	13 1/4 336.6												73.7 33.4	STH 40 TO 47-18 DZU
2 15/16		STH-47-12	ST-47	2-215	12 304.8	27 1/2 698.5	10 1/4 260.4	6 3/16 157.2	7/8 22.2	5 11/16 144.5	2 1/2 63.5	12 304.8	1 3/4 44.5	2 50.8	3 76.2	7/8 22.2	10 1/4 260.4	5/8	62.5 28.3	STH 40 TO 47-12 DZU
		STH-47-18			18 457.2	33 1/2 850.9	13 1/4 336.6												73.7 33.4	STH 40 TO 47-18 DZU
	75	STH-215-12	ST-215	5215	12 304.8	27 1/2 698.5	10 1/4 260.4	6 3/16 157.2	7/8 22.2	5 11/16 144.5	2 1/2 63.5	12 304.8	1 3/4 44.5	2 50.8	3 76.2	7/8 22.2	10 1/4 260.4	5/8	62.5 28.3	STH 40 TO 47-12 DZU
		STH-215-18			18 457.2	33 1/2 850.9	13 1/4 336.6												73.7 33.4	STH 40 TO 47-18 DZU

The STH series style H, are side mounting frame take-up units designed to incorporate the ST series take-up units (see pages G-72 to G-74), as indicated in the accompanying charts.
They are used where shaft adjustment and/or belt tightening is required in conveyor applications. They are manufactured from heavy gauge structural steel members and equipped with heavy duty Acme (square) threads for positive action.
Adjustment is made by turning the square head with an open end wrench.
For SKWEZLOC Locking Collar add T suffix example STH-23T-12
For Contact Seal add C suffix example STH-23C-12

SEALMASTER® Performance Mounted Ball Bearings

Duty: Medium

Rolling Elements: Ball

Housing: Cast Iron Center Pull Take Up Frame & Take Up Housing

Self Alignment: +/- 2 Degrees

Lock: Setscrew

Seal: Felt

Optional Seal: Contact

Temperature: -20° to 220°F

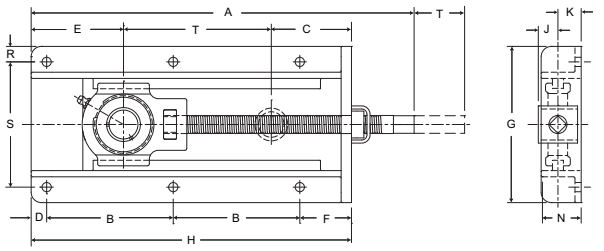

MSTH Center Pull Take Up Frames

Bore Diameter inch	Part No.	Housing Assembly Included	Bearing Insert No.	Dimensions inch / mm														Bolt Size	Unit Wt. lb/kg	Frame Only Part No.
				T Travel	A	B	C	D	E	F	G	H	J	K	N	R	S			
1 11/16	MSTH-31-12	MST-31	3-115	12	23 11/16	8 5/8	4 3/8	7/8	4 1/4	2 1/2	9 5/16	20 5/8	1 9/32	1 1/2	2 1/2	7/8	9 7/16	1/2	41.6	STH 32 TO 35-12
2	MSTH-32-12	MST-32	2-2	304.8	630.2	230.2	123.8	22.2	114.3	60.3	284.2	542.9	33.3	38.1	63.5	22.2	239.7		18.9	
2 7/16	MSTH-39-12	MST-39	3-27	12	25 9/16	9 9/16	5 3/8	7/8	5	2 3/8	11 3/16	22 3/8	1 9/16	1 1/2	2 1/2	7/8	9 7/16	5/8	62.5	STH 40 TO 47-12
2 1/2	MSTH-40-12	MST-40	3-28	304.8	698.5	260.4	157.2	22.2	144.5	63.5	304.8	606.4	44.5	50.8	76.2	22.2	260.4		28.3	

The MSTH series style H, are side mounting take-up units designed to incorporate MST series take-up units (see page G-80) as indicated in the table above. They are used where shaft adjustment and/or belt tightening is required in conveyor applications. They are manufactured from heavy gauge structural steel members and equipped with heavy duty Acme (square) threads for positive action. Adjustment is made by turning the square head with an open wrench.

Metric dimensions for reference only.
Not all parts are available from stock. Please contact customer service for availability (800) 626-2120.
For more information on bearing capabilities outside of our standard offering, please contact Application Engineering (800) 626-2093.

Performance Mounted Ball Bearings

SEALMASTER®

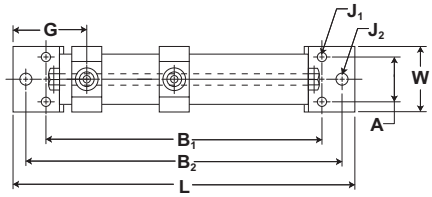

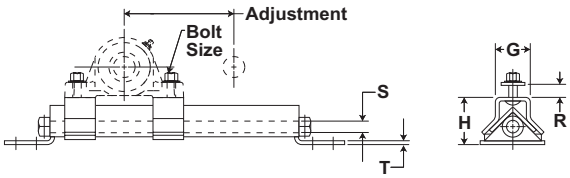

TF and TFS Series Standard Duty Top Mount Take-Up Frame

Bore Diameter Range	Frame Part No.	Adjustment	Dimensions Inch / Mm												Bolt Size	Unit Wt. lb/kg
			L	B1	B2	W	A	G MIN	H	J1	J2	R	S	T		
3/4 - 1”	6TF16	6 152.4	17 1/8 435.0	13 7/8 352.4	15 7/8 403.2	3 1/4 82.6	2 1/4 57.2	3 5/16 84.1	2 3/8 60.3	7/16 11.1	9/16 14.3	9/16 14.3	5/8 15.9	3/16 4.8	3/8 10	6.0 2.72
	9TF16	9 228.6	20 1/8 511.2	16 7/8 428.6	18 7/8 479.4	3 1/4 82.6	2 1/4 57.2	3 5/16 84.1	2 3/8 60.3	7/16 11.1	9/16 14.3	9/16 14.3	5/8 15.9	3/16 4.8	3/8 10	6.7 3.04
1 1/16 - 1 15/16”	6TF31	6 152.4	18 3/16 462.0	15 7/16 392.1	16 15/16 430.2	3 1/2 88.9	2 1/2 63.5	3 3/8 85.7	2 13/16 71.4	7/16 11.1	9/16 14.3	7/8 22.2	3/4 19.1	3/16 4.8	1/2 13	8.9 4.04
	9TF31	9 228.6	22 5/8 574.7	19 7/8 504.8	21 3/8 542.9	3 1/2 88.9	2 1/2 63.5	3 3/8 85.7	2 13/16 71.4	7/16 11.1	9/16 14.3	7/8 22.2	3/4 19.1	3/16 4.8	1/2 13	10.3 4.67
	12TF31	12 304.8	24 3/16 614.4	21 7/16 544.5	22 15/16 582.6	3 1/2 88.9	2 1/2 63.5	3 3/8 85.7	2 13/16 71.4	7/16 11.1	9/16 14.3	7/8 22.2	3/4 19.1	3/16 4.8	1/2 13	10.9 4.94
	18TF31	18 457.2	31 5/8 803.3	28 7/8 733.4	30 3/8 771.5	3 1/2 88.9	2 1/2 63.5	3 3/8 85.7	2 13/16 71.4	7/16 11.1	9/16 14.3	7/8 22.2	3/4 19.1	3/16 4.8	1/2 13	13.3 6.03
2 - 2 7/16”	12TF39	12 304.8	28 711.2	24 3/4 628.7	26 3/4 679.5	4 1/2 114.3	3 76.2	4 101.6	3 5/16 84.1	9/16 14.3	11/16 17.5	15/16 23.8	1 25.4	1/4 6.4	5/8 16	18.3 8.30
	18TF39	18 457.2	34 863.6	30 3/4 781.1	32 3/4 831.9	4 1/2 114.3	3 76.2	4 101.6	3 5/16 84.1	9/16 14.3	11/16 17.5	15/16 23.8	1 25.4	1/4 6.4	5/8 16	21.20 9.62
2 1/4 - 2 7/16”	12TFS39	12 304.8	31 787.4	30 762	-	4 1/2 114.3	3 76.2	3 1/2 88.9	3 76.2	5/8 16	-	-	1 25.4	1/3 8.5	3/4 16	25.66 11.64
	18TFS39	18 457.2	37 939.8	36 914.4	-	4 1/2 114.3	3 76.2	3 1/2 88.9	3 76.2	5/8 16	-	-	1 25.4	1/3 8.5	3/4 16	29.18 13.24

Metric dimensions for reference only.
Not all parts are available from stock. Please contact customer service for availability (800) 626-2120.
For more information on bearing capabilities outside of our standard offering, please contact Application Engineering (800) 626-2093.

SEALMASTER® *Performance Mounted Ball Bearings*

NPG/SPG Design

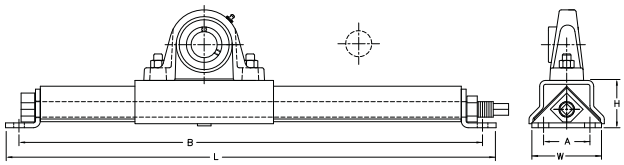

TF/TFS Design

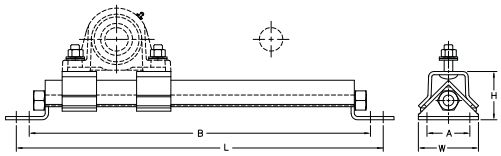

Table of Legacy Sealmaster Top Mount Take Up Frame to Replacement Frame

			Dimensions						Dimensions				
Old Assembly	Housing Only	Old Frame Only	A	B	H	L	W	Replacement Frame	A	B	H	L	W
NPG-14-6	NP-14	NPG 14 TO 16-6 DZW	2.50	18.00	2.31	19.50	3.75	6TF16	2.25	13.88	2.38	17.13	3.25
NPG-14-9		NPG 14 TO 16-9 DZW	2.50	21.00	2.31	22.50	3.75	9TF16	2.25	16.88	2.38	20.13	3.25
NPG-15-6	NP-15	NPG 14 TO 16-6 DZW	2.50	18.00	2.31	19.50	3.75	6TF16	2.25	13.88	2.38	17.13	3.25
NPG-15-9		NPG 14 TO 16-9 DZW	2.50	21.00	2.31	22.50	3.75	9TF16	2.25	16.88	2.38	20.13	3.25
NPG-16-6	NP-16	NPG 14 TO 16-6 DZW	2.50	18.00	2.31	19.50	3.75	6TF16	2.25	13.88	2.38	17.13	3.25
NPG-16-9		NPG 14 TO 16-9 DZW	2.50	21.00	2.31	22.50	3.75	9TF16	2.25	16.88	2.38	20.13	3.25
NPG-205-6	NP-205	NPG 14 TO 16-6 DZW	2.50	18.00	2.31	19.50	3.75	6TF16	2.25	13.88	2.38	17.13	3.25
NPG-205-9		NPG 14 TO 16-9 DZW	2.50	21.00	2.31	22.50	3.75	9TF16	2.25	16.88	2.38	20.13	3.25
NPG-18-6	NP-18	NPG 17 TO 19-6 DZW	2.50	19.00	2.31	20.50	3.75	6TF31	2.50	15.44	2.81	18.19	3.50
NPG-18-9		NPG 17 TO 19-9 DZW	2.50	22.00	2.31	23.50	3.75	9TF31	2.50	19.88	2.81	22.63	3.50
NPG19-6	NP-19	NPG 17 TO 19-6 DZW	2.5	19.00	2.31	20.50	3.75	6TF31	2.5	15.44	2.81	18.19	3.50
NPG19-9		NPG 17 TO 19-9 DZW	2.5	22.00	2.31	23.50	3.75	9TF31	2.5	19.88	2.81	22.63	3.50
NPG-206-6	NP-206	NPG 17 TO 19-6 DZW	2.50	19.00	2.31	20.50	3.75	6TF31	2.50	15.44	2.81	18.19	3.50
NPG-206-9		NPG 17 TO 19-9 DZW	2.50	22.00	2.31	23.50	3.75	9TF31	2.50	19.88	2.81	22.63	3.50
NPG-20-9	NP-20	NPG 20 TO 23-9 DZW	2.50	25.25	2.31	23.75	3.75	9TF31	2.50	19.88	2.81	22.63	3.50
NPG-20-12		NPG 20 TO 23-12 DZW	2.50	22.25	2.31	26.75	3.75	12TF31	2.50	21.44	2.81	24.19	3.50
NPG-22-9	NP-22	NPG 20 TO 23-9 DZW	2.50	25.25	2.31	23.75	3.75	9TF31	2.50	19.88	2.81	22.63	3.50
NPG-22-12		NPG 20 TO 23-12 DZW	2.50	22.25	2.31	26.75	3.75	12TF31	2.50	21.44	2.81	24.19	3.50
NPG-23-9	NP-23	NPG 20 TO 23-9 DZW	2.5	25.25	2.31	23.75	3.75	9TF31	2.50	19.88	2.81	22.63	3.50
NPG-23-12		NPG 20 TO 23-12 DZW	2.5	22.25	2.31	26.75	3.75	12TF31	2.50	21.44	2.81	24.19	3.50
NPG-207-9	NP-207	NPG 20 TO 23-9 DZW	2.50	25.25	2.31	23.75	3.75	9TF31	2.50	19.88	2.81	22.63	3.50
NPG-207-12		NPG 20 TO 23-12 DZW	2.50	22.25	2.31	26.75	3.75	12TF31	2.50	21.44	2.81	24.19	3.50
NPG-24-12	NP-24	NPG 24 TO 28-12 DZW	2.50	26.00	2.31	27.50	3.75	12TF31	2.50	21.44	2.81	21.19	3.50
NPG-24-18		NPG 24 TO 28-18 DZW	2.50	32.00	2.31	33.50	3.75	18TF31	2.50	28.88	2.81	31.63	3.50
NPG-25-12	NP-25	NPG 24 TO 28-12 DZW	2.50	26.00	2.31	27.50	3.75	12TF31	2.50	21.44	2.81	21.19	3.50
NPG-25-18		NPG 24 TO 28-18 DZW	2.50	32.00	2.31	33.50	3.75	18TF31	2.50	28.88	2.81	31.63	3.50
NPG-208-12	NP-208	NPG 24 TO 28-12 DZW	2.50	26.00	2.31	27.50	3.75	12TF31	2.50	21.44	2.81	21.19	3.50
NPG-208-18		NPG 24 TO 28-18 DZW	2.50	32.00	2.31	33.50	3.75	18TF31	2.50	28.88	2.81	31.63	3.50
NPG-26-12	NP-26	NPG 24 TO 28-12 DZW	2.50	26.00	2.31	27.50	3.75	12TF31	2.50	21.44	2.81	21.19	3.50
NPG-26-18		NPG 24 TO 28-18 DZW	2.50	32.00	2.31	33.50	3.75	18TF31	2.50	28.88	2.81	31.63	3.50
NPG-27-12	NP-27	NPG 24 TO 28-12 DZW	2.50	26.00	2.31	27.50	3.75	12TF31	2.50	21.44	2.81	21.19	3.50
NPG-27-18		NPG 24 TO 28-18 DZW	2.50	32.00	2.31	33.50	3.75	18TF31	2.50	28.88	2.81	31.63	3.50

Note: Housing must be ordered separately.

NPG/SPG Design

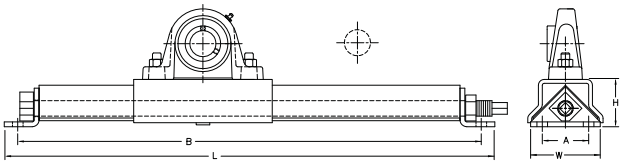

TF/TFS Design

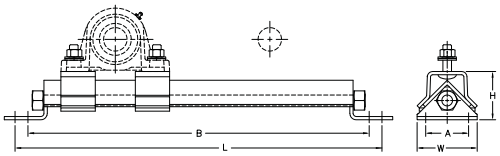

Table of Legacy Sealmaster Top Mount Take Up Frame to Replacement Frame

			Dimensions						Dimensions				
Old Assembly	Housing Only	Old Frame Only	A	B	H	L	W	Replacement Frame	A	B	H	L	W
NPG-28-12	NP-28	NPG 24 TO 28-12 DZW	2.50	26.00	2.31	27.50	3.75	12TF31	2.50	21.44	2.81	21.19	3.50
NPG-28-18		NPG 24 TO 28-18 DZW	2.50	32.00	2.31	33.50	3.75	18TF31	2.50	28.88	2.81	31.63	3.50
NPG-209-12	NP-209	NPG 24 TO 28-12 DZW	2.50	26.00	2.31	27.50	3.75	12TF31	2.50	21.44	2.81	21.19	3.50
NPG-209-18		NPG 24 TO 28-18 DZW	2.50	32.00	2.31	33.50	3.75	18TF31	2.50	28.88	2.81	31.63	3.50
NPG-30-12	NP-30	NPG 30 T0 31-12 DZW	2.50	24.00	2.31	28.25	3.75	12TF39	3.00	24.75	3.31	28.00	4.50
NPG-30-18		NPG 30 T0 31-18 DZW	2.50	30.00	2.31	34.25	3.75	18TF39	3.00	30.75	3.31	34.00	4.50
NPG-31-12	NP-31	NPG 30 T0 31-12 DZW	2.50	24.00	2.31	28.25	3.75	12TF39	3.00	24.75	3.31	28.00	4.50
NPG-31-18		NPG 30 T0 31-18 DZW	2.50	30.00	2.31	34.25	3.75	18TF39	3.00	30.75	3.31	34.00	4.50
NPG-210-12	NP-210	NPG 30 T0 31-12 DZW	2.50	24.00	2.31	28.25	3.75	12TF39	3.00	24.75	3.31	28.00	4.50
NPG-210-18		NPG 30 T0 31-18 DZW	2.50	30.00	2.31	34.25	3.75	18TF39	3.00	30.75	3.31	34.00	4.50
NPG-32-12	NP-32	NPG 32 TO 35-12 DZW	3.00	24.50	2.69	29.00	4.75	12TF39	3.00	24.75	3.31	28.00	4.50
NPG-32-18		NPG 32 TO 35-18 DZW	3.00	30.50	2.69	35.00	4.75	18TF39	3.00	30.75	3.31	34.00	4.50
NPG-34-12	NP-34	NPG 32 TO 35-12 DZW	3.00	24.50	2.69	29.00	4.75	12TF39	3.00	24.75	3.31	28.00	4.50
NPG-34-18		NPG 32 TO 35-18 DZW	3.00	30.50	2.69	35.00	4.75	18TF39	3.00	30.75	3.31	34.00	4.50
NPG-211-12	NP-211	NPG 32 TO 35-12 DZW	3.00	24.50	2.69	29.00	4.75	12TF39	3.00	24.75	3.31	28.00	4.50
NPG-211-18		NPG 32 TO 35-18 DZW	3.00	30.50	2.69	35.00	4.75	18TF39	3.00	30.75	3.31	34.00	4.50
NPG-35-12	NP-35	NPG 32 TO 35-12 DZW	3.00	24.50	2.69	29.00	4.75	12TF39	3.00	24.75	3.31	28.00	4.50
NPG-35-18		NPG 32 TO 35-18 DZW	3.00	30.50	2.69	35.00	4.75	18TF39	3.00	30.75	3.31	34.00	4.50
SPG-36-12	SP-36	SPG 36 TO 39-12 DZW	3.00	30.00	2.69	31.75	4.75	12TFS39	3.00	30.00	3.06	31.75	4.50
SPG-36-18		SPG 36 TO 39-18 DZW	3.00	36.00	2.69	37.75	4.75	18TFS39	3.00	36.00	3.06	37.75	4.50
SPG-38-12	SP-38	SPG 36 TO 39-12 DZW	3.00	30.00	2.69	31.75	4.75	12TFS39	3.00	30	3.06	31.75	4.50
SPG-38-18		SPG 36 TO 39-18 DZW	3.00	36.00	2.69	37.75	4.75	18TFS39	3.00	36	3.06	37.75	4.50
SPG-39-12	SP-39	SPG 36 TO 39-12 DZW	3.00	30.00	2.69	31.75	4.75	12TFS39	3.00	30	3.06	31.75	4.50
SPG-39-18		SPG 36 TO 39-18 DZW	3.00	36.00	2.69	37.75	4.75	18TFS39	3.00	36	3.06	37.75	4.50
SPG-212-12	SP-212	SPG 36 TO 39-12 DZW	3.00	30.00	2.69	31.75	4.75	12TFS39	3.00	30	3.06	31.75	4.50
SPG-212-18		SPG 36 TO 39-18 DZW	3.00	36.00	2.69	37.75	4.75	18TFS39	3.00	36	3.06	37.75	4.50

Note: Housing must be ordered separately.

SEALMASTER® Performance Mounted Ball Bearings

Duty: Standard
Rolling Elements: Ball
Housing: Ductile Iron Two Bolt Flange
Self Alignment: +/- 2 Degrees
Lock: Concentric
Lock: SKWEZLOC Locking Collar
Seal: Felt
Optional Seal: Contact
Temperature: -20° to 220°F

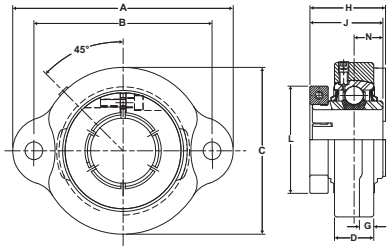

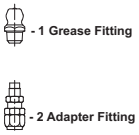

TFT-T Series Standard Duty Two-Bolt Flange Units - SKWEZLOC Locking Collar

Bore Diameter inch	Part No. Standard With Plug	Part No. With Grease Fitting	Part No. With Adapter Fitting	Part No.	Basic Dynamic Rating lb/N	Dimensions inch / mm A	B	C	D	H	K	L	N	Bolt Size	Unit Wt. lb/kg
15/16	TFT-15TC	TFT-15TC-1	TFT-15TC-2	2-015TC	2801	3 3/4	3	2 3/4	11/16	1 1/2	1 7/16	1 15/16	9/16	3/8	1.6
1	TFT-16TC	TFT-16TC-1	TFT-16TC-2	2-1TC	12459	95.3	76.2	69.9	17.5	38.1	36.5	49.2	14.3		0.73
1 1/8	TFT-18TC	TFT-18TC-1	TFT-18TC-2	2-12TC	4381	4 7/16	3 9/16	3 1/4	13/16	1 5/8	1 9/16	2 3/16	5/8	3/8	2.3
1 3/16	TFT-19TC	TFT-19TC-1	TFT-19TC-2	2-13TC	19487	112.7	90.5	82.6	20.6	41.3	39.7	55.6	15.9		1.04
1 1/4	TFT-20RT*	TFT-20RT*	TFT-20RT*	1-14T											
1 1/4	TFT-20TC	TFT-20TC-1	TFT-20TC-2	2-14TC	5782	4 7/8	3 15/16	3 11/16	7/8	1 13/16	1 3/4	2 7/16	11/16	3/8	3
					25718	123.8	100.0	93.7	22.2	46.0	44.5	61.9	17.5		1.36
1 3/8	TFT-22TC	TFT-22TC-1	TFT-22TC-2	2-16TC	5782	4 7/8	3 15/16	3 11/16	7/8	1 13/16	1 3/4	2 9/16	11/16	3/8	3
1 7/16	TFT-23TC	TFT-23TC-1	TFT-23TC-2	2-17TC	25718	123.8	100.0	93.7	22.2	46.0	44.5	65.1	17.5		1.36

For standard duty SKWEZLOC Locking Collar Bearing inserts, see page G-93.
*1 1/4 Reduced not available with contact seal, felt only.

Metric dimensions for reference only.
Not all parts are available from stock. Please contact customer service for availability (800) 626-2120.
For more information on bearing capabilities outside of our standard offering, please contact Application Engineering (800) 626-2093.

Performance Mounted Ball Bearings

SEALMASTER®

Duty: Light

Rolling Elements: Ball

Housing: Stamped Steel Rubber Mounted Flange

Lock: Setscrew

Seal: Felt

Optional Seal: Contact

Temperature: -20° to 220°F

Relube: No

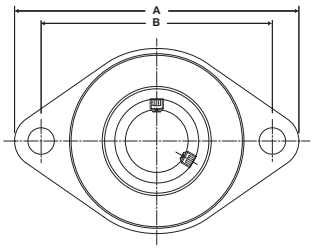

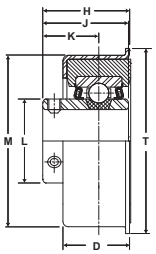

SRF Series Light Duty Rubber Mounted Flange Blocks - Setscrew Locking

Bore Diameter inch	Part No.	Bearing Insert No.	Max. Steady Radial Loads lb/N	Dimensions inch / mm A	B	D	H	J	K	M	T	Hole Size	Bolt Size	Unit Wt. lb/kg
1/2	SRF-8	SRC-8	400 1779	4 1/2 114.3	3 5/8 92.1	1 3/32 27.8	1 3/8 34.9	1 9/32 32.5	7/8 22.2	2 41/64 67.1	2 45/64 68.7	7/16 11.1	3/8	.75 .34
5/8	SRF-10	SRC-10												
3/4	SRF-12	SRC-12												
7/8	SRF-14	SRC-14	400 1779	4 1/2 114.3	3 5/8 92.1	1 3/32 27.8	1 3/8 34.9	1 3/8 34.9	7/8 22.2	2 41/64 67.1	2 45/64 68.7	7/16 11.1	3/8	.85 .39
15/16	SRF-15	SRC-15												
1	SRF-16	SRC-16												
1 1/8	SRF-18	SRC-18	600 2669	5 3/8 136.5	4 3/8 111.1	1 1/4 31.8	1 21/32 42.1	1 5/8 41.3	1 1/16 27.0	3 1/4 82.6	3 1/2 88.9	1/2 12.7	7/16	1.50 .68
1 3/16	SRF-19	SRC-19												
1 1/4	SRF-20R	SRC-20R												

Maximum steady radial load is based upon the housing strength and materials composition. Thrust load ratings 40% of radial loads..

SEALMASTER® Performance Mounted Ball Bearings

Duty: Light

Rolling Elements: Ball

Housing: Stamped Steel Rubber Mounted Pillow Block

Lock: Setscrew

Seal: Felt

Optional Seal: Contact

Temperature: -20° to 220°F

Relube: No

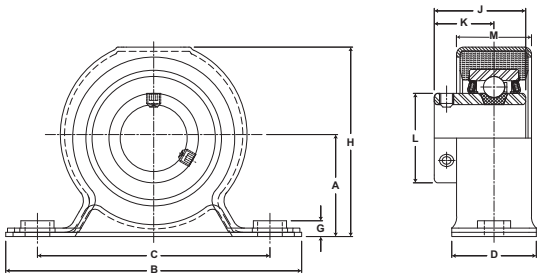

SRP Series Light Duty Rubber Mounted Pillow Blocks - Setscrew Locking

Bore Diameter inch	Part No.	Bearing Insert No.	Max. Steady Radial Loads lb/N	Dimensions inch / mm A	B	C	D	G	H	J	K	M	Hole Size	Bolt Size	Unit Wt. lb/kg
1/2	SRP-8	SRC-8	200 890	1 1/2 38.1	4 3/4 120.7	3 5/8 92.1	1 5/16 33.3	11/64 4.4	2 13/16 71.4	1 9/32 32.5	7/8 22.2	1 1/8 28.6	7/16 11.1	3/8	.85 .39
5/8	SRP-10	SRC-10													
3/4	SRP-12	SRC-12													
7/8	SRP-14	SRC-14	200 890	1 1/2 38.1	4 3/4 120.7	3 5/8 92.1	1 5/16 33.3	11/64 4.4	2 13/16 71.4	1 3/8 34.9	7/8 22.2	1 1/8 28.6	7/16 11.1	3/8	1 .45
15/16	SRP-15	SRC-15													
1	SRP-16	SRC-16													
1 1/8	SRP-18	SRC-18	300 1334	1 3/4 44.5	5 1/4 133.4	4 1/8 104.8	1 1/2 38.1	7/32 5.6	3 3/8 85.7	1 5/8 41.3	1 1/16 27.0	1 11/32 34.1	7/16 11.1	3/8	1.6 .73
1 3/16	SRP-19	SRC-19													
1 1/4	SRP-20R	SRC-20R													

Maximum steady radial load is based upon the housing strength and materials composition. Thrust load rating 40% of radial loads.

Metric dimensions for reference only.
Not all parts are available from stock. Please contact customer service for availability (800) 626-2120.
For more information on bearing capabilities outside of our standard offering, please contact Application Engineering (800) 626-2093.

Performance Mounted Ball Bearings

SEALMASTER®

Duty: Light
Rolling Elements: Ball
Housing: Rubber Mounted Insert
Lock: Setscrew
Seal: Felt
Optional Seal: Contact
Temperature: -20° to 220°F
Relube: No

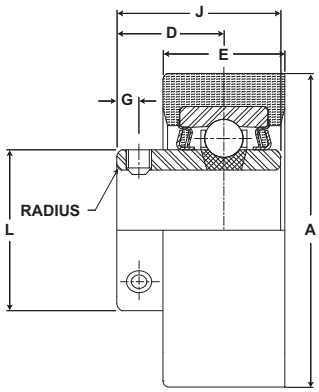

SRC Series Light Duty Rubber Mounted Cartridge Units - Setscrew Locking

Bore Diameter inch	Part No.	Bearing Insert No.	Max. Steady Radial Loads lb/N	Dimensions inch / mm A	D	E	G	L	J	Unit Wt. lb/kg
1/2	SRC-8	RB-8	200 890	2 17/32 64.3	7/8 22.2	1 25.4	3/16 4.8	1 3/16 30.2	1 9/32 32.5	.60 .27
5/8	SRC-10	RB-10								
3/4	SRC-12	RB-12								
7/8	SRC-14	RB-14	200 890	2 17/32 64.3	7/8 22.2	1 25.4	3/16 4.8	1 3/8 34.9	1 3/8 34.9	.65 .29
15/16	SRC-15	RB-15								
1	SRC-16	RB-16								
1 1/8	SRC-18	RB-18	300 1334	3 3/32 78.6	1 1/16 27.0	1 13/64 30.6	7/32 5.6	1 19/32 40.5	1 5/8 41.3	1.00 .45
1 3/16	SRC-19	RB-19								
1 1/4	SRC-20R	RB-20R								

Maximum steady radial load is based upon the housing strength and materials composition. Thrust load ratings 40% of radial loads.

SEALMASTER® Performance Mounted Ball Bearings

Duty: Light
Rolling Elements: Ball
Lock: Setscrew
Seal: Felt
Optional Seal: Contact
Temperature: -20° to 220°F
Relube: No

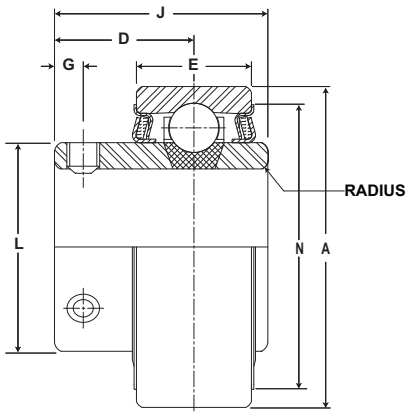

RB Series Bearing Assemblies

Bore Diameter inch	Part No.	Basic Dynamic Rating lb/N	Dimensions inch / mm A	D	E	G	J	L	N	Max. Rad. to Clear	Setscrew Thread	Unit Wt. lb/kg
1/2 5/8 3/4	RB-8 RB-10 RB-12	2611 11614	1.850 47.00	7/8 22.2	5/8 15.9	3/16 4.8	1 9/32 32.5	1 3/16 30.2	1 5/8 41.3	.040 1.02	1/4-28	.50 .23
7/8 15/16 1	RB-14 RB-15 RB-16	2801 12459	2.047 52.00	7/8 22.2	3/4 19.1	3/16 4.8	1 3/8 34.9	1 3/8 34.9	1 55/64 47.2	.040 1.02	1/4-28	.60 .27
1 1/8 1 3/16 1 1/4	RB-18 RB-19 RB-20R	4381 19487	2.441 62.00	1 1/16 27.0	7/8 22.2	7/32 5.6	1 5/8 41.3	1 9/32 32.5	1 19/32 40.5	.040 1.02	1/4-28	.90 .41

Outside diameter may be oversized due to seal press fit.
Metric dimensions for reference only.
Not all parts are available from stock. Please contact customer service for availability (800) 626-2120.
For more information on bearing capabilities outside of our standard offering, please contact Application Engineering (800) 626-2093.

Performance Mounted Ball Bearings

SEALMASTER®

Duty: Standard
Rolling Elements: Ball
Self Alignment: +/- 2 Degrees
Lock: Setscrew
Seal: Felt
Optional Seal: Contact
Temperature: -20° to 220°F

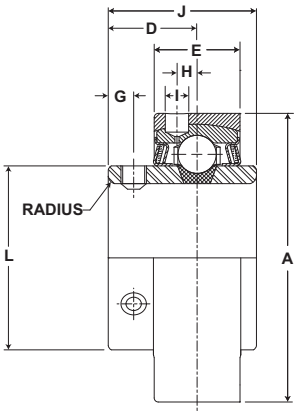

AR Series Standard Duty Expansion Insert - Setscrew Locking

Bore Diameter inch	Bore Diameter mm	Part No.	Bearing Insert No.	Basic Dynamic Rating lb/N	Dimensions inch / mm A +.000" -.005"	D	E	G	H	I	J	L	Max Rad. To Clear	Setscrew Thread	Unit Wt. lb/kg
1/2 9/16 5/8 11/16 3/4	20	AR-2-08 AR-2-09 AR-2-010 AR-2-011 AR-2-012 AR-204	2-08 2-09 2-010 2-011 2-012 5204	2611 11614	2.062 52.375	23/32 18.3	49/64 19.4	3/16 4.8	1/8 3.2	1/4 6.4	1 7/32 31.0	1 3/16 30.2	.040 1.02	1/4-28	.8 .36
13/16 7/8 15/16 1	25	AR-2-013 AR-2-014 AR-2-015 AR-2-1 AR-205	2-013 2-014 2-015 2-1 5205	2801 12459	2.272 57.709	13/16 20.6	49/64 19.4	7/32 5.6	11/64 4.4	1/4 6.4	1 3/8 34.9	1 3/8 34.9	.040 1.02	1/4-28	1.0 .45
1 1/16 1 1/8 1 3/16 1 1/4	30	AR-2-11 AR-2-12 AR-2-13 AR-1-14 AR-206	2-11 2-12 2-13 1-14 5206	4381 19487	2.687 68.250	7/8 22.2	61/64 24.2	7/32 5.6	7/32 5.6	1/4 6.4	1 1/2 38.1	1 19/32 40.5	.040 1.02	1/4-28	1.5 .68
1 1/4 1 5/16 1 3/8 1 7/16	35	AR-2-14 AR-2-15 AR-2-16 AR-2-17 AR-207	2-14 2-15 2-16 2-17 5207	5782 25718	3.140 79.756	1 25.4	1 1/64 25.8	1/4 6.4	1/4 6.4	1/4 6.4	1 11/16 42.9	1 55/64 47.2	.040 1.02	5/16-24	2.1 .95
1 1/2 1 9/16	40	AR-2-18 AR-2-19 AR-208	2-18 2-19 5208	7340 32648	3.375 85.725	1 3/16 30.2	1 11/64 29.8	5/16 7.9	19/64 7.5	1/4 6.4	1 15/16 49.2	2 1/16 52.4	.062 1.57	5/16-24	2.8 1.27
1 5/8 1 11/16 1 3/4	45	AR-2-110 AR-2-111 AR-2-112 AR-209	2-110 2-111 2-112 5209	7901 35144	3.562 90.475	1 3/16 30.2	1 11/64 29.8	5/16 7.9	19/64 7.5	1/4 6.4	1 15/16 49.2	2 19/64 58.3	.062 1.57	5/16-24	3 1.36
1 13/16 1 7/8 1 15/16 2	50	AR-2-113 AR-2-114 AR-2-115 AR-1-2 AR-210	2-113 2-114 2-115 1-2 5210	7889 35090	3.875 98.425	1 9/32 32.5	1 13/64 30.6	3/8 9.5	17/64 6.7	11/32 8.7	2 1/32 51.6	2 15/32 62.7	.062 1.57	3/8-24	3.5 1.59
2 2 1/8 2 3/16	55	AR-2-2 AR-2-22 AR-2-23 AR-211	2-2 2-22 2-23 5211	9752 43377	4.250 107.950	1 5/16 33.3	1 17/64 32.1	3/8 9.5	19/64 7.5	11/32 8.7	2 3/16 55.6	2 23/32 69.1	.080 2.03	3/8-24	4.4 2.00
2 1/4 2 3/8 2 7/16	60	AR-2-24 AR-2-26 AR-2-27 AR-212	2-24 2-26 2-27 5212	11789 52437	4.718 119.837	1 9/16 39.7	1 21/64 33.7	7/16 11.1	21/64 8.3	11/32 8.7	2 9/16 65.1	2 63/64 75.8	.080 2.03	3/8-24	5.8 2.63
2 11/16	70	AR-2-211 AR-214	2-211 5214	13971 62143	5.170 131.318	1 11/16 42.9	1 29/64 36.9	7/16 11.1	3/8 9.5	11/32 8.7	2 3/4 69.9	3 7/16 87.3	.080 2.03	7/16-20	9.3 4.22
2 7/8 2 15/16	75	AR-2-214 AR-2-215 AR-215	2-214 2-215 5215	14839 66004	5.375 136.525	1 3/4 44.5	1 37/64 40.1	7/16 11.1	3/8 9.5	11/32 8.7	3 1/16 77.8	3 41/64 92.5	.080 2.03	7/16-20	9.6 4.35
3 3/16 3.150	80	AR-2-33 AR-216	2-33 5216	17412 77449	5.875 149.225	1 15/16 49.2	1 53/64 46.4	17/32 13.5	13/32 10.3	15/32 11.9	3 1/4 82.6	3 59/64 99.6	.120 3.0	7/16-20	12.2 5.53
3 1/4 3 3/8 3 7/16		AR-2-34 AR-2-36 AR-2-37	2-34 2-36 2-37	18681 83093	6.280 159.512	2 1/32 51.6	2 5/64 52.8	15/32 11.9	17/32 13.5	15/32 11.9	3 3/8 85.7	4 5/32 105.6	.120 3.05	7/16-20	15.2 6.89
3 1/2	90	AR-2-38 AR-218	2-38 5218	21566 95926	6.750 171.450	2 7/32 56.4	2 9/64 54.4	5/8 15.9	15/32 11.9	15/32 11.9	3 25/32 96.0	4 25/64 111.5	.120 3.05	1/2-20	18.5 8.39

For Standard Duty Bearing Inserts - Single Lock see page G-92.

SEALMASTER® Performance Mounted Ball Bearings

Duty: Standard
Rolling Elements: Ball
Self Alignment: +/- 2 Degrees
Lock: SKWEZLOC Locking Collar
Seal: Felt
Optional Seal: Contact
Temperature: -20° to 220°F

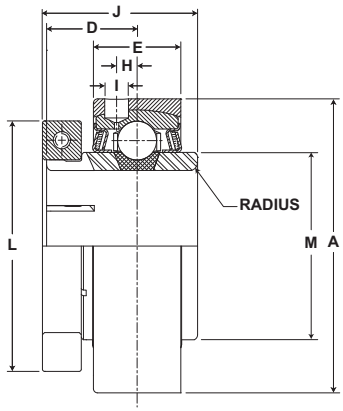

AR-T Standard Duty Expansion Insert - SKWEZLOC Locking Collar - Inch

Bore Diameter inch	Part No.	Bearing Insert No.	Basic Dynamic Rating lb/N	Dimensions inch / mm A +.000" -.005"	D	E	H	I	J	L	M	Max Rad. To Clear	Torx Cap Screw	Unit Wt. lb/kg
3/4	AR-2-012T	2-012T	2611 11614	2.0620 52.375	25/32 22.8	49/64 19.4	9/64 3.6	1/4 6.4	1 9/32 35.5	1 3/4 44.5	1 3/16 30.2	.040 1.02	T-25	.9 .41
15/16 1	AR-2-015T AR-2-1T	2-015T 2-1T	2801 12459	2.2720 57.709	7/8 22.2	49/64 19.4	11/64 4.4	1/4 6.4	1 7/16 36.5	1 15/16 49.2	1 3/8 34.9	.040 1.02	T-25	1.2 .54
1 1/8	AR-2-12T	2-12T	4381 19487	2.6870 68.250	15/16 22.8	61/64 24.2	7/32 5.6	1/4 6.4	1 9/16 35.5	2 3/16 55.6	1 19/32 40.5	.040 1.02	T-25	1.7 .77
1 1/4	AR-2-14T	2-14T	5782 25718	3.1400 79.756	1 1/16 27.0	1 1/64 25.8	1/4 6.4	1/4 6.4	1 3/4 44.5	2 7/16 61.9	1 55/64 47.2	.040 1.02	T-27	2.4 1.09
1 3/8 1 7/16	AR-2-16T AR-2-17T	2-16T 2-17T	5782 25718	3.1400 79.756	1 1/16 27.0	1 1/64 25.8	1/4 6.4	1/4 6.4	1 3/4 44.5	2 9/16 65.1	1 55/64 47.2	.040 1.02	T-27	2.4 1.09
1 1/2	AR-2-18T	2-18T	7340 32648	3.3750 85.725	1 1/4 31.8	1 11/64 29.8	19/64 7.5	1/4 6.4	2 50.8	2 11/16 68.3	2 1/16 52.4	.062 1.57	T-27	3.1 1.41
1 5/8	AR-2-110T	2-110T	7901 35144	3.5620 90.475	1 1/4 31.8	1 11/64 29.8	19/64 7.5	1/4 6.4	2 50.8	2 13/16 71.4	2 19/64 58.3	.062 1.57	T-27	3.3 1.50
1 11/16 1 3/4	AR-2-111T AR-2-112T	2-111T 2-112T	7901 35144	3.5620 90.475	1 1/4 31.8	1 11/64 29.8	19/64 7.5	1/4 6.4	2 50.8	2 15/16 74.6	2 19/64 58.3	.062 1.57	T-27	3.3 1.50
1 15/16	AR-2-115T	2-115T	7889 35090	3.8750 98.425	1 11/32 34.1	1 13/64 30.6	17/64 6.7	11/32 8.7	2 3/32 53.2	3 3/8 85.7	2 15/32 62.7	.062 1.57	T-30	4.1 1.86
2	AR-2-2T	2-2T	9752 43377	4.2500 107.950	1 3/8 34.9	1 17/64 32.1	19/64 7.5	11/32 8.7	2 1/4 57.2	3 1/2 88.9	2 23/32 69.1	.080 2.03	T-30	5.0 2.27
2 3/16	AR-2-23T AR-211TMC	2-23T 5211TMC	9752 43377	4.2500 107.950	1 3/8 34.9	1 17/64 32.1	19/64 7.5	11/32 8.7	2 1/4 57.2	3 5/8 92.1	2 23/32 69.1	.080 2.03	T-30	5.0 2.27
2 1/4	AR-2-24T	2-24T	11789 52437	4.7190 119.863	1 5/8 41.3	1 21/64 33.7	21/64 8.3	11/32 8.7	2 5/8 66.7	4 1/16 103.2	2 63/64 75.8	.080 2.03	T-45	7.0 3.18
2 3/8 2 7/16	AR-2-26T AR-2-27T	2-26T 2-27T	11789 52437	4.7190 119.863	1 5/8 41.3	1 21/64 33.7	21/64 8.3	11/32 8.7	2 5/8 66.7	4 1/8 104.8	2 63/64 75.8	.080 2.03	T-45	7.0 3.18

AR-T Standard Duty Expansion Insert - Metric - SKWEZ™

Bore Diameter mm	Part No.	Bearing Insert No.	Basic Dynamic Rating lb/N	Dimensions mm / inch A +.000mm -.125mm	D	E	H	I	J	L	M	Max Rad. To Clear	Torx Cap Screw	Unit Wt. kg/lb
20	AR-204TMC	5204TMC	11614 2611	52.375 2.0620	22.8 25/32	19.4 49/64	3.6 9/64	6.4 1/4	35.5 1 9/32	44.5 1 3/4	30.2 1 3/16	1.02 .040	T-25	.41 .9
25	AR-205TMC	5205TMC	12459 2801	57.709 2.2720	22.2 7/8	19.4 49/64	4.4 11/64	6.4 1/4	36.5 1 7/16	49.2 1 15/16	34.9 1 3/8	1.02 .040	T-25	.54 1.2
30	AR-206TMC	5206TMC	19487 4381	68.250 2.6870	22.8 15/16	24.2 61/64	5.6 7/32	6.4 1/4	35.5 1 9/16	55.6 2 3/16	40.5 1 19/32	1.02 .040	T-25	.77 1.7
35	AR-207TMC	5207TMC	25718 5782	79.756 3.1400	27.0 1 1/16	25.8 1 1/64	6.4 1/4	6.4 1/4	44.5 1 3/4	65.1 2 9/16	47.2 1 55/64	1.02 .040	T-27	1.09 2.4
40	AR-208TMC	5208TMC	32648 7340	85.725 3.3750	31.8 1 1/4	29.8 1 11/64	7.5 19/64	6.4 1/4	50.8 2	68.3 2 11/16	52.4 2 1/16	1.57 .062	T-27	1.41 3.1
45	AR-209TMC	5209TMC	35144 7901	90.475 3.5620	31.8 1 1/4	29.8 1 11/64	7.5 19/64	6.4 1/4	50.8 2	74.6 2 15/16	58.3 2 19/64	1.57 .062	T-27	1.50 3.3
50	AR-210TMC	5210TMC	35090 7889	98.425 3.8750	34.1 1 11/32	30.6 1 13/64	6.7 17/64	8.7 11/32	53.2 2 3/32	85.7 3 3/8	62.7 2 15/32	1.57 .062	T-30	1.86 4.1
55	AR-211TMC	5211TMC	43377 9752	107.950 4.2500	34.9 1 3/8	32.1 1 17/64	7.5 19/64	8.7 11/32	57.2 2 1/4	92.1 3 5/8	69.1 2 23/32	2.03 .080	T-30	2.27 5.0
60	AR-212TMC	5212TMC	52437 11789	119.863 4.7190	41.3 1 5/8	33.7 1 21/64	8.3 21/64	8.7 11/32	66.7 2 5/8	104.8 4 1/8	75.8 2 63/64	2.03 .080	T-45	3.18 7.0

For Standard Duty Bearing Inserts - SKWEZLOC Locking collar see page G-93. For Replacement Lock Collar see page G-98.

Performance Mounted Ball Bearings

SEALMASTER®

Duty: Medium
Rolling Elements: Ball
Self Alignment: +/- 2 Degrees
Lock: Setscrew
Seal: Felt
Optional Seal: Contact
Temperature: -20° to 220°F

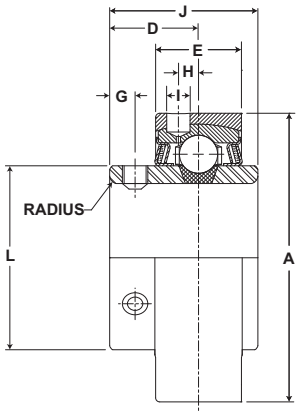

AR Series Medium Duty Expansion Insert - Setscrew Locking

Bore Diameter inch	Bore Diameter mm	Part No.	Bearing Insert No.	Basic Dynamic Rating lb/N	Dimensions inch / mm A +.000" -.005"	D	E	G	H	I	J	L	Max Rad. To Clear	Setscrew Thread	Unit Wt. lb/kg
15/16 1	25	AR-3-015 AR-3-1 AR-305	3-015 3-1 5305	4381 19487	2.687 68.250	7/8 22.2	61/64 24.2	7/32 5.6	7/32 5.6	1/4 6.4	1 1/2 38.1	1 19/32 40.5	.040 1.02	1/4-28	1.5 .68
1 3/16	30	AR-3-13 AR-306	3-13 5306	5782 25718	3.14 79.756	1 25.4	1 1/64 25.8	1/4 6.4	1/4 6.4	1/4 6.4	1 11/16 42.9	1 55/64 47.2	.040 1.02	5/16-24	2.1 .95
1 7/16	35	AR-3-17 AR-307	3-17 5307	7340 32648	3.375 85.725	1 3/16 30.2	1 11/64 29.8	5/16 7.9	19/64 7.5	1/4 6.4	1 15/16 49.2	2 1/16 52.4	.062 1.57	5/16-24	2.8 1.27
1 1/2	40	AR-3-18 AR-308	3-18 5308	7901 35144	3.562 90.475	1 3/16 30.2	1 11/64 29.8	5/16 7.9	19/64 7.5	1/4 6.4	1 15/16 49.2	2 19/64 58.3	.062 1.57	5/16-24	3 1.36
1 11/16 1 3/4	45	AR-3-111 AR-3-112 AR-309	3-111 3-112 5309	7889 35090	3.875 98.425	1 9/32 32.5	1 13/64 30.6	3/8 9.5	17/64 6.7	11/32 8.7	2 1/32 51.6	2 15/32 62.7	.062 1.57	3/8-24	3.5 1.59
1 15/16	50	AR-3-115 AR-310	3-115 5310	9752 43377	4.25 107.950	1 5/16 33.3	1 17/64 32.1	3/8 9.5	19/64 7.5	11/32 8.7	2 3/16 55.6	2 23/32 69.1	.080 2.03	3/8-24	4.4 2.00
2 3/16	55	AR-3-23 AR-311	3-23 5311	11789 52437	4.718 119.837	1 9/16 39.7	1 21/64 33.7	7/16 11.1	21/64 8.3	11/32 8.7	2 9/16 65.1	2 63/64 75.8	.080 2.03	3/8-24	5.8 2.63
2 7/16 2 1/2	65	AR-3-27 AR-3-28 AR-313	3-27 3-28 5313	13971 62143	5.17 131.318	1 11/16 42.9	1 29/64 36.9	7/16 11.1	3/8 9.5	11/32 8.7	2 3/4 69.9	3 7/16 87.3	.080 2.03	7/16-20	9.3 4.22
2 11/16	70	AR-3-211 AR-314	3-211 5314	14839 66004	5.375 136.525	1 3/4 44.5	1 37/64 40.1	7/16 11.1	3/8 9.5	11/32 8.7	3 1/16 77.8	3 41/64 92.5	.080 2.03	7/16-20	9.6 4.35
2 15/16 3	75	AR-3-215 AR-3-3 AR-315	3-215 3-3 5315	17412 77449	5.875 149.225	1 15/16 49.2	1 53/64 46.4	17/32 13.5	13/32 10.3	15/32 11.9	3 1/4 82.6	3 59/64 99.6	.120 3.05	7/16-20	12.2 5.53
3 3/16	80	AR-3-33 AR-316	3-33 5316	18681 83093	6.28 159.512	2 1/32 51.6	2 5/64 52.8	15/32 11.9	17/32 13.5	15/32 11.9	3 3/8 85.7	4 5/32 105.6	.120 3.05	7/16-20	15.2 6.89
3 7/16		AR-3-37	3-37	21566 95926	6.75 171.450	2 7/32 56.4	2 9/64 54.4	5/8 15.9	15/32 11.9	15/32 11.9	3 25/32 96.0	4 25/64 111.5	.120 3.05	1/2-20	18.5 8.39
3 15/16 4	100	AR-3-315 AR-3-4 AR-320	3-5315 3-4 320	29905 133017	8.063 204.800	2 11/16 68.3	2 33/64 63.9	3/4 19.1	19/32 15.1	15/32 11.9	4 5/8 117.5	5 11/64 131.4	.120 3.05	5/8-18	32.9 14.92

For Medium Duty Bearing Inserts - Single Lock see page G-95.

SEALMASTER® Performance Mounted Ball Bearings

Duty: Medium
Rolling Elements: Ball
Housing: Brass Expansion Insert
Self Alignment: +/- 2 Degrees
Lock: SKWEZLOC Locking Collar
Seal: Felt
Optional Seal: Contact
Temperature: -20° to 220°F

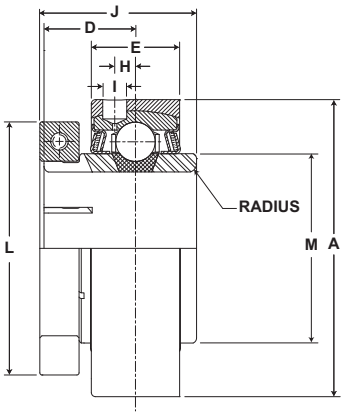

AR-T Medium Duty Expansion Insert - SKWEZLOC Locking Collar

Bore Diameter inch	Part No.	Bearing Insert No.	Basic Dynamic Rating lb/N	Dimensions inch / mm A +.000" -.005"	D	E	H	I	J	L	M	Max Rad. To Clear	Torx Cap Screw	Unit Wt. lb/kg
1	AR-3-1T	3-1T	4381 19487	2.687 68.250	15/16 23.8	61/64 24.2	7/32 5.6	1/4 6.4	1 9/16 39.7	2 1/16 52.4	1 19/32 40.5	.040 1.02	T-25	1.7 .77
1 1/4	AR-2-14T	2-14T	5782 25718	3.14 79.756	1 1/16 27.0	1 25.4	1/4 6.4	1/4 6.4	1 3/4 44.5	2 7/16 61.9	1 27/32 46.8	.040 1.02	T-27	2.4 1.09
1 7/16	AR-3-17T	3-17T	7340 32648	3.375 85.725	1 1/4 31.8	1 11/64 29.8	19/64 7.5	1/4 6.4	2 50.8	2 11/16 68.3	2 1/16 52.4	.062 1.57	T-27	3.1 1.41
1 1/2	AR-3-18T	3-18T	7901 35144	3.562 90.475	1 1/4 31.8	1 11/64 29.8	19/64 7.5	1/4 6.4	2 50.8	2 13/16 71.4	2 5/16 58.7	.062 1.57	T-27	3.3 1.50
1 11/16 1 3/4	AR-3-111T AR-3-112T	3-111T 3-112T	7889 35090	3.875 98.425	1 11/32 34.1	1 13/64 30.6	17/64 6.7	11/32 8.7	2 3/32 53.2	3 1/4 82.6	2 15/32 62.7	.062 1.57	T-30	4.1 1.86
1 15/16	AR-3-115T	2-115T	7889 35090	4.25 107.950	1 3/8 34.9	1 17/64 32.1	19/64 7.5	11/32 8.7	2 1/4 57.2	3 1/2 88.9	2 23/32 69.1	.080 2.03	T-30	5.0 2.27
2 3/16	AR-3-23T	3-23T	11789 52437	4.719 119.863	1 5/8 41.3	1 21/64 33.7	21/64 8.3	11/32 8.7	2 5/8 66.7	4 1/16 103.2	2 63/64 75.8	.080 2.03	T-45	7.0 3.18

For Medium Duty SKWEZLOC Locking Collar Bearing inserts see page G-96. For Replacement Lock Collar see page G-98.

Metric dimensions for reference only.
Not all parts are available from stock. Please contact customer service for availability (800) 626-2120.
For more information on bearing capabilities outside of our standard offering, please contact Application Engineering (800) 626-2093.

Performance Mounted Ball Bearings

SEALMASTER®

Duty: Standard
Rolling Elements: Ball
Lock: Setscrew
Seal: Felt
Optional Seal: Contact
Temperature: -20° to 220°F

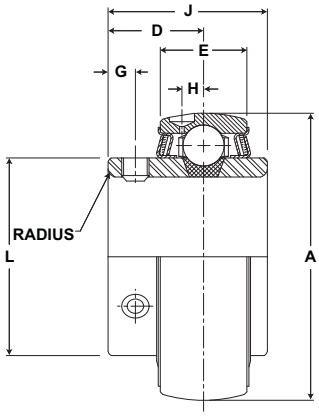

Standard Duty Bearing Insert – Setscrew

Bore Diameter inch	Bore Diameter mm	Part No.	Basic Dynamic Rating lb/N	Dimensions inch / mm A	D	E	G	H	J	L	Max Rad. To Clear	Setscrew Thread	Unit Wt. lb/kg
1/2 9/16 5/8 11/16 3/4	20	2-08 2-09 2-010 2-011 2-012 5204	2611 11614	1.8504 47	23/32 18.3	5/8 15.9	3/16 4.8	1/8 3.2	1 7/32 31.0	1 3/16 30.2	.040 1.02	1/4-28	.5 .23
13/16 7/8 15/16 1	25	2-013 2-014 2-015 2-1 5205	2801 12459	2.0472 52	13/16 20.6	11/16 17.5	7/32 5.6	11/64 4.4	1 3/8 34.9	1 3/8 34.9	.040 1.02	1/4-28	.6 .27
1 1/16 1 1/8 1 3/16 1 1/4	30	2-11 2-12 2-13 1-14 5206	4381 19487	2.4409 62	7/8 22.2	7/8 22.2	7/32 5.6	7/32 5.6	1 1/2 38.1	1 19/32 40.5	.040 1.02	1/4-28	1.0 .45
1 1/4 1 5/16 1 3/8 1 7/16	35	2-14 2-15 2-16 2-17 5207	5782 25718	2.8316 72	1 25.4	15/16 23.8	1/4 6.4	1/4 6.4	1 11/16 42.9	1 55/64 47.2	.040 1.02	5/16-24	1.5 .68
1 1/2 1 9/16	40	2-18 2-19 5208	7340 32648	3.1490 80	1 3/16 30.2	1 3/32 27.8	5/16 7.9	19/64 7.5	1 15/16 49.2	2 1/16 52.4	.062 1.57	5/16-24	1.9 .86
1 5/8 1 11/16 1 3/4	45	2-110 2-111 2-112 5209	7901 35144	3.3465 85	1 3/16 30.2	1 3/32 27.8	5/16 7.9	19/64 7.5	1 15/16 49.2	2 19/64 58.3	.062 1.57	5/16-24	2.2 1.00
1 13/16 1 7/8 1 15/16 2	50	2-113 2-114 2-115 1-2 5210	7889 35090	3.5433 90	1 9/32 32.5	1 1/8 28.6	3/8 9.5	17/64 6.7	2 1/32 51.6	2 15/32 62.7	.062 1.57	3/8-24	2.4 1.09
2 2 1/8 2 3/16	55	2-2 2-22 2-23 5211	9752 43377	3.9370 100	1 5/16 33.3	1 3/16 30.2	3/8 9.5	19/64 7.5	2 3/16 55.6	2 23/32 69.1	.080 2.03	3/8-24	2.8 1.27
2 1/4 2 3/8 2 7/16	60	2-24 2-26 2-27 5212	11789 52437	4.3307 110	1 9/16 39.7	1 1/4 31.8	7/16 11.1	21/64 8.3	2 9/16 65.1	2 63/64 75.8	.080 2.03	3/8-24	3.7 1.68
2 11/16	70	2-211 5214	13971 62143	4.9213 125	1 11/16 42.9	1 3/8 34.9	7/16 11.1	3/8 9.5	2 3/4 69.9	3 7/16 87.3	.080 2.03	7/16-20	5.45 2.47
2 7/8 2 15/16	75	2-214 2-215 5215	14839 66004	5.1181 130	1 3/4 44.5	1 1/2 38.1	7/16 11.1	3/8 9.5	3 1/16 77.8	3 41/64 92.5	.080 2.03	7/16-20	6.8 3.08
3 3/16	80	2-33 5216	17412 77449	5.5118 140	1 15/16 49.2	1 11/16 42.9	17/32 13.5	13/32 10.3	3 1/4 82.6	3 59/64 99.6	.120 3.05	7/16-20	7.2 3.27
3 1/4 3 3/8 3 7/16		2-34 2-36 2-37	18681 83093	5.9055 150	2 1/32 51.6	1 15/16 49.2	15/32 11.9	17/32 13.5	3 3/8 85.7	4 5/32 105.6	.120 3.05	7/16-20	9.3 4.22
3 1/2	90	2-38 5218	21566 95926	6.2992 160	2 7/32 56.4	2 50.8	5/8 15.9	15/32 11.9	3 25/32 96.0	4 25/64 111.5	.120 3.05	1/2-20	11.7 5.31

SEALMASTER® Performance Mounted Ball Bearings

Duty: Standard
Rolling Elements: Ball
Lock: SKWEZLOC Locking Collar
Seal: Felt
Optional Seal: Contact
Temperature: -20° to 220°F

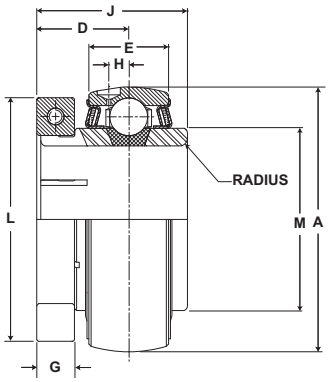

Standard Duty Bearing Insert – SKWEZLOC Locking Collar

Bore Diameter inch	Bore Diameter mm	Part No.	Basic Dynamic Rating lb/N	Dimensions inch / mm A	D	E	G	H	J	L	M	Max Rad. To Clear	Torx Cap Screw	Unit Wt. lb/kg
3/4	20	2-012T 5204TMC	2611 11614	1.8504 47	23/32 18.3	5/8 15.9	3/8 9.5	9/64 3.6	1 9/32 32.5	1 3/4 44.5	1 3/16 30.2	.040 1.02	T-25	.60 .27
15/16 1	25	2-015T 2-1T 5205TMC	2801 12459	2.0472 52	13/16 20.6	11/16 17.5	3/8 9.5	11/64 4.4	1 7/16 36.5	1 15/16 49.2	1 3/8 34.9	.040 1.02	T-25	.80 .36
1 1/8 1 3/16 1 1/4	30	2-12T 2-13T 1-14T 5206TMC	4381 19487	2.4409 62	7/8 22.2	7/8 22.2	3/8 9.5	7/32 5.6	1 9/16 39.7	2 3/16 55.6	1 19/32 40.5	.040 1.02	T-25	1.2 .54
1 1/4		2-14T	5782 25718	2.8346 72	1 25.4	15/16 23.8	7/16 11.1	1/4 6.4	1 3/4 44.5	2 7/16 61.9	1 55/64 47.2	.040 1.02	T-27	1.8 .82
1 3/8 1 7/16	35	2-16T 2-17T 5207TMC	5782 25718	2.8346 72	1 25.4	15/16 23.8	7/16 11.1	1/4 6.4	1 3/4 44.5	2 9/16 65.1	1 55/64 47.2	.040 1.02	T-27	1.8 .82
1 1/2 1 9/16	40	2-18T 2-19T 5208TMC	7340 32648	3.1496 80	1 3/16 30.2	1 3/32 27.8	7/16 11.1	19/64 7.5	2 50.8	2 11/16 68.3	2 1/16 52.4	.062 1.57	T-27	2.2 1.00
1 5/8		2-110T	7901 35144	3.3465 85	1 3/16 30.2	1 3/32 27.8	7/16 11.1	19/64 7.5	2 50.8	2 13/16 71.4	2 19/64 58.3	.062 1.57	T-27	2.5 1.13
1 11/16 1 3/4	45	2-111T 2-112T 5209TMC	7901 35144	3.3465 85	1 3/16 30.2	1 3/32 27.8	7/16 11.1	19/64 7.5	2 50.8	2 15/16 74.6	2 19/64 58.3	.062 1.57	T-27	2.5 1.13
1 15/16 2	50	2-115T 1-2T 5210TMC	7889 35090	3.5433 90	1 9/32 32.5	1 1/8 28.6	9/16 14.3	17/64 6.7	2 3/32 53.2	3 3/8 85.7	2 15/32 62.7	.062 1.57	T-30	3.0 1.36
2		2-2T	9752 43377	3.9370 100	1 5/16 33.3	1 3/16 30.2	9/16 14.3	19/64 7.5	2 1/4 57.2	3 1/2 88.9	2 23/32 69.1	.080 2.03	T-30	3.4 1.54
2 1/8 2 3/16	55	2-22T 2-23T 5211TMC	9752 43377	3.9370 100	1 5/16 33.3	1 3/16 30.2	9/16 14.3	19/64 7.5	2 1/4 57.2	3 5/8 92.1	2 23/32 69.1	.080 2.03	T-30	3.4 1.54
2 1/4		2-24T	11789 52437	4.3307 110	1 9/16 39.7	1 1/4 31.8	11/16 17.5	21/64 8.3	2 5/8 66.7	4 1/16 103.2	2 63/64 75.8	.080 2.03	T-45	4.9 2.22
2 3/8 2 7/16	60	2-26T 2-27T 5212TMC	11789 52437	4.3307 110	1 9/16 39.7	1 1/4 31.8	11/16 17.5	21/64 8.3	2 5/8 66.7	4 1/8 104.8	2 63/64 75.8	.080 2.03	T-45	4.9 2.22

For Replacement Lock Collar see page G-98.

Metric dimensions for reference only.
Not all parts are available from stock. Please contact customer service for availability (800) 626-2120.
For more information on bearing capabilities outside of our standard offering, please contact Application Engineering (800) 626-2093.

Performance Mounted Ball Bearings

SEALMASTER®

Duty: Standard
Rolling Elements: Ball
Lock: Double Setscrew
Seal: Felt
Optional Seal: Contact
Temperature: -20° to 220°F

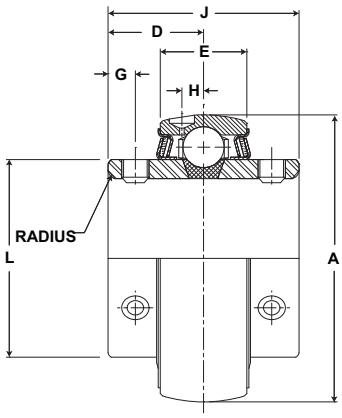

Standard Duty Bearing Insert – Double Setscrew

Bore Diameter inch	Bearing Insert No.	Basic Dynamic Rating lb/N	Dimensions inch / mm A	D	E	G	H	J	L	Max Rad. To Clear	Setscrew Thread	Unit Wt. lb/kg
7/8 15/16 1	2-014D 2-015D 2-1D	2801 12459	2.0472 52	3/4 19.1	11/16 17.5	7/32 5.6	11/64 4.4	1 1/2 38	1 3/8 34.9	.040 1.02	1/4-28	.6 .27
1 3/16	2-13D	4381 19487	2.4409 62	7/8 22.2	7/8 22.2	7/32 5.6	7/32 5.6	1 3/4 44	1 19/32 40.5	.040 1.02	1/4-28	1.0 .45
1 1/4 1 3/8 1 7/16	2-14D 2-16D 2-17D	5782 25718	2.8346 72	1 25.4	15/16 23.8	1/4 6.4	1/4 6.4	2 51	1 55/64 47.2	.040 1.02	5/16-24	1.5 .68
1 1/2 1 9/16	2-18D 2-19D	7340 32648	3.1496 80	1 5/32 29.4	1 3/32 27.8	5/16 7.9	19/64 7.5	2 5/16 59	2 1/16 52.4	.062 1.57	5/16-24	1.9 .86
1 11/16 1 3/4	2-111D 2-112D	7901 35144	3.3465 85	1 3/16 30.2	1 3/32 27.8	11/32 8.7	19/64 7.5	2 3/8 60	2 19/64 58.3	.062 1.57	5/16-24	2.2 1.00
1 7/8 1 15/16	2-114D 2-115D	7889 35090	3.5433 90	1 1/4 31.8	1 1/8 28.6	11/32 8.7	17/64 6.7	2 1/2 64	2 15/32 62.7	.062 1.57	3/8-24	2.4 1.09
2 2 1/8 2 3/16	2-2D 2-22D 2-23D	9752 43377	3.9370 100	1 5/16 33.3	1 3/16 30.2	5/16 7.9	19/64 7.5	2 5/8 67	2 23/32 69.1	.080 2.03	3/8-24	2.8 1.27
2 1/4 2 3/8 2 7/16	2-24D 2-26D 2-27D	11789 52437	4.3307 110	1 9/16 39.7	1 1/4 31.8	13/32 10.3	21/64 8.3	3 1/8 79	2 63/64 75.8	.080 2.03	3/8-24	3.7 1.68
2 11/16	2-211D	13971 62143	4.9213 125	1 3/4 44.5	1 3/8 34.9	15/32 11.9	3/8 9.5	3 1/2 89	3 7/16 87.3	.080 2.03	7/16-20	5.8 2.63
2 7/8 2 15/16	2-214D 2-215D	14839 66004	5.1181 130	1 3/4 44.5	1 1/2 38.1	7/16 11.1	3/8 9.5	3 1/2 89	3 41/64 92.5	.080 2.03	7/16-20	6.8 3.08
3 3/16	2-33D	17412 77449	5.5118 140	1 15/16 49.2	1 11/16 42.9	9/16 14.3	13/32 10.3	3 7/8 98	3 59/64 99.6	.120 3.05	7/16-20	7.2 3.27
3 1/4 3 3/8 3 7/16	2-34D 2-36D 2-37D	18681 83093	5.9055 150	2 1/32 51.6	1 15/16 49.2	1/2 12.7	17/32 13.5	4 1/16 103	4 5/32 105.6	.120 3.05	7/16-20	9.3 4.22
3 1/2	2-38D	21566 95926	6.2992 160	2 7/32 56.4	2 50.8	1/2 12.7	15/32 11.9	4 7/16 113	4 25/64 111.5	.120 3.05	1/2-20	11.7 5.31

SEALMASTER® Performance Mounted Ball Bearings

Duty: Medium
Rolling Elements: Ball
Lock: Setscrew
Seal: Felt
Optional Seal: Contact
Temperature: -20° to 220°F

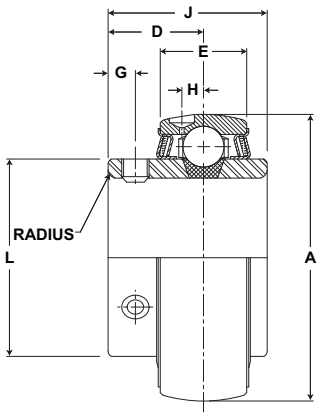

Medium Duty Bearing Insert – Setscrew

Bore Diameter		Bearing Insert No.	Basic Dynamic Rating lb/N	Dimensions inch / mm							Max Rad. To Clear	Setscrew Thread	Unit Wt. lb/kg
inch	mm			A	J	D	E	L	G	H			
15/16 1	25	3-015 3-1 5305	4381 19487	2.4409 62	1 1/2 38.1	7/8 22.2	7/8 22.2	1 19/32 40.5	7/32 5.6	7/32 5.6	.040 1.02	1/4-28	1.0 .45
1 3/16 1.181	30	3-13 5306	5782 25718	2.8346 72	1 11/16 42.9	1 25.4	15/16 23.8	1 55/64 47.2	1/4 6.4	1/4 6.4	.040 1.02	5/16-24	1.5 .68
1 7/16	35	3-17 5307	7340 32648	3.1496 80	1 15/16 49.2	1 3/16 30.2	1 3/32 27.8	2 1/16 52.4	5/16 7.9	19/64 7.5	.062 1.57	5/16-24	1.9 .86
1 1/2	40	3-18 5308	7901 35144	3.3465 85	1 15/16 49.2	1 3/16 30.2	1 3/32 27.8	2 19/64 58.3	5/16 7.9	19/64 7.5	.062 1.57	5/16-24	2.2 1.00
1 11/16 1 3/4	45	3-111 3-112 5309	7889 35090	3.5433 90	2 1/32 51.6	1 9/32 32.5	1 1/8 28.6	2 15/32 62.7	3/8 9.5	17/64 6.7	.062 1.57	3/8-24	2.4 1.09
1 15/16	50	3-115 5310	9752 43377	3.9370 100	2 3/16 55.6	1 5/16 33.3	1 3/16 30.2	2 23/32 69.1	3/8 9.5	19/64 7.5	.080 2.03	3/8-24	3.2 1.45
2 3/16	55	3-23 5311	11789 52437	4.3307 110	2 9/16 65.1	1 9/16 39.7	1 1/4 31.8	2 63/64 75.8	7/16 11.1	21/64 8.3	.080 2.03	3/8-24	4.2 1.91
2 7/16 2 1/2	65	3-27 3-28 5313	13971 62143	4.9213 125	2 3/4 69.9	1 11/16 42.9	1 3/8 34.9	3 7/16 87.3	7/16 11.1	3/8 9.5	.080 2.03	7/16-20	6.5 2.95
2 11/16	70	3-211 5314	14839 66004	5.1181 130	3 1/16 77.8	1 3/4 44.5	1 1/2 38.1	3 41/64 92.5	7/16 11.1	3/8 9.5	.080 2.03	7/16-20	7.1 3.22
2 15/16 3	75	3-215 3-3 5315	17412 77449	5.5118 140	3 1/4 82.6	1 15/16 49.2	1 11/16 42.9	3 59/64 99.6	17/32 13.5	13/32 10.3	.120 3.05	7/16-20	8.2 3.72
3 3/16	80	3-33 5316	18681 83093	5.9055 150	3 3/8 85.7	2 1/32 51.6	1 15/16 49.2	4 5/32 105.6	15/32 11.9	17/32 13.5	.120 3.05	7/16-20	10.0 4.54
3 7/16		3-37	21566 95926	6.2992 160	3 25/32 96.0	2 7/32 56.4	2 50.8	4 25/64 111.5	5/8 15.9	15/32 11.9	.120 3.05	1/2-20	11.7 5.31
3 15/16 4	100	3-315 3-4 5320	29905 133017	7.4803 190	4 5/8 117.5	2 11/16 68.3	2 1/2 63.5	5 11/64 131.4	3/4 19.1	19/32 15.1	.120 3.05	5/8-18	20.4 9.25

Metric dimensions for reference only.
Not all parts are available from stock. Please contact customer service for availability (800) 626-2120.
For more information on bearing capabilities outside of our standard offering, please contact Application Engineering (800) 626-2093.

Performance Mounted Ball Bearings

SEALMASTER®

Duty: Medium
Rolling Elements: Ball
Lock: SKWEZLOC Locking Collar
Seal: Felt
Optional Seal: Contact
Temperature: -20° to 220°F

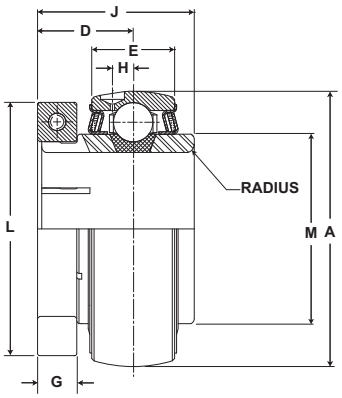

Medium Duty Bearing Insert - SKWEZLOC Locking Collar

Bore Diameter		Part No.	Basic Dynamic Rating lb/N	Dimensions inch / mm								Max Rad. To Clear	Torx Cap Screw	Unit Wt. lb/kg
inch	mm			A	J	D	E	G	H	L	M			
1	25.4	3-1T	4381 19487	2.4409 62	1 9/16 39.7	7/8 22.2	7/8 22.2	3/8 9.5	7/32 5.6	2 1/16 52.4	1 19/32 40.5	.040 1.02	T-25	1.2 .54
1 3/16	30.2	3-13T	5782 25718	2.8346 72	1 3/4 44.5	1 25.4	15/16 23.8	7/16 11.1	1/4 6.4	2 7/16 61.9	1 55/64 47.2	.040 1.02	T-27	1.8 .82
1 7/16	36.5	3-17T	7340 32648	3.1496 80	2 50.8	1 3/16 30.2	1 3/32 27.8	7/16 11.1	19/64 7.5	2 11/16 68.3	2 1/16 52.4	.062 1.57	T-27	2.2 1.00
1 1/2	38.1	3-18T	7901 35144	3.3470 85	2 50.8	1 3/16 30.2	1 3/32 27.8	7/16 11.1	19/64 7.5	2 13/16 71.4	2 19/64 58.3	.062 1.57	T-27	2.5 1.13
1 11/16 1 3/4	42.9 44.5	3-111T 3-112T	7889 35090	3.5433 90	2 3/32 53.2	1 9/32 32.5	1 1/8 28.6	9/16 14.3	17/64 6.7	3 1/4 82.6	2 15/32 62.7	0.062 1.57	T-30	3.0 1.36
1 15/16	49.2	3-115T	9752 43377	3.9370 100	2 1/4 57.2	1 5/16 33.3	1 3/16 30.2	9/16 14.3	19/64 7.5	3 1/2 88.9	2 23/32 69.1	.080 2.03	T-30	3.8 1.72
2 3/16	55.6	3-23T	11789 52437	4.3307 110	2 5/8 66.7	1 9/16 39.7	1 1/4 31.8	11/16 17.5	21/64 8.3	4 1/16 103.2	2 63/64 75.8	.080 2.03	T-45	4.9 2.22

For Replacement Lock Collar see page G-98.

SEALMASTER® Performance Mounted Ball Bearings

Duty: Medium
Rolling Elements: Ball
Lock: Double Setscrew
Seal: Felt
Optional Seal: Contact
Temperature: -20° to 220°F

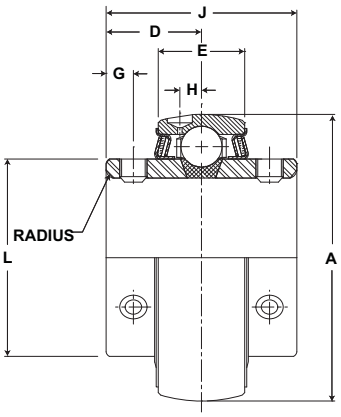

Medium Duty Bearing Insert – Double Setscrew

Bore Diameter inch	Part No.	Basic Dynamic Rating lb/N	Dimensions inch / mm A	D	E	G	H	L	J	Max Rad. To Clear	Setscrew Thread	Unit Wt. lb/kg
1	3-1D	4381 19487	2.4409 62	7/8 22.2	7/8 22.2	7/32 5.6	7/32 5.6	1 19/32 40.5	1 3/4 44.5	.040 1.02	1/4-28	1.0 .45
1 3/16	3-13D	5782	2.8346 72	1 25.4	15/16 23.8	1/4 6.4	1/4 6.4	1 55/64 47.2	2 50.8	.040 1.02	5/16-24	1.5 .68
1 7/16	3-17D	7340 32648	3.1496 80	1 5/32 29.4	1 3/32 27.8	31/99 8.0	19/64 7.5	2 1/16 52.4	2 5/16 58.7	.062 1.57	5/16-24	2.0 .91
1 1/2	3-18D	7901	3.3470 85	1 3/16 30.2	1 3/32 27.8	11/32 8.7	19/64 7.5	2 19/64 58.3	2 3/8 60.3	.062 1.57	5/16-24	2.5 1.13
1 11/16 1 3/4	3-111D 3-112D	7889 35090	3.5433 90	1 1/4 31.8	1 1/8 28.6	11/32 8.7	17/64 6.7	2 15/32 62.7	2 1/2 63.5	.062 1.57	3/8-24	2.7 1.22
1 15/16	3-115D	9752	3.9370 100	1 5/16 33.3	1 3/16 30.2	31/99 8.0	19/64 7.5	2 23/32 69.1	2 5/8 66.7	.080 2.03	3/8-24	3.5 1.59
2 7/16 2 1/2	3-27D 3-28D	13971 62143	4.9207 125	1 3/4 44.5	1 3/8 34.9	15/32 11.9	3/8 9.5	3 7/16 87.3	3 1/2 88.9	.080 2.03	7/16-20	7.1 3.22
2 11/16	3-211D	14839	5.1181 130	1 3/4 44.5	1 1/2 38.1	39/89 11.1	3/8 9.5	3 41/64 92.5	3 1/2 88.9	.080 2.03	1/2-20	7.3 3.31
2 15/16 3	3-215D 3-3D	17412 77449	5.5118 140	1 15/16 49.2	1 11/16 42.9	49/87 14.3	13/32 10.3	3 59/64 99.6	3 7/8 98.4	.120 3.05	1/2-20	9 4.08
3 3/16	3-33D	18681	5.9055 150	2 1/32 51.6	1 15/16 49.2	1/2 12.7	17/32 13.5	4 5/32 105.6	4 1/16 103.2	.120 3.05	1/2-20	10.8 4.90
3 7/16	3-37D	21566 95926	6.2992 160	2 7/32 56.4	2 50.8	1/2 12.7	15/32 11.9	4 25/64 111.5	4 7/16 112.7	.120 3.05	1/2-20	12.6 5.72
3 15/16 4	3-315D 3-4D	29905 133017	7.4803 190	2 11/16 68.3	2 1/2 63.5	64/89 18.3	19/32 15.1	5 11/64 131.4	5 3/8 136.5	.120 3.05	5/8-18	21.6 9.80
4 7/16 4 15/16	3-47D 3-415D	37482 166720	9.0551 230	2 7/8 73.0	2 5/8 66.7	5/8 15.9	5/8 15.9	6 11/32 161.1	5 3/4 146.1	.120 3.05	5/8-18	40 18.14

Metric dimensions for reference only.
Not all parts are available from stock. Please contact customer service for availability (800) 626-2120.
For more information on bearing capabilities outside of our standard offering, please contact Application Engineering (800) 626-2093.

Locking Collar Replacement Table

SKWEZLOC Locking Collar Table							
Bore Diameter		Standard Duty	ER	MH	Collar	Medium Duty	
inch	mm	Insert	Insert	Insert		Insert	Collar
3/4	20	2-012T 5204TM	ER-12T ER-204TMC		2-012B Lock Collar		
15/16 1	25	2-015T 2-1T 5205TM	ER-16T ER-205TMC	MH-16T	2-015 Lock Collar	3-1T	2-13A Lock Collar
1 1/8 1 3/16 1 1/4*	30	2-12T 2-13T 1-14T 5206TM	ER-18T ER-19T ER-20RT ER-206TMC	MH-19T MH-20RT	2-13B Lock Collar	3-13T	2-17A Lock Collar
1 1/4		2-14T	ER-20T	MH20T	2-17A Lock Collar	2-14T	2-17A Lock Collar
1 3/8 1 7/16	35	2-16T 2-17T 5207TM	ER-22T ER-23T ER-207TMC	MH-23T	2-17B Lock Collar	3-17T	2-19A Lock Collar
1 1/2 1 9/16	40	2-18T 2-19T 5208TM	ER-24T ER-208TMC	MH-24T	2-19A Lock Collar	3-18T	2-111A Lock Collar
1 5/8		2-110T	ER-26T		2-111A Lock Collar		
1 11/16 1 3/4	45	2-111T 2-112T 5209TM	ER-27T ER-28T ER-209TMC	MH-27T	2-111B Lock Collar	3-111T 3-112T	2-115A Lock Collar
1 15/16 2*	50	2-115T 1-2T 5210TM	ER-31T ER-210TMC	MH-31T	2-115B Lock Collar	3-115T	2-23A Lock Collar
2		2-2T	ER-32T	MH-32T	2-23A Lock Collar	2-2T	2-23A Lock Collar
2 1/8 2 3/16	55	2-22T 2-23T 5211TM	ER-35T ER-211TMC	MH-35T	2-23B Lock Collar	3-23T	2-27A Lock Collar
2 1/4		2-24T	ER-36T		2-27A Lock Collar		
2 3/8 2 7/16	60	2-26T 2-27T 5212TM	ER-38T ER-39T ER-512TMC	MH-39T	2-27B Lock Collar		

*Reduced Housing

Sealmaster ER Style Ball Bearings

Sealmaster Gold ER bearings feature a cylindrical OD and snap ring for easy installation in a roll assembly. Shaft lock is achieved by either setscrew or Skwezloc® concentric locking collar. The felt seal with flinger provide a good balance between contaminant entry, GoldPlex HP™ grease loss and friction. Depending on your preference, these bearings are available in both inch and metric shaft sizes with a wide variety of sealing and lubrication options or ERX-TREME industry specific solutions as illustrated on the pages to follow.

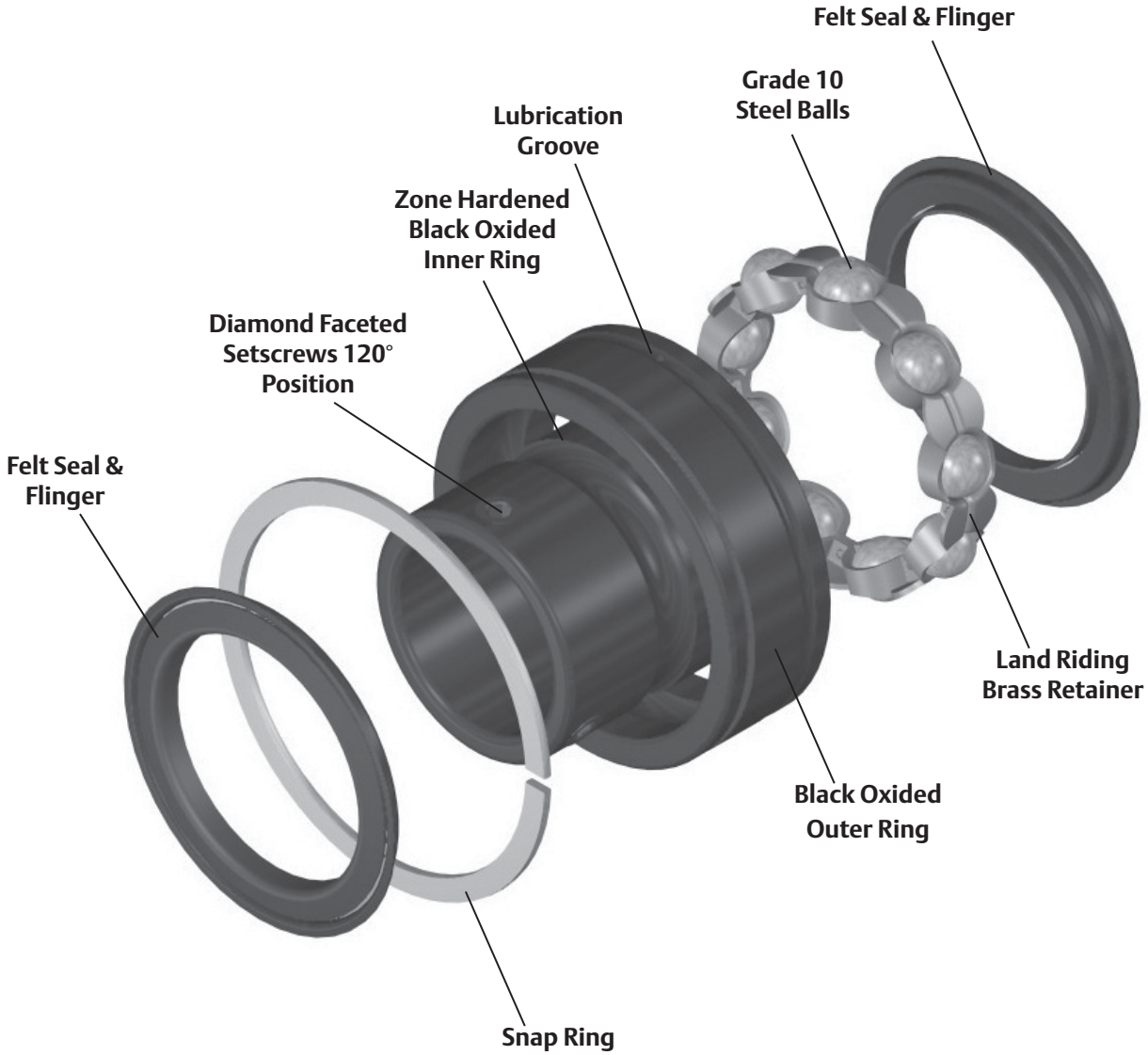

ER Style Nomenclature

ER - Cylindrical O.D. Bearing With Snap Ring

X - ERX-TREME Option

Bore Size

Inch - ##/16 (ex. 20/16 = 1 1/4”)

R for 1 1/4” and 2” Reduced Only

Metric - Standard Duty - 2##, ## x 5 mm (ex. 05 = 25 mm)

Standard Option

T - Skwezloc® Locking Collar

M - Metric Hardware (Metric - SKWEZ™)

C - Contact Seal

Common Option* (see table below)

ER X 16 T XLO

Common Option

3C	Triple Lip Contact Seal - replaced by DRT in most sizes
DRT	High Contamination
HI	ERX-Treme High Temperature Krytox* Grease
HIY	ERX-Treme High Temperature Krytox* Grease Expansion
LO	ERX-Treme Low Drag
X	Labyrinth Seal
XLO	ERX-Treme Extra Low Drag

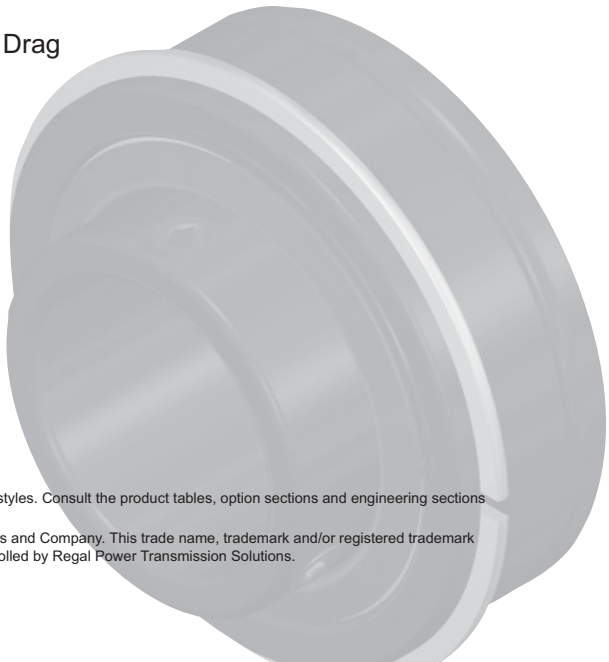

*Note: Configurations are not available in all sizes or housing styles. Consult the product tables, option sections and engineering sections for more detail or consult a Bearing Application Engineer.

**KRYTOX is a registered trademark of E.I. du Pont de Nemurs and Company. This trade name, trademark and/or registered trademark is property of their respective owner and is not owned or controlled by Regal Power Transmission Solutions.

Features and Benefits

Outer Race With Tapered Lands

The Sealmaster ER Bearings Outer Ring is black oxided and comes standard with a locating ring and lubrication groove and lubrication inlet. In addition, they have the Sealmaster patented Tapered Lands bearing race profile which means that critical lubricant is circulated more efficiently, while requiring no regular service intervals. The outer land surface in a conventional bearing is parallel to the axis of the inner ring. The Tapered Lands surface is tapered in a radial direction toward the bearing race. This subtle yet crucial design change allows lubricant to more easily flow back to the raceway. With improved bearing lubricant circulation comes significantly longer bearing service life. This improved circulation and service life comes without any reductions in bearing radial or thrust capacities.

* For bearings that are maintained and relubricated on a regular basis, there is no significant difference in expected life.

Multiple Sealing Options
Felt Seal With Flinger

The standard felt seal provides a tight labyrinth seal which retains lubrication and acts as a filter to exclude contamination. The external stamping is a flinger which shields the felt from large contaminants and directs them away from the sealing surface. The design operates with less drag and less heat generation than rubber contact seals.

Single Lip Contact Seal

Single Lip Contact Seal consists of a nitrile rubber washer in metal shroud to shield the lip from large contaminants. The seal is designed to balance drag and protection in wet and dry environments. This can be specified by adding the suffix C to the part number.

Additional Sealing Options can be found on pages G-103 to G-106.

Features and Benefits continued

Multiple Locking Methods
Setscrew Locking

120° spaced, balanced three point contact minimizes inner ring distortion vibration, reduces noise, and improves reliability. Precision manufactured diamond faceted setscrews contribute to improved clamping and resistance to back out.

Sealmaster Skwezloc® Concentric Locking Collar

SKWEZLOC is a concentric locking collar clamp design that results in near-perfect concentricity of the shaft to the bearing bore and maintains near perfect ball path roundness, while reducing fretting corrosion. This design eliminates the shaft damage of setscrew locking, and minimizes bearing induced vibration for smoother quieter operation. The collar has a TORX head cap screw that outlasts stripping 12 times longer than hex head cap screws.

Zone Hardened Inner Race

Sealmaster incorporates a unique heat treat process that hardens the inner race only where it is needed...under the ball path. The black oxided zone hardened inner race results in improved lock reliability as a result of less distortion at the setscrew location and improved thread conformity resulting in improved clamping and resistance to setscrew back-out.

Land Riding Retainer

The Sealmaster unique land riding metal retainer design provides superior pocket clearance allows for 360° oil circulation around the rolling elements resulting in better retained and utilized lubrication.

Options

Bearings are typically selected using L10 fatigue life calculations based on ideal operating conditions. However, most bearing problems are not fatigue related, but occur due to contamination, lubrication starvation, or other environmental issues. As a result our Bearing engineers have developed custom solutions to meet the varying severity, operating parameters and maintenance regularity, such as ERX-TREME and Custom Select.

ERX-TREME Options
Low Drag

Suffix	Description	Temperature	Environment	Speed Limits
LO	Low Drag	-20°F to 180°F	Dry/Dusty	Pages G-235 to G-240
XLO	Extra Low Drag	-20°F to 100°F		

ERX-TREME Low Drag "LO"

- Felt seal cut down to reduce drag
- Provides excellent barrier that works to retain grease and acts as a filter to reduce the ingress of debris contaminants
- Features a channeling grease that reduces drag while lubricating the bearing

ERX-TREME X-Tra Low Drag "XLO"

- Felt seal cut down and oil soaked for extra low drag
- Oil lubricated

Bearing Rotational Torque - Comparison Chart

	Company	Suffix Option	Seal Type	Lubrication
LO Drag Bearing Options	AMI®	FS	Non-Contact	Oil
	Sealmaster	XLO	Low Drag Felt	Oil
	MB®	HFF	Steel Labyrinth	Oil
	Peer®	ZSFF	Steel Labyrinth	Oil
	Sealmaster	LO	Low Drag Felt	Grease
	MB	MHFF	Steel Labyrinth	Grease
	FYH®	DSK3	Non-Contact	Oil
	Peer	ZMKFF	Steel Labyrinth	Grease
Standard Bearing Drag (Reference)	Sealmaster	-	Felt	Grease
	Sealmaster	C	Contact	Grease

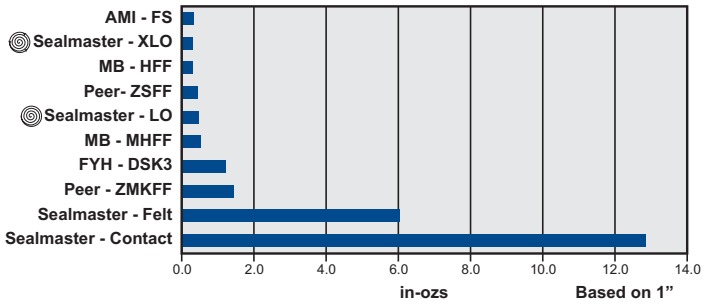

ERX-TREME Options continued

High Temperature

Suffix	Description	Temperature	Environment	Speed Limits
HI*	High Performance High Temp	200°F to 400°F	Dry/Dusty	Pages G-235 to G-240
HIY				

ERX-TREME High Temperature "HI"

- High temperature bearing with increased internal clearance to accommodate thermal expansion of components
- High temperature Nomex seal* and Krytox*-226 grease

ERX-TREME Expansion - High Temperature "HIY"

- Expansion type HI Temperature utilizes a half-dog setscrew combined with a lock wire and is recommended for applications that require expansion capability.
- High temperature bearing with increased radial internal clearance to accommodate thermal expansion of components
- High temperature Nomex seal and Krytox*-226 grease
- Specify as ERX-xx HIY

This may be essential when shafts grow in length due to temperature changes. The single half-dog setscrew has a cylindrical nub that protrudes out of the bottom of the setscrew. The nub is used to mate loosely with a slot milled into the shafting. As the shaft spins, the nub interferes with the slot and positively turns the inner ring. See HIY installation instructions.

Note: All expansion bearings must be used in conjunction with a fixed bearing to stabilize the system.

KRYTOX Extended Lube Grease

- Used in HI and HIY suffix modified bearings
- KYRTOX GPL 226, an extremely high performance perflourinated oil and PTFE thickened grease
- KRYTOX grease has a superior service life and therefore diminishes re-lubrication frequency and extends life
- Engineers have found that, compared to other high temperature greases, the thermal stability and lubricity of the KRYTOX can improve high temperature bearing life by a factor of 4 to 45 times

Custom Select

High Contamination

Suffix	Description	Temperature	Environment	Speed Limits
DRT	Highly Contaminated	-20°F to 200°F	Highly Contaminated	Pages G-235 to G-240

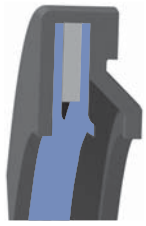

2C Seal

3C Seal

High Contamination "DRT"

Heavy Duty Multi-Lip contact seal (depending on size and series, either supplied with "2C" double lip or "3C" triple lip seal), 100% Grease Fill with Sealmaster GoldPlex HP Grease.

Options Availability*

ERX-TREME Options											ER Custom Select Option	
Bore Diameter		Nomenclature Size	Low Drag "LO"		X-Tra Low Drag "XLO"		High Temp. "HI"		High Temp. Exp. "HIY"		High Contamination "DRT"	
inch	mm											
1/2		8	O		O		O					
5/8		10	O		O		O					
11/16		11	O		O							
3/4		12	O	X	O		O	X	O			
	20	204	O	X	O	X		X				
7/8		14	O		O		O		O			
15/16		15	O		O		O		O			
1		16	O	X	O	X	O	X	O		O	X
	25	205	O	X	O	X	O				O	
1 1/8		18	O	X	O	X	O		O			
1 3/16		19	O	X	O	X	O		O			
1 1/4R		20R	O	X	O	X	O		O			
	30	206	O	X	O	X					O	X
1 1/4		20	O	X	O	X	O	X	O		O	
1 5/16		21	O									
1 3/16		22	O	X	O	X	O		O			
1 7/16		23	O	X	O	X	O		O		O	X
	35	207	O	X	O	X	O	X				
1 8/16		24	O	X	O	X	O	X	O		O	
1 9/16		25	O		O		O		O		O	
	40	208	O	X	O	X	O		O			
1 5/8		26		X	O		O				O	
1 11/16		27			O		O		O			
1 3/4		28	O	X	O	X	O		O		O	X
	45	209	O	X	O	X						
1 7/8		30	O				O		O		O	
1 15/16		31	O	X	O	X	O	X	O		O	X
2		32	O	X	O	X	O		O		O	
	50	210	O	X	O	X	O					
2 1/8		34	O									
2 3/16		35	O	X	O	X	O		O		O	X
2 1/4		36	O	X	O		O		O			
2 3/8		38			O		O		O			
2 7/16		39	O	X	O	X	O	X	O		O	X
	60	212					O					
2 1/2		40					O		O			
2 11/16		43					O		O		O	
	70	214										
2 15/16		47	O	X	O	X	O		O		O	
3		48					O		O			
3 3/16		51					O		O		O	
3 1/4		52					O					
3 7/16		55					O		O			
3 15/16		63					O					
4		64					O					

O Setscrew
X Skwezloc Locking Collar
* Sizes and configurations listed in table are subject to change without notice.
For sizes or configurations not listed, contact Bearing Technical Customer Service.

SEALMASTER® Performance Cylindrical OD Bearings (ER)

Duty: Standard
Rolling Elements: Ball
Housing: Cylindrical OD Insert
Lock: Setscrew
Seal: Felt
Optional Seal: Contact
Temperature: -20° to 220°F
Relube: Relube Through Outer Ring Groove

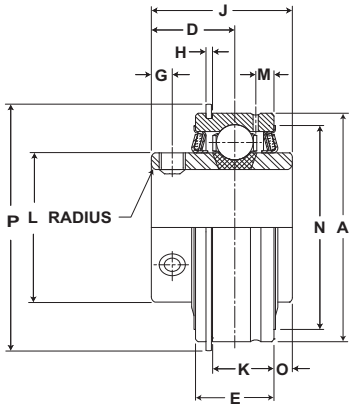

ER Cylindrical O.D. Bearing Insert - Setscrew Locking

Bore Diameter		Bearing Insert No.	Basic Dynamic Rating lb/N	Dimensions inch / mm												Max. Rad. To Clear	Unit Wt. lb/kg
inch	mm			A	D	E	G	H	J	K	L	M	N	O	P		
1/2 9/16 5/8 11/16 3/4	20	ER-8 ER-9 ER-10 ER-11 ER-12 ER-204	2611 11614	1.8504 47	13/16 20.6	5/8 15.9	3/16 4.8	3/64 1.2	1 7/32 31.0	31/64 12.3	1 3/16 30.2	11/64 4.4	1 5/8 41.3	.094 2.39	2 1/16 52.4	.040 1.02	.56 .25
7/8 15/16 1	25	ER-14 ER-15 ER-16 ER-205	2801 12459	2.0472 52	55/64 21.8	3/4 19.1	7/32 5.6	3/64 1.2	1 3/8 34.9	39/64 15.5	1 3/8 34.9	13/64 5.2	1 55/64 47.2	.135 3.43	2 17/64 57.5	.040 1.02	.68 .31
1 1/16 1 1/8 1 3/16 1 1/4	30	ER-17 ER-18 ER-19 ER-20R ER-206	4381 19487	2.4409 62	7/8 22.2	7/8 22.2	7/32 5.6	1/16 1.6	1 1/2 38.1	11/16 17.5	1 19/32 40.5	7/32 5.6	2 5/32 54.8	.188 4.78	2 21/32 67.5	.040 1.02	.93 .42
1 1/4 1 5/16 1 3/8 1 7/16	35	ER-20 ER-21 ER-22 ER-23 ER-207	5782 25718	2.8364 72	1 25.4	15/16 23.8	1/4 6.4	1/16 1.6	1 11/16 42.9	3/4 19.1	1 55/64 47.2	7/32 5.6	2 17/32 64.3	.219 5.56	3 5/64 78.2	.040 1.02	1.37 .62
1 1/2 1 9/16	40	ER-24 ER-25 ER-208	5307 23606	3.1496 80	1 3/16 30.2	1 3/32 27.8	5/16 7.9	1/16 1.6	1 15/16 49.2	29/32 23.0	2 1/16 52.4	1/4 6.4	2 53/64 71.8	.203 5.16	3 13/32 86.5	.062 1.57	2 .91
1 5/8 1 11/16 1 3/4	45	ER-26 ER-27 ER-28 ER-209	7901 35144	3.3465 85	1 3/16 30.2	1 3/32 27.8	5/16 7.9	1/16 1.6	1 15/16 49.2	29/32 23.0	2 19/64 58.3	1/4 6.4	3 1/16 77.8	.203 5.16	3 19/32 91.3	.062 1.57	2.31 1.05
1 13/16 1 7/8 1 15/16 2	50	ER-29 ER-30 ER-31 ER-32R ER-210	7889 35090	3.5433 90	1 9/32 32.5	1 1/8 28.6	3/8 9.5	3/32 2.4	2 1/32 51.6	29/32 23.0	2 15/32 62.7	19/64 7.5	3 7/32 81.8	.188 4.78	3 25/32 96.0	.062 1.57	2.43 1.10
2 2 1/8 2 3/16	55	ER-32 ER-34 ER-35 ER-211	9752 43377	3.9370 100	1 5/16 33.3	1 3/16 30.2	3/8 9.5	3/32 2.4	2 3/16 55.6	31/32 24.6	2 23/32 69.1	19/64 7.5	3 9/16 90.5	.281 7.14	4 3/16 106.4	.080 2.03	3 1.36
2 1/4 2 3/8 2 7/16	60	ER-36 ER-38 ER-39 ER-212	11789 52437	4.3307 110	1 9/16 39.7	1 1/4 31.8	7/16 11.1	3/32 2.4	2 9/16 65.1	1 1/32 26.2	2 63/64 75.8	19/64 7.5	3 29/32 99.2	.375 9.53	4 37/64 116.3	.080 2.03	4 1.81
2 1/2 2 11/16	70	ER-40 ER-43 ER-214	13971 62143	4.9213 125	1 11/16 42.9	1 3/8 34.9	7/16 11.1	7/64 2.8	2 3/4 69.9	1 7/64 28.2	3 7/16 87.3	5/16 7.9	4 7/16 112.7	.375 9.53	5 9/32 134.1	.080 2.03	5.56 2.52
2 7/8 2 15/16	75	ER-46 ER-47 ER-215	14839 66004	5.1181 130	1 3/4 44.5	1 1/2 38.1	7/16 11.1	7/64 2.8	3 1/16 77.8	1 15/16 31.5	1 15/64 92.5	3/8 9.5	4 5/8 117.5	.563 14.30	5 7/16 138.1	.080 2.03	6.37 2.89
3 3 3/16	80	ER-48 ER-51 ER-216	17412 77449	5.5118 140	1 15/16 49.2	1 11/16 42.9	17/32 13.5	7/64 2.8	3 1/4 82.6	1 25/64 35.3	3 59/64 99.6	7/16 11.1	4 63/64 126.6	.469 11.91	5 13/16 147.6	.120 3.05	7.85 3.56
3 1/4 3 3/8 3 7/16		ER-52 ER-54 ER-55	18681 83093	5.9055 150	2 1/32 51.6	1 15/16 49.2	15/32 11.9	7/64 2.8	3 3/8 85.7	1 41/64 41.7	4 5/32 105.6	7/16 11.1	5 19/64 134.5	.375 9.53	6 9/32 159.5	.120 3.05	9.5 4.31
3 15/16 4		ER-63 ER-64	29905 133017	7.4803 190	2 11/16 68.3	2 1/2 63.5	3/4 19.1	1/8 3.2	4 5/8 117.5	2 5/32 54.8	5 11/64 131.4	11/16 17.5	6 21/32 169.1	.688 17.48	8 203.2	.120 3.05	22 9.98

For Housing fit guidelines see page G-259.
Felt seal standard. For contact seal add suffix “C” ER-16C.

Outside diameter may be oversized due to seal press fit.
Metric dimensions for reference only.
Not all parts are available from stock. Please contact customer service for availability (800) 626-2120.
For more information on bearing capabilities outside of our standard offering, please contact Application Engineering (800) 626-2093.

Performance Cylindrical OD Bearings (ER)

SEALMASTER®

Duty: Standard

Rolling Elements: Ball

Housing: Cylindrical OD Insert

Lock: SKWEZLOC Locking Collar

Seal: Felt

Optional Seal: Contact

Temperature: -20° to 220°F

Relube: Relube Through Outer Ring Groove

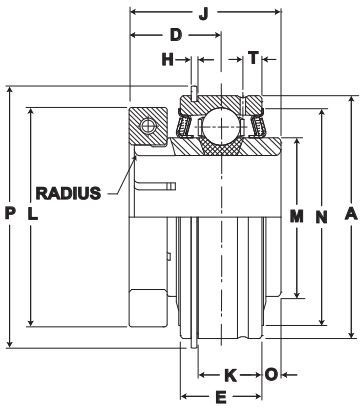

ER-T Cylindrical O.D. Bearing - SKWEZLOC Locking Collar - Inch

Bore Diameter inch	Bearing Insert No.	Basic Dynamic Rating lb/N	Dimensions inch / mm												Max. Rad. To Clear	Unit Wt. lb/kg
			A	D	E	H	J	K	L	M	N	O	P	T		
3/4	ER-12T	2611 11614	1.8504 47.0	7/8 19.8	5/8 15.9	3/64 1.2	1 9/32 32.5	31/64 12.3	1 3/4 44.5	1 3/16 30.2	1 5/8 41.3	.094 2.39	2 1/16 52.4	1/8 3.2	.04 1.02	.56 .25
1	ER-16T	2801 12459	2.0472 52.0	59/64 22.1	3/4 19.1	3/64 1.2	1 7/16 36.5	39/64 15.5	1 15/16 49.2	1 3/8 34.9	1 27/32 46.8	.135 3.43	2 17/64 57.5	13/64 5.2	.04 1.02	.68 .31
1 1/8 1 3/16 1 1/4	ER-18T ER-19T ER-20RT	4381 19487	2.4409 62.0	15/16 23.8	7/8 22.2	1/16 1.6	1 9/16 39.7	11/16 17.5	2 3/16 55.6	1 19/32 40.5	2 5/32 54.8	.188 4.78	2 21/32 67.5	7/32 5.6	.04 1.02	.93 .42
1 1/4	ER-20T	5782 25718	2.8346 72.0	1 1/16 27.0	15/16 23.8	1/16 1.6	1 3/4 44.5	3/4 19.1	2 7/16 61.9	1 55/64 47.2	2 17/32 64.3	.219 5.56	3 5/64 78.2	7/32 5.6	.04 1.02	1.37 .62
1 3/8 1 7/16	ER-22T ER-23T	5782 25718	2.8346 72.0	1 1/16 27.0	15/16 23.8	1/16 1.6	1 3/4 44.5	3/4 19.1	2 9/16 65.1	1 55/64 47.2	2 17/32 64.3	.219 5.56	3 5/64 78.2	7/32 5.6	.04 1.02	1.37 .62
1 1/2	ER-24T	7340 32648	3.1496 80.0	1 1/4 31.8	1 3/32 27.8	1/16 1.6	2 50.8	29/32 23.0	2 11/16 68.3	2 1/16 52.4	2 53/64 71.8	.203 5.16	3 13/32 86.5	1/4 6.4	.06 1.57	2.00 .91
1 5/8	ER-26T	7901 35144	3.3465 85.0	1 1/4 31.8	1 3/32 27.8	1/16 1.6	2 50.8	29/32 23.0	2 13/16 71.4	2 19/64 58.3	3 1/32 77.0	.203 5.16	3 19/32 91.3	1/4 6.4	.06 1.57	2.31 1.05
1 11/16 1 3/4	ER-27T ER-28T	7901 35144	3.3465 85.0	1 1/4 31.8	1 3/32 27.8	1/16 1.6	2 50.8	29/32 23.0	2 15/16 74.6	2 19/64 58.3	3 1/32 77.0	.203 5.16	3 19/32 91.3	1/4 6.4	.06 1.57	2.31 1.05
1 15/16	ER-31T	7889 35090	3.5433 90.0	1 11/32 34.1	1 1/8 28.6	3/32 2.4	2 3/32 53.2	29/32 23.0	3 3/8 85.7	2 15/32 62.7	3 7/32 81.8	.188 4.78	3 25/32 96.0	19/64 7.5	.06 1.57	2.43 1.10
2	ER-32T	9752 43377	3.9370 100.0	1 3/8 34.9	1 3/16 30.2	3/32 2.4	2 1/4 57.2	31/32 24.6	3 1/2 88.9	2 23/32 69.1	3 9/16 90.5	.281 7.14	4 3/16 106.4	19/64 7.5	.08 2.03	3.00 1.36
2 3/16	ER-35T	9752 43377	3.9370 100.0	1 3/8 34.9	1 3/16 30.2	3/32 2.4	2 1/4 57.2	31/32 24.6	3 5/8 92.1	2 23/32 69.1	3 9/16 90.5	.281 7.14	4 3/16 106.4	19/64 7.5	.08 2.03	3.00 1.36
2 1/4	ER-36T	11789 52437	4.3307 110.0	1 5/8 41.3	1 1/4 31.8	3/32 2.4	2 5/8 66.7	1 1/32 26.2	4 1/16 103.2	2 63/64 75.8	3 29/32 99.2	.375 9.53	4 37/64 116.3	19/64 7.5	.08 2.03	4.00 1.81
2 3/8 2 7/16	ER-38T ER-39T	11789 52437	4.3307 110.0	1 5/8 41.3	1 1/4 31.8	3/32 2.4	2 5/8 66.7	1 1/32 26.2	4 1/8 104.8	2 63/64 75.8	3 29/32 99.2	.375 9.53	4 37/64 116.3	19/64 7.5	.08 2.03	4.00 1.81

ER-T Cylindrical O.D. Bearing - SKWEZLOC Locking Collar - Metric - SKWEZ™

Bore Diameter mm	Bearing Insert No.	Basic Dynamic Rating N/lb	Dimensions mm / inch												Max. Rad. To Clear	Unit Wt. kg/lb
			A	D	E	L	H	J	K	M	N	O	P	T		
20	ER-204TMC	11614 2611	47.0 1.8504	19.8 7/8	15.9 5/8	44.5 1 3/4	1.2 3/64	32.5 1 9/32	12.3 31/64	30.2 1 3/16	41.3 1 5/8	2.39 .094	52.4 2 1/16	3.2 1/8	1.02 .04	.25 .56
25	ER-205TMC	12459 2801	52.0 2.0472	22.1 59/64	19.1 3/4	49.2 1 15/16	1.2 3/64	36.5 1 7/16	15.5 39/64	34.9 1 3/8	46.8 1 27/32	3.43 .135	57.5 2 17/64	5.2 13/64	1.02 .04	.31 .68
30	ER-206TMC	19487 4381	62.0 2.4409	23.8 15/16	22.2 7/8	55.6 2 3/16	1.6 1/16	39.7 1 9/16	17.5 11/16	40.5 1 19/32	54.8 2 5/32	4.75 .187	67.5 2 21/32	5.6 7/32	1.02 .04	.42 .93
35	ER-207TMC	25718 5782	72.0 2.8346	27.0 1 1/16	23.8 15/16	65.1 2 9/16	1.6 1/16	44.5 1 3/4	19.1 3/4	47.2 1 55/64	64.3 2 17/32	5.56 .219	78.2 3 5/64	5.6 7/32	1.02 .04	.62 1.37
40	ER-208TMC	32648 7340	80.0 3.1496	31.8 1 1/4	27.8 1 3/32	68.3 2 11/16	1.6 1/16	50.8 2	23.0 29/32	52.4 2 1/16	71.8 2 53/64	4.76 .188	86.5 3 13/32	6.4 1/4	1.57 .06	.91 2.00
45	ER-209TMC	35144 7901	85.0 3.3465	31.8 1 1/4	27.8 1 3/32	74.6 2 15/16	1.6 1/16	50.8 2	23.0 29/32	58.3 2 19/64	77.0 3 1/32	4.76 .188	91.3 3 19/32	6.4 1/4	1.57 .06	1.05 2.31
50	ER-210TMC	35090 7889	90.0 3.5433	34.1 1 11/32	28.6 1 1/8	85.7 3 3/8	2.4 3/32	53.2 2 3/32	23.0 29/32	62.7 2 15/32	81.8 3 7/32	4.78 .188	96.0 3 25/32	7.5 19/64	1.57 .06	1.10 2.43
55	ER-211TMC	43377 9752	100.0 3.9370	34.9 1 3/8	30.2 1 3/16	92.1 3 5/8	2.4 3/32	57.2 2 1/4	24.6 31/32	69.1 2 23/32	90.5 3 9/16	7.14 .281	106.4 4 3/16	7.5 19/64	2.03 .08	1.36 3.00
60	ER-212TMC	52437 11789	110.0 4.3307	41.3 1 5/8	31.8 1 1/4	104.8 4 1/8	2.4 3/32	66.7 2 5/8	26.2 1 1/32	75.8 2 63/64	99.2 3 29/32	9.53 .375	116.3 4 37/64	7.5 19/64	2.03 .08	1.81 4.00

For Housing fit guidelines see page G-259. For Replacement Lock Collar see page G-98.

Sealmaster Material Handling Mounted Ball Bearings

Sealmaster material handling mounted ball bearings feature cast iron housings, an extended inner race insert bearing with ball riding nylon retainer. The insert features a rivet to prevent outer ring rotation and is available with setscrew or SKWEZLOC® concentric locking collar and optional snap on end cover. The contact seal, with black oxide treated flinger provides a good balance between contaminant resistance, grease loss and friction. Depending on your preference, these bearings are available in common unit material handling industry bore sizes and housing configurations as illustrated on the pages to follow.

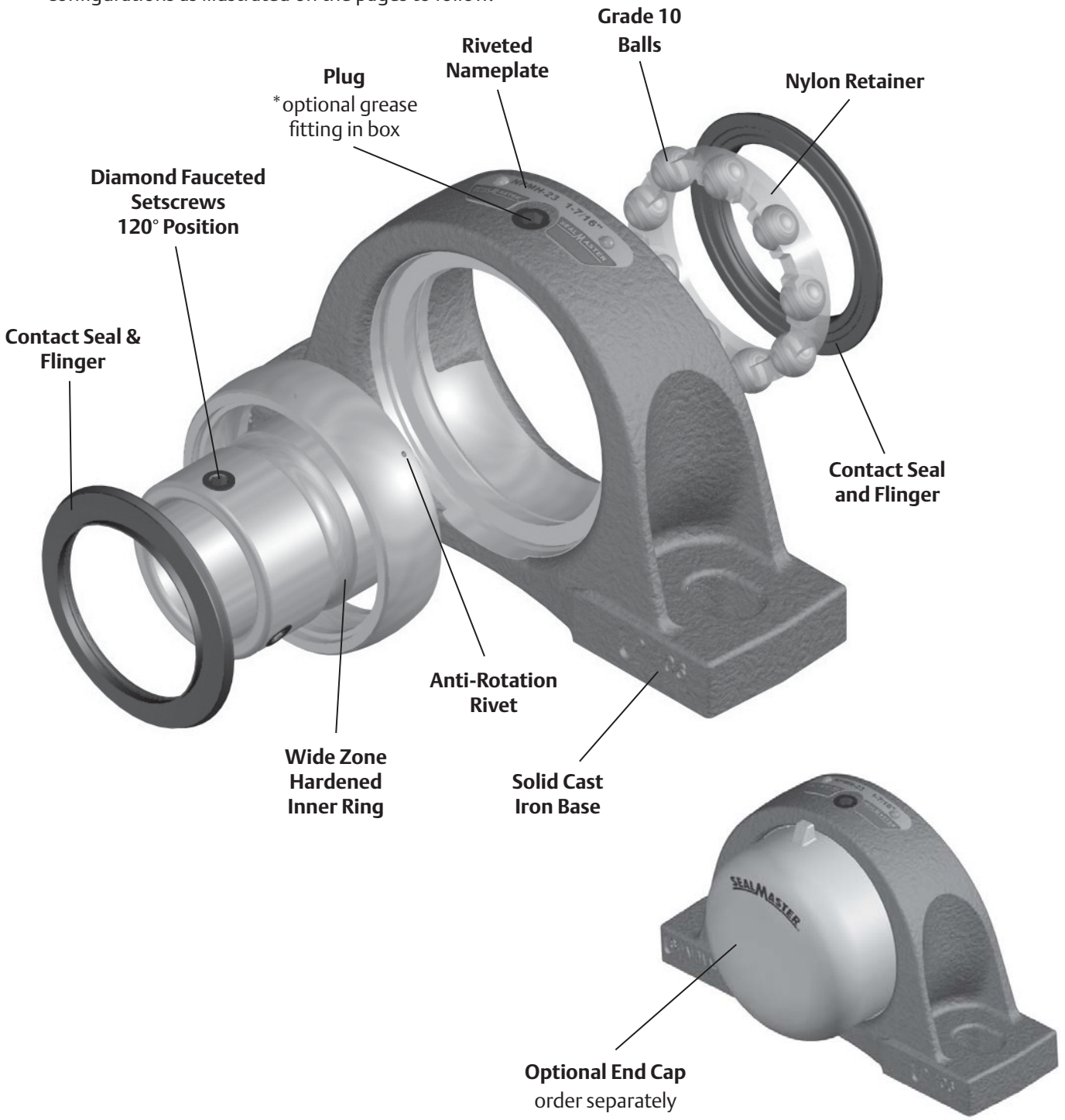

Material Handling Mounted Ball Nomenclature

Housing Units

Housing - Housing Style
- NP - Pillow Block - High Base
- TB - Tapped Base Pillow Block
- SF - Four Bolt Flange
- SFT - Two Bolt Flange
- FB - Flange Bracket
- ST - Wide Slot Take Up

Material Handling Bearing

Bore Size*
- Inch - ##/16 (ex. 20/16 = 1 1/4")
  - R for 1 1/4" and 2" Reduced Only

Locking Option*
- T - Skwezloc® Locking Collar

Common Option*
- CSK - 90° Lube Fitting

NP MH-16 T CSK

Inserts

Material Handling

Bore Size*
- Inch - ##/16 (ex. 20/16 = 1 1/4")
  - R for 1 1/4" and 2" Reduced Only

Standard Option*
- Setscrew
- T - Skwezloc® Locking Collar

MH-16 T

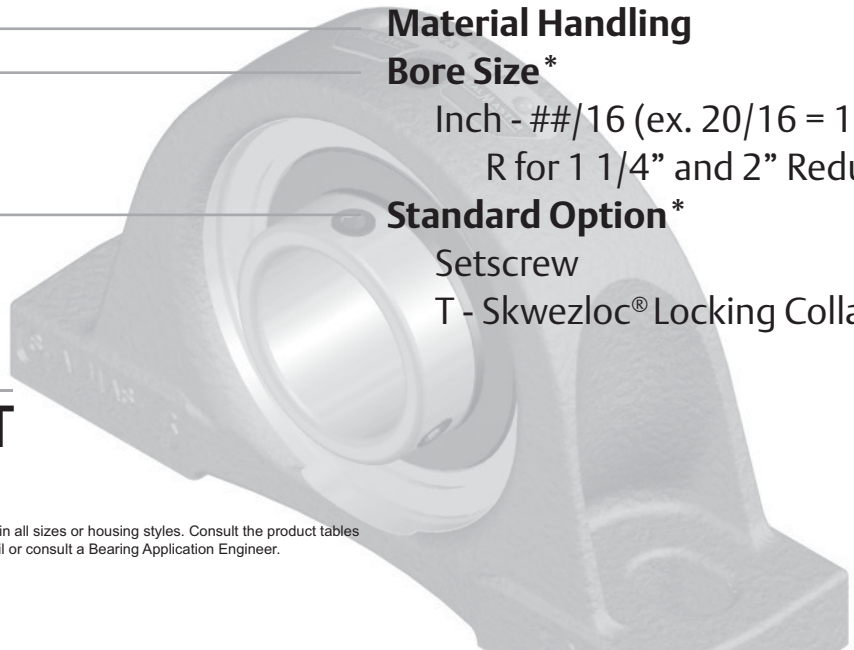

*Note: Configurations are not available in all sizes or housing styles. Consult the product tables and engineering sections for more detail or consult a Bearing Application Engineer.

Features and Benefits

Multiple Locking Methods

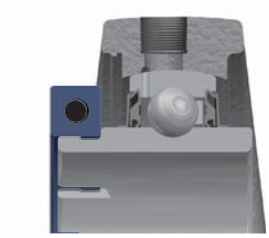

Skwezloc® Concentric Locking Collar

SKWEZLOC is a concentric locking collar clamp design that results in near-perfect concentricity of the shaft to the bearing bore and maintains near perfect ball path roundness, while reducing fretting corrosion. This design eliminates the shaft damage of setscrew locking, and minimizes bearing induced vibration for smoother quieter operation. The collar has a TORX head cap screw that outlasts stripping 12 times longer than hex head cap screws.

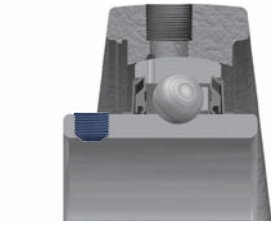

Setscrew Locking

120° spaced, balanced three point contact minimizes inner ring distortion vibration, reduces noise, and improves reliability. Precision manufactured diamond faceted setscrews contributes to improved clamping and resistance to back out.

Sealing

Positive contact molded nitrile rubber contact seal with an auxiliary flinger element standard. The contact seal allows grease purge and helps keep contamination out of the bearing while the flinger provides a rotating shield that directs contamination away from the seal.

Sealed for Life

The Sealmaster Material Handling Bearings are supplied with a plug in the housing to prevent relubrication. A standard lubrication fitting is supplied loose in the box for those customers who prefer relubricating the bearings.

End Caps

The Sealmaster Material Handling Bearings housing are machined to accept an optional safety yellow polymer snap on end cap to cover rotating shafts, allowing users to better conform to OSHA requirements for personal protection from rotating shafts. The end cap can easily snap into the housing without the need for special tooling.

Features and Benefits continued

Anti-Rotation Rivet

An Anti-rotation rivet prevents outer ring creep, or rotation, within the housing.

Zone Hardened Inner Race

Sealmaster incorporates a unique heat treat process that hardened the inner race only where it is needed...under the ball path. The zone hardened inner race results in improved lock reliability as a result of less distortion at setscrew location and improved thread conformity resulting in improved clamping and resistance to setscrew back-out.

Solid Cast Iron Base

Solid bases are standard on Sealmaster Material Handling ball bearing pillow blocks. The solid base provides improved stability, resistance to shock and vibration and prevents frame buckling under base compared to semi-solid and hollow mounting bases.

Nameplate

Metal nameplate riveted to the housing allows for easy identification even after years of operation.

SEALMASTER® Material Handling Bearings

Duty: Standard
Rolling Elements: Ball
Housing: Cast Iron Pillow Block
Self Alignment: +/- 1.5 Degrees
Lock: Setscrew
Seal: Contact Seal and Flinger
Temperature: -20° to 200°F
Relube: Plugged, Grease Fitting Included

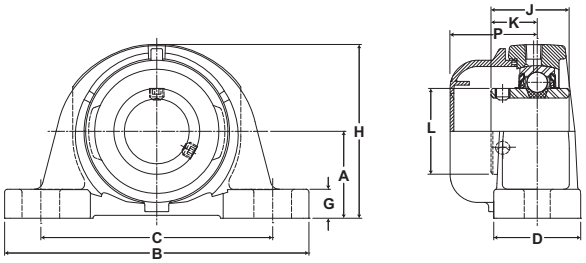

NPMH Series Standard Duty Pillow Block - Setscrew Locking

Bore Diameter inch	Part No.	Bearing Insert No.	Optional End Cap*	Basic Dynamic Rating lb/N	Dimensions inch / mm											Bolt Size	Unit Wt. lb/kg
					A	B	C Min.	C Max.	D	G	H	J	K	L	P		
1	NPMH-16	MH-16	ECC-16	2801 12459	1 7/16 36.5	5 1/2 139.7	3 7/8 98.4	4 3/8 111.1	1 1/2 38.1	1/2 12.7	2 13/16 71.4	1 3/8 34.9	13/16 20.6	1 3/8 34.9	1 11/16 42.9	3/8	2.0 .91
1 3/16 1 1/4	NPMH-19 NPMH-20R	MH-19 MH-20R	ECC-19	4381 19487	1 11/16 42.9	6 1/2 165.1	4 7/16 112.7	5 1/16 128.6	1 7/8 47.6	9/16 14.3	3 3/8 85.7	1 1/2 38.1	7/8 22.2	1 19/32 40.5	1 3/4 44.5	1/2	3.6 1.62
1 1/4 1 7/16	NPMH-20 NPMH-23	MH-20 MH-23	ECC-23	5782 25718	1 7/8 47.6	6 9/16 166.7	4 11/16 119.1	5 5/16 134.9	1 7/8 47.6	5/8 15.9	3 3/4 95.3	1 11/16 42.9	1 25.4	1 55/64 47.2	1 7/8 47.6	1/2	4.4 1.98
1 1/2	NPMH-24	MH-24	ECC-24	7340 32648	1 15/16 49.2	7 1/4 184.2	4 7/8 123.8	5 7/8 149.2	2 1/8 54.0	11/16 17.5	3 15/16 100.0	1 15/16 49.2	1 3/16 30.2	2 1/16 52.4	2 1/16 52.4	1/2	5.4 2.45
1 11/16	NPMH-27	MH-27	ECC-27	7901 35144	2 1/8 54.0	7 1/2 190.5	5 7/16 138.1	6 1/16 154.0	2 1/8 54.0	11/16 17.5	4 1/4 108.0	1 15/16 49.2	1 3/16 30.2	2 19/64 58.3	2 1/6 52.4	1/2	6.1 2.75
1 15/16	NPMH-31	MH-31	ECC-31	7889 35090	2 1/4 57.2	8 1/8 206.4	6 152.4	6 1/2 165.1	2 3/8 60.3	3/4 19.1	4 9/16 115.9	2 1/32 51.6	1 9/32 32.5	2 15/32 62.7	2 1/16 52.4	5/8	7.4 3.34
2 2 3/16	NPMH-32 NPMH-35	MH-32 MH-35	ECC-35	9752 43377	2 1/2 63.5	8 5/8 219.1	6 1/2 165.1	7 177.8	2 3/8 60.3	11/16 17.5	4 15/16 125.4	2 3/16 55.6	1 5/16 33.3	2 23/32 69.1	2 15/64 56.8	5/8	9.4 4.24

*Closed End Cap part number is shown for Open End Cap. See page L-4 in the Accessories section.

Metric dimensions for reference only.
Not all parts are available from stock. Please contact customer service for availability (800) 626-2120.
For more information on bearing capabilities outside of our standard offering, please contact Application Engineering (800) 626-2093.

Material Handling Bearings

SEALMASTER®

Duty: Standard
Rolling Elements: Ball
Housing: Cast Iron Pillow Block
Self Alignment: +/- 1.5 Degrees
Lock: Skwezloc Locking Collar
Seal: Contact Seal and Flinger
Temperature: -20° to 200°F
Relube: Plugged, Grease Fitting Included

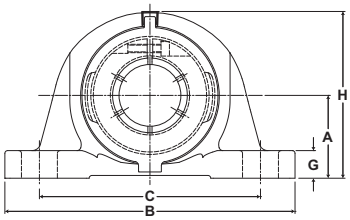

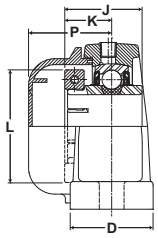

NPMH-T Series Standard Duty Pillow Block - Skwezloc Locking Collar

Bore Diameter inch	Part No.	Bearing Insert No.	Optional End Cap*	Basic Dynamic Rating lb/N	Dimensions inch / mm A	B	C Min.	C Max.	D	G	H	J	K	L	P	Bolt Size	Unit Wt. lb/kg
1	NPMH-16T	MH-16T	ECC-16	2801 12459	1 7/16 36.5	5 1/2 139.7	3 7/8 98.4	4 3/8 111.1	1 1/2 38.1	1/2 12.7	2 13/16 71.4	1 7/16 36.5	7/8 22.2	1 15/16 49.2	1 11/16 42.9	3/8	2.1 .96
1 3/16 1 1/4	NPMH-19T NPMH-20RT	MH-19T MH-20RT	ECC-19 ECC-19	4381 19487	1 11/16 42.9	6 1/2 165.1	4 7/16 112.7	5 1/16 128.6	1 7/8 47.6	9/16 14.3	3 3/8 85.7	1 9/16 39.7	15/16 23.8	2 3/16 55.6	1 3/4 44.5	1/2	3.8 1.70
1 1/4	NPMH-20T	MH-20T	ECC-23	5782 25718	1 7/8 47.6	6 9/16 166.7	4 11/16 119.1	5 5/16 134.9	1 7/8 47.6	5/8 15.9	3 3/4 95.3	1 3/4 44.5	1 1/16 27.0	2 7/16 61.9	1 7/8 47.6	1/2	4.6 2.08
1 7/16	NPMH-23T	MH-23T	ECC-23	5782 25718	1 7/8 47.6	6 9/16 166.7	4 11/16 119.1	5 5/16 134.9	1 7/8 47.6	5/8 15.9	3 3/4 95.3	1 3/4 44.5	1 1/16 27.0	2 9/16 65.1	1 7/8 47.6	1/2	4.5 2.02
1 1/2	NPMH-24T	MH-24T	ECC-24	7340 32648	1 15/16 49.2	7 1/4 184.2	4 7/8 123.8	5 7/8 149.2	2 1/8 54.0	11/16 17.5	3 15/16 100.0	2 50.8	1 1/4 31.8	2 11/16 68.3	2 1/6 52.4	1/2	5.7 2.57
1 11/16	NPMH-27T	MH-27T	ECC-27	7901 35144	2 1/8 54.0	7 1/2 190.5	5 7/16 138.1	6 1/16 154.0	2 1/8 54.0	11/16 17.5	4 1/4 108.0	2 50.8	1 1/4 31.8	2 15/16 74.6	2 1/16 52.4	1/2	6.4 2.88
1 15/16	NPMH-31T	MH-31T	ECC-31	7889 35090	2 1/4 57.2	8 1/8 206.4	6 152.4	6 1/2 165.1	2 3/8 60.3	3/4 19.1	4 9/16 115.9	2 3/32 53.2	1 11/32 34.1	3 3/8 85.7	2 1/16 52.4	5/8	8.0 3.62
2	NPMH-32T	MH-32T	ECC-35	9752 43377	2 1/2 63.5	8 5/8 219.1	6 1/2 165.1	7 177.8	2 3/8 60.3	11/16 17.5	4 15/16 125.4	2 1/4 57.2	1 3/8 34.9	3 1/2 88.9	2 15/64 56.8	5/8	9.9 4.50
2 3/16	NPMH-35T	MH-35T	ECC-35	9752 43377	2 1/2 63.5	8 5/8 219.1	6 1/2 165.1	7 177.8	2 3/8 60.3	11/16 17.5	4 15/16 125.4	2 1/4 57.2	1 3/8 34.9	3 5/8 92.1	2 15/64 56.8	5/8	9.6 4.37

*Closed End Cap part number is shown for Open End Cap. See page L-4 in the Accessories section.

For Replacement Lock Collar see page G-98.

SEALMASTER® Material Handling Bearings

Duty: Standard
Rolling Elements: Ball
Housing: Cast Iron Tapped Base
Self Alignment: +/- 1.5 Degrees
Lock: Setscrew
Seal: Contact Seal and Flinger
Temperature: -20° to 200°F
Relube: Plugged, Grease Fitting Included

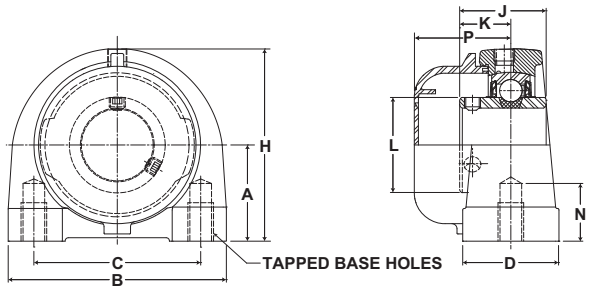

TBMH Series Tapped Base Pillow Block - Setscrew Locking

Bore Diameter inch	Part No.	Bearing Insert No.	Optional End Cap*	Basic Dynamic Rating lb/N	Dimensions inch / mm A	B	C	D	H	J	K	L	P	N Min. Tap Depth	Bolt UNC-2B Thread	Unit Wt. lb/kg
1	TBMH-16	MH-16	ECC-16	2801 12459	1 7/16 36.5	3 76.2	2 50.8	1 1/2 38.1	2 13/16 71.4	1 3/8 34.9	13/16 20.6	1 3/8 34.9	1 3/4 44.5	1/2 12.7	3/8-16	1.6 .72
1 3/16 1 1/4	TBMH-19 TBMH-20R	MH-19 MH-20R	ECC-19	4381 19487	1 3/4 44.5	4 101.6	3 76.2	1 1/2 38.1	3 13/32 86.5	1 1/2 38.1	7/8 22.2	1 19/32 40.5	1 49/64 44.8	5/8 15.9	7/16-14	2.9 1.30
1 1/4 1 7/16	TBMH-20 TBMH-23	MH-20 MH-23	ECC-23 ECC-23	5782 25718	1 7/8 47.6	4 1/4 108.0	3 1/4 82.6	1 7/8 47.6	3 3/4 95.3	1 11/16 42.9	1 25.4	1 55/64 47.2	1 7/8 47.6	3/4 19.1	1/2-13	3.9 1.75
1 1/2	TBMH-24	MH-24	ECC-24	7340 32648	1 15/16 49.2	4 5/8 117.5	3 1/2 88.9	1 7/8 47.6	3 15/16 100.0	1 15/16 49.2	1 3/16 30.2	2 1/16 52.4	2 3/32 53.2	3/4 19.1	1/2-13	4.6 2.10
1 11/16	TBMH-27	MH-27	ECC-27	7901 35144	2 1/8 54.0	5 127.0	3 3/4 95.3	2 50.8	4 1/4 108.0	1 15/16 49.2	1 3/16 30.2	2 19/64 58.3	2 5/32 54.8	3/4 19.1	1/2-13	5.7 2.57
1 15/16	TBMH-31	MH-31	ECC-31	7889 35090	2 1/4 57.2	5 1/2 139.7	4 101.6	2 50.8	4 5/8 117.5	2 1/32 51.6	1 9/32 32.5	2 15/32 62.7	2 1/8 53.9	7/8 22.2	5/8-11	6.7 3.05

*Closed End Cap part number is shown for Open End Cap. See page L-4 in the Accessories section.

Metric dimensions for reference only.
Not all parts are available from stock. Please contact customer service for availability (800) 626-2120.
For more information on bearing capabilities outside of our standard offering, please contact Application Engineering (800) 626-2093.

Material Handling Bearings

SEALMASTER®

Duty: Standard

Rolling Elements: Ball

Housing: Cast Iron Tapped Base

Self Alignment: +/- 1.5 Degrees

Lock: Skwezloc Locking Collar

Seal: Contact Seal and Flinger

Temperature: -20° to 200°F

Relube: Plugged, Grease Fitting Included

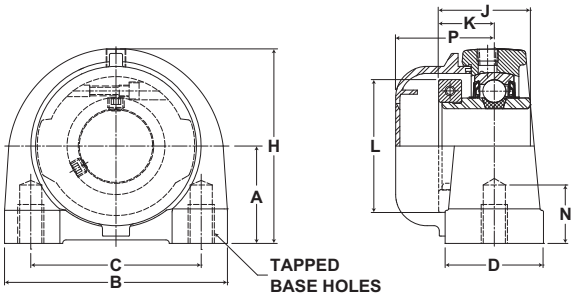

TBMH-T Series Tapped Base Pillow Block - Skwezloc Locking Collar

Bore Diameter inch	Part No.	Bearing Insert No.	Optional End Cap*	Basic Dynamic Rating lb/N	Dimensions inch / mm										Bolt UNC-2B Thread	Unit Wt. lb/kg
					A	B	C	D	H	J	K	L	P	N Min. Tap Depth		
1	TBMH-16T	MH-16T	ECC-16	2801 12459	1 7/16 36.5	3 76.2	2 50.8	1 1/2 38.1	2 13/16 71.4	1 7/16 36.5	7/8 22.2	1 15/16 49.2	1 3/4 44.5	1/2 12.7	3/8-16	1.7 .78
1 3/16 1 1/4	TBMH-19T TBMH-20RT	MH-19T MH-20RT	ECC-19	4381 19487	1 3/4 44.5	4 101.6	3 76.2	1 1/2 38.1	3 13/32 86.5	1 9/16 39.7	15/16 23.8	2 3/16 55.6	1 49/64 44.8	5/8 15.9	7/16-14	3.0 1.37
1 1/4	TBMH-20T	MH-20T	ECC-23	5782 25718	1 7/8 47.6	4 1/4 108.0	3 1/4 82.6	1 7/8 47.6	3 3/4 95.3	1 3/4 44.5	1 1/16 27.0	2 7/16 61.9	1 7/8 47.6	3/4 19.1	1/2-13	4.1 1.85
1 7/16	TBMH-23T	MH-23T	ECC-23	5782 25718	1 7/8 47.6	4 1/4 108.0	3 1/4 82.6	1 7/8 47.6	3 3/4 95.3	1 3/4 44.5	1 1/16 27.0	2 9/16 65.1	1 7/8 47.6	3/4 19.1	1/2-13	3.9 1.79
1 1/2	TBMH-24T	MH-24T	ECC-24	7340 32648	1 15/16 49.2	4 5/8 117.5	3 1/2 88.9	1 7/8 47.6	3 15/16 100.0	2 50.8	1 1/4 31.8	2 11/16 68.3	2 3/32 53.2	3/4 19.1	1/2-13	4.9 2.22
1 11/16	TBMH-27T	MH-27T	ECC-27	7901 35144	2 1/8 54.0	5 127.0	3 3/4 95.3	2 50.8	4 1/4 108.0	2 50.8	1 1/4 31.8	2 15/16 74.6	2 5/32 54.8	3/4 19.1	1/2-13	6.0 2.70
1 15/16	TBMH-31T	MH-31T	ECC-31	7889 35090	2 1/4 57.2	5 1/2 139.7	4 101.6	2 50.8	4 5/8 117.5	2 3/32 53.2	1 11/32 34.1	3 3/8 85.7	2 1/8 53.9	7/8 22.2	5/8-11	7.3 3.32

*Closed End Cap part number is shown for Open End Cap. See page L-4 in the Accessories section.
For Replacement Lock Collar see page G-98.

SEALMASTER® Material Handling Bearings

Duty: Standard
Rolling Elements: Ball
Housing: Cast Iron Four Bolt Flange
Self Alignment: +/- 1.5 Degrees
Lock: Setscrew
Seal: Contact Seal and Flinger
Temperature: -20° to 200°F
Relube: Plugged, Grease Fitting Included

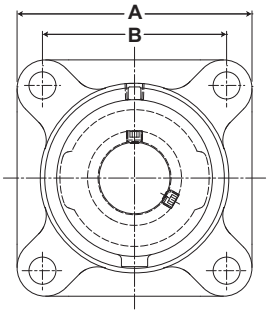

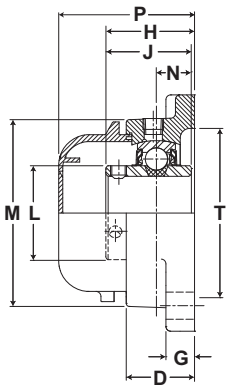

SFMH Series Standard Duty 4-Bolt Flange - Setscrew Locking

Bore Diameter inch	Part No.	Bearing Insert No.	Optional End Cap*	Basic Dynamic Rating lb/N	Dimensions inch / mm											Bolt Size	Unit Wt. lb/kg
					A	B	D	G	H	J	L	M	N	P	T		
1	SFMH-16	MH-16	ECC-16	2801 12459	3 3/4 95.3	2 3/4 69.9	1 1/32 26.2	17/32 13.5	1 7/16 36.5	1 3/8 34.9	1 3/8 34.9	2 23/32 69.1	9/16 14.3	2 19/64 58.3	2 3/8 60.3	7/16	1.9 .87
1 3/16 1 1/4R	SFMH-19 SFMH-20R	MH-19 MH-20R	ECC-19	4381 19487	4 1/4 108.0	3 1/4 82.6	1 11/64 29.8	17/32 13.5	1 9/16 39.7	1 1/2 38.1	1 19/32 40.5	3 7/32 81.8	5/8 15.9	2 27/64 61.5	2 7/8 73.0	7/16	2.7 1.23
1 1/4 1 7/16	SFMH-20 SFMH-23	MH-20 MH-23	ECC-23 ECC-23	5782 25718	4 5/8 117.5	3 5/8 92.1	1 11/32 34.1	9/16 14.3	1 3/4 44.5	1 11/16 42.9	1 55/64 47.2	3 23/32 94.5	11/16 17.5	2 43/64 67.8	3 5/16 84.1	1/2	3.7 1.68
1 1/2	SFMH-24	MH-24	ECC-24	7340 32648	5 1/8 130.2	4 101.6	1 1/2 38.1	9/16 14.3	2 1/64 51.2	1 15/16 49.2	2 1/16 52.4	4 5/64 103.6	3/4 19.1	2 15/16 74.6	3 1/2 88.9	1/2	4.8 2.18
1 11/16	SFMH-27	MH-27	ECC-27	7901 35144	5 3/8 136.5	4 1/8 104.8	1 9/16 39.7	9/16 14.3	2 3/64 52.0	1 15/16 49.2	2 19/64 58.3	4 21/64 109.9	3/4 19.1	3 76.2	3 3/8 85.7	1/2	5.4 2.43
1 15/16	SFMH-31	MH-31	ECC-31	7889 35090	5 5/8 142.9	4 3/8 111.1	1 9/16 39.7	9/16 14.3	2 5/32 54.8	2 1/32 51.6	2 15/32 62.7	4 33/64 114.7	3/4 19.1	2 63/64 75.8	4 101.6	9/16	5.7 2.60
2 2 3/16	SFMH-32 SFMH-35	MH-32 MH-35	ECC-35 ECC-35	9752 43377	6 3/8 161.9	5 1/8 130.2	1 3/4 44.5	13/16 20.6	2 5/16 58.7	2 3/16 55.6	2 23/32 69.1	5 3/16 131.8	7/8 22.2	3 23/64 85.3	4 1/4 108.0	5/8	9.9 4.48
2 7/16	SFMH-39	MH-39	ECC-39	11789 52437	6 7/8 174.6	5 5/8 142.9	1 15/16 49.2	13/16 20.6	2 11/16 68.3	2 34/61 65.0	2 63/64 75.8	5 7/16 138.1	1 25.4	3 45/64 94.1	4 1/4 108.0	5/8	10.6 4.80

*Closed End Cap part number is shown for Open End Cap. See page L-4 in the Accessories section.

Metric dimensions for reference only.
Not all parts are available from stock. Please contact customer service for availability (800) 626-2120.
For more information on bearing capabilities outside of our standard offering, please contact Application Engineering (800) 626-2093.

Duty: Standard
Rolling Elements: Ball
Housing: Cast Iron Four Bolt Flange
Self Alignment: +/- 1.5 Degrees
Lock: Skwezloc
Seal: Contact Seal and Flinger
Temperature: -20° to 200°F
Relube: Plugged, Grease Fitting Included

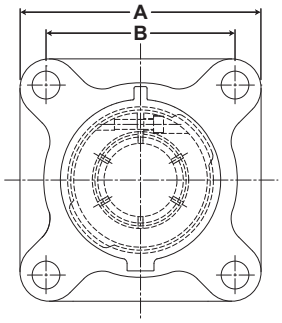

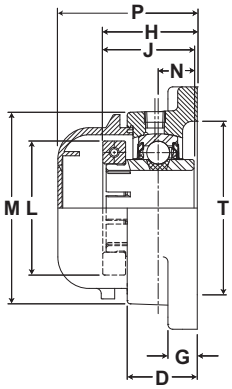

SFMH-T Series Standard Duty 4-Bolt Flange - Skwezloc Locking Collar

Bore Diameter inch	Part No.	Bearing Insert No.	Optional End Cap*	Basic Dynamic Rating lb/N	Dimensions inch / mm											Bolt Size	Unit Wt. lb/kg
					A	B	D	G	H	J	L	M	N	P	T		
1	SFMH-16T	MH-16T	ECC-16	2801 12459	3 3/4 95.3	2 3/4 69.9	1 1/32 26.2	17/32 13.5	1 1/2 38.1	1 7/16 36.5	1 15/16 49.2	2 23/32 69.1	9/16 14.3	2 19/64 58.3	2 3/8 60.3	7/16	2.0 .92
1 3/16 1 1/4R	SFMH-19T SFMH-20RT	MH-19T MH-20RT	ECC-19	4381 19487	4 1/4 108.0	3 1/4 82.6	1 11/64 29.8	17/32 13.5	1 5/8 41.3	1 9/16 39.7	2 3/16 55.6	3 7/32 81.8	5/8 15.9	2 27/64 61.5	2 7/8 73.0	7/16	2.9 1.31
1 1/4	SFMH-20T	MH-20T	ECC-23	5782 25718	4 5/8 117.5	3 5/8 92.1	1 11/32 34.1	9/16 14.3	1 13/16 46.0	1 3/4 44.5	2 7/16 61.9	3 23/32 94.5	11/16 17.5	2 43/64 67.8	3 5/16 84.1	1/2	3.9 1.78
1 7/16	SFMH-23T	MH-23T	ECC-23	5782 25718	4 5/8 117.5	3 5/8 92.1	1 11/32 34.1	9/16 14.3	1 13/16 46.0	1 3/4 44.5	2 9/16 65.1	3 23/32 94.5	11/16 17.5	2 11/16 68.3	3 5/16 84.1	9/16	3.8 1.72
1 1/2	SFMH-24T	MH-24T	ECC-24	7340 32648	5 1/8 130.2	4 101.6	1 1/2 38.1	9/16 14.3	2 5/64 52.8	2 50.8	2 11/16 68.3	4 5/64 103.6	3/4 19.1	2 15/16 74.6	3 1/2 88.9	1/2	5.1 2.30
1 11/16	SFMH-27T	MH-27T	ECC-27	7901 35144	5 3/8 136.5	4 1/8 104.8	1 9/16 39.7	9/16 14.3	2 7/64 53.6	2 50.8	2 15/16 74.6	4 21/64 109.9	3/4 19.1	3 76.2	3 7/8 98.4	1/2	5.7 2.56
1 15/16	SFMH-31T	MH-31T	ECC-31	7889 35090	5 5/8 142.9	4 3/8 111.1	1 9/16 39.7	9/16 14.3	2 7/32 56.4	2 3/32 53.2	3 3/8 85.7	4 33/64 114.7	3/4 19.1	2 63/64 75.8	4 101.6	9/16	6.3 2.88
2	SFMH-32T	MH-32T	ECC-35	9752 43377	6 3/8 161.9	5 1/8 130.2	1 3/4 44.5	13/16 20.6	2 3/8 60.3	2 3/32 53.2	3 1/2 88.9	5 3/16 131.8	7/8 22.2	3 23/64 85.3	4 1/4 108.0	5/8	10.5 4.74
2 3/16	SFMH-35T	MH-35T	ECC-35	9752 43377	6 3/8 161.9	5 1/8 130.2	1 3/4 44.5	13/16 20.6	2 3/8 60.3	2 1/4 57.2	3 5/8 92.1	5 3/16 131.8	7/8 22.2	3 23/64 85.3	4 1/4 108.0	5/8	10.9 4.94
2 7/16	SFMH-39T	MH-39T	ECC-39	11789 52437	6 7/8 174.6	5 5/8 142.9	1 15/16 49.2	13/16 20.6	2 11/16 68.3	2 34/61 65.0	4 1/8 104.8	1 25.4	5 7/16 138.1	3 45/64 94.1	4 1/4 108.0	5/8	11.7 5.32

*Closed End Cap part number is shown for Open End Cap. See page L-4 in the Accessories section.
For Replacement Lock Collar see page G-98.

SEALMASTER® Material Handling Bearings

Duty: Standard
Rolling Elements: Ball
Housing: Cast Iron Two Bolt Flange
Self Alignment: +/- 1.5 Degrees
Lock: Setscrew
Seal: Contact Seal and Flinger
Temperature: -20° to 200°F
Relube: Plugged, Grease Fitting Included

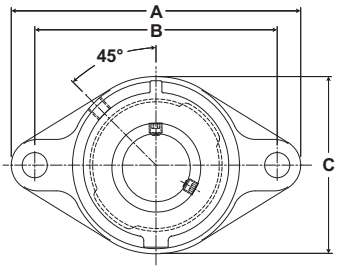

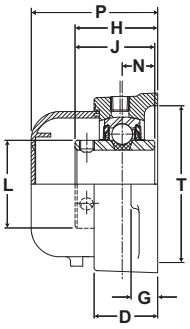

SFTMH Series Standard Duty 2-Bolt Flange - Setscrew Locking

Bore Diameter inch	Part No.	Bearing Insert No.	Optional End Cap*	Basic Dynamic Rating lb/N	Dimensions inch / mm											Bolt Size	Unit Wt. lb/kg
					A	B	C	D	G	H	J	L	N	P	T		
1	SFTMH-16	MH-16	ECC-16	2801 12459	4 7/8 123.8	3 57/64 98.8	2 3/4 69.9	1 1/32 26.2	17/32 13.5	1 7/16 36.5	1 3/8 34.9	1 3/8 34.9	9/16 14.3	2 19/64 58.3	2 3/8 60.3	7/16	1.4 .61
1 3/16 1 1/4R	SFTMH-19 SFTMH-20R	MH-19 MH-20R	ECC-19	4381 19487	5 9/16 141.3	4 19/32 116.7	3 1/4 82.6	1 11/64 29.8	17/32 13.5	1 9/16 39.7	1 1/2 38.1	1 19/32 40.5	5/8 15.9	2 27/64 61.5	2 7/8 73.0	7/16	2.0 0.92
1 1/4 1 7/16	SFTMH-20 SFTMH-23	MH-20 MH-23	ECC-23	5782 25718	6 1/8 155.6	5 1/8 130.2	3 3/4 95.3	1 11/32 34.1	9/16 14.3	1 3/4 44.5	1 11/16 42.9	1 55/64 47.2	11/16 17.5	2 43/64 67.8	3 5/16 84.1	1/2	3.2 1.45
1 1/2	SFTMH-24	MH-24	ECC-24	7340 32648	6 3/4 171.5	5 21/32 143.7	4 1/8 104.8	1 1/2 38.1	9/16 14.3	2 1/64 51.2	1 15/16 49.2	2 1/16 52.4	3/4 19.1	2 15/16 74.6	3 1/2 88.9	1/2	3.9 1.79
1 11/16	SFTMH-27	MH-27	ECC-27	7901 35144	7 1/16 179.4	5 27/32 148.4	4 3/8 111.1	1 9/16 39.7	9/16 14.3	2 3/64 52.0	1 15/16 49.2	2 19/64 58.3	3/4 19.1	3 76.2	3 7/8 98.4	9/16	4.4 2.00
1 15/16	SFTMH-31	MH-31	ECC-31	7889 35090	7 7/16 188.9	6 3/16 157.2	4 9/16 115.9	1 9/16 39.7	9/16 14.3	2 5/32 54.8	2 1/32 51.6	2 15/32 62.7	3/4 19.1	2 63/64 75.8	4 101.6	5/8	4.7 2.12
2 2 3/16	SFTMH-32 SFTMH-35	MH-32 MH-35	ECC-35	9752 43377	8 1/2 215.9	7 1/4 184.2	5 1/4 133.4	1 3/4 44.5	13/16 20.6	2 5/16 58.7	2 3/16 55.6	2 23/32 69.1	7/8 22.2	3 5/32 80.2	4 1/4 108.0	5/8	7.7 3.51

*Closed End Cap part number is shown for Open End Cap. See page L-4 in the Accessories section.

Metric dimensions for reference only.
Not all parts are available from stock. Please contact customer service for availability (800) 626-2120.
For more information on bearing capabilities outside of our standard offering, please contact Application Engineering (800) 626-2093.

Duty: Standard
Rolling Elements: Ball
Housing: Cast Iron Two Bolt Flange
Self Alignment: +/- 1.5 Degrees
Lock: Skwezloc Locking Collar
Seal: Contact Seal and Flinger
Temperature: -20° to 200°F
Relube: Plugged, Grease Fitting Included

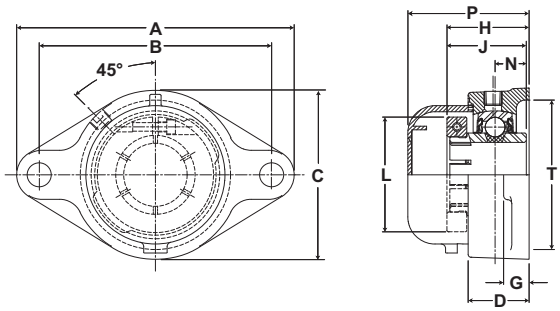

SFTMH-T Series Standard Duty 2-Bolt Flange - Skwezloc Locking Collar

Bore Diameter inch	Part No.	Bearing Insert No.	Optional End Cap*	Basic Dynamic Rating lb/N	Dimensions inch / mm											Bolt Size	Unit Wt. lb/kg
					A	B	C	D	G	H	J	L	N	P	T		
1	SFTMH-16T	MH-16T	ECC-16	2801 12459	4 7/8 123.8	3 57/64 98.8	2 3/4 69.9	1 1/32 26.2	17/32 13.5	1 1/2 38.1	1 7/16 36.5	1 15/16 49.2	9/16 14.3	2 19/64 58.3	2 3/8 60.3	7/16	1.5 .67
1 3/16 1 1/4R	SFTMH-19T SFTMH-20RT	MH-19T MH-20RT	ECC-19	4381 19487	5 9/16 141.3	4 19/32 116.7	3 1/4 82.6	1 11/64 29.8	17/32 13.5	1 5/8 41.3	1 9/16 39.7	2 3/16 55.6	5/8 15.9	2 27/64 61.5	2 7/8 73.0	7/16	2.2 .99
1 1/4	SFTMH-20T	MH-20T	ECC-23	5782 25718	6 1/8 155.6	5 1/8 130.2	3 3/4 95.3	1 11/32 34.1	9/16 14.3	1 13/16 46.0	1 3/4 44.5	2 7/16 61.9	11/16 17.5	2 43/64 67.8	3 5/16 84.1	1/2	3.5 1.58
1 7/16	SFTMH-23T	MH-23T	ECC-23	5782 25718	6 1/8 155.6	5 1/8 130.2	3 3/4 95.3	1 11/32 34.1	9/16 14.3	1 13/16 46.0	1 3/4 44.5	2 9/16 65.1	11/16 17.5	2 43/64 67.8	3 5/16 84.1	1/2	3.3 1.49
1 1/2	SFTMH-24T	MH-24T	ECC-24	7340 32648	6 3/4 171.5	5 21/32 143.7	4 1/8 104.8	1 1/2 38.1	9/16 14.3	2 5/64 52.8	2 50.8	2 11/16 68.3	3/4 19.1	2 15/16 74.6	3 1/2 88.9	1/2	4.2 1.91
1 11/16	SFTMH-27T	MH-27T	ECC-27	7901 35144	7 1/16 179.4	5 27/32 148.4	4 3/8 111.1	1 9/16 39.7	9/16 14.3	2 7/64 53.6	2 50.8	2 15/16 74.6	3/4 19.1	3 76.2	3 7/8 98.4	9/16	4.7 2.14
1 15/16	SFTMH-31T	MH-31T	ECC-31	7889 35090	7 7/16 188.9	6 3/16 157.2	4 9/16 115.9	1 9/16 39.7	9/16 14.3	2 7/32 56.4	2 3/32 53.2	3 3/8 85.7	3/4 19.1	2 63/64 75.8	4 101.6	5/8	5.3 2.39
2	SFTMH-32T	MH-32T	ECC-35	9752 43377	8 1/2 215.9	7 1/4 184.2	5 1/4 133.4	1 3/4 44.5	13/16 20.6	2 3/8 60.3	2 3/32 53.2	3 1/2 88.9	7/8 22.2	3 5/32 80.2	4 1/4 108.0	5/8	8.3 3.77
2 3/16	SFTMH-35T	MH-35T	ECC-35	9752 43377	8 1/2 215.9	7 1/4 184.2	5 1/4 133.4	1 3/4 44.5	13/16 20.6	2 3/8 60.3	2 1/4 57.2	3 5/8 92.1	7/8 22.2	3 5/32 80.2	4 1/4 108.0	5/8	8.1 3.66

*Closed End Cap part number is shown for Open End Cap. See page L-4 in the Accessories section.
For Replacement Lock Collar see page G-98.

SEALMASTER® Material Handling Bearings

Duty: Standard
Rolling Elements: Ball
Housing: Cast Iron Flange Bracket
Self Alignment: +/- 1.5 Degrees
Lock: Setscrew
Seal: Contact Seal and Flinger
Temperature: -20° to 200°F
Relube: Plugged, Grease Fitting Included

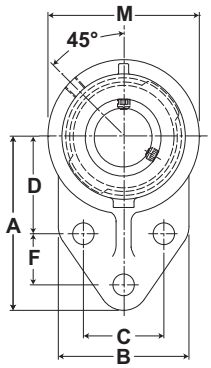

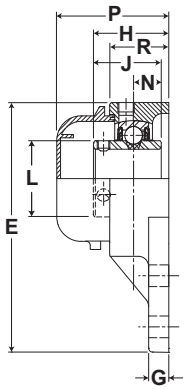

FBMH Series Standard Duty Flange Bracket - Setscrew Locking

Bore Diameter inch	Part No.	Bearing Insert No.	Optional End Cap*	Basic Dynamic Rating lb/N	Dimensions inch / mm														Bolt Size	Unit Wt. lb/kg
					A	B	C	D	E	F	G	H	J	L	M	N	P	R		
1	FBMH-16	MH-16	ECC-16	2801 12459	3 3/8 85.7	2 1/2 63.5	1 5/8 41.3	1 13/16 46.0	4 3/4 120.7	1 1/8 28.6	3/8 9.5	1 1/2 38.1	1 3/8 34.9	1 3/8 34.9	2 3/4 69.9	9/16 14.3	2 23/64 59.9	1 3/32 27.8	3/8	1.5 .68
1 3/16 1 1/4R	FBMH-19 FBMH-20R	MH-19 MH-20R	ECC-19	4381 19487	3 3/4 95.3	2 3/4 69.9	1 7/8 47.6	2 1/16 52.4	5 23/64 136.1	1 1/4 31.8	3/8 9.5	1 5/8 41.3	1 1/2 38.1	1 19/32 40.5	3 7/32 81.8	5/8 15.9	2 15/32 62.7	1 15/64 31.4	3/8	2.1 0.96
1 1/4 1 7/16	FBMH-20 FBMH-23	MH-20 MH-23	ECC-23	5782 25718	4 1/4 108.0	3 1/4 82.6	2 50.8	2 3/8 60.3	6 1/8 155.6	1 1/4 31.8	1/2 12.7	1 7/8 47.6	1 11/16 42.9	1 55/64 47.2	3 3/4 95.3	11/16 17.5	2 25/32 70.6	1 15/32 37.3	1/2	3.6 1.62
1 15/16	FBMH-31	MH-31	ECC-31	7889 35090	5 3/16 131.8	4 101.6	2 3/4 69.9	2 15/16 74.6	7 15/32 189.7	1 5/8 41.3	1/2 12.7	2 5/32 54.8	2 1/32 51.6	2 15/32 62.7	4 9/16 115.9	3/4 19.1	2 31/32 75.4	1 35/64 39.3	1/2	5.4 2.44

*Closed End Cap part number is shown for Open End Cap. See page L-4 in the Accessories section.

Metric dimensions for reference only.
Not all parts are available from stock. Please contact customer service for availability (800) 626-2120.
For more information on bearing capabilities outside of our standard offering, please contact Application Engineering (800) 626-2093.

Duty: Standard

Rolling Elements: Ball

Housing: Cast Iron Flange Bracket

Self Alignment: +/- 1.5 Degrees

Lock: Skwezloc Locking Collar

Seal: Contact Seal and Flinger

Temperature: -20° to 200°F

Relube: Plugged, Grease Fitting Included

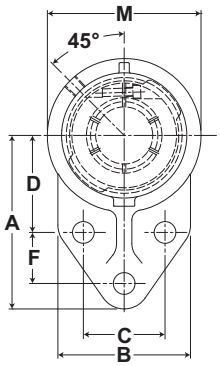

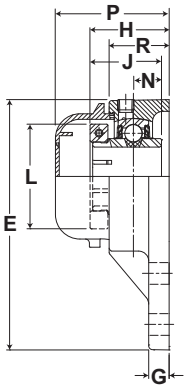

FBMH-T Series Standard Duty Flange Bracket - Skwezloc Locking Collar

Bore Diameter inch	Part No.	Bearing Insert No.	Optional End Cap*	Basic Dynamic Rating lb/N	Dimensions inch / mm														Bolt Size	Unit Wt. lb/kg
					A	B	C	D	E	F	G	H	J	L	M	N	P	R		
1	FBMH-16T	MH-16T	ECC-16	2801 12459	3 3/8 85.7	2 1/2 63.5	1 5/8 41.3	1 13/16 46.0	4 3/4 120.7	1 1/8 28.6	3/8 9.5	1 9/16 39.7	1 7/16 36.5	1 15/16 49.2	2 3/4 69.9	9/16 14.3	2 23/64 59.9	1 3/32 27.8	3/8	1.7 .75
1 3/16 1 1/4R	FBMH-19T FBMH-20RT	MH-19T MH-20RT	ECC-19	4381 19487	3 3/4 95.3	2 3/4 69.9	1 7/8 47.6	2 1/16 52.4	5 23/64 136.1	1 1/4 31.8	3/8 9.5	1 11/16 42.9	1 9/16 39.7	2 3/16 55.6	3 7/32 81.8	5/8 15.9	2 15/32 62.7	1 15/64 31.4	3/8	2.3 1.04
1 1/4	FBMH-20T	MH-20T	ECC-23	5782 25718	4 1/4 108.0	3 1/4 82.6	2 50.8	2 3/8 60.3	6 1/8 155.6	1 1/4 31.8	1/2 12.7	1 15/16 49.2	1 3/4 44.5	2 7/16 61.9	3 3/4 95.3	11/16 17.5	2 25/32 70.6	1 15/32 37.3	1/2	3.8 1.73
1 7/16	FBMH-23T	MH-23T	ECC-23	5782 25718	4 1/4 108.0	3 1/4 82.6	2 50.8	2 3/8 60.3	6 1/8 155.6	1 1/4 31.8	1/2 12.7	1 15/16 49.2	1 3/4 44.5	2 9/16 65.1	3 3/4 95.3	11/16 17.5	2 25/32 70.6	1 15/32 37.3	1/2	3.7 1.66
1 15/16	FBMH-31T	MH-31T	ECC-31	7889 35090	5 3/16 131.8	4 101.6	2 3/4 69.9	2 15/16 74.6	7 15/32 189.7	1 5/8 41.3	1/2 12.7	2 7/32 56.4	2 3/32 53.2	3 3/8 85.7	4 9/16 115.9	3/4 19.1	2 31/32 75.4	1 35/64 39.3	1/2	6.0 2.72

*Closed End Cap part number is shown for Open End Cap. See page L-4 in the Accessories section.

For Replacement Lock Collar see page G-98.

SEALMASTER® Material Handling Bearings

Duty: Standard
Rolling Elements: Ball
Housing: Cast Iron Wide Slot Take Up
Self Alignment: +/- 1.5 Degrees
Lock: Setscrew
Seal: Contact Seal and Flinger
Temperature: -20° to 200°F
Relube: Plugged, Grease Fitting Included

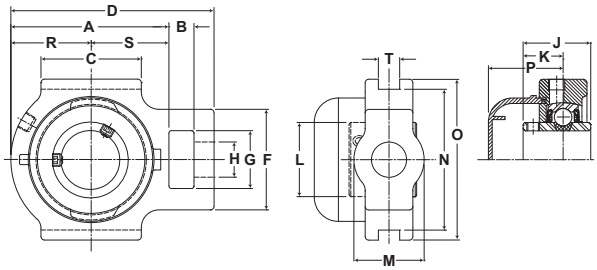

STMH Series Standard Duty Wide Slot Take Up - Setscrew Locking

Bore Diameter inch	Part No.	Bearing Insert No.	Optional End Cap*	Basic Dynamic Rating lb/N	Dimensions inch / mm																	Unit Wt. lb/kg
					A	B	C	D	F	G	H Core	J	K	L	M Hub	N	O	P	R	S	T	
1	STMH-16	MH-16	ECC-16	2801 12459	2 13/16 71.4	5/8 15.9	2 50.8	3 13/16 96.8	2 50.8	1 1/4 31.8	3/4 19.1	1 3/8 34.9	13/16 20.6	1 3/8 34.9	1 1/2 38.1	3 76.2	3 1/2 88.9	1 23/32 43.7	1 3/8 34.9	1 7/16 36.5	17/32	1.9 .88
1 3/16 1 1/4R	STMH-19 STMH-20R	MH-19 MH-20R	ECC-19	4381 19487	3 7/16 87.3	5/8 15.9	2 1/4 57.2	4 7/16 112.7	2 3/16 55.6	1 7/16 36.5	7/8 22.2	1 1/2 38.1	7/16 11.1	1 19/32 40.5	1 3/4 44.5	3 1/2 88.9	4 101.6	1 25/32 45.2	1 11/16 42.9	1 7/16 36.5	17/32	3.1 1.41
1 1/4 1 7/16	STMH-20 STMH-23	MH-20 MH-23	ECC-23	5782 25718	3 15/16 100.0	5/8 15.9	2 1/2 63.5	5 1/16 128.6	2 1/2 63.5	1 7/16 36.5	7/8 22.2	1 11/16 42.9	1 25.4	1 55/64 47.2	1 3/4 44.5	3 1/2 88.9	4 101.6	1 55/64 47.2	2 50.8	1 15/16 49.2	17/32	3.9 1.77
1 1/2	STMH-24	MH-24	ECC-24	7340 32648	4 5/16 109.5	3/4 19.1	3 1/4 82.6	5 11/16 144.5	3 1/4 82.6	1 15/16 49.2	1 1/8 28.6	1 5/16 33.3	1 3/16 30.2	2 1/16 52.4	2 1/8 54.0	4 101.6	4 1/2 114.3	1 63/64 50.4	2 3/16 55.6	2 1/8 54.0	11/16	3.8 1.71
1 11/16	STMH-27	MH-27	ECC-27	7901 35144	4 5/16 109.5	3/4 19.1	3 1/4 82.6	5 11/16 144.5	3 1/4 82.6	1 15/16 49.2	1 1/8 28.6	1 5/16 33.3	1 3/16 30.2	2 19/64 58.3	2 3/16 55.6	4 101.6	4 5/8 117.5	2 1/16 52.4	2 1/4 57.2	2 1/16 52.4	11/16	5.8 2.65
1 15/16	STMH-31	MH-31	ECC-31	7889 35090	4 1/2 114.3	3/4 19.1	3 3/8 85.7	5 7/8 149.2	3 1/4 82.6	1 15/16 49.2	1 1/8 28.6	2 1/32 51.6	1 9/32 32.5	2 15/32 62.7	2 3/16 55.6	4 101.6	4 5/8 117.5	2 1/16 52.4	2 5/16 58.7	2 3/16 55.6	11/16	5.8 2.64
2 2 3/16	STMH-32 STMH-35	MH-32 MH-35	ECC-35	9752 43377	5 127.0	1 25.4	3 3/4 95.3	6 3/4 171.5	4 101.6	2 1/2 63.5	1 3/8 34.9	2 3/16 55.6	1 5/16 33.3	2 23/32 69.1	2 1/4 57.2	5 1/8 130.2	5 3/4 146.1	2 5/16 58.7	2 9/16 65.1	2 7/16 61.9	1 1/16	6.1 2.78

*Closed End Cap part number is shown for Open End Cap. See page L-4 in the Accessories section.

Metric dimensions for reference only.
Not all parts are available from stock. Please contact customer service for availability (800) 626-2120.
For more information on bearing capabilities outside of our standard offering, please contact Application Engineering (800) 626-2093.

Material Handling Bearings

SEALMASTER®

Duty: Standard

Rolling Elements: Ball

Housing: Cast Iron Wide Slot Take Up

Self Alignment: +/- 1.5 Degrees

Lock: Skwezloc

Seal: Contact Seal and Flinger

Temperature: -20° to 200°F

Relube: Plugged, Grease Fitting Included

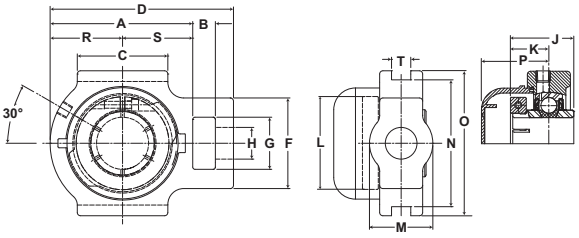

STMH-T Series Standard Duty Wide Slot Take Up - Skwezloc Locking Collar

Bore Diameter inch	Part No.	Bearing Insert No.	Optional End Cap*	Basic Dynamic Rating lb/N	Dimensions inch / mm																	Unit Wt. lb/kg
					A	B	C	D	F	G	H Core	J	K	L	M Hub	N	O	P	R	S	T	
1	STMH-16T	MH-16T	ECC-16	2801 12459	2 13/16 71.4	5/8 15.9	2 50.8	3 13/16 96.8	2 50.8	1 1/4 31.8	3/4 19.1	1 7/16 36.5	7/8 22.2	1 15/16 49.2	1 1/2 38.1	3 76.2	3 1/2 88.9	1 23/32 43.7	1 3/8 34.9	1 7/16 36.5	17/32	1.9 .88
1 3/16 1 1/4	STMH-19T STMH-20RT	MH-19T MH-20RT	ECC-19 ECC-19	4381 19487	3 7/16 87.3	5/8 15.9	2 1/4 57.2	4 7/16 112.7	2 3/16 55.6	1 7/16 36.5	7/8 22.2	1 9/16 39.7	15/16 23.8	2 3/16 55.6	1 3/4 44.5	3 1/2 88.9	4 101.6	1 25/32 45.2	1 11/16 42.9	1 3/4 44.5	17/32	3.1 1.41
1 1/4	STMH-20T	MH-20T	ECC-23	5782 25718	3 15/16 100.0	5/8 15.9	2 1/2 63.5	5 1/16 128.6	2 1/2 63.5	1 7/16 36.5	7/8 22.2	1 3/4 44.5	1 1/16 27.0	2 7/16 61.9	1 3/4 44.5	3 1/2 88.9	4 101.6	1 55/64 47.2	2 50.8	1 15/16 49.2	17/32	3.9 1.77
1 7/16	STMH-23T	MH-23T	ECC-23	5782 25718	3 15/16 100.0	5/8 15.9	2 1/2 63.5	5 1/16 128.6	2 1/2 63.5	1 7/16 36.5	7/8 22.2	1 3/4 44.5	1 1/16 27.0	2 9/16 65.1	1 3/4 44.5	3 1/2 88.9	4 101.6	1 55/64 47.2	2 50.8	1 15/16 49.2	17/32	3.8 1.71
1 1/2	STMH-24T	MH-24T	ECC-24	7340 32648	4 5/16 109.5	3/4 19.1	3 1/4 82.6	5 11/16 144.5	3 1/4 82.6	1 15/16 49.2	1 1/8 28.6	2 50.8	1 1/4 31.8	2 11/16 68.3	2 1/8 54.0	4 101.6	4 1/2 114.3	1 63/64 50.4	2 3/16 55.6	2 1/8 54.0	11/16	5.8 2.65
1 11/16	STMH-27T	MH-27T	ECC-27	7901 35144	4 5/16 109.5	3/4 19.1	3 1/4 82.6	5 11/16 144.5	3 1/4 82.6	1 15/16 49.2	1 1/8 28.6	2 50.8	1 1/4 31.8	2 15/16 74.6	2 3/16 55.6	4 101.6	4 5/8 117.5	2 1/16 52.4	2 1/4 57.2	2 1/16 52.4	11/16	5.8 2.64
1 15/16	STMH-31T	MH-31T	ECC-31	7889 35090	4 1/2 114.3	3/4 19.1	3 3/8 85.7	5 7/8 149.2	3 1/4 82.6	1 15/16 49.2	1 1/8 28.6	2 3/32 53.2	1 11/32 34.1	3 3/8 85.7	2 3/16 55.6	4 101.6	4 5/8 117.5	2 1/16 52.4	2 5/16 58.7	2 3/16 55.6	11/16	6.1 2.78
2	STMH-32T	MH-32T	ECC-35	9752 43377	5 127.0	1 25.4	3 3/4 95.3	6 3/4 171.5	4 101.6	2 1/2 63.5	1 3/8 34.9	2 1/4 57.2	1 3/8 34.9	3 1/2 88.9	2 1/4 57.2	5 1/8 130.2	5 3/4 146.1	2 5/16 58.7	2 9/16 65.1	2 7/16 61.9	1 1/16	9.9 4.50
2 3/16	STMH-35T	MH-35T	ECC-35	9752 43377	5 127.0	1 25.4	3 3/4 95.3	6 3/4 171.5	4 101.6	2 1/2 63.5	1 3/8 34.9	2 1/4 57.2	1 3/8 34.9	3 5/8 92.1	2 1/4 57.2	5 1/8 130.2	5 3/4 146.1	2 5/16 58.7	2 9/16 65.1	2 7/16 61.9	1 1/16	10.4 4.69

*Closed End Cap part number is shown for Open End Cap. See page L-4 in the Accessories section.

For Replacement Lock Collar see page G-98.

SEALMASTER® Material Handling Bearings

Duty: Standard
Rolling Elements: Ball
Lock: Setscrew
Seal: Contact Seal and Flinger
Temperature: -20° to 200°F

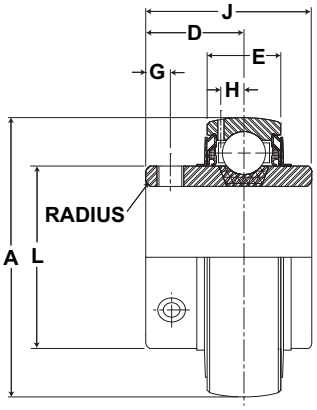

MH Series Standard Duty Insert - Setscrew Locking

Bore Diameter inch	Part No.	Dimensions inch / mm A	D	E	G	H	J	L	Max. Rad. To Clear	Setscrew Thread	Unit Wt. lb/kg
1	MH-16	2.0472 52.0	13/16 20.6	.591 15.0	7/32 5.6	5/32 4.0	1 3/8 34.9	1 3/8 34.9	.040 1.0	1/4-28	.6 .27
1 3/16 1 1/4	MH-19 MH-20R	2.4409 62.0	7/8 22.2	39/55 18.0	7/32 5.6	13/64 5.2	1 1/2 38.1	1 19/32 40.5	.040 1.0	1/4-28	.9 .41
1 1/4 1 7/16	MH-20 MH-23	2.8346 72.0	1 25.4	.748 19.0	1/4 6.4	15/64 6.0	1 11/16 42.9	1 55/64 47.2	.040 1.0	5/16-24	1.2 .54
1 1/2	MH-24	3.1496 80.0	1 3/16 30.2	.866 22.0	5/16 7.9	17/64 6.7	1 15/16 49.2	2 1/16 52.4	.062 1.6	5/16-24	1.5 .68
1 11/16	MH-27	3.3465 85.0	1 3/16 30.2	.866 22.0	5/16 7.9	17/64 6.7	1 15/16 49.2	2 19/64 58.3	.062 1.6	5/16-24	1.6 .73
1 15/16	MH-31	3.5433 90.0	1 9/32 32.5	.906 23.0	3/8 9.5	9/32 7.1	2 1/32 51.6	2 15/32 62.7	.062 1.6	3/8-24	1.8 .82
2 2 3/16	MH-32 MH-35	3.9370 100.0	1 5/16 33.3	.984 25.0	3/8 9.5	5/16 7.9	2 3/16 55.6	2 23/32 69.1	.080 2.0	3/8-24	2.3 1.04
2 7/16	MH-39	4.3303 110.0	1 9/16 39.6	1.060 26.9	7/16 11.1	21/64 8.3	2 9/16 65.0	2 63/64 75.8	.080 2.0	3/8-24	3.14 1.42

Metric dimensions for reference only.
Not all parts are available from stock. Please contact customer service for availability (800) 626-2120.
For more information on bearing capabilities outside of our standard offering, please contact Application Engineering (800) 626-2093.

Duty: Standard

Rolling Elements: Ball

Lock: Skwezloc Locking Collar

Seal: Contact Seal and Flinger

Temperature: -20° to 200°F

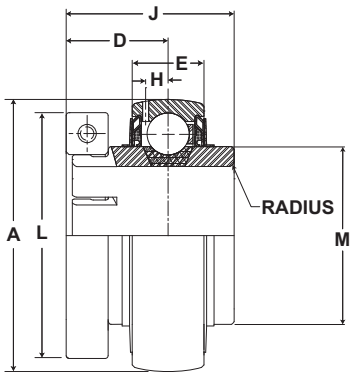

MH-T Series Standard Duty Insert - Skwezloc Locking Collar

Bore Diameter inch	Part No.	Dimensions inch / mm							Max. Rad. To Clear	Torx Cap Screw	Unit Wt. lb/kg
		A	D	E	H	J	L	M			
1	MH-16T	2.0472 52.0	7/8 22.2	19/32 15.1	5/32 4.0	1 7/16 36.5	1 15/16 49.2	1 3/8 34.9	.040 1.0	T-25	.8 .36
1 3/16 1 1/4	MH-19T MH20RT	2.4409 62.0	15/16 23.8	45/64 17.9	13/64 5.2	1 9/16 39.7	2 3/16 55.6	1 19/32 40.5	.040 1.0	T-25	1.1 .50
1 1/4	MH-20T	2.8346 72.0	1 1/16 27.0	3/4 19.1	15/64 6.0	1 3/4 44.5	2 7/16 61.9	1 55/64 47.2	.040 1.0	T-27	1.5 .68
1 7/16	MH-23T	2.8346 72.0	1 1/16 27.0	3/4 19.1	15/64 6.0	1 3/4 44.5	2 9/16 65.1	1 55/64 47.2	.040 1.0	T-27	1.5 .68
1 1/2	MH-24T	3.1496 80.0	1 1/4 31.8	7/8 22.2	17/64 6.7	2 50.8	2 11/16 68.3	2 1/16 52.4	.062 1.6	T-27	1.8 .82
1 11/16	MH-27T	3.3465 85.0	1 1/4 31.8	7/8 22.2	17/64 6.7	2 50.8	2 15/16 74.6	2 19/64 58.3	.062 1.6	T-27	1.9 .86
1 15/16	MH-31T	3.5433 90.0	1 11/32 34.1	29/32 23.0	9/32 7.1	2 3/32 53.2	3 3/8 85.7	2 15/32 62.7	.062 1.6	T-30	2.4 1.09
2	MH-32T	3.9370 90.0	1 3/8 34.1	63/64 23.0	5/16 7.1	2 1/4 53.2	3 1/2 85.7	2 23/32 62.7	.080 1.6	T-30	2.90 1.09
2 3/16	MH-35T	3.9370 100.0	1 3/8 34.9	63/64 25.0	5/16 7.9	2 1/4 57.2	3 5/8 92.1	2 23/32 69.1	.080 2.0	T-30	2.9 1.32
2 7/16	MH-39	4.3303 110.0	1 9/16 39.9	1 1/16 26.9	7/16 11.1	2 9/16 65.0	4 1/8 104.8	2 63/64 75.8	.080 2.0	T-45	3.14 1.42

For Replacement Lock Collar see page G-98.

Sealmaster Paver Bearings

Paver bearings utilize standard Sealmaster features and improved sealing technology to meet the continuing performance needs of industrial paving equipment. Paver bearings were developed by working closely with OEM's in order to provide reliability and uptime for these severe duty applications.

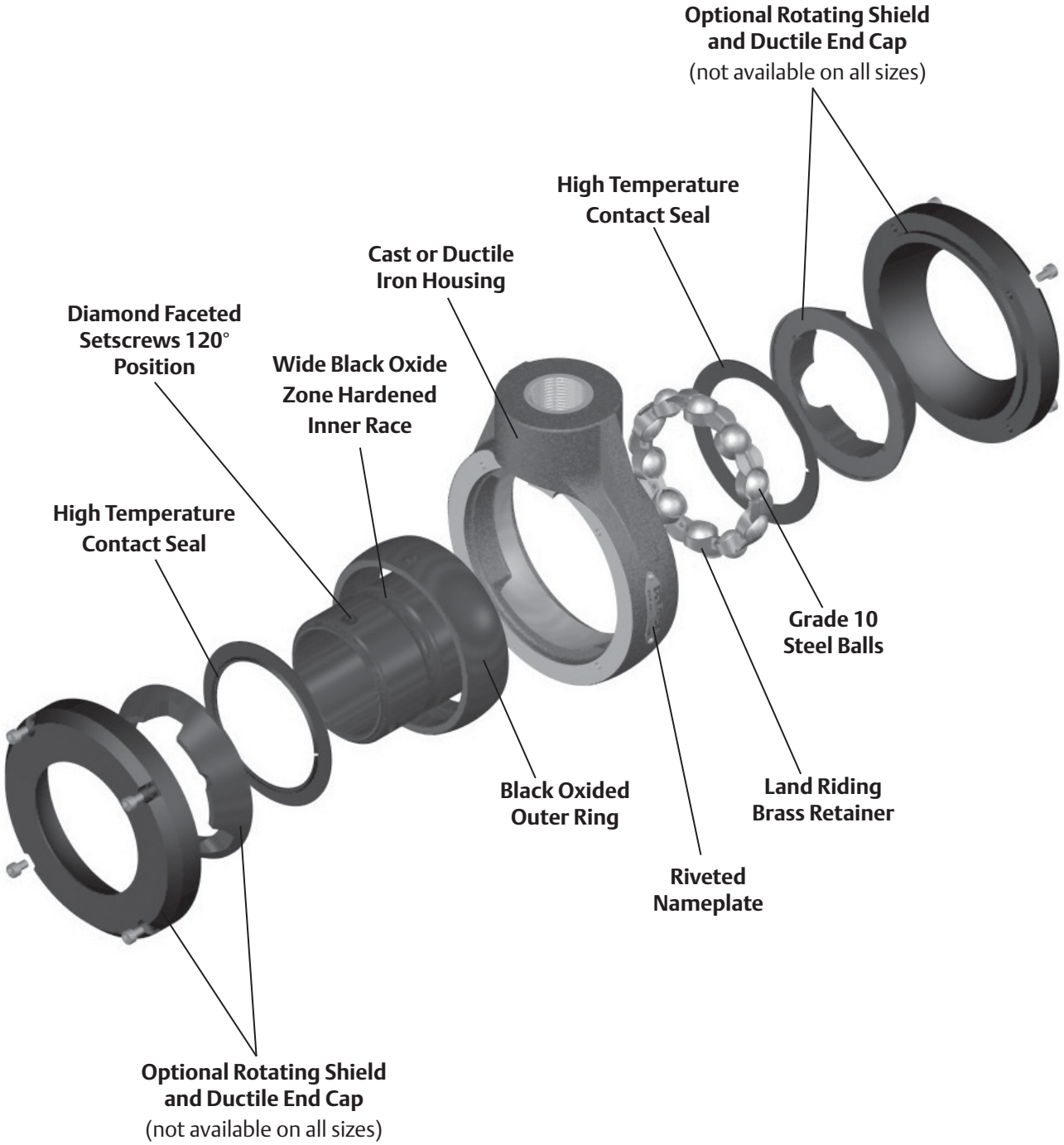

Paver Bearings Nomenclature

PVR
Paver Bearing

Paver Brand - Legacy*
1 - Blaw Knox
2 - Cedarapids
3 - Global/Allatt

Housing Style
1 - Piloted Flange
2 - Hanger
3 - Pillow Block - High Base
4 - Tapped Base Pillow Block
5 - 4 Bolt Flange
6 - 2 Bolt Flange
7 - Cylindrical Cartridge
8 - Wide Slot Take Up

Paver Bearing Part Number
00-99 - Sequential Number

PVR 1 2 03

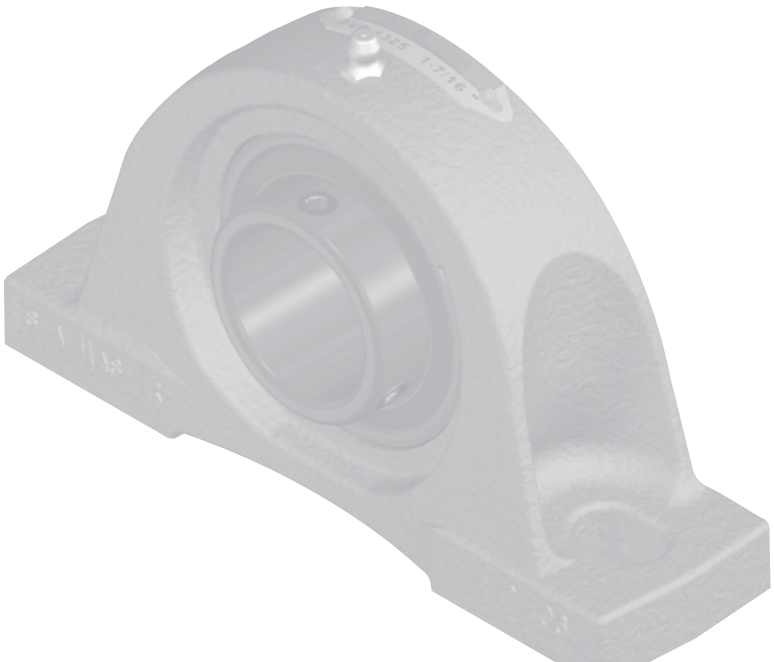

Features and Benefits

Sealmaster Paver Bearings have been developed in conjunction with original equipment manufacturers and features vary by part number. Some common features are listed below.

High Temperature Contact Seal

The double lip high temperature contact seal is the most popular design used, some designs incorporate a high temperature single lip contact seal , or combination of different seals for the front and back side of the bearing.

Nomex* Seal with Flinger

The Nomex seal provides a high temperature, tight labyrinth seal which retains lubrication and acts as a filter to exclude contamination. The external stamping is a flinger which shields the felt from large contaminants and directs them away from the sealing surface.

Ductile Iron End Cap

A tough, wear resistant end cap that helps keep asphalt from forcing its way into the bearing. The ductile-iron, bolt-on end cap mates with the casting providing the first barrier against abrasive asphalt.

Rotating Shield

The black oxided shield is fixed to the extended inner ring and precision machined to run with a small clearance with the end cap. The shield resists asphalt erosion and helps protect the inner sealing elements.

Self-Adjusting Washer

A conical-shaped mechanical seal is located directly behind the rotating shield supplying the bearing with a third contamination barrier. The stainless steel washer attaches to the bearing's inner ring.

*NOMEX is registered trademark of E.I. du Pont de Nemurs and Company. This trade name, trademark and/or registered trademark is property of their respective owner and is not owned or controlled by Regal Power Transmission Solutions.

Paver Bearings

SEALMASTER®

Duty: Varies
Rolling Elements: Ball
Housing: Pillow Block
Lock: Varies
Seal: Varies

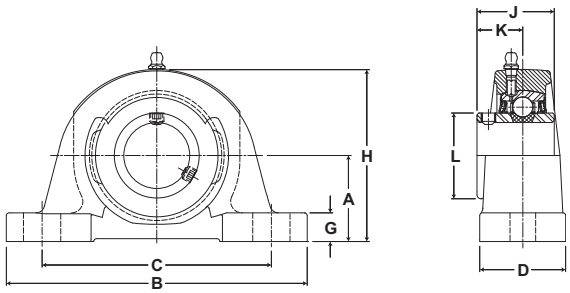

PVR x 3xx Pillow Block Assembly

Bore Diameter inch	Part No.	Dimensions inch / mm										Bolt Size	Unit Wt. lb/kg
		A	B	C min.	C max.	D	G	H	J	K	L		
1 1/8	PVR-1314	1 11/16 42.9	6 1/2 165.1	4 7/16 112.7	5 1/16 128.6	1 7/8 47.6	9/16 14.3	3 3/8 85.7	1 1/2 38.0	7/8 22.2	1 19/32 40.5	1/2	3.6 1.63
1 3/4	PVR-1325	2 1/8 54.0	7 1/2 190.5	5 7/16 138.1	6 1/16 154.0	2 1/8 54.0	11/16 17.5	4 1/4 108.0	1 15/16 49.2	1 3/16 30.2	2 19/64 58.3	1/2	6.5 2.95

Popular Paver bearing designs are listed, if you require information on another part number or size please consult Bearing Technical Customer Service.
The basic dimensions as listed are for guidance only, the image shown may not exactly represent the unit, many units have special machining or special casting designs.

Metric dimensions for reference only.
Not all parts are available from stock. Please contact customer service for availability (800) 626-2120.
For more information on bearing capabilities outside of our standard offering, please contact Application Engineering (800) 626-2093.

SEALMASTER® Paver Bearings

Duty: Varies
Rolling Elements: Ball
Housing: Tapped Base
Lock: Varies
Seal: Varies

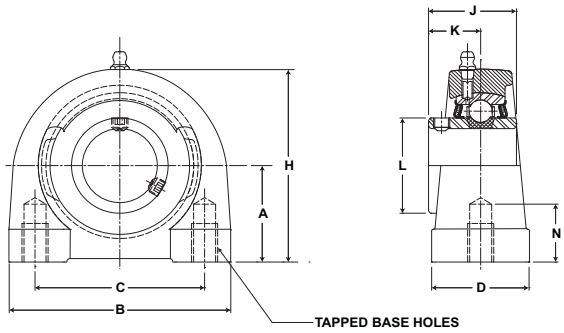

PVR x 4xx Tapped Base Pillow Block Assembly

Bore Diameter inch	Part No.	Dimensions inch / mm									Bolt UNC-2B Thread	Unit Wt. lb/kg
		A	B	C	D	H	J	K	L	N Min. Tap Depth		
1	PVR-1416	1 7/16 36.5	3 76.2	2 50.8	1 1/2 38.1	2 13/16 71.4	1 3/8 34.9	13/16 20.6	1 3/8 34.9	1/2 12.7	3/8-16	2.0 .91
1 7/16	PVR-1417	1 7/8 47.6	4 1/4 108.0	3 1/4 82.6	1 7/8 47.6	3 3/4 95.3	1 11/16 42.9	1 25.4	1 55/64 47.2	3/4 19.1	1/2-13	4.5 2.04
2	PVR-1450	2 1/4 57.2	5 127.0	4 101.6	2 50.8	4 5/8 117.5	2 1/32 51.6	1 9/32 32.5	2 15/32 62.7	7/8 22.2	5/8-11	8.0 3.63

Popular Paver bearing designs are listed, if you require information on another part number or size please consult Bearing Technical Customer Service.
The basic dimensions as listed are for guidance only, the image shown may not exactly represent the unit, many units have special machining or special casting designs.

Metric dimensions for reference only.
Not all parts are available from stock. Please contact customer service for availability (800) 626-2120.
For more information on bearing capabilities outside of our standard offering, please contact Application Engineering (800) 626-2093.

Paver Bearings

SEALMASTER®

Duty: Varies
Rolling Elements: Ball
Housing: Four Bolt Flange
Lock: Varies
Seal: Varies

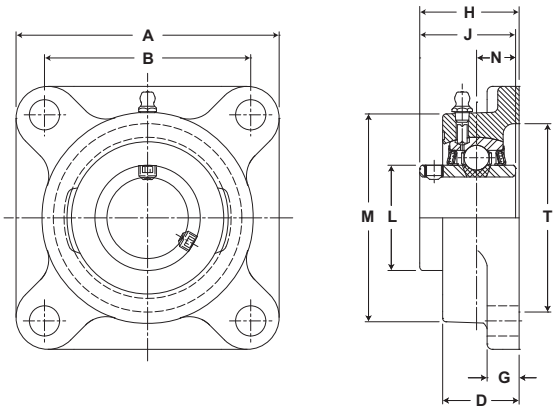

PVR x 5xx Four Bolt Flange Assembly

Bore Diameter inch	Part No.	Dimensions inch / mm										Bolt Size	Unit Wt. lb/kg
		A	B	D	G	H	J	N	L	M	T Core		
1 1/2	PVR-1504	5 1/8 130.2	4 101.6	1 1/2 38.1	9/16 14.3	2 1/64 51.2	1 15/16 49.2	3/4 19.1	2 1/16 52.4	4 5/64 103.6	3 1/2 88.9	1/2	5.5 2.49
1 9/16	PVR-1518	5 1/8 130.2	4 101.6	1 1/2 38.1	9/16 14.3	2 1/64 51.2	1 15/16 49.2	3/4 19.1	2 1/16 52.4	4 5/64 103.6	3 1/2 88.9	1/2	5.5 2.49
1 3/4	PVR-3546	5 3/8 136.5	4 1/8 104.8	1 9/16 39.7	9/16 14.3	2 3/64 52.0	1 15/16 49.2	3/4 19.1	2 19/64 58.3	4 11/32 110.3	3 7/8 98.4	9/16	5.7 2.59
1 3/4	PVR-1501	5 3/8 136.5	4 1/8 104.8	1 9/16 39.7	9/16 14.3	2 3/64 52.0	1 15/16 49.2	3/4 19.1	2 19/64 58.3	4 21/64 109.9	3 7/8 98.4	9/16	5.7 2.59
1 7/8	PVR-1509	5 5/8 142.9	4 3/8 111.1	1 9/16 39.7	9/16 14.3	2 5/32 54.8	2 1/32 51.6	3/4 19.1	2 15/32 62.7	4 33/64 114.7	4 101.6	9/16	6.4 2.90
2	PVR-1507	6 3/8 161.9	5 1/8 130.2	1 3/4 44.5	13/16 20.6	2 5/16 58.7	2 3/16 55.6	7/8 22.2	2 23/32 69.1	5 3/16 131.8	4 1/4 108.0	5/8	10.5 4.76
2 3/16	PVR-2533	5 3/4 146.1	4 7/16 112.7	1 3/4 44.5	13/16 20.6	2 3/8 60.3	2 3/16 55.6	7/8 22.2	3 5/8 92.1	5 3/16 131.8	4 1/4 108.0	9/16	11.1 5.03
2 3/16	PVR-2538	5 3/4 146.1	4 39/89 112.7	1 49/64 44.8	25/32 19.8	2 31/32 75.4	2 13/16 71.4	1 3/32 27.8	3 76.2	5 1/4 133.4	4 1/4 108.0	9/16	11.1 5.03
2 1/2	PVR-1551	7 3/8 187.3	5 7/8 149.2	2 5/16 58.7	11/16 17.5	3 76.1	2 3/4 69.9	1 1/16 27.0	3 7/16 87.3	6 1/8 155.6	5 1/8 130.2	5/8	16.4 7.44
2 11/16	PVR-1522	7 3/4 196.9	6 152.4	2 3/8 60.3	1 25.4	3 3/16 81.0	3 1/16 77.8	1 5/16 33.3	3 41/64 92.5	6 1/2 165.1	5 7/8 149.2	3/4	20.6 9.34

Popular Paver bearing designs are listed, if you require information on another part number or size please consult Bearing Technical Customer Service.
The basic dimensions as listed are for guidance only, the image shown may not exactly represent the unit, many units have special machining or special casting designs.

SEALMASTER® Paver Bearings

Duty: Varies
Rolling Elements: Ball
Housing: Two Bolt Flange
Lock: Varies
Seal: Varies

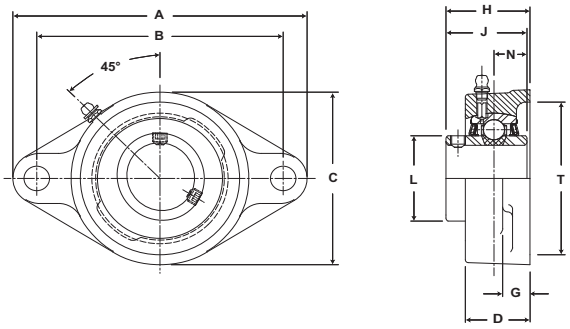

PVR x 6xx Two Bolt Flange Assembly

Bore Diameter inch	Part No.	Dimensions inch / mm										Bolt Size	Unit Wt. lb/kg
		A	B	C	D	G	H	J	N	L	T Core		
1 7/16	PVR-3647	6 1/8 155.6	5 1/8 130.2	3 3/4 95.3	1 11/32 34.1	9/16 14.3	1 3/4 44.5	1 11/16 42.9	11/16 17.5	1 27/32 46.8	3 5/16 84.1	1/2	3.2 1.45
1 9/16	PVR-1605	6 3/4 171.5	5 21/32 143.7	4 1/8 104.8	1 1/2 38.1	35/64 13.9	2 1/64 51.2	1 15/16 49.2	3/4 19.1	2 1/16 52.4	3 1/2 88.9	1/2	4.5 2.04
1 11/16	PVR-3648	7 1/16 179.4	5 27/32 148.4	4 3/8 111.1	1 9/16 39.7	9/16 14.3	2 3/64 52.0	1 15/16 49.2	3/4 19.1	2 5/16 58.7	3 7/8 98.4	9/16	5.0 2.27
1 3/4	PVR-1624	7 1/16 179.4	5 65/77 148.4	4 3/8 111.1	1 9/16 39.7	9/16 14.3	2 3/64 52.0	1 15/16 49.2	3/4 19.1	2 5/16 58.7	3 7/8 98.4	9/16	5.0 2.27
1 3/4	PVR-1626	7 7/16 188.9	6 16/85 157.2	4 9/16 115.9	1 9/16 39.7	9/16 14.3	2 5/32 54.8	2 1/32 51.6	3/4 19.1	2 15/32 62.7	4 101.6	9/16	5.6 2.54
1 7/8	PVR-1615	7 7/16 188.9	6 16/85 157.2	4 9/16 115.9	1 9/16 39.7	9/16 14.3	2 5/32 54.8	2 1/32 51.6	3/4 19.1	2 15/32 62.7	4 101.6	9/16	5.4 2.45
1 15/16	PVR-1608	7 7/16 188.9	6 16/85 157.2	4 9/16 115.9	1 9/16 39.7	9/16 14.3	2 5/32 54.8	2 1/32 51.6	3/4 19.1	2 15/32 62.7	4 101.6	9/16	5.4 2.45
2	PVR-1612	8 1/2 215.9	7 1/4 184.2	5 1/4 133.4	1 3/4 44.5	13/16 20.6	2 5/16 58.7	2 3/16 55.6	7/8 22.2	2 23/32 69.1	4 1/4 108.0	5/8	8.4 3.81

Popular Paver bearing designs are listed, if you require information on another part number or size please consult Bearing Technical Customer Service.
The basic dimensions as listed are for guidance only, the image shown may not exactly represent the unit, many units have special machining or special casting designs.

Metric dimensions for reference only.
Not all parts are available from stock. Please contact customer service for availability (800) 626-2120.
For more information on bearing capabilities outside of our standard offering, please contact Application Engineering (800) 626-2093.

Paver Bearings

SEALMASTER®

Duty: Varies
Rolling Elements: Ball
Housing: Flange Cartridge
Lock: Varies
Seal: Varies

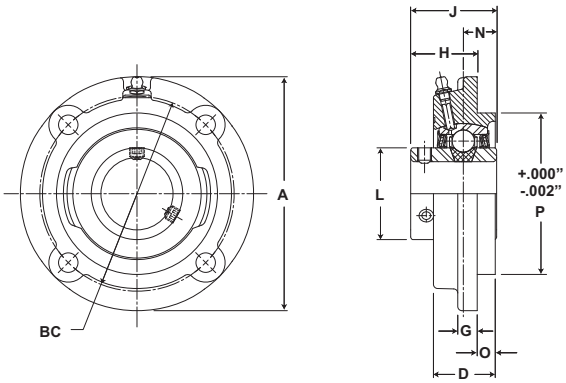

PVR x 1xx Piloted Flange Assembly

Bore Diameter inch	Part No.	Dimensions inch / mm										Bolt Size	End Cap	Unit Wt. lb/kg
		A	BC	D	G	H	J	L	N	O	P			
1 15/16	PVR-2137	6 1/8 155.6	5 1/8 130.2	1 25/64 35.3	61/64 24.2	2 50.8	2 1/32 51.6	2 15/32 62.7	23/32 18.3	7/16 11.1	4 1/4 108.0	7/16	No	7.1 3.22
2	PVR-1127	6 3/8 161.9	5 3/8 136.5	1 19/32 40.5	1 25.4	2 5/32 54.8	2 3/16 55.6	2 23/32 69.1	27/32 21.4	19/32 15.1	4 1/2 114.3	7/16	No	7.5 3.40
2 3/16	PVR-1102	7 3/4 196.9	6 1/2 165.1	1 43/64 42.5	9/16 14.3	2 3/8 60.3	2 9/16 65.1	2 63/64 75.8	1 25.4	5/16 7.9	5 1/4 133.4	1/2	Yes	10.5 4.76
2 3/16	PVR-1106	7 3/4 196.9	6 1/2 165.1	2 50.8	9/16 14.3	2 3/4 69.9	2 9/16 65.1	2 63/64 75.8	1 5/8 41.3	5/16 7.9	5 1/4 133.4	1/2	No	10.5 4.76
2 3/16	PVR-1113	7 3/4 196.9	6 1/2 165.1	2 50.8	9/16 14.3	2 3/8 60.3	2 9/16 65.1	2 63/64 75.8	1 25.4	5/16 7.9	5 1/4 133.4	1/2	No	10.5 4.76
2 3/16	PVR-1121	7 3/4 196.9	6 1/2 165.1	1 43/64 42.5	9/16 14.3	2 3/8 60.3	2 9/16 65.1	2 63/64 75.8	1 25.4	5/16 7.9	5 1/4 133.4	1/2	Yes	10.5 4.76
2 3/16	PVR-1128	7 3/4 196.9	6 1/2 165.1	2 50.8	9/16 14.3	2 3/8 60.3	2 9/16 65.1	2 63/64 75.8	1 25.4	5/16 7.9	5 1/4 133.4	1/2	No	10.5 4.76
2 3/16	PVR-3151	7 1/8 181.0	6 152.4	1 25/32 45.2	59/64 23.4	2 17/32 64.3	2 9/16 65.1	2 63/64 75.8	31/32 24.6	27/32 21.4	5 127.0	1/2	Yes	10.5 4.76

Popular Paver bearing designs are listed, if you require information on another part number or size please consult Bearing Technical Customer Service.
The basic dimensions as listed are for guidance only, the image shown may not exactly represent the unit, many units have special machining or special casting designs.

SEALMASTER® Paver Bearings

Duty: Varies
Rolling Elements: Ball
Housing: Hanger Bearing
Lock: Varies
Seal: Varies

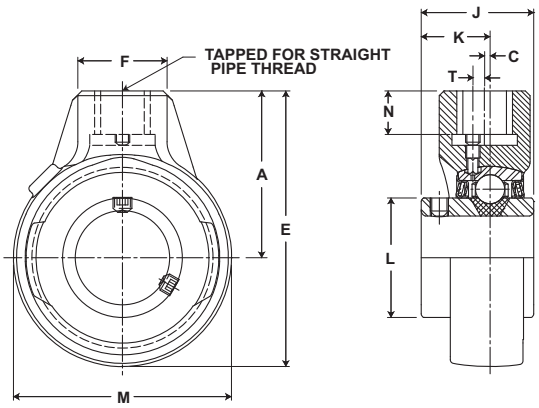

PVR x 2xx Hanger Bearing Assembly

Bore Diameter inch	Part No.	Dimensions inch / mm								Pipe Tap* N.P.S.M.	N Thread Length	Unit Wt. lb/kg
		A	C	E	F	J	K	L	M			
2	PVR-3245	3 1/4 82.6	3/16 4.8	5 7/16 138.1	1 7/8 47.6	2 1/32 51.6	1 9/32 32.5	2 15/32 62.7	4 3/8 111.1	1-11 1/2	13/16 20.6	4.5 2.04
2 7/16	PVR-3243	4 101.6	11/32 8.7	6 13/16 173.0	2 5/16 58.7	2 9/16 65.1	1 9/16 39.7	2 63/64 75.8	5 5/8 142.9	1 1/4-11 1/2	1 1/8 28.6	9.2 4.17
2 7/16	PVR-1229 PVR-1203	4 1/4 108.0	5/16 7.9	7 1/8 181.0	2 3/4 69.9	2 9/16 65.1	1 9/16 39.7	2 63/64 75.8	5 3/4 146.1	1 1/2-11 1/2	1 1/8 28.6	9.0 4.08
2 11/16	PVR-1219	4 5/8 117.5	3/8 9.5	7 7/8 200.0	2 3/4 69.9	3 1/16 77.8	1 3/4 44.5	3 41/64 92.5	6 1/2 165.1	1 1/2-11 1/2	1 1/4 31.8	14.6 6.62

Popular Paver bearing designs are listed, if you require information on another part number or size please consult Bearing Technical Customer Service.
The basic dimensions as listed are for guidance only, the image shown may not exactly represent the unit, many units have special machining or special casting designs.
*Use Straight Pipe Thread.

Metric dimensions for reference only.
Not all parts are available from stock. Please contact customer service for availability (800) 626-2120.
For more information on bearing capabilities outside of our standard offering, please contact Application Engineering (800) 626-2093.

Paver Bearings

SEALMASTER®

Duty: Varies
Rolling Elements: Ball
Housing: Cylindrical Cartridge
Lock: Varies
Seal: Varies

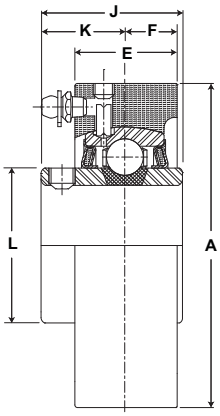

PVR x 7xx Cylindrical Cartridge Assembly

Bore Diameter	Part No.	Dimensions inch / mm						Unit Wt. lb/kg
inch		A ±.001	E	F	J	L	K	
1 3/4	PVR-1720	4.375 111.13	1 7/16 36.51	23/32 18.26	1 15/16 49.21	2 19/64 58.34	1 3/16 30.16	4.5 2.04

Popular Paver bearing designs are listed, if you require information on another part number or size please consult Bearing Technical Customer Service.
The basic dimensions as listed are for guidance only, the image shown may not exactly represent the unit, many units have special machining or special casting designs.

SEALMASTER® *Paver Bearings*

Original Equipment Manufacture Substitution Guide

Paver Manufacturer*	Model	Manufacturer Part No.	Sealmaster Part No.	Bearing Description	Location on Paver
Global/Allatt/Champion	Various	13031950	PVR-3840	Take up	Conveyor
Global/Allatt/Champion	Various	13031943	PVR-3841	Take up	Conveyor
Global/Allatt/Champion	Various	13031919	PVR-3142	Piloted Flange	Auger Inner
Global/Allatt/Champion	Various	13031091	PVR-3243	Hanger	Auger Outer
Global/Allatt/Champion	Various	13117833	PVR-3144	Piloted Flange	Auger Inner
Global/Allatt/Champion	Various	13054846	PVR-3245	Hanger	Auger Outer
Global/Allatt/Champion	575T	13116702	PVR-3546	4 Bolt Flange	Conveyor
Global/Allatt/Champion	575T	13131974	PVR-3647	2 Bolt Flange	Auger
Global/Allatt/Champion	575T	13038591	PVR-3648	2 Bolt Flange	Auger
Global/Allatt/Champion	Various	13031927	PVR-3149	Piloted Flange	Auger Inner
Global/Allatt/Champion	Various	13031091	PVR-3250	Hanger	Auger Outer
Global/Allatt/Champion	Various	13031919, 13117833	PVR-3151	Piloted Flange	Auger Inner
Blaw Knox	PF-400A	116-112	PVR-1711	AR Style	Auger Box
Blaw Knox	Various	116-099	PVR-1710	AR Style	Auger Box
Blaw Knox	PF-150/150H	116-118	PVR-1626	2 Bolt Flange	Auger Outer
Blaw Knox	PF-172/172B	116-119,116-026	PVR-1314	Pillow Block	Screed
Blaw Knox	Various	116-011,116-083	PVR-1325	Pillow Block	Screed
Blaw Knox	PF-115	116-036	PVR-1624	2 Bolt Flange	Auger/Conveyor Drive
Blaw Knox	PF-180/180H/180X	116-051	PVR-1612	2 Bolt Flange	Auger/Conveyor Drive
Blaw Knox	Various	116-093	PVR-1723	SC Cartridge	Auger Box
Blaw Knox	Various	116-092	PVR-1522	4 Bolt Flange	Chain Box
Blaw Knox	PF-115, PF-120H, PF-500	116-015, 116-034, 116-103	PVR-1504	4 Bolt Flange	Conveyor/Screed
Blaw Knox	PF-161, PF-180H	116-131	PVR-1113	Piloted Flange	Conveyor Drive Screed
Blaw Knox	PF-161, PF-410, PF-3172, PF-3180, PF-3200, PF-4410, PF-5500, PF-5510	116-139	PVR-1106	Piloted Flange	Conveyor Outer Rear
Blaw Knox	PF-161, PF-172/172B, PF-180/180X, PF-510,PF-200/200B, PF-410, PF-500, PF-3200, PF-4410,PF-3172, PF-3180, PF-5500, PF-5510	116-114	PVR-1229	Hanger	Auger Outer
Blaw Knox	PF-161, PF-172/172B, PF-180/180X, PF-200/200B, PF-410, PF-500, PF-510, PF-3200, PF-4410,PF-3172, PF-3180, PF-5500, PF-5510	116-123, 116-127, 116-129, 116-141	PVR-1203	Hanger	Auger Outer
Blaw Knox	PF-200/200B, PF-172/172B, PF-161, PF-410, PF-500, PF-510, PF-3172, PF-3180, PF-4410, PF-5500, PF-5510	116-113, 116-128, 116-130, 116-143	PVR-1128	Piloted Flange	Auger Inner/Conveyor Rear Inner
Blaw Knox	PF-200/200B, PF-172/172B, PF-161, PF-410, PF-500, PF-510, PF-3172, PF-3180, PF-4410, PF-5500, PF-5510	116-142	PVR-1102	Piloted Flange	Auger Inner/Conveyor Rear Inner

Original Equipment Manufacture Substitution Guide continued

Paver Manufacturer*	Model	Manufacturer Part No.	Sealmaster Part No.	Bearing Description	Location on Paver
Blaw Knox	PF-3200, PF-3180, PF-3172	116-144	PVR-1121	Piloted Flange	Auger Inner-Power Flight Auger
Blaw Knox	PF-115,PF-120H, PF-161, PF-172/172B, PF-180/180X, PF-200/200B, PF-410, PF-510, PF-3180, PF-3200, PF-4410, PF-5500, PF-5510	116-035, 116-070, 116-071, 116-072, 116-133, 116-137, 116-138	PVR-1501	4 Bolt Flange	Conveyor
Blaw Knox	PF-150/150H	116-117	PVR-1720	SC Cartridge	Auger Inner/Conveyor Drive
Blaw Knox	Various	115-328,116-094	PVR-1219	Hanger	Auger Outer
Blaw Knox	Various	116-068,116-109	PVR-1518	4 Bolt Flange	Auger
Blaw Knox	PF-115	116-063	PVR-1509	4 Bolt Flange	Conveyor
Blaw Knox	PF-180/180H	116-032,116-041	PVR-1507	4 Bolt Flange	Conveyor
Blaw Knox	PF-115, PF120H, PF-161, PF-180/180X	116-033	PVR-1127	Piloted Flange	Conveyor
Blaw Knox	PF-180H, PF-120	116-031,116-090	PVR-1608	2 Bolt Flange	Auger/Conveyor Drive
Blaw Knox	Various	116-069	PVR-1605	2 Bolt Flange	Auger
Blaw Knox	PF-115, PF-400A	116-064,116-122	PVR-1615	2 Bolt Flange	Auger
Blaw Knox	Various	116-145	PVR-1416	Tapped Base	Screed
Blaw Knox	PF-150/150H	116-067	PVR-1417	Tapped Base	Conveyor Front
Blaw Knox	Various	116-098	PVR-1450	Tapped Base	Conveyor
Blaw Knox	Various	116-091	PVR-1551	4 Bolt Flange	Conveyor
Blaw Knox	Road Wideners	116-095	MSF-28	4 Bolt Flange	Conveyor
Blaw Knox	Road Wideners	116-084	MSF-24	4 Bolt Flange	Conveyor
Blaw Knox	Most	115-021	ER-23	ER Style	Push Roller
Cedarapids	Various	45134-010-37	PVR-2431	Tapped Base	Auger Inner
Cedarapids	Various	45134-010-41	PVR-2130	Piloted Flange	Auger Inner
Cedarapids	Various	45134-010-39	PVR-2432	Tapped Base	Auger Remix
Cedarapids	Various	45134-010-47	PVR-2533	4 Bolt Flange	Conveyor
Cedarapids	CR-351	45134-010-40	PVR-2534	4 Bolt Flange	Conveyor
Cedarapids	CR-351, CR-451, CR-461, CR-551, CR-561	F0115-FGA	PVR-2535	4 Bolt Flange	Conveyor
Cedarapids	Various	45134-010-37	PVR-2436	Tapped Base	Auger Outer
Cedarapids	Various	45134-010-41	PVR-2137	Piloted Flange	Auger Inner
Cedarapids	Various	45134-010-47, F0203FGA	PVR-2538	4 Bolt Flange	Conveyor
Cedarapids	CR-351, CR-451, CR461, CR-551, CR-561	45134-010-40, F0115-FGA	PVR-2539	4 Bolt Flange	Conveyor

Browning Mounted Ball Bearings

Browning mounted ball bearings feature multiple housing styles, materials and configurations, an extended inner race insert bearing with ball riding nylon retainer. The insert features a rivet to prevent outer ring rotation and is available with setscrew, eccentric, or BOA concentric locking collar. The contact seal, with black oxide treated flinger provides a good balance between contaminant resistance, grease loss and friction. Depending on your preference, these bearings are available in inch and metric bore with a wide variety of cast iron, stamped steel or rubber mount housings or specific industry solutions as illustrated on the pages to follow.

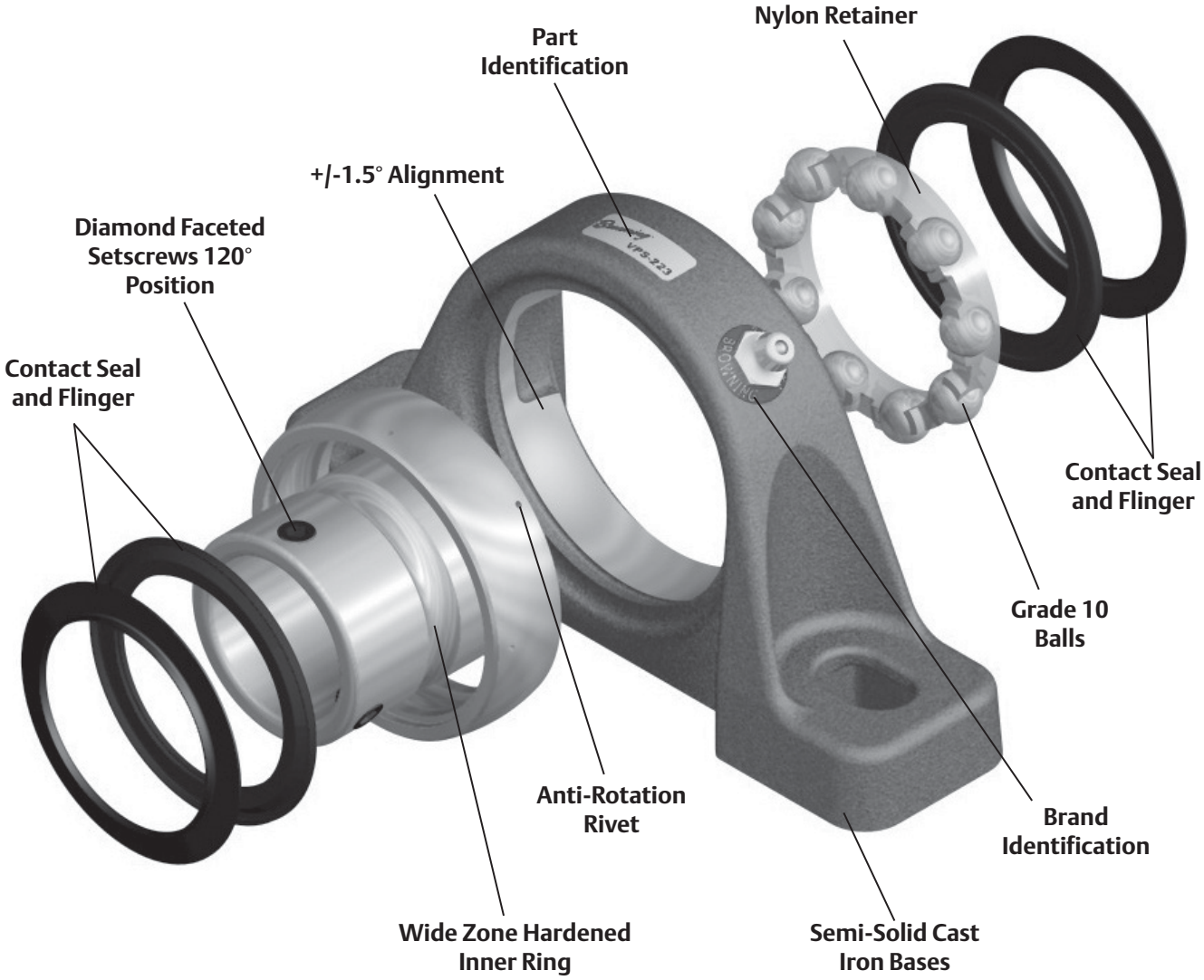

Browning Mounted Ball Nomenclature Housing Units

VP S-1 16 M AH

Housing Styles* (see below)

Locking Option
- B - BOA Concentric
- E - Eccentric
- S - Setscrew

Bearing Duty
- Omit for Metric
- 1 - Light or Intermediate Duty / 100 Series
- 2 - Standard Duty / 200 Series
- 3 - Medium Duty / 300 Series

Bore Size
- Inch - ##/16 (ex. 20/16 = 1 1/4”)
  - S for 1 1/4” and 2” Reduced
- Metric - ex. 25 MM

Material Option
- M - Malleable 2 Bolt and 4 Bolt
  - 100 Series only

Common Option
- AH - Air Handling
- CTY - Plugged Lubed Hole
- CSK - 90° Lube Fitting
- S-#### - Special Design

Housing	Housing Style	Material
RUBR	Grommet	Rubber
SSF2	Two Bolt Flange	Stamped Steel
SSF3	Three Bolt Flange	Stamped Steel
SSF3T	Three Bolt Flange	Stamped Steel
SSF4	Four Bolt Flange	Stamped Steel
SSP	Pillow Block	Stamped Steel
SSRP	Pillow Block	Stamped Steel / Rubber
VF2	Two Bolt Flange	Cast Iron
VF3	Three Bolt Flange	Cast Iron
VF4	Four Bolt Flange	Cast Iron
VFB	Flange Bracket	Cast Iron
VFC	Piloted Flange Cartridge	Cast Iron
VP	Pillow Block - High Base	Cast Iron
VPD	Pillow Block - Alternate Base	Cast Iron
VPL	Pillow Block - Low Base	Cast Iron
VTB	Tapped Base Pillow Block	Cast Iron
VTW	Wide Slot Take Up	Cast Iron

*Note: Configurations are not available in all sizes or housing styles. Consult the product tables, option sections and engineering sections for more detail or consult a Bearing Application Engineer.

Browning Mounted Ball Nomenclature Inserts

V S-2 24 S####

Prefix
- V - Spherical O.D. Bearing Insert
- L - Spherical O.D. Bearing Insert - No Relube
- LR - Spherical O.D. Bearing Insert - No Relube
- LRS - Spherical O.D. Bearing Insert - No Relube
- SL - Cylindrical O.D. Bearing Insert - No Relube

Locking Option
- B - BOA Concentric
- E - Eccentric
- S - Setscrew

Insert Duty
- Omit for Metric
- 1 - Light or Intermediate Duty / 100 Series
- 2 - Standard Duty / 200 Series
- 3 - Medium Duty / 300 Series

Bore Size
- Inch - ##/16 (ex. 20/16 = 1 1/4”)
  - S for 1 1/4” and 2” Reduced
- Metric - ex. 25 MM

Options
- SK### - Special Design

*Note: Configurations are not available in all sizes or housing styles. Consult the product tables, option sections and engineering sections for more detail or consult a Bearing Application Engineer.

Browning Mounted Ball Nomenclature Take Up Frame

6 SF 16

Adjustment Length

1 - 1 1/2”
3 - 3”
6 - 6”
9 - 9”
12 - 12”
18 - 18”

Frame Design

SF - Center Pull Take Up
TF/TFS - Top Mount Protected Screw Take Up

Frame Series

Bore Size	Frame Size
3/4” to 1”	16
1 1/8” to 1 7/16”	23
1 1/2” to 2”	31
2” to 2 3/16”	39

Browning® Mounted Ball Bearings

Features and Benefits

Multiple Methods Locking

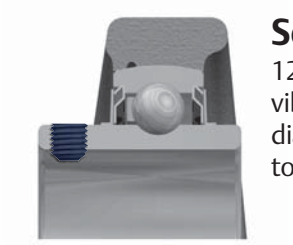

Setscrew Locking

120° spaced, balanced three point contact minimizes inner ring distortion vibration, reduces noise, and improves reliability. Precision manufactured diamond faceted setscrews contribute to improved clamping and resistance to back out.

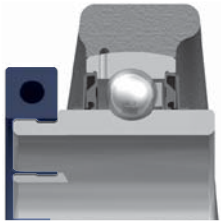

BOA Concentric

BOA is a concentric locking collar clamp design that results in near-perfect concentricity of the shaft to the bearing bore and maintains near perfect ball path roundness, while reducing fretting corrosion. This design eliminates the shaft damage of setscrew locking, and minimizes bearing induced vibration for smoother quieter operation. The collar has a TORX head cap screw that outlasts stripping 12 times longer than hex head cap screws.

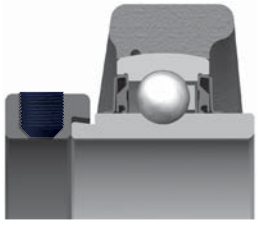

Eccentric Locking

Eccentric locking design incorporates a precision eccentric collar to mate with the inner ring extension for shaft hold.

Note: The eccentric is designed for single direction of rotation and should not be used when two direction rotation is present.

Sealing

Positive contact molded nitrile rubber contact seal with an auxiliary flinger element standard. The contact seal allows grease purge and helps keep contamination out of the bearing while the flinger provides a rotating shield that helps direct contamination away from the seal.

Anti-Rotation Rivet

An anti-rotation rivet prevents outer ring creep, or rotation, within the housing.

Features and Benefits continued

Semi-Solid Cast Iron Base

The rugged base design provides an excellent mounting foundation. This is integral to prevent sheet metal "buckling"

Zone Hardening Inner Race

Browning incorporates a unique heat treat process that hardens the inner race only where it is needed...under the ball path. The zone hardened inner race results in improved lock reliability as a result of less distortion at setscrew location and improved thread conformity resulting in improved clamping and resistance to setscrew back-out.

Identification Marking

Browning cast iron housing bearing units have a sticker with part description and brand washer under the lubrication fitting. This allows for easy verification of the part number during installation and for replacement.

Air Handling "AH" Option

The Browning Air Handling mounted ball bearing has the same features as the standard Browning mounted ball bearing expect for the following air handling features.

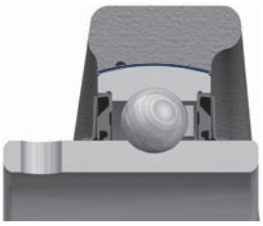

AH Housing Fit

Air Handling "AH" ball bearings are manufactured with a controlled housing fit that allows the bearing to properly self-align when mounted on lightweight frames commonly found on air handling equipment.

Noise Test

All Air Handling "AH" bearings must pass a two stage noise testing verification for quiet operation to meet the noise level standards of the air handling industry.

Popular shaft sizes and housing configurations in the normal and medium duty series are available "off-the-shelf" these air handling features (designated by the AH suffix). These products are offered in both setscrew and BOA concentric locking.

Browning®

Mounted Ball Bearings

Duty: Intermediate
Rolling Elements: Ball
Housing: Cast Iron Pillow Block
Self Alignment: +/- 1.5 Degrees
Lock: Setscrew
Seal: Contact
Temperature: -20° to 200°F

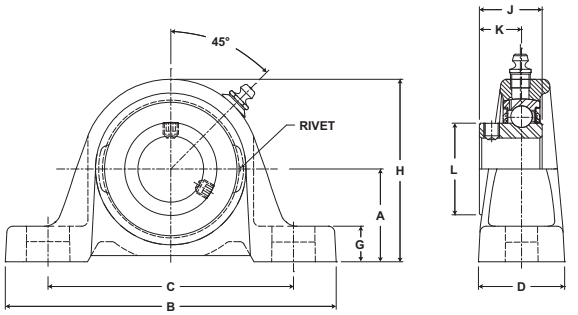

VPS 100 Series Intermediate Duty Pillow Blocks - Setscrew Locking

Bore Diameter inch	Part No.	Bearing Insert No.	Basic Dynamic Rating lb/N	Dimensions inch / mm A	B	C min.	C max.	D	G	H	J	K	L	Bolt Size	Unit Wt. lb/kg
1/2 5/8	VPS-108 VPS-110	VS-108 VS-110	2108 9377	1 3/16 30.2	4 7/8 123.8	3 1/8 79.4	4 1/8 104.8	1 7/32 31.0	15/32 11.9	2 7/32 56.4	15/16 23.8	5/8 15.9	31/32 24.6	3/8	.80 .36
3/4	VPS-112	VS-1112	2611 11614	1 5/16 33.3	5 127.0	3 15/32 88.1	4 9/32 108.7	1 11/32 34.1	17/32 13.5	2 17/32 64.3	1 1/16 27.0	23/32 18.3	1 3/16 30.2	3/8	1.4 .64
7/8 15/16 1	VPS-114 VPS-115 VPS-116	VS-114 VS-115 VS-116	2801 12459	1 7/16 36.5	5 1/2 139.7	3 11/16 93.7	4 9/16 115.9	1 13/32 35.7	19/32 15.1	2 13/16 71.4	1 7/64 28.2	49/64 19.4	1 3/8 34.9	3/8	1.6 .73
1 1/8 1 3/16 1 1/4	VPS-118 VPS-119 VPS-120S	VS-118 VS-119 VS-120S	4381 19487	1 11/16 42.9	6 3/16 157.2	4 3/16 106.4	5 1/16 128.6	1 3/4 44.5	21/32 16.7	3 9/32 83.3	1 5/32 29.4	25/32 19.8	1 19/32 40.5	1/2	2.6 1.18
1 1/4 1 3/8 1 7/16	VPS-120 VPS-122 VPS-123	VS-120 VS-122 VS-123	5782 25718	1 7/8 47.6	6 3/4 171.5	4 5/8 117.5	5 3/8 136.5	1 3/4 44.5	23/32 18.3	3 11/16 93.7	1 9/32 32.5	55/64 21.8	1 55/64 47.2	1/2	3.5 1.59
1 1/2	VPS-124	VS-124	7340 32648	2 50.8	7 1/8 181.0	4 7/8 123.8	5 7/8 149.2	1 15/16 49.2	13/16 20.6	4 101.6	1 27/64 36.1	15/16 23.8	2 1/16 52.4	1/2	4.4 2.00
1 11/16 1 3/4	VPS-127 VPS-128	VS-127 VS-128	7901 35144	2 1/8 54.0	7 3/8 187.3	5 1/4 133.4	6 1/16 154.0	2 50.8	3/4 19.1	4 1/4 108.0	1 7/16 36.5	61/64 24.2	2 19/64 58.3	1/2	5.3 2.40
1 15/16 2	VPS-131 VPS-132S	VS-131 VS-132S	7889 35090	2 1/4 57.2	8 203.2	5 7/8 149.2	6 1/2 165.1	2 3/16 55.6	3/4 19.1	4 9/16 115.9	1 35/64 39.3	1 3/64 26.6	2 15/32 62.7	5/8	5.8 147.3
2 2 3/16	VPS-132 VPS-135	VS-132 VS-135	9752 43377	2 1/2 63.5	8 13/16 223.8	6 9/16 166.7	7 5/16 185.7	2 5/16 58.7	7/8 22.2	4 31/32 126.2	1 21/32 42.1	1 7/64 28.2	2 23/32 69.1	5/8	7.7 3.49

Metric dimensions for reference only.
Not all parts are available from stock. Please contact customer service for availability (800) 626-2120.
For more information on bearing capabilities outside of our standard offering, please contact Application Engineering (800) 626-2093.

Mounted Ball Bearings

Duty: Intermediate
Rolling Elements: Ball
Housing: Cast Iron Pillow Block
Self Alignment: +/- 1.5 Degrees
Lock: Eccentric
Seal: Contact
Temperature: -20° to 200°F

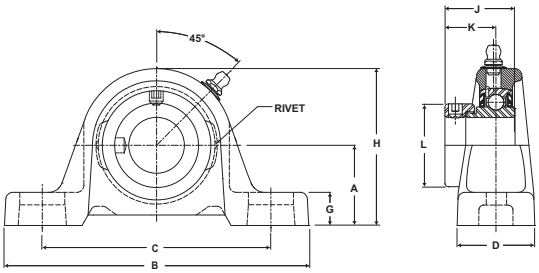

VPE 100 Series Intermediate Duty Pillow Blocks - Eccentric Locking

Bore Diameter inch	Part No.	Bearing Insert No.	Basic Dynamic Rating lb/N	Dimensions inch / mm A	B	C min.	C max.	D	G	H	J	K	L	Bolt Size	Unit Wt. lb/kg
1/2 5/8	VPE-108 VPE-110	VE-108 VE-110	2108 9377	1 3/16 30.2	4 7/8 123.8	3 1/8 79.4	4 1/8 104.8	1 7/32 31.0	15/32 11.9	2 7/32 56.4	1 3/16 30.2	7/8 22.2	1 3/16 30.2	3/8	1.0 .45
3/4	VPE-112	VE-112	2611 11614	1 5/16 33.3	5 127.0	3 15/32 88.1	4 9/32 108.7	1 11/32 34.1	17/32 13.5	2 17/32 64.3	1 17/64 32.1	59/64 23.4	1 5/16 33.3	3/8	1.5 .68
7/8 15/16 1	VPE-114 VPE-115 VPE-116	VE-114 VE-115 VE-116	2801 12459	1 7/16 36.5	5 1/2 139.7	3 11/16 93.7	4 9/16 115.9	1 13/32 35.7	19/32 15.1	2 13/16 71.4	1 17/64 32.1	59/64 23.4	1 1/2 38.1	3/8	1.8 .82
1 1/8 1 3/16 1 1/4	VPE-118 VPE-119 VPE-120S	VE-118 VE-119 VE-120S	4381 19487	1 11/16 42.9	6 3/16 157.2	4 3/16 106.4	5 1/16 128.6	1 3/4 44.5	21/32 16.7	3 9/32 83.3	1 27/64 36.1	1 3/64 26.6	1 3/4 44.5	1/2	2.9 1.32
1 1/4 1 3/8 1 7/16	VPE-120 VPE-122 VPE-123	VE-120 VE-122 VE-123	5782 25718	1 7/8 47.6	6 3/4 171.5	4 5/8 117.5	5 3/8 136.5	1 3/4 44.5	23/32 18.3	3 11/16 93.7	1 37/64 40.1	1 5/32 29.4	2 3/16 55.6	1/2	3.8 1.72
1 1/2	VPE-124	VE-124	7340 32648	2 50.8	7 1/8 181.0	4 7/8 123.8	5 7/8 149.2	1 15/16 49.2	13/16 20.6	4 101.6	1 49/64 44.8	1 9/32 32.5	2 3/8 60.3	1/2	5.0 2.27
1 11/16 1 3/4	VPE-127 VPE-128	VE-127 VE-128	7901 35144	2 1/8 54.0	7 3/8 187.3	5 1/4 133.4	6 1/16 154.0	2 50.8	3/4 19.1	4 1/4 108.0	1 49/64 44.8	1 9/32 32.5	2 1/2 63.5	1/2	5.7 2.59
1 15/16 2	VPE-131 VPE-132S	VE-131 VE-132S	7889 35090	2 1/4 57.2	8 203.2	5 7/8 149.2	6 1/2 165.1	2 3/16 55.6	3/4 19.1	4 9/16 115.9	1 25/32 45.2	1 9/32 32.5	2 3/4 69.9	5/8	6.3 2.86
2 2 3/16	VPE-132 VPE-135	VE-132 VE-135	9752 43377	2 1/2 63.5	8 13/16 223.8	6 9/16 166.7	7 5/16 185.7	2 5/16 58.7	7/8 22.2	4 31/32 126.2	1 63/64 50.4	1 7/16 36.5	3 76.2	5/8	8.1 3.67

For Replacement Lock Collar see page G-214.

Browning®

Mounted Ball Bearings

Duty: Standard
Rolling Elements: Ball
Housing: Cast Iron Pillow Block
Self Alignment: +/- 1.5 Degrees
Lock: Setscrew
Seal: Contact and Flinger
Temperature: -20° to 200°F

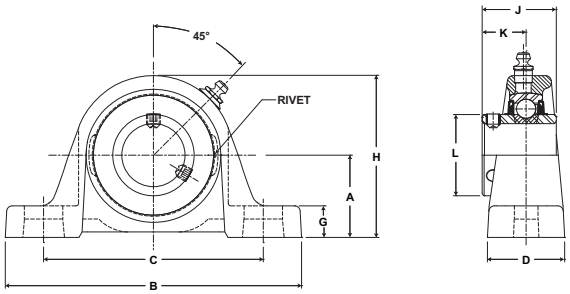

VPS 200 Series Standard Duty Pillow Blocks - Setscrew Locking - Inch

Bore Diameter inch	Part No.	Bearing Insert No.	Basic Dynamic Rating lb/N	Dimensions inch / mm A	B	C min.	C max.	D	G	H	J	K	L	Bolt Size	Unit Wt. lb/kg
1/2 5/8	VPS-208 VPS-210	VS-208 VS-210	2108 9377	1 3/16 30.2	4 7/8 123.8	3 1/8 79.4	4 1/8 104.8	1 7/32 31.0	15/32 11.9	2 7/32 56.4	1 1/32 26.2	5/8 15.9	31/32 24.6	3/8	.9 .41
3/4	VPS-212	VS-212	2611 11614	1 5/16 33.3	5 127.0	3 3/8 85.7	4 3/16 106.4	1 11/32 34.1	17/32 13.5	2 17/32 64.3	1 7/32 31.0	23/32 18.3	1 3/16 30.2	3/8	1.4 .64
7/8 15/16 1	VPS-214 VPS-215 VPS-216	VS-214 VS-215 VS-216	2801 12459	1 7/16 36.5	5 1/2 139.7	3 11/16 93.7	4 9/16 115.9	1 13/32 35.7	19/32 15.1	2 13/16 71.4	1 3/8 34.9	13/16 20.6	1 3/8 34.9	3/8	1.5 .68
1 1/8 1 3/16 1 1/4	VPS-218 VPS-219 VPS-220S	VS-218 VS-219 VS-220S	4381 19487	1 11/16 42.9	6 3/16 157.2	4 3/16 105.6	5 1/16 128.6	1 3/4 44.5	21/32 16.7	3 9/32 83.3	1 1/2 38.1	7/8 22.2	1 19/32 40.5	1/2	2.5 1.13
1 1/4 1 3/8 1 7/16	VPS-220 VPS-222 VPS-223	VS-220 VS-222 VS-223	5782 25718	1 7/8 47.6	6 3/4 171.5	4 5/8 117.5	5 3/8 136.5	1 3/4 44.5	23/32 18.3	3 11/16 93.7	1 11/16 42.9	1 25.4	1 55/64 47.2	1/2	3.5 1.59
1 1/2	VPS-224	VS-224	7340 32648	2 50.8	7 1/8 181.0	4 7/8 123.8	5 7/8 149.2	1 15/16 49.2	13/16 20.6	4 101.6	1 15/16 49.2	1 3/16 30.2	2 1/16 52.4	1/2	4.7 2.13
1 5/8 1 11/16 1 3/4	VPS-226 VPS-227 VPS-228	VS-226 VS-227 VS-228	7901 35144	2 1/8 54.0	7 3/8 187.3	5 1/4 133.4	6 1/16 154.0	2 50.8	3/4 19.1	4 1/4 108.0	1 15/16 49.2	1 3/16 30.2	2 19/64 58.3	1/2	5.5 2.49
1 15/16 2	VPS-231 VPS-232S	VS-231 VS-232S	7889 35090	2 1/4 57.2	8 203.2	5 7/8 149.2	6 1/2 165.1	2 3/16 55.6	3/4 19.1	4 9/16 115.9	2 1/32 51.6	1 9/32 32.5	2 15/32 62.7	5/8	6.0 3.5
2 2 3/16	VPS-232 VPS-235	VS-232 VS-235	9752 43377	2 1/2 63.5	8 13/16 223.8	6 9/16 166.7	7 5/16 185.7	2 5/16 58.7	7/8 22.2	4 31/32 126.2	2 3/16 55.6	1 5/16 33.3	2 23/32 69.1	5/8	7.8 3.54
2 1/4 2 7/16	VPS-236 VPS-239	VS-236 VS-239	11789 52437	2 3/4 69.9	9 1/2 241.3	6 7/8 174.6	7 15/16 201.6	2 3/8 60.3	7/8 22.2	5 9/16 141.3	2 9/16 65.1	1 9/16 39.7	2 63/64 75.8	5/8	10.1 3.5
2 15/16	VPS-247	VS-247	14839 66004	3 5/16 84.1	12 304.8	9 1/8 231.8	9 7/8 250.8	2 7/8 73.0	1 25.4	6 5/8 168.3	3 1/16 77.8	1 3/4 44.5	3 11/64 42.5	7/8	16.9 7.67

Metric dimensions for reference only.
Not all parts are available from stock. Please contact customer service for availability (800) 626-2120.
For more information on bearing capabilities outside of our standard offering, please contact Application Engineering (800) 626-2093.

Mounted Ball Bearings

Duty: Standard
Rolling Elements: Ball
Housing: Cast Iron Pillow Block
Self Alignment: +/- 1.5 Degrees
Lock: Setscrew
Seal: Contact and Flinger
Temperature: -20° to 200°F

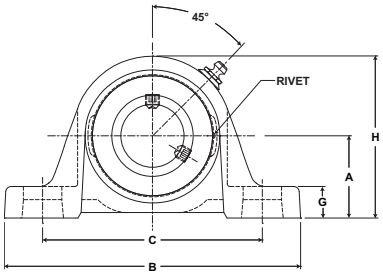

VPS-200 Series Standard Duty Pillow Blocks - Setscrew Locking - Metric

Bore Diameter mm	Part No.	Bearing Insert No.	Basic Dynamic Rating N/lb	Dimensions mm / inch										Bolt Size	Unit Wt. kg/lb
				A	B	C min.	C max.	D	G	H	J	K	L		
20	VPS-20 MM	VS-20 MM	11614 2611	33.3 1 5/16	127.0 5	85.7 3 3/8	106.4 4 3/16	34.1 1 11/32	13.5 17/32	64.3 2 17/32	31.0 1 7/32	18.3 23/32	30.2 1 3/16	M10	.6 1.4
25	VPS-25 MM	VS-25 MM	12459 2801	36.5 1 7/16	139.7 5 1/2	93.7 3 11/16	115.9 4 9/16	35.7 1 13/32	15.1 19/32	71.4 2 13/16	34.9 1 3/8	20.6 13/16	34.9 1 3/8	M10	.7 1.5
30	VPS-30 MM	VS-30 MM	19487 4381	42.9 1 11/16	157.2 6 3/16	105.6 4 3/16	128.6 5 1/16	44.5 1 3/4	16.7 21/32	83.3 3 9/32	38.1 1 1/2	22.2 7/8	40.5 1 19/32	M12	1.1 2.5
35	VPS-35 MM	VS-35 MM	25718 5782	47.6 1 7/8	171.5 6 3/4	117.5 4 5/8	136.5 5 3/8	44.5 1 3/4	18.3 23/32	93.7 3 11/16	42.9 1 11/16	25.4 1	47.2 1 55/64	M12	1.6 3.5
40	VPS-40 MM	VS-40 MM	32648 7340	49.2 1 89/95	181.0 7 1/8	123.8 4 7/8	149.2 5 7/8	49.2 1 15/16	20.6 13/16	100.0 3 89/95	49.2 1 15/16	30.2 1 3/16	52.4 2 1/16	M12	2.1 4.7
45	VPS-45 MM	VS-45 MM	35144 7901	54.0 2 1/8	187.3 7 3/8	133.4 5 1/4	154.0 6 1/16	50.8 2	19.1 3/4	108.0 4 1/4	49.2 1 15/16	30.2 1 3/16	58.3 2 19/64	M12	2.5 5.5
50	VPS-50 MM	VS-50 MM	35090 7889	57.2 2 1/4	203.2 8	149.2 5 7/8	165.1 6 1/2	55.6 2 3/16	19.1 3/4	115.9 4 9/16	51.6 2 1/32	32.5 1 9/32	62.7 2 15/32	M16	3.5 6
55	VPS-55 MM	VS-55 MM	43377 9752	63.5 2 1/2	223.8 8 13/16	6.7 6 9/16	185.7 7 5/16	58.7 2 5/16	22.2 7/8	126.2 4 31/32	55.6 2 3/16	33.3 1 5/16	69.1 2 23/32	M16	3.5 7.8
60	VPS-60 MM	VS-60 MM	52437 11789	69.9 2 3/4	241.3 9 1/2	174.6 6 7/8	201.6 7 15/16	60.3 2 3/8	22.2 7/8	141.3 5 9/16	65.1 2 9/16	39.7 1 9/16	75.8 2 63/64	M16	3.5 10.1

Browning®

Mounted Ball Bearings

Duty: Standard
Rolling Elements: Ball
Housing: Cast Iron Pillow Block
Self Alignment: +/- 1.5 Degrees
Lock: BOA Concentric
Seal: Contact and Flinger
Temperature: -20° to 200°F

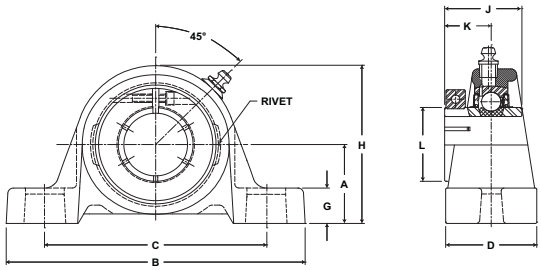

VPB 200 Series Standard Duty Pillow Blocks - BOA Concentric Locking

Bore Diameter		Part No.	Bearing Insert No.	Basic Dynamic Rating lb/N	Dimensions inch / mm										Bolt Size	Unit Wt. lb/kg
							C									
inch	mm				A	B	min.	max.	D	G	H	J	K	L		
3/4	-	VPB-212	VB-212	2611	1 5/16	5	3 3/8	4 3/16	1 11/32	17/32	2 17/32	1 9/32	25/32	1 3/4	3/8	1.6
-	20	VPB-20MM	VB-20MM	11614	33.3	127.0	85.7	106.4	34.1	13.5	64.3	32.5	19.8	44.5		.73
7/8	-	VPB-214	VB-214													
15/16	-	VPB-215	VB-215	2801	1 7/16	5 1/2	3 11/16	4 9/16	1 13/32	19/32	2 13/16	1 7/16	7/8	1 15/16	3/8	1.9
1	-	VPB-216	VB-216	12459	36.5	139.7	93.7	115.9	35.7	15.1	71.4	36.5	22.2	49.2		.86
-	25	VPB-25MM	VB-25MM													
1 1/8	-	VPB-218	VB-218													
1 3/16	-	VPB-219	VB-219	4381	1 11/16	6 3/16	4 3/16	5 1/16	1 3/4	21/32	3 9/32	1 9/16	15/16	2 3/16	1/2	2.9
1 1/4	-	VPB-220S	VB-220S	19487	42.9	157.2	106.4	128.6	44.5	16.7	83.3	39.7	23.8	55.6		1.32
-	30	VPB-30MM	VB-30MM													
1 1/4	-	VPB-220	VB-220	5782	1 7/8	6 3/4	4 5/8	5 3/8	1 3/4	23/32	3 11/16	1 3/4	1 1/16	2 7/16	1/2	3.8
				25718	47.6	171.5	117.5	136.5	44.5	18.3	93.7	44.5	27.0	61.9		1.72
1 3/8	-	VPB-222	VB-222	5782	1 7/8	6 3/4	4 5/8	5 3/8	1 3/4	23/32	3 11/16	1 3/4	1 1/16	2 9/16	1/2	3.8
1 7/16	-	VPB-223	VB-223	25718	47.6	171.5	117.5	136.5	44.5	18.3	93.7	44.5	27.0	65.1		1.72
-	35	VPB-35MM	VB-35MM													
1 1/2	-	VPB-224	VB-224	7340	2	7 1/8	4 7/8	5 7/8	1 15/16	13/16	4	2	1 1/4	2 11/16	1/2	4.9
-	40	VPB-40MM	VB-40MM	32648	50.8	181.0	123.8	149.2	49.2	20.6	101.6	50.8	31.8	68.3		2.22
1 5/8	-	VPB-226	VB-226	7901	2 1/8	7 3/8	5 1/4	6 1/16	2	3/4	4 1/4	2	1 1/4	2 13/16	1/2	5.6
				35144	54.0	187.3	133.4	154.0	50.8	19.1	108.0	50.8	31.8	71.4		2.54
1 11/16	-	VPB-227	VB-227	7901	2 1/8	7 3/8	5 1/4	6 1/16	2	3/4	4 1/4	2	1 1/4	2 15/16	1/2	5.6
1 3/4	-	VPB-228	VB-228	35144	54.0	187.3	133.4	154.0	50.8	19.1	108.0	50.8	31.8	74.6		2.54
-	45	VPB-45MM	VB-45MM													
1 15/16	-	VPB-231	VB-231	7889	2 1/4	8	5 7/8	6 1/2	2 3/16	3/4	4 9/16	2 3/32	1 11/32	3 3/8	5/8	6.2
2	-	VPB-232S	VB-232S	35090	57.2	203.2	149.2	165.1	55.6	19.1	115.9	53.2	34.1	85.7		2.81
-	50	VPB-50MM	VB-50MM													
2	-	VPB-232	VB-232	9752	2 1/2	8 13/16	6 9/16	7 5/16	2 5/16	7/8	4 31/32	2 1/4	1 3/8	3 1/2	5/8	8.0
				43377	63.5	223.8	166.7	185.7	58.7	22.2	126.2	57.2	34.9	88.9		3.63
2 3/16	-	VPB-235	VB-235	9752	2 1/2	8 13/16	6 9/16	7 5/15	2 5/16	7/8	4 31/32	2 1/4	1 3/8	3 5/8	5/8	8.0
-	55	VPB-55MM	VB-55MM	43377	63.5	223.8	166.7	185.7	58.7	22.2	126.2	57.2	34.9	92.1		3.63
2 1/4	-	VPB-236	VB-236	11789	2 3/4	9 1/2	6 7/8	7 15/16	2 3/8	7/8	5 9/16	2 5/8	1 5/8	4 1/16	5/8	10.1
				52437	69.9	241.3	174.6	201.6	60.3	22.2	141.3	66.7	41.3	103.2		4.58
2 7/16	-	VPB-239	VB-239	11789	2 3/4	9 1/2	6 7/8	7 15/16	2 3/8	7/8	5 9/16	2 5/8	1 5/8	4 1/8	5/8	10.1
-	60	VPB-60MM	VB-60MM	52437	69.9	241.3	174.6	201.6	60.3	22.2	141.3	66.7	41.3	104.8		4.58

For Replacement Lock Collar see page G-214.

Metric dimensions for reference only.
Not all parts are available from stock. Please contact customer service for availability (800) 626-2120.
For more information on bearing capabilities outside of our standard offering, please contact Application Engineering (800) 626-2093.

Mounted Ball Bearings

Duty: Standard
Rolling Elements: Ball
Housing: Cast Iron Pillow Block
Self Alignment: +/- 1.5 Degrees
Lock: Eccentric
Seal: Contact and Flinger
Temperature: -20° to 200°F

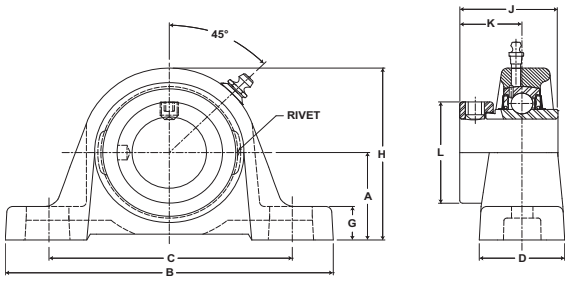

VPE 200 Series Standard Duty Pillow Blocks - Eccentric Locking

Bore Diameter inch	Part No.	Bearing Insert No.	Basic Dynamic Rating lb/N	Dimensions inch / mm A	B	C min.	C max.	D	G	H	J	K	L	Bolt Size	Unit Wt. lb/kg
1/2 5/8	VPE-208 VPE-210	VE-208 VE-210	2108 9377	1 3/16 30.2	4 7/8 123.8	3 1/8 79.4	4 1/8 104.8	1 7/32 31.0	15/32 11.9	2 7/32 56.4	1 15/32 37.3	59/64 23.4	1 3/16 30.2	3/8	1.0 .45
3/4	VPE-212	VE-212	2611 11614	1 5/16 33.3	5 127.0	3 3/8 85.7	4 3/16 106.4	1 11/32 34.1	17/32 13.5	2 17/32 64.3	1 23/32 43.7	1 3/64 26.6	1 5/16 33.3	3/8	1.5 .68
7/8 15/16 1	VPE-214 VPE-215 VPE-216	VE-214 VE-215 VE-216	2801 12459	1 7/16 36.5	5 1/2 139.7	3 11/16 93.7	4 9/16 115.9	1 13/32 35.7	19/32 15.1	2 13/16 71.4	1 3/4 44.5	1 1/16 27.0	1 1/2 38.1	3/8	1.8 .82
1 1/8 1 3/16 1 1/4	VPE-218 VPE-219 VPE-220S	VE-218 VE-219 VE-220S	4381 19487	1 11/16 42.9	6 3/16 157.2	4 3/16 106.4	5 1/16 128.6	1 3/4 44.5	21/32 16.7	3 9/32 83.3	1 29/32 48.4	1 3/16 30.2	1 3/4 44.5	1/2	2.9 1.32
1 1/4 1 3/8 1 7/16	VPE-220 VPE-222 VPE-223	VE-220 VE-222 VE-223	5782 25718	1 7/8 47.6	6 3/4 171.5	4 5/8 117.5	5 3/8 136.5	1 3/4 44.5	23/32 18.3	3 11/16 93.7	2 1/64 51.2	1 9/32 32.5	2 3/16 55.6	1/2	3.8 1.72
1 1/2	VPE-224	VE-224	7340 32648	2 50.8	7 1/8 181.0	4 7/8 123.8	5 7/8 149.2	1 15/16 49.2	13/16 20.6	4 101.6	2 7/32 56.4	1 3/8 34.9	2 3/8 60.3	1/2	5.0 2.27
1 5/8 1 11/16 1 3/4	VPE-226 VPE-227 VPE-228	VE-226 VE-227 VE-228	7901 35144	2 1/8 54.0	7 3/8 187.3	5 1/4 133.4	6 1/16 154.0	2 50.8	3/4 19.1	4 1/4 108.0	2 7/32 56.4	1 3/8 34.9	2 1/2 63.5	1/2	5.7 2.59
1 15/16	VPE-231	VE-231	7889 35090	2 1/4 57.2	8 203.2	5 7/8 149.2	6 1/2 165.1	2 3/16 55.6	3/4 19.1	4 9/16 115.9	2 15/32 62.7	1 1/2 38.1	2 3/4 69.9	5/8	6.3 2.86
2 2 3/16	VPE-232 VPE-235	VE-232 VE-235	9752 4377	2 1/2 63.5	8 13/16 223.8	6 9/16 166.7	7 5/16 185.7	2 5/16 58.7	7/8 22.2	4 31/32 126.2	2 13/16 71.4	1 23/32 43.7	3 76.2	5/8	8.1 3.67
2 1/4 2 7/16	VPE-236 VPE-239	VE-236 VE-239	13971 62143	2 3/4 69.9	9 1/2 241.3	6 7/8 174.6	7 15/16 201.6	2 3/8 60.3	7/8 22.2	5 9/16 141.3	3 1/16 77.8	1 27/32 46.8	3 3/8 85.7	5/8	10.2 4.63

For Replacement Lock Collar see page G-214.

Browning®

Mounted Ball Bearings

Duty: Medium
Rolling Elements: Ball
Housing: Cast Iron Pillow Block
Self Alignment: +/- 1.5 Degrees
Lock: Setscrew
Seal: Contact and Flinger
Temperature: -20° to 200°F

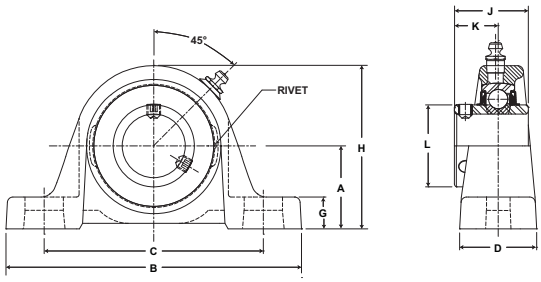

VPS 300 Series Medium Duty Pillow Blocks - Setscrew Locking

Bore Diameter inch	Part No.	Bearing Insert No.	Basic Dynamic Rating lb/N	Dimensions inch / mm										Bolt Size	Unit Wt. lb/kg
				A	B	C min.	C max.	D	G	H	J	K	L		
1	VPS-316	VS-316	4381 19487	1 3/4 44.5	6 3/16 157.2	4 3/16 106.4	5 1/16 128.6	1 3/4 44.5	23/32 18.3	3 11/32 84.9	1 1/2 38.1	7/8 22.2	1 19/32 40.5	1/2	3.6 1.63
1 3/16	VPS-319	VS-319	5782 25718	1 7/8 47.6	6 3/4 171.5	4 5/8 117.5	5 3/8 136.5	1 3/4 44.5	23/32 18.3	3 11/16 93.7	1 11/16 42.9	1 25.4	1 55/64 47.2	1/2	4.8 2.18
1 7/16	VPS-323	VS-323	7340 32648	2 1/8 54.0	7 1/4 184.2	5 5/16 134.9	5 3/4 146.1	2 50.8	13/16 20.6	4 3/16 106.4	1 15/16 49.2	1 3/16 30.2	2 1/16 52.4	1/2	6.2 2.81
1 1/2	VPS-324	VS-324	7901 35144	2 5/16 58.7	7 13/16 198.4	5 19/32 142.1	6 11/32 161.1	2 3/16 55.6	13/16 20.6	4 9/16 115.9	1 15/16 49.2	1 3/16 30.2	2 19/64 58.3	5/8	8.0 3.63
1 11/16 1 3/4	VPS-327 VPS-328	VS-327 VS-328	7889 35090	2 5/16 58.7	7 15/16 201.6	5 3/4 146.1	6 1/2 165.1	2 1/4 57.2	13/16 20.6	4 5/8 117.5	2 1/32 51.6	1 9/32 32.5	2 15/32 62.7	5/8	8.0 3.63
1 15/16 2	VPS-331 VPS-332	VS-331 VS-232	7889 35090	2 1/2 63.5	8 13/16 223.8	6 9/16 166.7	7 5/16 185.7	2 5/16 58.7	7/8 22.2	4 31/32 126.2	2 3/16 55.6	1 5/16 33.3	2 23/32 69.1	5/8	10.5 4.76
2 3/16 2 1/4	VPS-335 VPS-336	VS-335 VS-236	11789 52437	2 3/4 69.9	9 1/2 241.3	6 7/8 174.6	7 15/16 201.6	2 3/8 60.3	7/8 22.2	5 9/16 141.3	2 9/16 65.1	1 9/16 39.7	2 63/64 75.8	5/8	14.3 6.49

Metric dimensions for reference only.

Mounted Ball Bearings

Duty: Medium
Rolling Elements: Ball
Housing: Cast Iron Pillow Block
Self Alignment: +/- 1.5 Degrees
Lock: BOA Concentric
Seal: Contact and Flinger
Temperature: -20° to 200°F

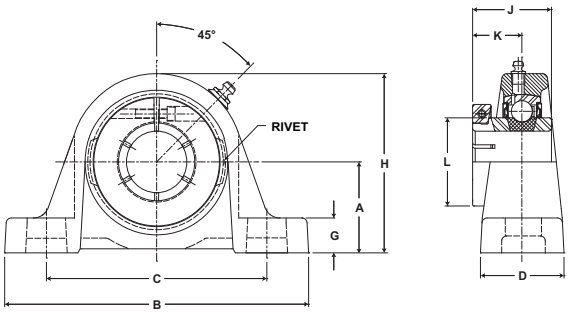

VPB 300 Series Medium Duty Pillow Blocks - BOA Concentric Locking

Bore Diameter inch	Part No.	Bearing Insert No.	Basic Dynamic Rating lb/N	Dimensions inch / mm										Bolt Size	Unit Wt. lb/kg
				A	B	C min.	C max.	D	G	H	J	K	L		
1	VPB-316	VB-316	4381 19487	1 3/4 44.5	6 3/16 157.2	4 3/16 106.4	5 1/16 128.6	1 3/4 44.5	23/32 18.3	3 11/32 84.9	1 9/16 39.7	15/16 23.8	2 1/16 52.4	1/2	3.1 1.41
1 3/16 1 1/4	VPB-319 VPB-320	VB-319 VB-220	5782 25718	1 7/8 47.6	6 3/4 171.5	4 5/8 117.5	5 3/8 136.5	1 3/4 44.5	23/32 18.3	3 11/16 93.7	1 3/4 44.5	1 1/16 27.0	2 7/16 61.9	1/2	3.1 1.41
1 7/16	VPB-323	VB-323	7340 32648	2 1/8 54.0	7 1/4 184.2	5 5/16 134.9	5 3/4 146.1	2 50.8	13/16 20.6	4 3/16 106.4	2 50.8	1 1/4 31.8	2 11/16 68.3	1/2	3.9 1.77
1 1/2	VPB-324	VB-324	7901 35144	2 5/16 58.7	7 13/16 198.4	5 19/32 142.1	6 11/32 161.1	2 3/16 55.6	13/16 20.6	4 9/16 115.9	2 50.8	1 1/4 31.8	2 13/16 71.4	1/2	4.8 2.18
1 11/16 1 3/4	VPB-327 VPB-328	VB-327 VB-328	7889 35090	2 5/16 58.7	7 15/16 201.6	5 3/4 146.1	6 1/2 165.1	2 1/4 57.2	13/16 20.6	4 5/8 117.5	2 3/32 53.2	1 11/32 34.1	3 1/4 82.6	5/8	5.8 2.63
1 15/16 2	VPB-331 VPB-332	VB-331 VB-232	9752 43377	2 1/2 63.5	8 13/16 223.8	6 9/16 166.7	7 5/16 185.7	2 5/16 58.7	7/8 22.2	4 31/32 126.2	2 1/4 57.2	1 3/8 34.9	3 1/2 88.9	5/8	8.1 3.67
2 3/16	VPB-335	VB-335	11789 52437	2 3/4 69.9	9 1/2 241.3	6 7/8 174.6	7 15/16 201.6	2 3/8 60.3	7/8 22.2	5 9/16 141.3	2 5/8 66.7	1 5/8 41.3	4 1/16 103.2	5/8	10.4 4.72

For Replacement Lock Collar see page G-214.

Browning®

Mounted Ball Bearings

Duty: Intermediate

Rolling Elements: Ball

Housing: Cast Iron Pillow Block – Low Base

Self Alignment: +/- 1.5 Degrees

Lock: Setscrew

Seal: Contact

Temperature: -20° to 200°F

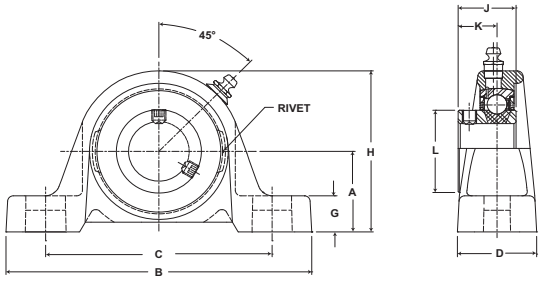

VPLS 100 Series Intermediate Duty Low Base Pillow Blocks - Setscrew Locking

Bore Diameter inch	Part No.	Bearing Insert No.	Basic Dynamic Rating lb/N	Dimensions inch / mm A	B	C min.	C max.	D	G	H	J	K	L	Bolt Size	Unit Wt. lb/kg
1/2 5/8	VPLS-108 VPLS-110	VS-108 VS-110	2108 9377	1 1/16 27.0	4 7/8 123.8	3 1/8 79.4	4 1/8 104.8	1 7/32 31.0	11/32 8.7	2 3/32 53.2	15/16 23.8	5/8 15.9	31/32 24.6	3/8	.7 .32
3/4	VPLS-112	VS-112	2611 11614	1 1/4 31.8	5 127.0	3 15/32 88.1	4 9/32 108.7	1 11/32 34.1	15/32 11.9	2 15/32 62.7	1 1/16 27.0	23/32 18.3	1 3/16 30.2	3/8	1.3 .59
7/8 15/16 1	VPLS-114 VPLS-115 VPLS-116	VS-114 VS-115 VS-116	2801 12459	1 5/16 33.3	5 1/2 139.7	3 11/16 93.7	4 9/16 115.9	1 13/32 35.7	15/32 11.9	2 11/16 68.3	1 7/64 28.2	49/64 19.4	1 3/8 34.9	3/8	1.4 .64
1 1/8 1 3/16 1 1/4	VPLS-118 VPLS-119 VPLS-120S	VS-118 VS-119 VS-120S	4381 19487	1 9/16 39.7	6 3/16 157.2	4 3/16 106.4	5 1/16 128.6	1 3/4 44.5	17/32 13.5	3 5/32 80.2	1 5/32 29.4	25/32 19.8	1 19/32 40.5	1/2	2.4 1.09
1 1/4 1 3/8 1 7/16	VPLS-120 VPLS-122 VPLS-123	VS-120 VS-122 VS-123	5782 25718	1 13/16 46.0	6 3/4 171.5	4 5/8 117.5	5 3/8 136.5	1 3/4 44.5	21/32 16.7	3 5/8 92.1	1 9/32 32.5	55/64 21.8	1 55/64 47.2	1/2	3.5 1.59
1 1/2	VPLS-124	VS-124	7340 32648	1 15/16 49.2	7 1/8 181.0	4 7/8 123.8	5 7/8 149.2	1 15/16 49.2	3/4 19.1	3 15/16 100.0	1 27/64 36.1	15/16 23.8	2 1/16 52.4	1/2	4.5 2.04
1 11/16 1 3/4	VPLS-127 VPLS-128	VS-127 VS-128	7901 35144	2 1/16 52.4	7 3/8 187.3	5 7/16 138.1	5 7/8 149.2	2 50.8	11/16 17.5	4 3/16 106.4	1 7/16 36.5	61/64 24.2	2 19/64 58.3	1/2	5.5 2.49
1 15/16 2	VPLS-131 VPLS-132S	VS-131 VS-132S	7889 35090	2 3/16 55.6	8 203.2	5 7/8 149.2	6 1/2 165.1	2 3/16 55.6	11/16 17.5	4 1/2 114.3	1 35/64 39.3	1 3/64 26.6	2 15/32 62.7	5/8	5.9 2.68
2 2 3/16	VPLS-132 VPLS-135	VS-132 VS-135	9752 43377	2 7/16 61.9	8 13/16 223.8	6 9/16 166.7	7 5/16 185.7	2 5/16 58.7	13/16 20.6	4 29/32 124.6	1 21/32 42.1	1 7/64 28.2	2 23/32 69.1	5/8	7.6 3.45

Metric dimensions for reference only.
Not all parts are available from stock. Please contact customer service for availability (800) 626-2120.
For more information on bearing capabilities outside of our standard offering, please contact Application Engineering (800) 626-2093.

Mounted Ball Bearings

Duty: Intermediate

Rolling Elements: Ball

Housing: Cast Iron Pillow Block – Low Base

Self Alignment: +/- 1.5 Degrees

Lock: Eccentric

Seal: Contact

Temperature: -20° to 200°F

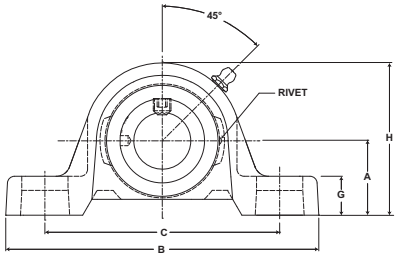

VPLE 100 Series Intermediate Duty Low Base Pillow Blocks - Eccentric Locking

Bore Diameter inch	Part No.	Bearing Insert No.	Basic Dynamic Rating lb/N	Dimensions inch / mm										Bolt Size	Unit Wt. lb/kg
				A	B	C min.	C max.	D	G	H	J	K	L		
1/2 5/8	VPLE-108 VPLE-110	VE-108 VE-110	2108 9377	1 1/16 27.0	4 7/8 123.8	3 1/8 79.4	4 1/8 104.8	1 7/32 31.0	11/32 8.7	2 3/32 53.2	1 3/16 30.2	7/8 22.2	1 3/16 30.2	3/8	.8 .36
3/4	VPLE-112	VE-112	2611 11614	1 1/4 31.8	5 127.0	3 15/32 88.1	4 9/32 108.7	1 11/32 34.1	15/32 11.9	2 15/32 62.7	1 17/64 32.1	59/64 23.4	1 5/16 33.3	3/8	1.4 .64
7/8 15/16 1	VPLE-114 VPLE-115 VPLE-116	VE-114 VE-115 VE-116	2801 12459	1 5/16 33.3	5 1/2 139.7	3 11/16 93.7	4 9/16 115.9	1 13/32 35.7	15/32 11.9	2 11/16 68.3	1 17/64 32.1	59/64 23.4	1 1/2 38.1	3/8	1.7 .77
1 1/8 1 3/16 1 1/4	VPLE-118 VPLE-119 VPLE-120S	VE-118 VE-119 VE-120S	4381 19487	1 9/16 39.7	6 3/16 157.2	4 3/16 106.4	5 1/16 128.6	1 3/4 44.5	17/32 13.5	3 5/32 80.2	1 27/64 36.1	1 3/64 26.6	1 3/4 44.5	1/2	2.8 1.27
1 1/4 1 3/8 1 7/16	VPLE-120 VPLE-122 VPLE-123	VE-120 VE-122 VE-123	5782 25718	1 13/16 46.0	6 3/4 171.5	4 5/8 117.5	5 3/8 136.5	1 3/4 44.5	21/32 16.7	3 5/8 92.1	1 37/64 40.1	1 5/32 29.4	2 3/16 55.6	1/2	3.7 1.68
1 1/2	VPLE-124	VE-124	7340 32648	1 15/16 49.2	7 1/8 181.0	4 7/8 123.8	5 7/8 149.2	1 15/16 49.2	3/4 19.1	3 15/16 100.0	1 49/64 44.8	1 9/32 32.5	2 3/8 60.3	1/2	4.8 2.18
1 11/16 1 3/4	VPLE-127 VPLE-128	VE-127 VE-128	7901 35144	2 1/16 52.4	7 3/8 187.3	5 7/16 138.1	5 7/8 149.2	2 50.8	11/16 17.5	4 3/16 106.4	1 49/64 44.8	1 9/32 32.5	2 1/2 63.5	1/2	5.6 2.54
1 15/16 2	VPLE-131 VPLE-132S	VE-131 VE-132S	7889 35090	2 3/16 55.6	8 203.2	5 7/8 149.2	6 1/2 165.1	2 3/16 55.6	11/16 17.5	4 1/2 114.3	1 25/32 45.2	1 9/32 32.5	2 3/4 69.9	5/8	6.2 2.81
2 2 3/16	VPLE-132 VPLE-135	VE-132 VE-135	9752 43377	2 7/16 61.9	8 13/16 223.8	6 9/16 166.7	7 5/16 185.7	2 5/16 58.7	13/16 20.6	4 29/32 124.6	1 63/64 50.4	1 7/16 36.5	3 76.2	5/8	7.9 3.58

For Replacement Lock Collar see page G-214.

Browning®

Mounted Ball Bearings

Duty: Standard

Rolling Elements: Ball

Housing: Cast Iron Pillow Block – Low Base

Self Alignment: +/- 1.5 Degrees

Lock: Setscrew

Seal: Contact and Flinger

Temperature: -20° to 200°F

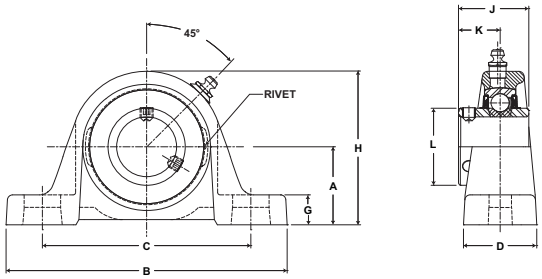

VPLS 200 Series Standard Duty Low Base Pillow Blocks - Setscrew Locking

Bore Diameter inch	Part No.	Bearing Insert No.	Basic Dynamic Rating lb/N	Dimensions inch / mm A	B	C min.	C max.	D	G	H	J	K	L	Bolt Size	Unit Wt. lb/kg
1/2 5/8	VPLS-208 VPLS-210	VS-208 VS-210	2108 9377	1 1/16 27.0	4 7/8 123.8	3 1/8 79.4	4 1/8 104.8	1 7/32 31.0	11/32 8.7	2 3/32 53.2	1 1/32 26.2	5/8 15.9	31/32 24.6	3/8	.7 .32
3/4	VPLS-212	VS-212	2611 11614	1 1/4 31.8	5 127.0	3 3/8 85.7	4 3/16 106.4	1 11/32 34.1	15/32 11.9	2 15/32 62.7	1 7/32 31.0	23/32 18.3	1 3/16 30.2	3/8	1.3 .59
7/8 15/16 1	VPLS-214 VPLS-215 VPLS-216	VS-214 VS-215 VS-216	2801 12459	1 5/16 33.3	5 1/2 139.7	3 11/16 93.7	4 9/16 115.9	1 13/32 35.7	15/32 11.9	2 11/16 68.3	1 3/8 34.9	13/16 20.6	1 3/8 34.9	3/8	1.4 .64
1 1/8 1 3/16 1 1/4	VPLS-218 VPLS-219 VPLS-220S	VS-218 VS-219 VS-220S	4381 19487	1 9/16 39.7	6 3/16 157.2	4 3/16 106.4	5 1/16 128.6	1 3/4 44.5	17/32 13.5	3 5/32 80.2	1 1/2 38.1	7/8 22.2	1 19/32 40.5	1/2	2.4 1.09
1 1/4 1 3/8 1 7/16	VPLS-220 VPLS-222 VPLS-223	VS-220 VS-222 VS-223	5782 25718	1 13/16 46.0	6 3/4 171.5	4 5/8 117.5	5 3/8 136.5	1 3/4 44.5	21/32 16.7	3 5/8 92.1	1 11/16 42.9	1 25.4	1 55/64 47.3	1/2	3.5 1.59
1 1/2	VPLS-224	VS-224	7340 32648	1 15/16 49.2	7 1/8 181.0	4 7/8 123.8	5 7/8 149.2	1 15/16 49.2	3/4 19.1	3 15/16 100.0	1 15/16 49.2	1 3/16 30.2	2 1/16 52.4	1/2	4.5 2.04
1 5/8 1 11/16 1 3/4	VPLS-226 VPLS-227 VPLS-228	VS-226 VS-227 VS-228	7901 35144	2 1/16 52.4	7 3/8 187.3	5 1/4 133.4	6 1/16 154.0	2 50.8	11/16 17.5	4 3/16 106.4	1 15/16 49.2	1 3/16 30.2	2 19/64 58.3	1/2	5.5 2.49
1 15/16 2	VPLS-231 VPLS-232S	VS-231 VS-232S	7889 35090	2 3/16 55.6	8 203.2	5 7/8 149.2	6 1/2 165.1	2 3/16 55.6	11/16 17.5	4 1/2 114.3	2 1/32 51.6	1 9/32 32.5	2 15/32 62.7	5/8	5.9 2.68
2 2 3/16	VPLS-232 VPLS-235	VS-232 VS-235	9752 43377	2 7/16 61.9	8 13/16 223.8	6 9/16 166.7	7 5/16 185.7	2 5/16 58.7	13/16 20.6	4 29/32 124.6	2 3/16 55.6	1 19/64 32.9	2 23/32 69.1	5/8	7.6 3.45
2 1/4 2 7/16	VPLS-236 VPLS-239	VS-236 VS-239	11789 52437	2 11/16 68.3	9 1/2 241.3	6 7/8 174.6	7 15/16 201.6	2 3/8 60.3	13/16 20.6	5 1/2 139.7	2 9/16 65.1	1 9/16 39.7	2 63/64 75.8	5/8	9.7 4.40

Metric dimensions for reference only.

Mounted Ball Bearings

Duty: Standard

Rolling Elements: Ball

Housing: Cast Iron Pillow Block – Low Base

Self Alignment: +/- 1.5 Degrees

Lock: BOA Concentric

Seal: Contact and Flinger

Temperature: -20° to 200°F

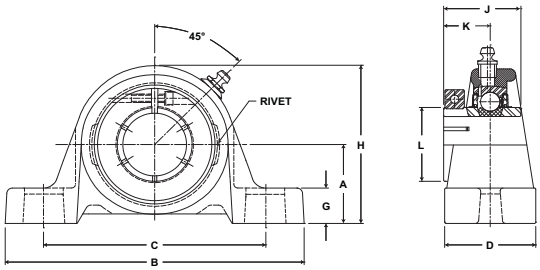

VPLB 200 Series Standard Duty Low Base Pillow Blocks - BOA Concentric Locking

Bore Diameter inch	Part No.	Bearing Insert No.	Basic Dynamic Rating lb/N	Dimensions inch / mm A	B	C min.	C max.	D	G	H	J	K	L	Bolt Size	Unit Wt. lb/kg
3/4	VPLB-212	VB-212	2611 11614	1 1/4 31.8	5 127.0	3 3/8 85.7	4 3/16 106.4	1 11/32 34.1	15/32 11.9	2 15/32 62.7	1 9/32 32.5	25/32 19.8	1 3/4 44.5	3/8	1.4 .64
7/8 15/16 1	VPLB-214 VPLB-215 VPLB-216	VB-214 VB-215 VB-216	2801 12459	1 5/16 33.3	5 1/2 139.7	3 11/16 93.7	4 9/16 115.9	1 13/32 35.7	15/32 11.9	2 11/16 68.3	1 7/16 36.5	7/8 22.2	1 15/16 49.2	3/8	1.6 .73
1 1/8 1 3/16 1 1/4	VPLB-218 VPLB-219 VPLB-220S	VB-218 VB-219 VB-220S	4381 19487	1 9/16 39.7	6 3/16 157.2	4 3/16 106.4	5 1/16 128.6	1 3/4 44.5	17/32 13.5	3 5/32 80.2	1 9/16 39.7	15/16 23.8	2 3/16 55.6	1/2	2.6 1.18
1 1/4	VPLB-220	VB-220	5782 25718	1 13/16 46.0	6 3/4 171.5	4 5/8 117.5	5 3/8 136.5	1 3/4 44.5	21/32 16.7	3 5/8 92.1	1 3/4 44.5	1 1/16 27.0	2 7/16 61.9	1/2	3.8 1.72
1 3/8 1 7/16	VPLB-222 VPLB-223	VB-222 VB-223	5782 25718	1 13/16 46.0	6 3/4 171.5	4 5/8 117.5	5 3/8 136.5	1 3/4 44.5	21/32 16.7	3 5/8 92.1	1 3/4 44.5	1 1/16 27.0	2 9/16 65.1	1/2	3.8 1.72
1 1/2	VPLB-224	VB-224	7340 32648	1 15/16 49.2	7 1/8 181.0	4 7/8 123.8	5 7/8 149.2	1 15/16 49.2	3/4 19.1	3 15/16 100.0	2 50.8	1 1/4 31.8	2 11/16 68.3	1/2	4.8 2.18
1 5/8	VPLB-226	VB-226	7901 35144	2 1/16 52.4	7 3/8 187.3	5 1/4 133.4	6 1/16 154.0	2 50.8	11/16 17.5	4 3/16 106.4	2 50.8	1 1/4 31.8	2 13/16 71.4	1/2	5.8 2.63
1 11/16 1 3/4	VPLB-227 VPLB-228	VB-227 VB-228	7901 35144	2 1/16 52.4	7 3/8 187.3	5 1/4 133.4	6 1/16 154.0	2 50.8	11/16 17.5	4 3/16 106.4	2 50.8	1 1/4 31.8	2 15/16 74.6	1/2	6.5 2.95
1 15/16 2	VPLB-231 VPLB-232S	VB-231 VB-232S	7889 35090	2 3/16 55.6	8 203.2	5 7/8 149.2	6 1/2 165.1	2 3/16 55.6	11/16 17.5	4 1/2 114.3	2 3/32 53.2	1 11/32 34.1	3 3/8 85.7	5/8	6.5 2.95
2	VPLB-232	VB-232	9752 43377	2 7/16 61.9	8 13/16 223.8	6 9/16 166.7	7 5/16 185.7	2 5/16 58.7	13/16 20.6	4 29/32 124.6	2 1/4 57.2	1 3/8 34.9	3 1/2 88.9	5/8	8.2 3.72
2 3/16	VPLB-235	VB-235	9752 43377	2 7/16 61.9	8 13/16 223.8	6 9/16 166.7	7 5/16 185.7	2 5/16 58.7	13/16 20.6	4 29/32 124.6	2 1/4 57.2	1 3/8 34.9	3 5/8 92.1	5/8	10.9 4.94
2 1/4	VPLB-236	VB-236	11789 52437	2 11/16 68.3	9 1/2 241.3	6 7/8 174.6	7 15/16 201.6	2 3/8 60.3	13/16 20.6	5 1/2 139.7	2 5/8 66.7	1 5/8 41.3	4 1/16 103.2	5/8	10.9 4.94
2 7/16	VPLB-239	VB-239	11789 52437	2 11/16 68.3	9 1/2 241.3	6 7/8 174.6	7 15/16 201.6	2 3/8 60.3	13/16 20.6	5 1/2 139.7	2 5/8 66.7	1 5/8 41.3	4 1/8 104.8	5/8	10.9 4.94

For Replacement Lock Collar see page G-214.

Browning®

Mounted Ball Bearings

Duty: Standard

Rolling Elements: Ball

Housing: Cast Iron Pillow Block – Low Base

Self Alignment: +/- 1.5 Degrees

Lock: Eccentric

Seal: Contact and Flinger

Temperature: -20° to 200°F

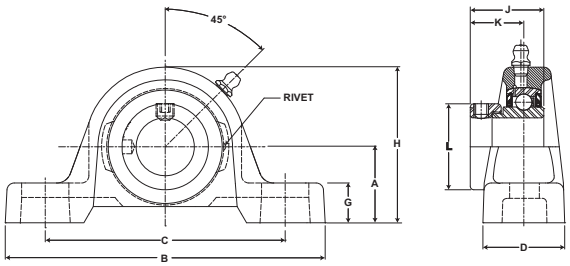

VPLE 200 Series Standard Duty Low Base Pillow Blocks - Eccentric Locking

Bore Diameter inch	Part No.	Bearing Insert No.	Basic Dynamic Rating lb/N	Dimensions inch / mm A	B	C min.	C max.	D	G	H	J	K	L	Bolt Size	Unit Wt. lb/kg
1/2	VPLE-208	VE-208	2108	1 1/16	4 7/8	3 1/8	4 1/8	1 7/32	11/32	2 3/32	1 15/32	59/64	1 3/16	3/8	.8
5/8	VPLE-210	VE-210	9377	27.0	123.8	79.4	104.8	31.0	8.7	53.2	37.3	23.4	30.2		.36
3/4	VPLE-212	VE-212	2611 11614	1 1/4 31.8	5 127.0	3 3/8 85.7	4 3/16 106.4	1 11/32 34.1	15/32 11.9	2 15/32 62.7	1 23/32 43.7	1 3/64 26.6	1 5/16 33.3	3/8	1.4 .64
7/8	VPLE-214	VE-214	2801 12459	1 5/16 33.3	5 1/2 139.7	3 11/16 93.7	4 9/16 115.9	1 13/32 35.7	15/32 11.9	2 11/16 68.3	1 3/4 44.5	1 1/16 27.0	1 1/2 38.1	3/8	1.7 .77
15/16	VPLE-215	VE-215													
1	VPLE-216	VE-216													
1 1/8	VPLE-218	VE-218	4381 19487	1 9/16 39.7	6 3/16 157.2	4 3/16 106.4	5 1/16 128.6	1 3/4 44.5	17/32 13.5	3 5/32 80.2	1 29/32 48.4	1 3/16 30.2	1 3/4 44.5	1/2	2.8 1.27
1 3/16	VPLE-219	VE-219													
1 1/4	VPLE-220S	VE-220S													
1 1/4	VPLE-220	VE-220	5782 25718	1 13/16 46.0	6 3/4 171.5	4 5/8 117.5	5 3/8 136.5	1 3/4 44.5	21/32 16.7	3 5/8 92.1	2 1/64 51.2	1 9/32 32.5	2 3/16 55.6	1/2	3.7 1.68
1 3/8	VPLE-222	VE-222													
1 7/16	VPLE-223	VE-223													
1 1/2	VPLE-224	VE-224	7340 32648	1 15/16 49.2	7 1/8 181.0	4 7/8 123.8	5 7/8 149.2	1 15/16 49.2	3/4 19.1	3 15/16 100.0	2 7/32 56.4	1 3/8 34.9	2 3/8 60.3	1/2	4.8 2.18
1 5/8	VPLE-226	VE-226	7901 35144	2 1/16 52.4	7 3/8 187.3	5 1/4 133.4	6 1/16 154.0	2 50.8	11/16 17.5	4 3/16 106.4	2 7/32 56.4	1 3/8 34.9	2 1/2 63.5	1/2	5.6 2.54
1 11/16	VPLE-227	VE-227													
1 3/4	VPLE-228	VE-228													
1 15/16	VPLE-231	VE-231	7889 35090	2 3/16 55.6	8 203.2	5 7/8 149.2	6 1/2 165.1	2 3/16 55.6	11/16 17.5	4 1/2 114.3	2 15/32 62.7	1 1/2 38.1	2 3/4 69.9	5/8	6.2 2.81
2	VPLE-232	VE-232	9752 43377	2 7/16 61.9	8 13/16 223.8	6 9/16 166.7	7 5/16 185.7	2 5/16 188.9	13/16 58.7	4 29/32 20.6	2 13/16 124.6	1 23/32 71.4	3 43.7	5/8	7.9 .28
2 3/16	VPLE-235	VE-235													
2 1/4	VPLE-236	VE-236	11789 52437	2 11/16 68.3	9 1/2 241.3	6 7/8 174.6	7 15/16 201.6	2 3/8 60.3	13/16 20.6	5 1/2 139.7	3 1/16 77.8	1 27/32 46.8	3 3/8 85.7	5/8	10 4.54
2 7/16	VPLE-239	VE-239													

For Replacement Lock Collar see page G-214.

Metric dimensions for reference only.
Not all parts are available from stock. Please contact customer service for availability (800) 626-2120.
For more information on bearing capabilities outside of our standard offering, please contact Application Engineering (800) 626-2093.

Mounted Ball Bearings

Duty: Standard

Rolling Elements: Ball

Housing: Cast Iron Pillow Block - Alternate Base

Self Alignment: +/- 1.5 Degrees

Lock: Setscrew

Seal: Contact

Temperature: -20° to 200°F

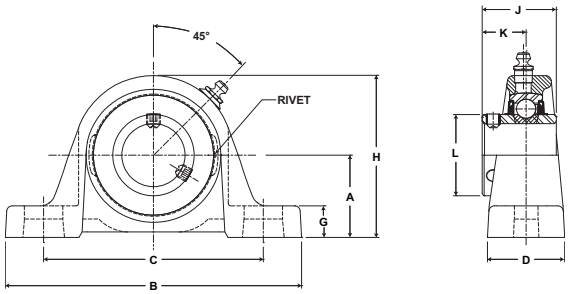

VPDS 200 Series Standard Duty Pillow Blocks - Setscrew Locking

Bore Diameter inch	Part No.	Bearing Insert No.	Basic Dynamic Rating lb/N	Dimensions inch / mm A	B	C min.	C max.	D	G	H	J	K	L	Bolt Size	Unit Wt. lb/kg
1 3/16	VPDS-219	VS-219	4381	1 5/8	6 3/16	4 3/16	5 1/16	1 3/4	19/32	3 9/32	1 1/2	7/8	1 19/32	1/2	2.8
1 1/4	VPDS-220S	VS-220S	19487	41.3	157.2	106.4	128.6	44.5	15.1	83.3	38.1	22.2	40.5		1.27
1 1/2	VPDS-224	VS-224	7340 32648	2 1/8 54.0	7 1/4 184.2	5 7/32 132.6	5 27/32 148.4	2 50.8	13/16 20.6	4 3/16 106.4	1 15/16 49.2	1 3/16 30.2	2 1/16 52.4	1/2	5.3 2.40

Browning® Mounted Ball Bearings

Duty: Intermediate

Rolling Elements: Ball

Housing: Cast Iron Tapped Base Pillow Block

Self Alignment: +/- 1.5 Degrees

Lock: Eccentric

Seal: Contact

Temperature: -20° to 200°F

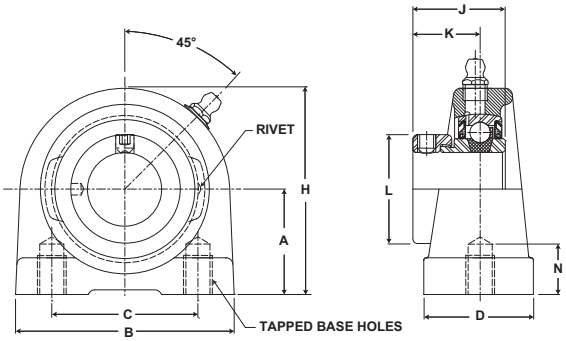

VTBE 100 Series Intermediate Duty Tapped Base Pillow Blocks - Eccentric Locking

Bore Diameter inch	Part No.	Bearing Insert No.	Basic Dynamic Rating lb/N	Dimensions inch / mm A	B	C	D	H	J	K	L	Tapped Hole Thread Size	N Min Tap Depth	Unit Wt. lb/kg
3/4	VTBE-112	VE-112	2611 11614	1 5/16 33.3	2 7/8 73.0	2 50.8	1 1/2 38.1	2 9/16 65.1	1 17/64 32.1	59/64 23.4	1 5/16 33.3	3/8-16	1/2	1.5 .68
7/8 15/16 1	VTBE-114 VTBE-115 VTBE-116	VE-114 VE-115 VE-116	2801 12459	1 7/16 36.5	3 76.2	2 50.8	1 1/2 38.1	2 13/16 71.4	1 17/64 32.1	59/64 23.4	1 1/2 38.1	3/8-16	1/2	1.6 .73
1 1/8 1 3/16 1 1/4	VTBE-118 VTBE-119 VTBE-120S	VE-118 VE-119 VE-120S	4381 19487	1 11/16 42.9	4 101.6	3 76.2	1 1/2 38.1	3 3/8 85.7	1 27/64 36.1	1 3/64 26.6	1 3/4 44.5	7/16-14	5/8	2.5 1.13
1 1/4 1 3/8 1 7/16	VTBE-120 VTBE-122 VTBE-123	VE-120 VE-122 VE-123	5782 25718	1 7/8 47.6	4 1/4 108.0	3 1/4 82.6	1 7/8 47.6	3 3/4 95.3	1 37/64 40.1	1 5/32 29.4	2 3/16 55.6	1/2-13	3/4	3.4 1.54
1 1/2	VTBE-124	VE-124	7340 32648	1 15/16 49.2	4 5/8 117.5	3 1/2 88.9	1 7/8 47.6	3 15/16 100.0	1 49/64 44.8	1 9/32 32.5	2 3/8 60.3	1/2-13	3/4	3.8 1.72
1 11/16 1 3/4	VTBE-127 VTBE-128	VE-127 VE-128	7901 35144	2 1/8 54.0	5 127.0	3 3/4 95.3	2 50.8	4 1/4 108.0	1 49/64 44.8	1 9/32 32.5	2 1/2 63.5	1/2-13	3/4	4.7 2.13
1 15/16 2	VTBE-131 VTBE-132S	VE-131 VE-132S	7889 35090	2 1/4 57.2	5 1/2 139.7	4 101.6	2 50.8	4 5/8 117.5	1 25/32 45.2	1 9/32 32.5	2 3/4 69.9	5/8-11	7/8	5.7 2.59

For Replacement Lock Collar see page G-214.

Metric dimensions for reference only.
Not all parts are available from stock. Please contact customer service for availability (800) 626-2120.
For more information on bearing capabilities outside of our standard offering, please contact Application Engineering (800) 626-2093.

Mounted Ball Bearings

Duty: Standard

Rolling Elements: Ball

Housing: Cast Iron Tapped Base Pillow Block

Self Alignment: +/- 1.5 Degrees

Lock: Setscrew

Seal: Contact and Flinger

Temperature: -20° to 200°F

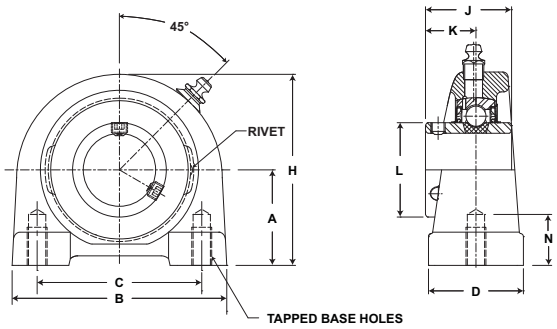

VTBS 200 Series Standard Duty Tapped Base Pillow Blocks - Setscrew Locking

Bore Diameter inch	Part No.	Bearing Insert No.	Basic Dynamic Rating lb/N	Dimensions inch / mm A	B	C	D	H	J	K	L	Tapped Hole Thread Size	N Min Tap Depth	Unit Wt. lb/kg
1/2 5/8	VTBS-208 VTBS-210	VS-208 VS-210	2108 9377	1 5/16 33.3	2 7/8 73.0	2 50.8	1 1/2 38.1	2 9/16 65.1	1 1/32 26.2	5/8 15.9	31/32 24.6	3/8-16	1/2	1.3 .59
3/4	VTBS-212	VS-212	2611 11614	1 5/16 33.3	2 7/8 73.0	2 50.8	1 1/2 38.1	2 9/16 65.1	1 7/32 31.0	23/32 18.3	1 3/16 30.2	3/8-16	1/2	1.5 .68
7/8 15/16 1	VTBS-214 VTBS-215 VTBS-216	VS-214 VS-215 VS-216	2801 12459	1 7/16 36.5	3 76.2	2 50.8	1 1/2 38.1	2 13/16 71.4	1 3/8 34.9	13/16 20.6	1 3/8 34.9	3/8-16	1/2	1.6 .73
1 1/8 1 3/16 1 1/4	VTBS-218 VTBS-219 VTBS-220S	VS-218 VS-219 VS-220S	4381 19487	1 11/16 42.9	4 101.6	3 76.2	1 1/2 38.1	3 3/8 85.7	1 1/2 38.1	7/8 22.2	1 19/32 40.5	7/16-14	5/8	2.5 1.13
1 1/4 1 3/8 1 7/16	VTBS-220 VTBS-222 VTBS-223	VS-220 VS-222 VS-223	5782 25718	1 7/8 47.6	4 1/4 108.0	3 1/4 82.6	1 7/8 47.6	3 3/4 95.3	1 11/16 42.9	1 25.4	1 55/64 47.2	1/2-13	3/4	3.4 1.54
1 1/2	VTBS-224	VS-224	7340 32648	1 15/16 49.2	4 5/8 117.5	3 1/2 88.9	1 7/8 47.6	3 15/16 100.0	1 15/16 49.2	1 3/16 30.2	2 1/16 52.4	1/2-13	3/4	3.8
1 5/8 1 11/16 1 3/4	VTBS-226 VTBS-227 VTBS-228	VS-226 VS-227 VS-228	7901 35144	2 1/8 54.0	5 127.0	3 3/4 95.3	2 50.8	4 1/4 108.0	1 15/16 49.2	1 3/16 30.2	2 19/64 58.3	1/2-13	3/4	4.7 2.13
1 15/16 2	VTBS-231 VTBS-232S	VS-231 VS-232S	7889 35090	2 1/4 57.2	5 1/2 139.7	4 101.6	2 50.8	4 5/8 117.5	2 1/32 51.6	1 9/32 32.5	2 15/32 62.7	5/8-11	7/8	5.7 2.59

Browning®

Mounted Ball Bearings

Duty: Standard

Rolling Elements: Ball

Housing: Cast Iron Tapped Base Pillow Block

Self Alignment: +/- 1.5 Degrees

Lock: Setscrew

Seal: Contact and Flinger

Temperature: -20° to 200°F

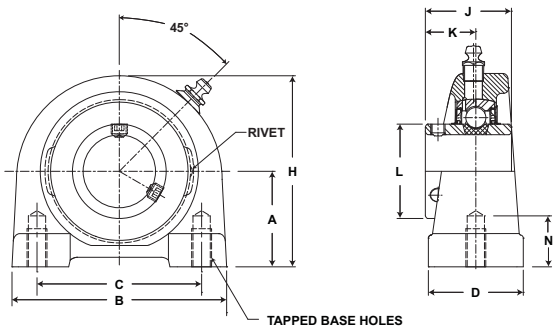

VTBS 200 Series Standard Duty Tapped Base Pillow Blocks - Setscrew Locking - Metric

Bore Diameter mm	Part No.	Bearing Insert No.	Basic Dynamic Rating N/lb	Dimensions mm / inch								Tapped Hole Thread Size	N Min Tap Depth	Unit Wt. kg/lb
				A	B	C	D	H	J	K	L			
20	VTBS-20 MM	VS-20 MM	11614 2611	33.3 1 5/16	73.0 2 7/8	50.8 2	38.1 1 1/2	65.1 2 9/16	31.0 1 7/32	18.3 23/32	30.2 1 3/16	M8	12.7	.68 1.5
25	VTBS-25MM	VS-25MM	12459 2801	36.5 1 7/16	76.2 3	50.8 2	38.1 1 1/2	71.4 2 13/16	34.9 1 3/8	20.6 13/16	34.9 1 3/8	M25	12.7	.73 1.6
30	VTBS-30MM	VS-30MM	19487 4381	42.9 1 11/16	101.6 4	76.2 3	38.1 1 1/2	85.7 3 3/8	38.1 1 1/2	22.2 7/8	40.5 1 19/32	M10	15.9	1.13 2.5
35	VTBS-35MM	VS-35MM	25718 5782	47.6 1 7/8	108.0 4 1/4	82.6 3 1/4	47.6 1 7/8	95.3 3 3/4	42.9 1 11/16	25.4 1	47.2 1 55/64	M10	19.1	1.5 3.4
40	VTBS-40MM	VS-40MM	32648 7340	49.2 1 15/16	117.5 4 5/8	88.9 3 1/2	47.6 1 7/8	100.0 3 15/16	49.2 1 15/16	30.2 1 3/16	52.4 2 1/16	M12	19.1	1.72 3.8
45	VTBS-45MM	VS-45MM	35144 7901	54.0 2 1/8	127.0 5	95.3 3 3/4	50.8 2	108.0 4 1/4	49.2 1 15/16	30.2 1 3/16	58.3 2 19/64	M12	19.1	2.13 4.7
50	VTBS-50MM	VS-50MM	35090 7889	57.2 2 1/4	139.7 5 1/2	101.6 4	50.8 2	117.5 4 5/8	51.6 2 1/32	32.5 1 9/32	62.7 2 15/32	M16	22.2	2.59 5.7

Metric dimensions for reference only.
Not all parts are available from stock. Please contact customer service for availability (800) 626-2120.
For more information on bearing capabilities outside of our standard offering, please contact Application Engineering (800) 626-2093.

Mounted Ball Bearings

Duty: Standard

Rolling Elements: Ball

Housing: Cast Iron Tapped Base Pillow Block

Self Alignment: +/- 1.5 Degrees

Lock: BOA

Seal: Contact and Flinger

Temperature: -20° to 200°F

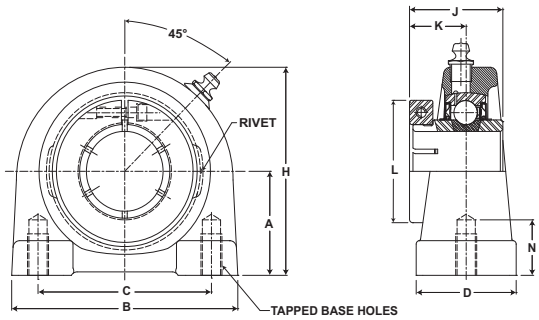

VTBB 200 Series Standard Duty Tapped Base Pillow Blocks - BOA Concentric Locking

Bore Diameter inch	Part No.	Bearing Insert No.	Basic Dynamic Rating lb/N	Dimensions inch / mm								Tapped Hole Thread Size	N Min Tap Depth	Unit Wt. lb/kg
				A	B	C	D	H	J	K	L			
3/4	VTBB-212	VB-212	2611 11614	1 5/16 33.3	2 7/8 73.0	2 50.8	1 1/2 38.1	2 9/16 65.1	1 9/32 32.5	25/32 19.8	1 3/4 44.5	3/8-16	1/2	1.7 .77
7/8 15/16 1	VTBB-214 VTBB-215 VTBB-216	VB-214 VB-215 VB-216	2801 12459	1 7/16 36.5	3 76.2	2 50.8	1 1/2 38.1	2 13/16 71.4	1 7/16 36.5	7/8 22.2	1 15/16 49.2	3/8-16	1/2	1.8 .82
1 1/8 1 3/16 1 1/4	VTBB-218 VTBB-219 VTBB-220S	VB-218 VB-219 VB-220S	4381 19487	1 11/16 42.9	4 101.6	3 76.2	1 1/2 38.1	3 3/8 85.7	1 9/16 39.7	15/16 23.8	2 3/16 55.6	7/16-14	5/8	2.8 1.27
1 1/4	VTBB-220	VB-220	5782 25718	1 7/8 47.6	4 1/4 108.0	3 1/4 82.6	1 7/8 47.6	3 3/4 95.3	1 3/4 44.5	1 1/16 27.0	2 7/16 61.9	1/2-13	3/4	4.0 1.81
1 3/8 1 7/16	VTBB-222 VTBB-223	VB-222 VB-223	5782 25718	1 7/8 47.6	4 1/4 108.0	3 1/4 82.6	1 7/8 47.6	3 3/4 95.3	1 3/4 44.5	1 1/16 27.0	2 9/16 65.1	1/2-13	3/4	4.0 1.81
1 1/2	VTBB-224	VB-224	7340 32648	1 15/16 49.2	4 5/8 117.5	3 1/2 88.9	1 7/8 47.6	3 15/16 100.0	2 50.8	1 1/4 31.8	2 11/16 68.3	1/2-13	3/4	4.5 2.04
1 5/8	VTBB-226	VB-226	7901 35144	2 1/8 54.0	5 127.0	3 3/4 95.3	2 50.8	4 1/4 108.0	2 50.8	1 1/4 31.8	2 13/16 71.4	1/2-13	3/4	5.6 2.54
1 11/16 1 3/4	VTBB-227 VTBB-228	VB-227 VB-228	7901 35144	2 1/8 54.0	5 127.0	3 3/4 95.3	2 50.8	4 1/4 108.0	2 50.8	1 1/4 31.8	2 15/16 74.6	1/2-13	3/4	5.6 2.54
1 15/16 2	VTBB-231 VTBB-232S	VB-231 VB-232S	7889 35090	2 1/4 57.2	5 1/2 139.7	4 101.6	2 50.8	4 5/8 117.5	2 3/32 53.2	1 11/32 34.1	3 3/8 85.7	5/8-11	7/8	6.9 3.13

For Replacement Lock Collar see page G-214.

Browning® Mounted Ball Bearings

Duty: Intermediate
Rolling Elements: Ball
Housing: Cast Iron Four Bolt Flange
Self Alignment: +/- 1.5 Degrees
Lock: Setscrew
Seal: Contact and Flinger
Temperature: -20° to 200°F

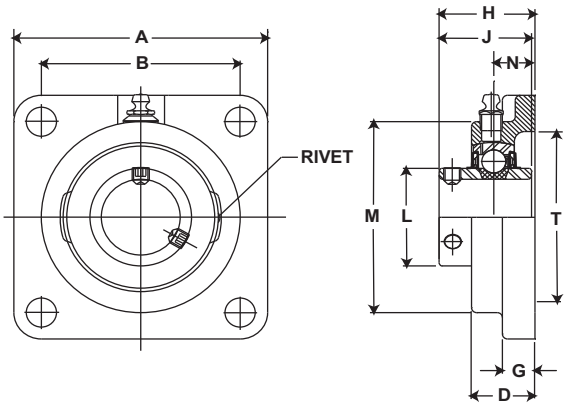

VF4S 100 Series Intermediate Duty Four Bolt Flanges - Setscrew Locking

Bore Diameter inch	Part No.	Bearing Insert No.	Basic Dynamic Rating lb/N	Dimensions inch / mm A	B*	D	G	H	J	L	M	N	T Cored	Bolt Size	Unit Wt. lb/kg
1/2 5/8	VF4S-108 VF4S-110	VS-108 VS-110	2108 9377	3 76.2	2 1/8 54.0	23/32 18.3	3/8 9.5	1 5/64 27.4	15/16 23.8	31/32 24.6	2 1/8 54.0	5/16 7.9	1 3/4 44.5	3/8	1.0 .45
3/4	VF4S-112	VS-112	2611 11614	3 3/8 85.7	2 1/2 63.5	57/64 22.6	7/16 11.1	1 9/32 32.5	1 1/16 27.0	1 3/16 30.2	2 1/2 63.5	11/32 8.7	2 50.8	3/8	1.3 .59
7/8 15/16 1	VF4S-114 VF4S-115 VF4S-116	VS-114 VS-115 VS-116	2801 12459	3 3/4 95.3	2 3/4 69.9	61/64 24.2	1/2 12.7	1 25/64 35.3	1 7/64 28.2	1 3/8 34.9	2 3/4 69.9	11/32 8.7	2 1/2 63.5	7/16	1.7 .77
1 1/8 1 3/16 1 1/4	VF4S-118 VF4S-119 VF4S-120S	VS-118 VS-119 VS-120S	4381 19487	4 1/4 108.0	3 1/4 82.6	1 5/64 27.4	17/32 13.5	1 15/32 37.3	1 5/32 29.4	1 19/32 40.5	3 1/8 79.4	3/8 9.5	2 7/8 73.0	7/16	2.4 1.09
1 1/4 1 3/8 1 7/16	VF4S-120 VF4S-122 VF4S-123	VS-120 VS-122 VS-123	5782 25718	4 5/8 117.5	3 5/8 92.1	1 5/32 29.4	19/32 15.1	1 39/64 40.9	1 9/32 32.5	1 55/64 47.2	3 5/8 92.1	27/64 10.7	3 1/4 82.6	1/2	3.4 1.54
1 1/2	VF4S-124	VS-124	7340 32648	5 1/8 130.2	4 101.6	1 19/64 32.9	5/8 15.9	1 49/64 44.8	1 27/64 36.1	2 1/16 52.4	4 1/8 104.8	31/64 12.3	3 1/2 88.9	1/2	4.4 2.00
1 11/16 1 3/4	VF4S-127 VF4S-128	VS-127 VS-128	7901 35144	5 3/8 136.5	4 1/8 104.8	1 21/64 33.7	5/8 15.9	1 13/16 46.0	1 7/16 36.5	2 19/64 58.3	4 3/8 111.1	31/64 12.3	3 7/8 98.4	9/16	4.7 2.13
1 15/16 2	VF4S-131 VF4S-132S	VS-131 VS-132S	7889 35090	5 5/8 142.9	4 3/8 111.1	1 23/64 34.5	5/8 15.9	1 59/64 48.8	1 35/64 39.3	2 15/32 62.7	4 9/16 115.9	1/2 12.7	4 101.6	9/16	5.4 2.45
2 2 3/16	VF4S-132 VF4S-135	VS-132 VS-135	9752 43377	6 3/8 161.9	5 1/8 130.2	1 33/64 38.5	13/16 20.6	2 7/64 53.6	1 21/32 42.1	2 23/32 69.1	5 1/4 133.4	35/64 13.9	4 1/4 108.0	5/8	7.7 3.49

* To obtain bolt circle multiply B x 1.414".

Metric dimensions for reference only.
Not all parts are available from stock. Please contact customer service for availability (800) 626-2120.
For more information on bearing capabilities outside of our standard offering, please contact Application Engineering (800) 626-2093.

Mounted Ball Bearings

Duty: Intermediate
Rolling Elements: Ball
Housing: Cast Iron Four Bolt Flange
Self Alignment: +/- 1.5 Degrees
Lock: Eccentric
Seal: Contact
Temperature: -20° to 200°F

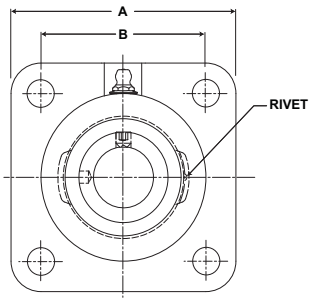

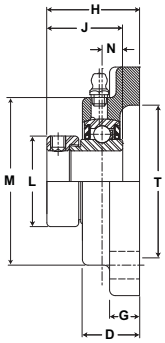

VF4E 100 Series Intermediate Duty Four Bolt Flanges - Eccentric Locking

Bore Diameter inch	Part No.	Bearing Insert No.	Basic Dynamic Rating lb/N	Dimensions inch / mm A	B*	D	G	H	J	L	M	N	T Cored	Bolt Size	Unit Wt. lb/kg
1/2 5/8	VF4E-108 VF4E-110	VE-108 VE-110	2108 9377	3 76.2	2 1/8 54.0	23/32 18.3	3/8 9.5	1 21/64 33.7	1 3/16 30.2	1 3/16 30.2	2 1/8 54.0	5/16 7.9	1 3/4 44.5	3/8	1.1 .50
3/4	VF4E-112	VE-112	2611 11614	3 3/8 85.7	2 1/2 63.5	57/64 22.6	7/16 11.1	1 31/64 37.7	1 17/64 32.1	1 5/16 33.3	2 1/2 63.5	11/32 8.7	2 50.8	3/8	1.4 .64
7/8 15/16 1	VF4E-114 VF4E-115 VF4E-116	VE-114 VE-115 VE-116	2801 12459	3 3/4 95.3	2 3/4 69.9	61/64 24.2	1/2 12.7	1 35/64 39.3	1 17/64 32.1	1 1/2 38.1	2 3/4 69.9	11/32 8.7	2 1/2 63.5	7/16	1.8 .82
1 1/8 1 3/16 1 1/4	VF4E-118 VF4E-119 VF4E-120S	VE-118 VE-119 VE-120S	4381 19487	4 1/4 108.0	3 1/4 82.6	1 5/64 27.4	17/32 13.5	1 47/64 44.1	1 27/64 36.1	1 3/4 44.5	3 1/8 79.4	3/8 9.5	2 7/8 73.0	7/16	2.6 1.18
1 1/4 1 3/8 1 7/16	VF4E-120 VF4E-122 VF4E-123	VE-120 VE-122 VE-123	5782 25718	4 5/8 117.5	3 5/8 92.1	1 5/32 29.4	19/32 15.1	1 29/32 48.4	1 37/64 40.1	2 3/16 55.6	3 5/8 92.1	27/64 10.7	3 1/4 82.6	1/2	3.6 1.63
1 1/2	VF4E-124	VE-124	7340 32648	5 1/8 130.2	4 101.6	1 19/64 32.9	5/8 15.9	2 7/64 53.6	1 49/64 44.8	2 3/8 60.3	4 1/8 104.8	31/64 12.3	3 1/2 88.9	1/2	4.7 2.13
1 11/16 1 3/4	VF4E-127 VF4E-128	VE-127 VE-128	7901 35144	5 3/8 136.5	4 1/8 104.8	1 21/64 33.7	5/8 15.9	2 9/64 54.4	1 49/64 44.8	2 1/2 63.5	4 3/8 111.1	31/64 12.3	3 7/8 98.4	9/16	5.0 2.27
1 15/16 2	VF4E-131 VF4E-132S	VE-131 VE-132S	7889 35090	5 5/8 142.9	4 3/8 111.1	1 23/64 34.5	5/8 15.9	2 5/32 54.8	1 25/32 45.2	2 3/4 69.9	4 9/16 115.9	1/2 12.7	4 101.6	9/16	5.6 2.54
2 2 3/16	VF4E-132 VF4E-135	VE-132 VE-135	9752 43377	6 3/8 161.9	5 1/8 130.2	1 33/64 38.5	13/16 20.6	2 7/16 61.9	1 63/64 50.4	3 76.2	5 1/4 133.4	35/64 13.9	4 1/4 108.0	5/8	7.7 3.49

* To obtain bolt circle multiply B x 1.414".

For Replacement Lock Collar see page G-214.

Browning® Mounted Ball Bearings

Duty: Standard
Rolling Elements: Ball
Housing: Cast Iron Four Bolt Flange
Self Alignment: +/- 1.5 Degrees
Lock: Setscrew
Seal: Contact and Flinger
Temperature: -20° to 200°F

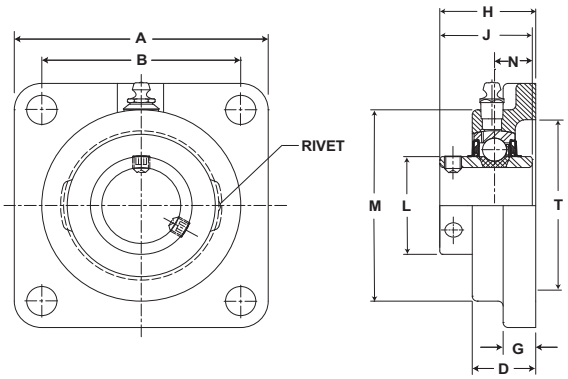

VF4S 200 Series Standard Duty Four Bolt Flanges - Setscrew Locking - Inch

Bore Diameter		Part No.	Bearing Insert No.	Basic Dynamic Rating lb/N	Dimensions inch / mm										Bolt Size	Unit Wt. lb/kg
inch	mm				A	B*	D	G	H	J	L	M	N	T Cored		
1/2	12.7	VF4S-208	VS-208	2108	3	2 1/8	23/32	3/8	1 5/64	1 1/32	31/32	2 1/8	13/32	1 3/4	3/8	1.1
5/8	15.9	VF4S-210	VS-210	9377	76.2	54.0	18.3	9.5	27.4	26.2	24.6	54.0	10.3	44.5		.50
3/4	19.1	VF4S-212	VS-212	2611	3 3/8	2 1/2	57/64	7/16	1 9/32	1 7/32	1 3/16	2 1/2	1/2	2	3/8	1.4
				11614	85.7	63.5	22.6	11.1	32.5	31.0	30.2	63.5	12.7	50.8		.64
7/8	22.2	VF4S-214	VS-214	2801	3 3/4	2 3/4	61/64	1/2	1 7/16	1 3/8	1 3/8	2 3/4	9/16	2 1/2	7/16	1.6
15/16	23.8	VF4S-215	VS-215	12459	95.3	69.9	24.2	12.7	36.5	34.9	34.9	69.9	14.3	63.5		.73
1	25.4	VF4S-216	VS-216													
1 1/8	28.6	VF4S-218	VS-218	4381	4 1/4	3 1/4	1 5/64	17/32	1 9/16	1 1/2	1 19/32	3 1/8	5/8	2 7/8	7/16	2.6
1 3/16	30.2	VF4S-219	VS-219	19487	108.0	82.6	27.4	13.5	39.7	38.1	40.5	79.4	15.9	73.0		1.18
1 1/4	31.8	VF4S-220S	VS-220S													
1 1/4	31.8	VF4S-220	VS-220	5782	4 5/8	3 5/8	1 5/32	19/32	1 3/4	1 11/16	1 55/64	3 5/8	11/16	3 1/4	1/2	3.6
1 3/8	34.9	VF4S-222	VS-222	25718	117.5	92.1	29.4	15.1	44.5	42.9	47.2	92.1	17.5	82.6		1.63
1 7/16	36.5	VF4S-223	VS-223													
1 1/2	38.1	VF4S-224	VS-224	7340	5 1/8	4	1 19/64	5/8	2 1/64	1 15/16	2 1/16	4 1/8	3/4	3 1/2	1/2	4.9
				32648	130.2	101.6	32.9	15.9	51.2	49.2	52.4	104.8	19.1	88.9		2.22
1 5/8	41.3	VF4S-226	VS-226	7901	5 3/8	4 1/8	1 21/64	5/8	2 3/64	1 15/16	2 19/64	4 3/8	3/4	3 7/8	9/16	5.2
1 11/16	42.9	VF4S-227	VS-227	35144	136.5	104.8	33.7	15.9	52.0	49.2	58.3	111.1	19.1	98.4		2.36
1 3/4	44.5	VF4S-228	VS-228													
1 15/16	49.2	VF4S-231	VS-231	7889	5 5/8	4 3/8	1 23/64	5/8	2 5/32	2 1/32	2 15/32	4 9/16	3/4	4	9/16	5.6
2	50.8	VF4S-232S	VS-232S	35090	142.9	111.1	34.5	15.9	54.8	51.6	62.7	115.9	19.1	101.6		2.54
2	50.8	VF4S-232	VS-232	9752	6 3/8	5 1/8	1 33/64	13/16	2 5/16	2 3/16	2 23/32	5 1/4	7/8	4 1/4	5/8	7.9
2 3/16	55.6	VF4S-235	VS-235	43377	161.9	130.2	38.5	20.6	58.7	55.6	69.1	133.4	22.2	108.0		3.58
2 1/4	57.2	VF4S-236	VS-236	11789	6 7/8	5 5/8	1 11/16	13/16	2 11/16	2 3/16	2 63/64	5 7/16	1	5	5/8	9.6
2 7/16	61.9	VF4S-239	VS-239	52437	174.6	142.9	42.9	20.6	68.3	55.6	75.8	138.1	25.4	127.0		4.35

* To obtain bolt circle multiply B x 1.414".

Metric dimensions for reference only.
Not all parts are available from stock. Please contact customer service for availability (800) 626-2120.
For more information on bearing capabilities outside of our standard offering, please contact Application Engineering (800) 626-2093.

Mounted Ball Bearings

Duty: Standard
Rolling Elements: Ball
Housing: Cast Iron Four Bolt Flange
Self Alignment: +/- 1.5 Degrees
Lock: Setscrew
Seal: Contact and Flinger
Temperature: -20° to 200°F

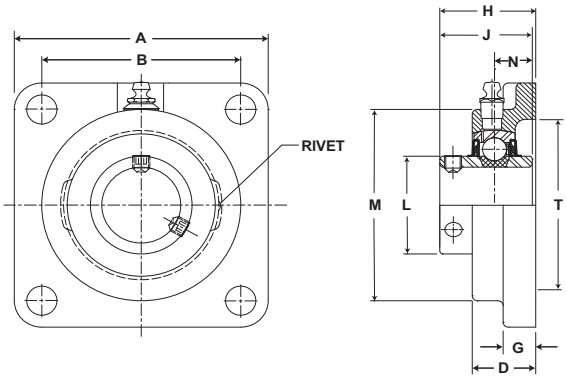

VF4S 200 Series Standard Duty Four Bolt Flanges - Setscrew Locking - Metric

Bore Diameter mm	Part No.	Bearing Insert No.	Basic Dynamic Rating N/lb	Dimensions mm / inch										Bolt Size	Unit Wt. kg/lb
				A	B*	D	G	H	J	L	M	N	T Cored		
20	VF4S-20 MM	VS-20 MM	11614 2611	85.7 3 3/8	63.5 2 1/2	22.6 57/64	11.1 7/16	32.5 1 9/32	31.0 1 7/32	30.2 1 3/16	63.5 2 1/2	12.7 1/2	50.8 2	M10	.64 1.4
25	VF4S-25 MM	VS-25 MM	12459 2801	95.3 3 3/4	69.9 2 3/4	24.2 61/64	12.7 1/2	36.5 1 7/16	34.9 1 3/8	34.9 1 3/8	69.9 2 3/4	14.3 9/16	63.5 2 1/2	M10	.73 1.6
30	VF4S-30 MM	VS-30 MM	19487 4381	108.0 4 1/4	82.6 3 1/4	27.4 1 5/64	13.5 17/32	39.7 1 9/16	38.1 1 1/2	40.5 1 19/32	79.4 3 1/8	15.9 5/8	73.0 2 7/8	M10	1.18 2.6
35	VF4S-35 MM	VS-35 MM	25718 5782	117.5 4 5/8	92.1 3 5/8	29.4 1 5/32	15.1 19/32	44.5 1 3/4	42.9 1 11/16	47.2 1 55/64	92.1 3 5/8	17.5 11/16	82.6 3.25	M12	1.63 3.6
40	VF4S-40 MM	VS-40 MM	32648 7340	130.2 5 1/8	101.6 4	32.9 1 19/64	15.9 5/8	51.2 2 1/64	49.2 1 15/16	52.4 2 1/16	104.8 4 1/8	19.1 3/4	88.9 3 1/2	M12	2.22 4.9
45	VF4S-45 MM	VS-45 MM	35144 7901	136.5 5 3/8	104.8 4 1/8	33.7 1 21/64	15.9 5/8	52.0 2 3/64	49.2 1 15/16	58.3 2 19/64	111.1 4 3/8	19.1 3/4	98.4 3 7/8	M14	2.36 5.2
50	VF4S-50 MM	VS-50 MM	35090 7889	142.9 5 5/8	111.1 4 3/8	34.5 1 23/64	15.9 5/8	54.8 2 5/32	51.6 2 1/32	62.7 2 15/32	115.9 4 9/16	19.1 3/4	101.6 4	M16	2.54 5.6
55	VF4S-55 MM	VS-55 MM	43377 9752	161.9 6 3/8	130.2 5 1/8	38.5 1 33/64	20.6 13/16	58.7 2 5/16	55.6 2 3/16	69.1 2 23/32	133.4 5 1/4	22.2 7/8	108.0 4 1/4	M16	3.58 7.9
60	VF4S-60 MM	VS-60 MM	52437 11789	174.6 6 7/8	142.9 5 5/8	42.9 1 11/16	20.6 13/16	68.3 2 11/16	55.6 2 3/16	75.8 2 63/64	138.1 5 7/16	25.4 1	127.0 5	M16	4.35 9.6

* To obtain bolt circle multiply B x 1.414".

Browning®

Mounted Ball Bearings

Duty: Standard
Rolling Elements: Ball
Housing: Cast Iron Four Bolt Flange
Self Alignment: +/- 1.5 Degrees
Lock: BOA Concentric
Seal: Contact and Flinger
Temperature: -20° to 200°F

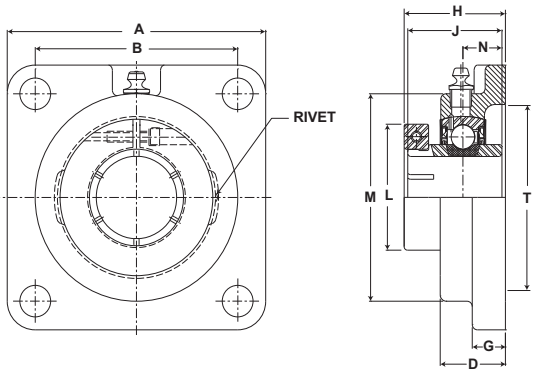

VF4B 200 Series Standard Duty Four Bolt Flanges - BOA Concentric Locking

Bore Diameter inch	Part No.	Bearing Insert No.	Basic Dynamic Rating lb/N	Dimensions inch / mm A	B*	D	G	H	J	L	M	N	T Cored	Bolt Size	Unit Wt. lb/kg
3/4	VF4B-212	VB-212	2611 11614	3 3/8 85.7	2 1/2 63.5	57/64 22.6	7/16 11.1	1 11/32 34.1	1 9/32 32.5	1 3/4 44.5	2 1/2 63.5	1/2 12.7	2 50.8	3/8	1.5 .68
7/8 15/16 1	VF4B-214 VF4B-215 VF4B-216	VB-214 VB-215 VB-216	2801 12459	3 3/4 95.3	2 3/4 69.9	61/64 24.2	1/2 12.7	1 1/2 38.1	1 7/16 36.5	1 15/16 49.2	2 3/4 69.9	9/16 14.3	2 1/2 63.5	7/16	1.8 .82
1 1/8 1 3/16 1 1/4	VF4B-218 VF4B-219 VF4B-220S	VB-218 VB-219 VB-220S	4381 19487	4 1/4 108.0	3 1/4 82.6	1 5/64 27.4	17/32 13.5	1 5/8 41.3	1 9/16 39.7	2 3/16 55.6	3 1/8 79.4	5/8 15.9	2 7/8 73.0	7/16	2.8 1.27
1 1/4	VF4B-220	VB-220	5782 25718	4 5/8 117.5	3 5/8 92.1	1 5/32 29.4	19/32 15.1	1 13/16 46.0	1 3/4 44.5	2 7/16 61.9	3 5/8 92.1	11/16 17.5	3 1/4 82.6	1/2	3.9 1.77
1 3/8 1 7/16	VF4B-222 VF4B-223	VB-222 VB-223	5782 25718	4 5/8 117.5	3 5/8 92.1	1 5/32 29.4	19/32 15.1	1 13/16 46.0	1 3/4 44.5	2 9/16 65.1	3 5/8 92.1	11/16 17.5	3 1/4 82.6	1/2	3.9 1.77
1 1/2	VF4B-224	VB-224	7340 32648	5 1/8 130.2	4 101.6	1 19/64 32.9	5/8 15.9	2 5/64 52.8	2 50.8	2 11/16 68.3	4 1/8 104.8	3/4 19.1	3 1/2 88.9	1/2	5.2 2.36
1 5/8	VF4B-226	VB-226	7901 35144	5 3/8 136.5	4 1/8 104.8	1 21/64 33.7	5/8 15.9	2 7/64 53.6	2 50.8	2 13/16 71.4	4 3/8 111.1	3/4 19.1	3 7/8 98.4	9/16	5.5 2.49
1 11/16 1 3/4	VF4B-227 VF4B-228	VB-227 VB-228	7901 35144	5 3/8 136.5	4 1/8 104.8	1 21/64 33.7	5/8 15.9	2 7/64 53.6	2 50.8	2 15/16 74.6	4 3/8 111.1	3/4 19.1	3 7/8 98.4	9/16	5.5 2.49
1 15/16 2	VF4B-231 VF4B-232S	VB-231 VB-232S	7889 35090	5 5/8 142.9	4 3/8 111.1	1 23/64 34.5	5/8 15.9	2 7/32 56.4	2 3/32 53.2	3 3/8 85.7	4 9/16 115.9	3/4 19.1	4 101.6	9/16	6.2 2.81
2	VF4B-232	VB-232	9752 43377	6 3/8 161.9	5 1/8 130.2	1 33/64 38.5	13/16 20.6	2 3/8 60.3	2 1/4 57.2	3 1/2 88.9	5 1/4 133.4	7/8 22.2	4 1/4 108.0	5/8	8.5 3.86
2 3/16	VF4B-235	VB-235	9752 43377	6 3/8 161.9	5 1/8 130.2	1 33/64 38.5	13/16 20.6	2 3/8 60.3	2 1/4 57.2	3 5/8 92.1	5 1/4 133.4	7/8 22.2	4 1/4 108.0	5/8	8.5 3.86
2 1/4	VF4B-236	VB-236	11789 52437	6 7/8 174.6	5 5/8 142.9	1 11/16 42.9	13/16 20.6	2 3/4 69.9	2 5/8 66.7	4 1/16 103.2	5 7/16 138.1	1 25.4	5 127.0	5/8	10.8 4.90
2 7/16	VF4B-239	VB-239	11789 52437	6 7/8 174.6	5 5/8 142.9	1 11/16 42.9	13/16 20.6	2 3/4 69.9	2 5/8 66.7	4 1/8 104.8	5 7/16 138.1	1 25.4	5 127.0	5/8	10.8 4.90

* To obtain bolt circle multiply B x 1.414".

For Replacement Lock Collar see page G-214.

Metric dimensions for reference only.

Not all parts are available from stock. Please contact customer service for availability (800) 626-2120.

For more information on bearing capabilities outside of our standard offering, please contact Application Engineering (800) 626-2093.

Mounted Ball Bearings

Duty: Standard
Rolling Elements: Ball
Housing: Cast Iron Four Bolt Flange
Self Alignment: +/- 1.5 Degrees
Lock: Eccentric
Seal: Contact and Flinger
Temperature: -20° to 200°F

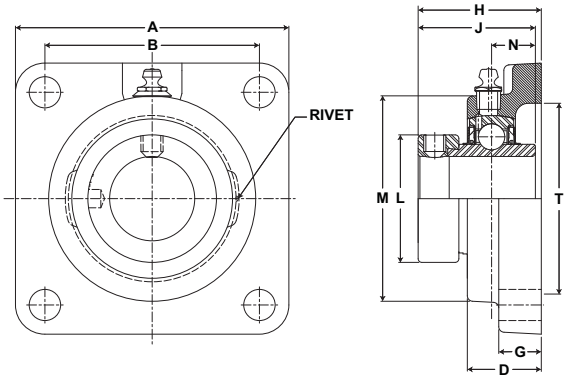

VF4E 200 Series Standard Duty Four Bolt Flanges - Eccentric Locking

Bore Diameter inch	Part No.	Bearing Insert No.	Basic Dynamic Rating lb/N	Dimensions inch / mm A	B*	G	D	H	J	L	M	N	T Cored	Bolt Size	Unit Wt. lb/kg
1/2	VF4E-208	VE-208	2108	3	2 1/8	1/2	7/8	1 33/64	1 15/32	1 3/16	2 1/8	35/64	1 3/4	3/8	1.2
5/8	VF4E-210	VE-210	9377	76.2	54.0	12.7	22.2	38.5	37.3	30.2	54.0	13.9	44.5		.54
3/4	VF4E-212	VE-212	2611 / 11614	3 3/8 / 85.7	2 1/2 / 63.5	1/2 / 12.7	1 5/64 / 27.4	1 51/64 / 45.6	1 23/32 / 43.7	1 5/16 / 33.3	2 1/2 / 63.5	43/64 / 17.1	2 / 50.8	3/8	1.5 / .68
7/8	VF4E-214	VE-214	2801 / 12459	3 3/4 / 95.3	2 3/4 / 69.9	9/16 / 14.3	1 7/64 / 28.2	1 27/32 / 46.8	1 3/4 / 44.5	1 1/2 / 38.1	2 3/4 / 69.9	11/16 / 17.5	2 1/2 / 63.5	7/16	2.0 / .91
15/16	VF4E-215	VE-215													
1	VF4E-216	VE-216													
1 1/8	VF4E-218	VE-218	4381 / 19487	4 1/4 / 108.0	3 1/4 / 82.6	5/8 / 15.9	1 13/64 / 30.6	2 / 50.8	1 29/32 / 48.4	1 3/4 / 44.5	3 1/8 / 79.4	23/32 / 18.3	2 7/8 / 73.0	7/16	3.0 / 1.36
1 3/16	VF4E-219	VE-219													
1 1/4	VF4E-220S	VE-220S													
1 1/4	VF4E-220	VE-220	5782 / 25718	4 5/8 / 117.5	3 5/8 / 92.1	21/32 / 16.7	1 1/4 / 31.8	2 1/8 / 54.0	2 1/64 / 51.2	2 3/16 / 55.6	3 5/8 / 92.1	3/4 / 19.1	3 1/4 / 82.6	1/2	3.8 / 1.72
1 3/8	VF4E-222	VE-222													
1 7/16	VF4E-223	VE-223													
1 1/2	VF4E-224	VE-224	7340 / 32648	5 1/8 / 130.2	4 / 101.6	11/16 / 17.5	1 13/32 / 35.7	2 5/16 / 58.7	2 7/32 / 56.4	2 3/8 / 60.3	4 1/8 / 104.8	27/32 / 21.4	3 1/2 / 88.9	1/2	5.1 / 2.31
1 5/8	VF4E-226	VE-226	7901 / 35144	5 3/8 / 136.5	4 1/8 / 104.8	11/16 / 17.5	1 13/32 / 35.7	2 5/16 / 58.7	2 7/32 / 56.4	2 1/2 / 63.5	4 3/8 / 111.1	27/32 / 21.4	3 7/8 / 98.4	9/16	5.4 / 2.45
1 11/16	VF4E-227	VE-227													
1 3/4	VF4E-228	VE-228													
1 15/16	VF4E-231	VE-231	7889 / 35090	5 5/8 / 142.9	4 3/8 / 111.1	23/32 / 18.3	1 39/64 / 40.9	2 5/8 / 66.7	2 15/32 / 62.7	2 3/4 / 69.9	4 9/16 / 115.9	31/32 / 24.6	4 / 101.6	9/16	5.9 / 2.68
2	VF4E-232	VE-232	9752 / 43377	6 3/8 / 161.9	5 1/8 / 130.2	25/32 / 19.8	1 49/64 / 44.8	2 31/32 / 75.4	2 13/16 / 71.4	3 / 76.2	5 1/4 / 133.4	1 3/32 / 27.8	4 1/4 / 108.0	5/8	8.2 / 3.72
2 3/16	VF4E-235	VE-235													
2 1/4	VF4E-236	VE-236	11789 / 52437	6 7/8 / 174.6	5 5/8 / 142.9	13/16 / 20.6	1 31/32 / 50.0	3 1/4 / 82.6	3 1/16 / 77.8	3 3/8 / 85.7	5 7/16 / 138.1	1 7/32 / 31.0	4 7/8 / 123.8	5/8	9.9 / 4.49
2 7/16	VF4E-239	VE-239													

* To obtain bolt circle multiply B x 1.414".

For Replacement Lock Collar see page G-214.

Browning® Mounted Ball Bearings

Duty: Medium
Rolling Elements: Ball
Housing: Cast Iron Four Bolt Flange
Self Alignment: +/- 1.5 Degrees
Lock: Setscrew
Seal: Contact and Flinger
Temperature: -20° to 200°F

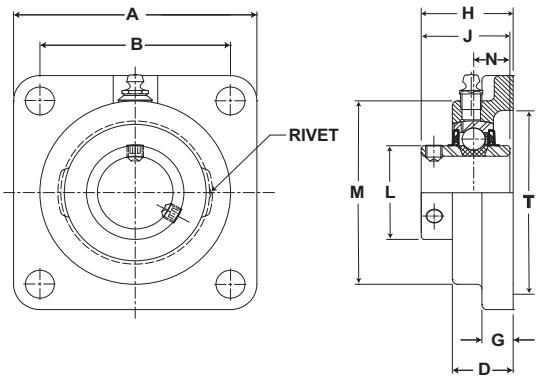

VF4S 300 Series Medium Duty Four Bolt Flanges - Setscrew Locking

Bore Diameter inch	Part No.	Bearing Insert No.	Basic Dynamic Rating lb/N	Dimensions inch / mm										Bolt Size	Unit Wt. lb/kg
				A	B	D	G	H	J	L	M	N	T Cored		
1	VF4S-316	VS-316	4381 19487	4 1/4 108.0	3 1/4 82.6	1 5/64 27.4	17/32 13.5	1 9/16 39.7	1 1/2 38.1	1 19/32 40.5	3 1/8 79.4	5/8 15.9	2 7/8 73.0	7/16	2.9 1.32
1 3/16	VF4S-319	VS-319	5782 25718	4 5/8 117.5	3 5/8 92.1	1 5/32 29.4	19/32 15.1	1 3/4 44.5	1 11/16 42.9	1 55/64 47.2	3 5/8 92.1	11/16 17.5	3 1/4 82.6	1/2	2.9 1.32
1 7/16	VF4S-323	VS-323	7340 32648	5 1/8 130.2	4 101.6	1 19/64 32.9	5/8 15.9	2 1/64 51.2	1 15/16 49.2	2 1/16 52.4	4 1/8 104.8	3/4 19.1	3 1/2 88.9	1/2	5.0 2.27
1 1/2	VF4S-324	VS-324	7901 35144	5 3/8 136.5	4 1/8 104.8	1 21/64 33.7	5/8 15.9	2 3/64 52.0	1 15/16 49.2	2 19/64 58.3	4 3/8 111.1	3/4 19.1	3 7/8 98.4	9/16	5.0 2.27
1 11/16 1 3/4	VF4S-327 VF4S-328	VS-327 VS-328	7889 35090	5 5/8 142.9	4 3/8 111.1	1 23/64 34.5	5/8 15.9	2 5/32 54.8	2 1/32 51.6	2 15/32 62.7	4 9/16 115.9	3/4 19.1	4 101.6	9/16	5.8 2.63
1 15/16 2	VF4S-331 VF4S-332	VS-331 VS-232S	9752 43377	6 3/8 161.9	5 1/8 130.2	1 33/64 38.5	13/16 20.6	2 5/16 58.7	2 3/16 55.6	2 23/32 69.1	5 1/4 133.4	7/8 22.2	4 1/4 108.0	5/8	8.0 3.63
2 3/16 2 1/4	VF4S-335 VF4S-336	VS-335 VS-236	11789 52437	6 7/8 174.6	5 5/8 142.9	1 11/16 42.9	13/16 20.6	2 11/16 68.3	2 9/16 65.1	2 63/64 75.8	5 7/16 138.1	1 25.4	5 127.0	5/8	9.9 4.49

* To obtain bolt circle multiply B x 1.414".

Metric dimensions for reference only.

Mounted Ball Bearings

Duty: Medium
Rolling Elements: Ball
Housing: Cast Iron Four Bolt Flange
Self Alignment: +/- 1.5 Degrees
Lock: BOA Concentric
Seal: Contact and Flinger
Temperature: -20° to 200°F

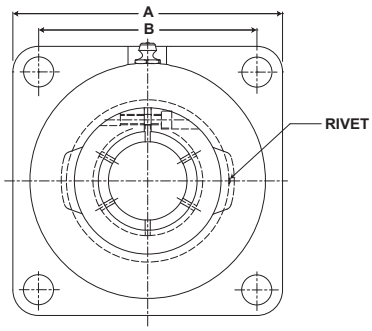

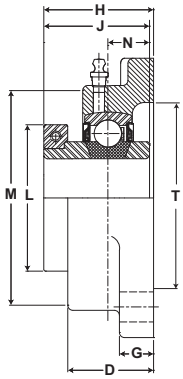

VF4B 300 Series Medium Duty Four Bolt Flanges - BOA Concentric Locking

Bore Diameter inch	Part No.	Bearing Insert No.	Basic Dynamic Rating lb/N	Dimensions inch / mm										Bolt Size	Unit Wt. lb/kg
				A	B*	D	G	H	J	L	M	N	T Cored		
1	VF4B-316	VB-316	4381 19487	4 1/4 108.0	3 1/4 82.6	1 5/64 27.4	17/32 13.5	1 5/8 41.3	1 9/16 39.7	2 1/16 52.4	3 1/8 79.4	5/8 15.9	2 7/8 73.0	7/16	3.0 1.36
1 3/16 1 1/4	VF4B-319 VF4B-320	VB-319 VB-220	5782 25718	4 5/8 117.5	3 5/8 92.1	1 5/32 29.4	19/32 15.1	1 13/16 46.0	1 3/4 44.5	2 7/16 61.9	3 5/8 92.1	11/16 17.5	3 1/4 82.6	1/2	3.0 1.36
1 7/16	VF4B-323	VB-323	7340 32648	5 1/8 130.2	4 101.6	1 19/64 32.9	5/8 15.9	2 5/64 52.8	2 50.8	2 11/16 68.3	4 1/8 104.8	3/4 19.1	3 1/2 88.9	1/2	5.1 2.31
1 8/16	VF4B-324	VB-324	7901 35144	5 3/8 136.5	4 1/8 104.8	1 21/64 33.7	5/8 15.9	2 7/64 53.6	2 50.8	2 13/16 71.4	4 3/8 111.1	3/4 19.1	3 7/8 98.4	9/16	5.1 2.31
1 11/16 1 3/4	VF4B-327 VF4B-328	VB-327 VB-328	7889 35090	5 5/8 142.9	4 3/8 111.1	1 23/64 34.5	5/8 15.9	2 7/32 56.4	2 3/32 53.2	7 3/4 196.9	4 9/16 115.9	3/4 19.1	4 101.6	9/16	5.9 2.68
1 15/16 2	VF4B-331 VF4B-332	VB-331 VB-232S	9752 43377	6 3/8 161.9	5 1/8 130.2	1 33/64 38.5	13/16 20.6	2 3/8 60.3	2 1/4 57.2	3 1/2 88.9	5 1/4 133.4	7/8 22.2	4 1/4 108.0	5/8	8.2 3.72
2 3/16	VF4B-335	VB-335	11789 52437	6 7/8 174.6	5 5/8 142.9	1 11/16 42.9	13/16 20.6	2 3/4 69.9	2 5/8 66.7	4 1/16 103.2	5 7/16 138.1	1 25.4	5 127.0	5/8	10.2 4.63

* To obtain bolt circle multiply B x 1.414".

For Replacement Lock Collar see page G-214.

Browning®

Mounted Ball Bearings

Duty: Intermediate
Rolling Elements: Ball
Housing: Cast Iron Two Bolt Flange
Self Alignment: +/- 1.5 Degrees
Lock: Setscrew
Seal: Contact
Temperature: -20° to 200°F

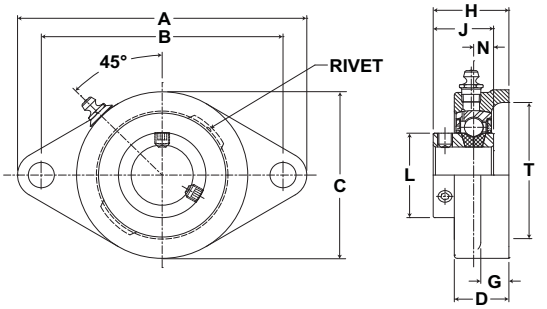

VF2S 100 Series Intermediate Duty Two Bolt Flanges - Setscrew Locking

Bore Diameter inch	Part No.	Bearing Insert No.	Basic Dynamic Rating lb/N	Dimensions inch / mm										Bolt Size	Unit Wt. lb/kg
				A	B	C	D	G	H	J	L	N	T Cored		
1/2 5/8	VF2S-108 VF2S-110	VS-108 VS-110	2108 9377	3 7/8 98.4	3 76.2	2 1/8 54.0	23/32 18.3	3/8 9.5	1 5/64 27.4	15/16 23.8	31/32 24.6	5/16 7.9	1 3/4 44.5	3/8	.8 .36
3/4	VF2S-112	VS-112	2611 11614	4 13/32 111.9	3 17/32 89.7	2 1/2 63.5	57/64 22.6	7/16 11.1	1 9/32 32.5	1 1/16 27.0	1 3/16 30.2	11/32 8.7	2 50.8	3/8	.9 .41
7/8 15/16 1	VF2S-114 VF2S-115 VF2S-116	VS-114 VS-115 VS-116	2801 12459	4 7/8 123.8	3 57/64 98.8	2 3/4 69.9	61/64 24.2	1/2 12.7	1 25/64 35.3	1 7/64 28.2	1 3/8 34.9	11/32 8.7	2 5/16 58.7	7/16	1.0 .45
1 1/8 1 3/16 1 1/4	VF2S-118 VF2S-119 VF2S-120S	VS-118 VS-119 VS-120S	4381 19487	5 9/16 141.3	4 19/32 116.7	3 1/8 79.4	1 5/64 27.4	17/32 13.5	1 15/32 37.3	1 5/32 29.4	1 19/32 40.5	3/8 9.5	2 3/4 69.9	7/16	1.6 .73
1 1/4 1 3/8 1 7/16	VF2S-120 VF2S-122 VF2S-123	VS-120 VS-122 VS-123	5782 25718	6 1/8 155.6	5 1/8 130.2	3 5/8 92.1	1 5/32 29.4	19/32 15.1	1 39/64 40.9	1 9/32 32.5	1 55/64 47.2	27/64 10.7	3 3/16 81.0	1/2	2.6 1.18
1 1/2	VF2S-124	VS-124	7340 32648	6 3/4 171.5	5 21/32 143.7	4 1/8 104.8	1 19/64 32.9	5/8 15.9	1 49/64 44.8	1 27/64 36.1	2 1/16 52.4	31/64 12.3	3 1/2 88.9	1/2	3.4 1.54
1 11/16 1 3/4	VF2S-127 VF2S-128	VS-127 VS-128	7901 35144	7 1/16 179.4	5 27/32 148.4	4 3/8 111.1	1 21/64 33.7	5/8 15.9	1 13/16 46.0	1 7/16 36.5	2 19/64 58.3	31/64 12.3	3 3/4 95.3	9/16	3.5 1.59
1 15/16 2	VF2S-131 VF2S-132S	VS-131 VS-132S	7889 35090	7 7/16 188.9	6 3/16 157.2	4 9/16 115.9	1 23/64 34.5	5/8 15.9	1 59/64 48.8	1 35/64 39.3	2 15/32 62.7	1/2 12.7	4 101.6	9/16	4.4 2.00
2 2 3/16	VF2S-132 VF2S-135	VS-132 VS-135	9752 43377	8 1/2 215.9	7 1/4 184.2	5 1/4 133.4	1 33/64 38.5	13/16 20.6	2 7/64 53.6	1 21/32 42.1	2 23/32 69.1	35/64 13.9	4 1/4 108.0	5/8	5.7 2.59

Metric dimensions for reference only.
Not all parts are available from stock. Please contact customer service for availability (800) 626-2120.
For more information on bearing capabilities outside of our standard offering, please contact Application Engineering (800) 626-2093.

Mounted Ball Bearings

Duty: Intermediate
Rolling Elements: Ball
Housing: Cast Iron Two Bolt Flange
Self Alignment: +/- 1.5 Degrees
Lock: Eccentric
Seal: Contact
Temperature: -20° to 200°F

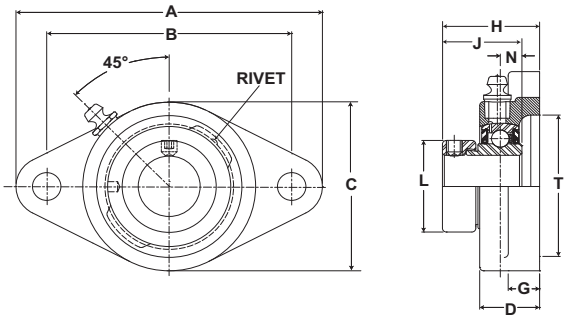

VF2E 100 Series Intermediate Duty Two Bolt Flanges - Eccentric Locking

Bore Diameter inch	Part No.	Bearing Insert No.	Basic Dynamic Rating lb/N	Dimensions inch / mm A	B	C	D	G	H	J	L	N	T Cored	Bolt Size	Unit Wt. lb/kg
1/2 5/8	VF2E-108 VF2E-110	VE-108 VE-110	2108 9377	3 7/8 98.4	3 76.2	2 1/8 54.0	23/32 18.3	3/8 9.5	1 21/64 33.7	1 3/16 30.2	1 3/16 30.2	5/16 7.9	1 3/4 44.5	3/8	1.0 .45
3/4	VF2E-112	VE-112	2611 11614	4 13/32 111.9	3 17/32 89.7	2 1/2 63.5	57/64 22.6	7/16 11.1	1 31/64 37.7	1 17/64 32.1	1 5/16 33.3	11/32 8.7	2 50.8	3/8	1.1 .50
7/8 15/16 1	VF2E-114 VF2E-115 VF2E-116	VE-114 VE-115 VE-116	2801 12459	4 7/8 123.8	3 57/64 98.8	2 3/4 69.9	61/64 24.2	1/2 12.7	1 35/64 39.3	1 17/64 32.1	1 1/2 38.1	11/32 8.7	2 5/16 58.7	7/16	1.5 .68
1 1/8 1 3/16 1 1/4	VF2E-118 VF2E-119 VF2E-120S	VE-118 VE-119 VE-120S	4381 19487	5 9/16 141.3	4 19/32 116.7	3 1/8 79.4	1 5/64 27.4	17/32 13.5	1 47/64 44.1	1 27/64 36.1	1 3/4 44.5	3/8 9.5	2 3/4 69.9	7/16	1.9 .86
1 1/4 1 3/8 1 7/16	VF2E-120 VF2E-122 VF2E-123	VE-120 VE-122 VE-123	5782 25718	6 1/8 155.6	5 1/8 130.2	3 5/8 92.1	1 5/32 29.4	19/32 15.1	1 29/32 48.4	1 37/64 40.1	2 3/16 55.6	27/64 10.7	3 3/16 81.0	1/2	2.8 1.27
1 1/2	VF2E-124	VE-124	7340 32648	6 3/4 171.5	5 21/32 143.7	4 1/8 104.8	1 19/64 32.9	5/8 15.9	2 7/64 53.6	1 49/64 44.8	2 3/8 60.3	31/64 12.3	3 1/2 88.9	1/2	3.6 1.63
1 11/16 1 3/4	VF2E-127 VF2E-128	VE-127 VE-128	7901 35144	7 1/16 179.4	5 27/32 148.4	4 3/8 111.1	1 21/64 33.7	5/8 15.9	2 5/32 54.8	1 49/64 44.8	2 1/2 63.5	31/64 12.3	3 3/4 95.3	9/16	3.8 1.72
1 15/16 2	VF2E-131 VF2E-132S	VE-131 VE-132S	7889 35090	7 7/16 188.9	6 3/16 157.2	4 9/16 115.9	1 23/64 34.5	5/8 15.9	2 5/32 54.8	1 25/32 45.2	2 3/4 69.9	1/2 12.7	4 101.6	9/16	4.5 2.04
2 2 3/16	VF2E-132 VF2E-135	VE-132 VE-135	9752 43377	8 1/2 215.9	7 1/4 184.2	5 1/4 133.4	1 33/64 38.5	13/16 20.6	2 7/16 61.9	1 63/64 50.4	3 76.2	35/64 13.9	4 1/4 108.0	5/8	6.1 2.77

For Replacement Lock Collar see page G-214.

Browning®

Mounted Ball Bearings

Duty: Standard
Rolling Elements: Ball
Housing: Cast Iron Two Bolt Flange
Self Alignment: +/- 1.5 Degrees
Lock: Setscrew
Seal: Contact and Flinger
Temperature: -20° to 200°F

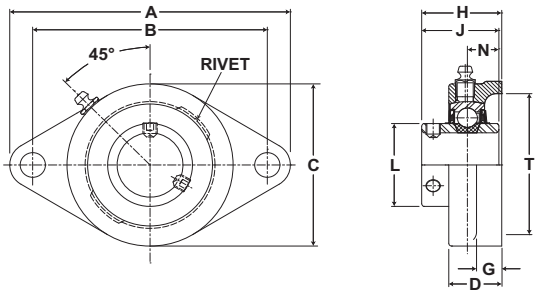

VF2S 200 Series Standard Duty Two Bolt Flanges - Setscrew Locking - Inch

Bore Diameter inch	Part No.	Bearing Insert No.	Basic Dynamic Rating lb/N	Dimensions inch / mm A	B	C	D	G	H	J	L	N	T Cored	Bolt Size	Unit Wt. lb/kg
1/2	VF2S-208	VS-208	2108	3 7/8	3	2 1/8	23/32	3/8	1 5/64	1 1/32	31/32	13/32	1 3/4	3/8	.9
5/8	VF2S-210	VS-210	9377	98.4	76.2	54.0	18.3	9.5	27.4	26.2	24.6	10.3	44.5		.41
3/4	VF2S-212	VS-212	2611 / 11614	4 13/32 / 111.9	3 17/32 / 89.7	2 1/2 / 63.5	57/64 / 22.6	7/16 / 11.1	1 9/32 / 32.5	1 7/32 / 31.0	1 3/16 / 30.2	1/2 / 12.7	2 / 50.8	3/8	1.0 / .45
7/8	VF2S-214	VS-214	2801 / 12459	4 7/8	3 57/64	2 3/4	61/64	1/2	1 7/16	1 3/8	1 3/8	9/16	2 5/16	7/16	1.1
15/16	VF2S-215	VS-215		123.8	98.8	69.9	24.2	12.7	36.5	34.9	34.9	14.3	58.7		.50
1	VF2S-216	VS-216													
1 1/8	VF2S-218	VS-218	4381 / 19487	5 9/16	4 19/32	3 1/8	1 5/64	17/32	1 9/16	1 1/2	1 19/32	5/8	2 3/4	7/16	1.7
1 3/16	VF2S-219	VS-219		141.3	116.7	79.4	27.4	13.5	39.7	38.1	40.5	15.9	69.9		.77
1 1/4	VF2S-220S	VS-220S													
1 1/4	VF2S-220	VS-220	5782 / 25718	6 1/8	5 1/8	3 5/8	1 5/32	19/32	1 3/4	1 11/16	1 55/64	11/16	3 3/16	1/2	2.7
1 3/8	VF2S-222	VS-222		155.6	130.2	92.1	29.4	15.1	44.5	42.9	47.2	17.5	81.0		1.22
1 7/16	VF2S-223	VS-223													
1 1/2	VF2S-224	VS-224	7340 / 32648	6 3/4 / 171.5	5 21/32 / 143.7	4 1/8 / 104.8	1 19/64 / 32.9	5/8 / 15.9	2 1/64 / 51.2	1 15/16 / 49.2	2 1/16 / 52.4	3/4 / 19.1	3 1/2 / 88.9	1/2	3.6 / 1.63
1 5/8	VF2S-226	VS-226	7901 / 35144	7 1/16	5 27/32	4 3/8	1 21/64	5/8	2 3/64	1 15/16	2 19/64	3/4	3 3/4	9/16	3.7
1 11/16	VF2S-227	VS-227		179.4	148.4	111.1	33.7	15.9	52.0	49.2	58.3	19.1	95.3		1.68
1 3/4	VF2S-228	VS-228													
1 15/16	VF2S-231	VS-231	7889 / 35090	7 7/16	6 3/16	4 9/16	1 23/64	5/8	2 5/32	2 1/32	2 15/32	3/4	4	9/16	4.6
2	VF2S-232S	VS-232S		188.9	157.2	115.9	34.5	15.9	54.8	51.6	62.7	19.1	101.6		2.09
2	VF2S-232	VS-232	9752 / 43377	8 1/2	7 1/4	5 1/4	1 33/64	13/16	2 5/16	2 3/16	2 23/32	7/8	4 1/4	5/8	5.9
2 3/16	VF2S-235	VS-235		215.9	184.2	133.4	38.5	20.6	58.7	55.6	69.1	22.2	108.0		2.68
2 1/4	VF2S-236	VS-236	11789 / 52437	9 1/4	7 15/16	5 7/16	1 11/16	13/16	2 11/16	2 9/16	2 63/64	1	4 3/4	5/8	9.6
2 7/16	VF2S-239	VS-239		235.0	201.6	138.1	42.9	20.6	68.3	65.1	75.8	25.4	120.7		4.35

Metric dimensions for reference only.
Not all parts are available from stock. Please contact customer service for availability (800) 626-2120.
For more information on bearing capabilities outside of our standard offering, please contact Application Engineering (800) 626-2093.

Mounted Ball Bearings

Duty: Standard
Rolling Elements: Ball
Housing: Cast Iron Two Bolt Flange
Self Alignment: +/- 1.5 Degrees
Lock: Setscrew
Seal: Contact and Flinger
Temperature: -20° to 200°F

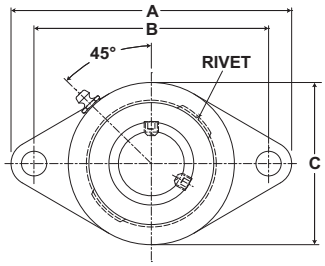

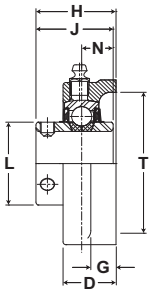

VF2S 200 Series Standard Duty Two Bolt Flanges - Setscrew Locking - Metric

Bore Diameter mm	Part No.	Bearing Insert No.	Basic Dynamic Rating N/lb	Dimensions mm / inch										Bolt Size	Unit Wt. kg/lb
				A	B	C	D	G	H	J	L	N	T Cored		
20	VF2S-20MM	VS-20MM	11614 2611	111.9 4 13/32	90.0 3 17/32	63.5 2 1/2	22.6 57/64	11.1 7/16	32.5 1 9/32	31.0 1 7/32	30.2 1 3/16	12.7 1/2	50.8 2	M10	.45 1.0
25	VF2S-25MM	VS-25MM	12459 2801	123.8 4 7/8	99.0 3 79/88	69.9 2 3/4	24.2 61/64	12.7 1/2	36.5 1 7/16	34.9 1 3/8	34.9 1 3/8	14.3 9/16	58.7 2 5/16	M10	.50 1.1
30	VF2S-30MM	VS-30MM	19487 4381	141.3 5 9/16	116.5 4 44/75	79.4 3 1/8	27.4 1 5/64	13.5 17/32	39.7 1 9/16	38.1 1 1/2	40.5 1 19/32	15.9 5/8	69.9 2 3/4	M10	.77 1.7
35	VF2S-35MM	VS-35MM	25718 5782	155.6 6 1/8	130.0 5 11/93	92.1 3 5/8	29.4 1 5/32	15.1 19/32	44.5 1 3/4	42.9 1 11/16	47.2 1 55/64	17.5 11/16	81.0 3.1875	M12	1.22 2.7
40	VF2S-40MM	VS-40MM	32648 7340	171.5 6 3/4	143.5 5 63/97	104.8 4 1/8	32.9 1 19/64	15.9 5/8	51.2 2 1/64	49.2 1 15/16	52.4 2 1/16	19.1 3/4	88.9 3 1/2	M12	1.63 3.6
45	VF2S-45MM	VS-45MM	35144 7901	179.4 7 1/16	148.5 5 11/13	111.1 4 3/8	33.7 1 21/64	15.9 5/8	52.0 2 3/64	49.2 1 15/16	57.2 2 1/4	19.1 3/4	95.3 3 3/4	M14	1.68 3.7
50	VF2S-50MM	VS-50MM	35090 7889	188.9 7 7/16	157.0 6 17/94	115.9 4 9/16	34.5 1 23/64	15.9 5/8	54.8 2 5/32	51.6 2 1/32	62.7 2 15/32	19.1 3/4	101.6 4	M16	2.09 4.6
55	VF2S-55MM	VS-55MM	43377 9752	215.9 8 1/2	184.0 7 21/86	133.4 5 1/4	38.5 1 33/64	20.6 13/16	58.7 2 5/16	55.6 2 3/16	69.1 2 23/32	22.2 7/8	108.0 4 1/4	M16	2.68 5.9
60	VF2S-60MM	VS-60MM	52437 11789	235.0 9 1/4	202.0 7 81/85	138.1 5 7/16	42.9 1 11/16	20.6 13/16	68.3 2 11/16	65.1 2 9/16	75.8 2 63/64	25.4 1	120.7 4.75	M16	4.35 9.6

Browning®

Mounted Ball Bearings

Duty: Standard
Rolling Elements: Ball
Housing: Cast Iron Two Bolt Flange
Self Alignment: +/- 1.5 Degrees
Lock: BOA Concentric
Seal: Contact and Flinger
Temperature: -20° to 200°F

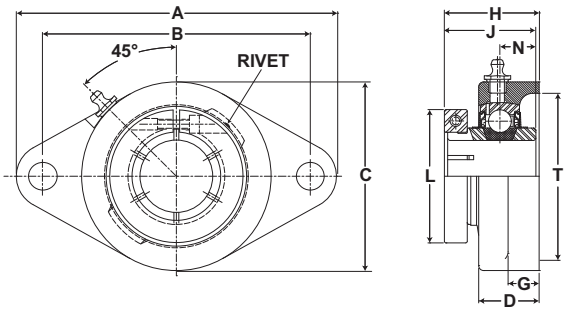

VF2B 200 Series Standard Duty Two Bolt Flanges - BOA Concentric Locking

Bore Diameter inch	Part No.	Bearing Insert No.	Basic Dynamic Rating lb/N	Dimensions inch / mm										Bolt Size	Unit Wt. lb/kg
				A	B	C	D	G	H	J	L	N	T Cored		
3/4	VF2B-212	VB-212	2611 11614	4 13/32 111.9	3 17/32 89.7	2 1/2 63.5	57/64 22.6	7/16 11.1	1 11/32 34.1	1 9/32 32.5	1 3/4 44.5	1/2 12.7	2 50.8	3/8	1.1 .50
7/8 15/16 1	VF2B-214 VF2B-215 VF2B-216	VB-214 VB-215 VB-216	2801 12459	4 7/8 123.8	3 57/64 98.8	2 3/4 69.9	61/64 24.2	1/2 12.7	1 1/2 38.1	1 7/16 36.5	1 15/16 49.2	9/16 14.3	2 5/16 58.7	7/16	1.3 .59
1 1/8 1 3/16 1 1/4	VF2B-218 VF2B-219 VF2B-220S	VB-218 VB-219 VB-220S	4381 19487	5 9/16 141.3	4 19/32 116.7	3 1/8 79.4	1 5/64 27.4	17/32 13.5	1 5/8 41.3	1 9/16 39.7	2 3/16 55.6	5/8 15.9	2 3/4 69.9	7/16	2.0 .91
1 1/4	VF2B-220	VB-220	5782 25718	6 1/8 155.6	5 1/8 130.2	3 5/8 92.1	1 5/32 29.4	19/32 15.1	1 13/16 46.0	1 3/4 44.5	2 7/16 61.9	11/16 17.5	3 3/16 81.0	1/2	3.0 1.36
1 3/8 1 7/16	VF2B-222 VF2B-223	VB-222 VB-223	5782 25718	6 1/8 155.6	5 1/8 130.2	3 5/8 92.1	1 5/32 29.4	19/32 15.1	1 13/16 46.0	1 3/4 44.5	2 9/16 65.1	11/16 17.5	3 3/16 81.0	1/2	3.0 1.36
1 1/2	VF2B-224	VB-224	7340 32648	6 3/4 171.5	5 21/32 143.7	4 1/8 104.8	1 19/64 32.9	5/8 15.9	2 5/64 52.8	2 50.8	2 11/16 68.3	3/4 19.1	3 1/2 88.9	1/2	3.3 1.50
1 5/8	VF2B-226	VB-226	7901 35144	7 1/16 179.4	5 27/32 148.4	4 3/8 111.1	1 21/64 33.7	5/8 15.9	2 7/64 53.6	2 50.8	2 13/16 71.4	3/4 19.1	3 3/4 95.3	9/16	4.0 1.81
1 11/16 1 3/4	VF2B-227 VF2B-228	VB-227 VB-228	7901 35144	7 1/16 179.4	5 27/32 148.4	4 3/8 111.1	1 21/64 33.7	5/8 15.9	2 7/64 53.6	2 50.8	2 15/16 74.6	3/4 19.1	3 3/4 95.3	9/16	4.0 1.81
1 15/16 2	VF2B-231 VF2B-232S	VB-231 VB-232S	7889 35090	7 7/16 188.9	6 3/16 157.2	4 9/16 115.9	1 23/64 34.5	5/8 15.9	2 7/32 56.4	2 3/32 53.2	3 3/8 85.7	3/4 19.1	4 101.6	9/16	4.2 1.91
2	VF2B-232	VB-232	9752 43377	8 1/2 215.9	7 1/4 184.2	5 1/4 133.4	1 33/64 38.5	13/16 20.6	2 3/8 60.3	2 1/4 57.2	3 1/2 88.9	7/8 22.2	4 1/4 108.0	5/8	7.1 3.22
2 3/16	VF2B-235	VB-235	9752 43377	8 1/2 215.9	7 1/4 184.2	5 1/4 133.4	1 33/64 38.5	13/16 20.6	2 3/8 60.3	2 1/4 57.2	3 5/8 92.1	7/8 22.2	4 1/4 108.0	5/8	7.1 3.22

For Replacement Lock Collar see page G-214.

Metric dimensions for reference only.
Not all parts are available from stock. Please contact customer service for availability (800) 626-2120.
For more information on bearing capabilities outside of our standard offering, please contact Application Engineering (800) 626-2093.

Mounted Ball Bearings

Duty: Standard
Rolling Elements: Ball
Housing: Cast Iron Two Bolt Flange
Self Alignment: +/- 1.5 Degrees
Lock: Eccentric
Seal: Contact and Flinger
Temperature: -20° to 200°F

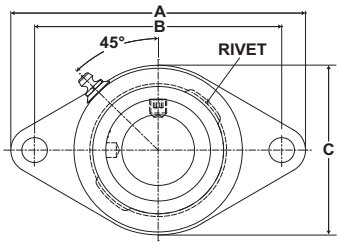

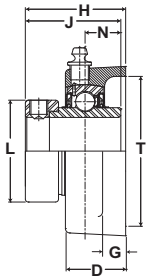

VF2E 200 Series Standard Duty Two Bolt Flanges - Eccentric Locking

Bore Diameter inch	Part No.	Bearing Insert No.	Basic Dynamic Rating lb/N	Dimensions inch / mm										Bolt Size	Unit Wt. lb/kg
				A	B	C	D	G	H	J	L	N	T Cored		
1/2 5/8	VF2E-208 VF2E-210	VE-208 VE-210	2108 9377	3 7/8 98.4	3 76.2	2 1/8 54.0	1 1/32 26.2	1/2 12.7	1 43/64 42.5	1 15/32 37.3	1 3/16 30.2	35/64 13.9	1 3/4 44.5	3/8	1.0 .45
3/4	VF2E-212	VE-212	2611 11614	4 13/32 111.9	3 17/32 89.7	2 1/2 63.5	1 5/64 27.4	1/2 12.7	1 51/64 45.6	1 23/32 43.7	1 5/16 33.3	43/64 17.1	2 50.8	3/8	1.1 .50
7/8 15/16 1	VF2E-214 VF2E-215 VF2E-216	VE-214 VE-215 VE-216	2801 12459	4 7/8 123.8	3 57/64 98.8	2 3/4 69.9	1 5/64 27.4	17/32 13.5	1 13/16 46.0	1 3/4 44.5	1 1/2 38.1	11/16 17.5	2 5/16 58.7	7/16	1.5 .68
1 1/8 1 3/16 1 1/4	VF2E-218 VF2E-219 VF2E-220S	VE-218 VE-219 VE-220S	4381 19487	5 9/16 141.3	4 19/32 116.7	3 1/8 79.4	1 13/64 30.6	17/32 13.5	2 50.8	1 29/32 48.4	1 3/4 44.5	23/32 18.3	2 3/4 69.9	7/16	2.1 .95
1 1/4 1 3/8 1 7/16	VF2E-220 VF2E-222 VF2E-223	VE-220 VE-222 VE-223	5782 25718	6 1/8 155.6	5 1/8 130.2	3 5/8 92.1	1 1/4 31.8	5/8 15.9	2 1/8 54.0	2 1/64 51.2	2 3/16 55.6	3/4 19.1	3 3/16 81.0	1/2	2.9 1.32
1 1/2	VF2E-224	VE-224	7340 32648	6 3/4 171.5	5 21/32 143.7	4 1/8 104.8	1 13/32 35.7	5/8 15.9	2 5/16 58.7	2 7/32 56.4	2 3/8 60.3	27/32 21.4	3 1/2 88.9	1/2	3.8 1.72
1 5/8 1 11/16 1 3/4	VF2E-226 VF2E-227 VF2E-228	VE-226 VE-227 VE-228	7901 35144	7 1/16 179.4	5 27/32 148.4	4 3/8 111.1	1 13/32 35.7	5/8 15.9	2 5/16 58.7	2 7/32 56.4	2 1/2 63.5	27/32 21.4	3 3/4 95.3	9/16	3.9 1.77
1 15/16	VF2E-231	VE-231	7889 35090	7 7/16 188.9	6 3/16 157.2	4 9/16 115.9	1 39/64 40.9	11/16 17.5	2 5/8 66.7	2 15/32 62.7	2 3/4 69.9	31/32 24.6	4 101.6	9/16	4.8 2.18
2 2 7/16	VF2E-232 VF2E-235	VE-232 VE-235	9752 43377	8 1/2 215.9	7 1/4 184.2	5 1/4 133.4	1 49/64 44.8	13/16 20.6	2 31/32 75.4	2 13/16 71.4	3 76.2	1 3/32 27.8	4 1/4 108.0	5/8	6.2 2.81
2 1/4 2 7/16	VF2E-236 VF2E-239	VE-236 VE-239	11789 52437	9 1/4 235.0	7 15/16 201.6	5 7/16 138.1	1 31/32 50.0	13/16 20.6	3 1/4 82.6	3 1/16 77.8	3 3/8 85.7	1 7/32 31.0	4 3/4 120.7	5/8	9.6 4.35

For Replacement Lock Collar see page G-214.

Browning®

Mounted Ball Bearings

Duty: Medium
Rolling Elements: Ball
Housing: Cast Iron Two Bolt Flange
Self Alignment: +/- 1.5 Degrees
Lock: Setscrew
Seal: Contact and Flinger
Temperature: -20° to 200°F

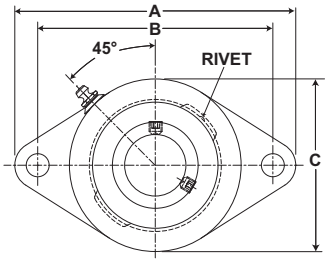

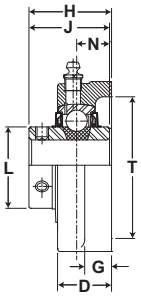

VF2S 300 Series Medium Duty Two Bolt Flanges - Setscrew Locking

Bore Diameter inch	Part No.	Bearing Insert No.	Basic Dynamic Rating lb/N	Dimensions inch / mm										Bolt Size	Unit Wt. lb/kg
				A	B	C	D	G	H	J	L	N	T Cored		
1	VF2S-316	VS-316	4381 19487	5 9/16 141.3	4 19/32 116.7	3 1/8 79.4	1 5/64 27.4	17/32 13.5	1 9/16 39.7	1 1/2 38.1	1 19/32 40.5	5/8 15.9	2 3/4 69.9	7/16	2.7 1.22
1 3/16 1 1/4	VF2S-319 VF2S-320	VS-319 VS-220	5782 25718	6 1/8 155.6	5 1/8 130.2	3 5/8 92.1	1 5/32 29.4	19/32 15.1	1 3/4 44.5	1 11/16 42.9	1 55/64 47.2	11/16 17.5	3 3/16 81.0	1/2	2.7 1.22
1 7/16	VF2S-323	VS-323	7340 32648	6 3/4 171.5	5 21/32 143.7	4 1/8 104.8	1 19/64 32.9	5/8 15.9	2 1/64 51.2	1 15/16 49.2	2 1/16 52.4	3/4 19.1	3 1/2 88.9	1/2	4.8 2.18
1 1/2	VF2S-324	VS-324	7901 35144	7 1/16 179.4	5 27/32 148.4	4 3/8 111.1	1 21/64 33.7	5/8 15.9	2 3/64 52.0	1 15/16 49.2	2 19/64 58.3	3/4 19.1	3 3/4 95.3	9/16	4.8 2.18
1 11/16 1 3/4	VF2S-327 VF2S-328	VS-327 VS-328	7889 35090	7 7/16 188.9	6 3/16 157.2	4 9/16 115.9	1 23/64 34.5	5/8 15.9	2 5/32 54.8	2 1/32 51.6	2 15/32 62.7	3/4 19.1	4 101.6	9/16	7.6 3.45
1 15/16 2	VF2S-331 VF2S-332	VS-331 VS-232S	9752 43377	8 1/2 215.9	7 1/4 184.2	5 1/4 133.4	1 33/64 38.5	13/16 20.6	2 5/16 58.7	2 3/16 55.6	2 23/32 69.1	7/8 22.2	4 1/4 108.0	5/8	9.6 4.35

Metric dimensions for reference only.
Not all parts are available from stock. Please contact customer service for availability (800) 626-2120.
For more information on bearing capabilities outside of our standard offering, please contact Application Engineering (800) 626-2093.

Mounted Ball Bearings

Duty: Medium
Rolling Elements: Ball
Housing: Cast Iron Two Bolt Flange
Self Alignment: +/- 1.5 Degrees
Lock: BOA Concentric
Seal: Contact and Flinger
Temperature: -20° to 200°F

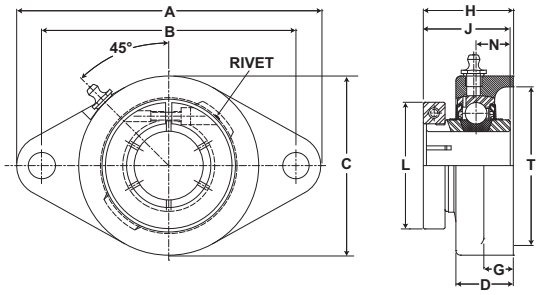

VF2B 300 Series Medium Duty Two Bolt Flanges - BOA Concentric Locking

Bore Diameter inch	Part No.	Bearing Insert No.	Basic Dynamic Rating lb/N	Dimensions inch / mm										Bolt Size	Unit Wt. lb/kg
				A	B	C	D	G	H	J	L	N	T Cored		
1	VF2B-316	VB-316	4381 19487	5 9/16 141.3	4 19/32 116.7	3 1/8 79.4	1 5/64 27.4	17/32 13.5	1 5/8 41.3	1 9/16 39.7	2 1/16 2.1	5/8 15.9	2 3/4 69.9	7/16	2.0 .91
1 3/16 1 1/4	VF2B-319 VF2B-320	VB-319 VB-220	5782 25718	6 1/8 155.6	5 1/8 130.2	3 5/8 92.1	1 5/32 29.4	19/32 15.1	1 13/16 46.0	1 3/4 44.5	2 7/16 61.9	11/16 17.5	3 3/16 81.0	1/2	3.0 1.36
1 7/16	VF2B-323	VB-323	7340 32648	6 3/4 171.5	5 21/32 143.7	4 1/8 104.8	1 19/64 32.9	5/8 15.9	2 5/64 52.8	2 50.8	2 11/16 68.3	3/4 19.1	3 1/2 88.9	1/2	3.3 1.50
1 1/2	VF2B-324	VB-324	7901 35144	7 1/16 179.4	5 27/32 148.4	4 3/8 111.1	1 21/64 33.7	5/8 15.9	2 7/64 53.6	2 50.8	2 13/16 71.4	3/4 19.1	3 3/4 95.3	9/16	4.0 1.81
1 11/16 1 3/4	VF2B-327 VF2B-328	VB-327 VB-328	7889 35090	7 7/16 188.9	6 3/16 157.2	4 9/16 115.9	1 23/64 34.5	5/8 15.9	2 7/32 56.4	2 3/32 53.2	3 1/4 82.6	3/4 19.1	4 101.6	9/16	5.2 2.36
1 15/16 2	VF2B-331 VF2B-332	VB-331 VB-232S	9752 43377	8 1/2 215.9	7 1/4 184.2	5 1/4 133.4	1 33/64 38.5	13/16 20.6	2 3/8 60.3	2 1/4 57.2	3 1/2 88.9	7/8 22.2	4 1/4 108.0	5/8	7.1 3.22

For Replacement Lock Collar see page G-214.

Browning®

Mounted Ball Bearings

Duty: Standard
Rolling Elements: Ball
Housing: Cast Iron Flange Bracket
Self Alignment: +/- 1.5 Degrees
Lock: Setscrew
Seal: Contact and Flinger
Temperature: -20° to 200°F

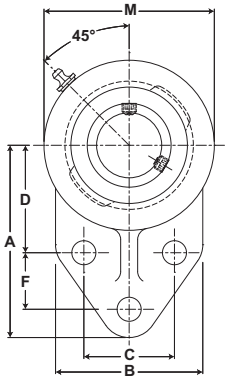

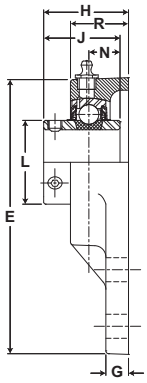

VFBS 200 Series Standard Duty Flange Brackets - Setscrew Locking

Bore Diameter inch	Part No.	Bearing Insert No.	Basic Dynamic Rating lb/N	Dimensions inch / mm A	B	C	D	E	F	G	H	J	L	M	N	R	Bolt Size	Unit Wt. lb/kg
3/4	VFBS-212	VS-212	2611 11614	3 76.2	2 3/8 60.3	1 1/2 38.1	1 11/16 42.9	4 3/16 106.4	7/8 22.2	5/16 7.9	1 11/32 34.1	1 7/32 26.2	1 3/16 30.2	2 3/8 60.3	1/2 12.7	61/64 24.2	3/8	1.1 .50
7/8 15/16 1	VFBS-214 VFBS-215 VFBS-216	VS-214 VS-215 VS-216	2801 12459	3 3/8 85.7	2 1/2 63.5	1 5/8 41.3	1 13/16 46.0	4 3/4 120.7	1 1/8 28.6	3/8 9.5	1 1/2 38.1	1 3/8 34.9	1 3/8 34.9	2 3/4 69.9	9/16 14.3	1 1/64 25.8	3/8	1.9 .86
1 1/8 1 3/16 1 1/4	VFBS-218 VFBS-219 VFBS-220S	VS-218 VS-219 VS-220S	4381 19487	3 3/4 95.3	2 3/4 69.9	1 7/8 47.6	2 1/16 52.4	5 23/64 136.1	1 1/4 31.8	3/8 9.5	1 5/8 41.3	1 1/2 38.1	1 19/32 40.5	3 7/32 81.8	5/8 15.9	1 9/64 29.0	3/8	2.8 1.27
1 1/4 1 3/8 1 7/16	VFBS-220 VFBS-222 VFBS-223	VS-220 VS-222 VS-223	5782 25718	4 1/4 108.0	3 1/4 82.6	2 50.8	2 3/8 60.3	6 1/8 155.6	1 1/4 31.8	1/2 12.7	1 7/8 47.6	1 11/16 42.9	1 55/64 47.2	3 3/4 95.3	11/16 17.5	1 9/32 32.5	1/2	2.6 1.18
1 15/16 2	VFBS-231 VFBS-232S	VS-231 VS-232S	7889 35090	5 3/16 131.8	4 101.6	2 3/4 69.9	2 15/16 74.6	7 15/32 189.7	1 5/8 41.3	1/2 12.7	2 5/32 54.8	2 1/32 51.6	2 15/32 62.7	4 9/16 115.9	3/4 19.1	1 23/64 34.5	1/2	4.2 1.91

Metric dimensions for reference only.
Not all parts are available from stock. Please contact customer service for availability (800) 626-2120.
For more information on bearing capabilities outside of our standard offering, please contact Application Engineering (800) 626-2093.

Mounted Ball Bearings

Duty: Standard
Rolling Elements: Ball
Housing: Cast Iron Flange Bracket
Self Alignment: +/- 1.5 Degrees
Lock: BOA Concentric
Seal: Contact and Flinger
Temperature: -20° to 200°F

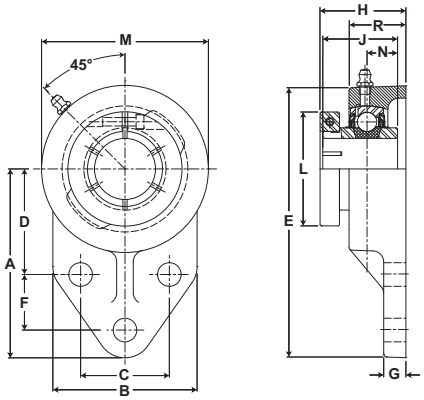

VFBB 200 Series Standard Duty Flange Brackets - BOA Concentric Locking

Bore Diameter inch	Part No.	Bearing Insert No.	Basic Dynamic Rating lb/N	Dimensions inch / mm													Bolt Size	Unit Wt. lb/kg
				A	B	C	D	E	F	G	H	J	L	M	N	R		
3/4	VFBB-212	VB-212	2611 11614	3 76.2	2 3/8 60.3	1 1/2 38.1	1 11/16 42.9	4 3/16 106.4	7/8 22.2	5/16 7.9	1 13/32 35.7	1 9/32 32.5	1 3/4 44.5	2 3/8 60.3	1/2 12.7	61/64 24.2	3/8	1.2 .54
7/8 15/16 1	VFBB-214 VFBB-215 VFBB-216	VB-214 VB-215 VB-216	2801 12459	3 3/8 85.7	2 1/2 63.5	1 5/8 41.3	1 13/16 46.0	4 3/4 120.7	1 1/8 28.6	3/8 9.5	1 9/16 39.7	1 7/16 36.5	1 15/16 49.2	2 3/4 69.9	9/16 14.3	1 1/64 25.8	3/8	2.1 .95
1 1/8 1 3/16 1 1/4	VFBB-218 VFBB-219 VFBB-220S	VB-218 VB-219 VB-220S	4381 19487	3 3/4 95.3	2 3/4 69.9	1 7/8 47.6	2 1/16 52.4	5 23/64 136.1	1 1/4 31.8	3/8 9.5	1 11/16 42.9	1 9/16 39.7	2 3/16 55.6	3 7/32 81.8	5/8 15.9	1 9/64 29.0	3/8	2.8 1.27
1 1/4	VFBB-220	VB-220	4381 19487	4 1/4 108.0	3 1/4 82.6	2 50.8	2 3/8 60.3	6 1/8 155.6	1 1/4 31.8	1/2 12.7	1 15/16 49.2	1 3/4 44.5	2 7/16 61.9	3 3/4 95.3	11/16 17.5	1 9/32 32.5	3/8	2.9 1.32
1 3/8 1 7/16	VFBB-222 VFBB-223	VB-222 VB-223	5782 25718	4 1/4 108.0	3 1/4 82.6	2 50.8	2 3/8 60.3	6 1/8 155.6	1 1/4 31.8	1/2 12.7	1 15/16 49.2	1 3/4 44.5	2 9/16 65.1	3 3/4 95.3	11/16 17.5	1 9/32 32.5	1/2	2.9 1.32
1 15/16 2	VFBB-231 VFBB-232S	VB-231 VB-232S	7889 35090	5 3/16 131.8	4 101.6	2 3/4 69.9	2 15/16 74.6	7 15/32 189.7	1 5/8 41.3	1/2 12.7	2 7/32 56.4	2 3/32 52.2	3 3/8 85.7	4 9/16 115.9	3/4 19.1	1 23/64 34.5	1/2	4.8 2.18

For Replacement Lock Collar see page G-214.

Browning®

Mounted Ball Bearings

Duty: Standard

Rolling Elements: Ball

Housing: Cast Iron Piloted Flange Cartridge

Self Alignment: +/- 1.5 Degrees

Lock: Setscrew

Seal: Contact and Flinger

Temperature: -20° to 200°F

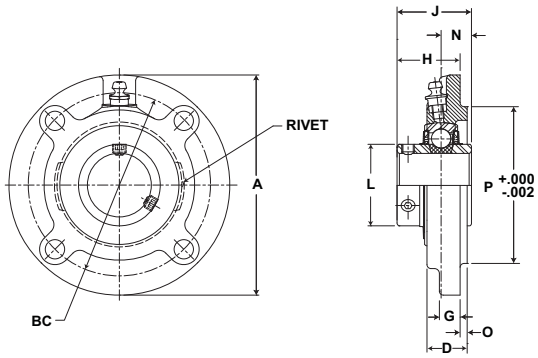

VFCS 200 Series Standard Duty Piloted Flange Cartridges - Setscrew Locking

Bore Diameter inch	Part No.	Bearing Insert No.	Basic Dynamic Rating lb/N	Dimensions inch / mm A	BC	D	G	H	J	L	N	O	P	Bolt Size	Unit Wt. lb/kg
1 1/8 1 3/16 1 1/4	VFCS-218 VFCS-219 VFCS-220S	VS-218 VS-219 VS-220S	4381 19487	4 3/8 111.1	3 5/8 92.1	1 63/64 50.4	13/32 10.3	1 1/4 31.8	1 1/2 38.1	1 19/32 40.5	5/8 15.9	7/32 5.6	3.000 76.20	5/16	2.4 1.09
1 1/4 1 3/8 1 7/16	VFCS-220 VFCS-222 VFCS-223	VS-220 VS-222 VS-223	5782 25718	5 127.0	4 1/8 104.8	1 1/16 27.0	13/32 10.3	1 5/16 33.3	1 11/16 42.9	1 55/64 47.2	11/16 17.5	11/32 8.7	3.375 85.73	3/8	3.2 1.45
1 1/2	VFCS-224	VS-224	7340 32648	5 1/4 133.4	4 3/8 111.1	1 3/16 30.2	13/32 10.3	1 1/2 38.1	1 15/16 49.2	2 1/16 52.4	3/4 19.1	13/32 10.3	3.625 92.08	3/8	3.6 1.63
1 5/8 1 11/16 1 3/4	VFCS-226 VFCS-227 VFCS-228	VS-226 VS-227 VS-228	7901 35144	6 1/8 155.6	5 1/8 130.2	1 3/16 30.2	13/32 10.3	1 1/2 38.1	1 15/16 49.2	2 19/64 58.3	3/4 19.1	13/32 10.3	4.250 107.95	7/16	4.9 2.22
1 15/16 2	VFCS-231 VFCS-232S	VS-231 VS-232S	7889 35090	6 1/8 155.6	5 1/8 130.2	1 15/64 31.4	13/32 10.3	1 19/32 40.5	2 1/16 52.4	2 15/32 62.7	3/4 19.1	7/16 11.1	4.250 107.95	7/16	5.7 2.59
2 2 3/16	VFCS-232 VFCS-235	VS-232 VS-235	9752 43377	6 3/8 161.9	5 3/8 136.5	1 3/8 34.9	13/32 10.3	1 37/64 40.1	2 13/64 56.0	2 23/32 69.1	7/8 22.2	19/32 15.1	4.500 114.30	7/16	6.0 2.72
2 1/4 2 7/16	VFCS-236 VFCS-239	VS-236 VS-239	11789 52437	7 1/8 181.0	6 152.4	1 27/32 46.8	17/32 13.5	2 50.8	2 7/8 73.0	2 63/64 75.8	1 25.4	23/32 18.3	5.000 127.00	1/2	7.1 3.22

Metric dimensions for reference only.
Not all parts are available from stock. Please contact customer service for availability (800) 626-2120.
For more information on bearing capabilities outside of our standard offering, please contact Application Engineering (800) 626-2093.

Mounted Ball Bearings

Duty: Standard

Rolling Elements: Ball

Housing: Cast Iron Piloted Flange Cartridge

Self Alignment: +/- 1.5 Degrees

Lock: BOA Concentric

Seal: Contact and Flinger

Temperature: -20° to 200°F

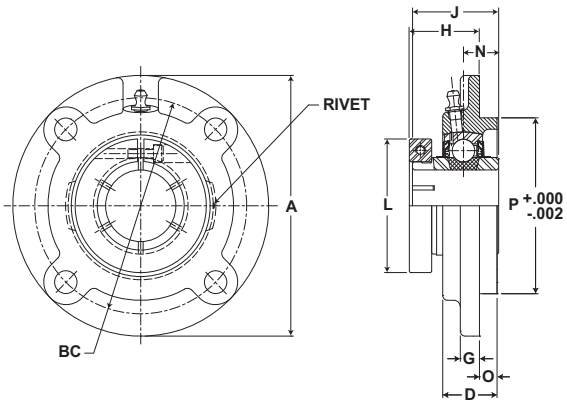

VFCB 200 Series Standard Duty Piloted Flange Cartridges - BOA Concentric Locking

Bore Diameter inch	Part No.	Bearing Insert No.	Basic Dynamic Rating lb/N	Dimensions inch / mm										Bolt Size	Unit Wt. lb/kg
				A	BC	D	G	H	J	L	N	O	P		
1 1/8 1 3/16	VFCB-218 VFCB-219	VB-218 VB-219	4381 19487	4 3/8 111.1	3 5/8 92.1	63/64 25.0	13/32 10.3	1 5/16 33.3	1 9/16 39.7	2 3/16 55.6	5/8 15.9	7/32 5.6	3.000 76.20	3/8	2.6 1.18
1 1/4	VFCB-220	VB-220	5782 25718	5 127.0	4 1/8 104.8	1 1/16 27.0	13/32 10.3	1 3/8 34.9	1 3/4 44.5	2 7/16 61.9	11/16 17.5	11/32 8.7	3.375 85.73	3/8	3.5 1.59
1 3/8 1 7/16	VFCB-222 VFCB-223	VB-222 VB-223	5782 25718	5 127.0	4 1/8 104.8	1 1/16 27.0	13/32 10.3	1 3/8 34.9	1 3/4 44.5	2 9/16 65.1	11/16 17.5	11/32 8.7	3.375 85.73	3/8	3.5 1.59
1 1/2	VFCB-224	VB-224	7340 32648	5 1/4 133.4	4 3/8 111.1	1 3/16 30.2	13/32 10.3	1 9/16 39.7	2 50.8	2 11/16 68.3	3/4 19.1	13/32 10.3	3.625 92.08	3/8	3.9 1.77
1 5/8	VFCB-226	VB-226	7901 35144	6 1/8 155.6	5 1/8 130.2	1 3/16 30.2	13/32 10.3	1 9/16 39.7	2 50.8	2 13/16 71.4	3/4 19.1	13/32 10.3	4.250 107.95	7/16	5.2 2.36
1 11/16 1 3/4	VFCB-227 VFCB-228	VB-227 VB-228	7901 35144	6 1/8 155.6	5 1/8 130.2	1 3/16 30.2	13/32 10.3	1 9/16 39.7	2 50.8	2 15/16 74.6	3/4 19.1	13/32 10.3	4.250 107.95	7/16	5.2 2.36
1 15/16 2	VFCB-231 VFCB-232S	VB-231 VB-232S	7889 35090	6 1/8 155.6	5 1/8 130.2	1 15/64 31.4	13/32 10.3	1 21/32 42.1	2 3/32 53.2	3 3/8 85.7	3/4 19.1	7/16 11.1	4.250 107.95	7/16	6.3 2.86
2	VFCB-232	VB-232	9752 43377	6 3/8 161.9	5 3/8 136.5	1 3/8 34.9	13/32 10.3	1 41/64 41.7	2 1/4 57.2	3 1/2 88.9	7/8 22.2	19/32 15.1	4.500 114.30	7/16	6.6 2.99
2 3/16	VFCB-235	VB-235	9752 43377	6 3/8 161.9	5 3/8 136.5	1 3/8 34.9	13/32 10.3	1 41/64 41.7	2 1/4 57.2	3 5/8 92.1	7/8 22.2	19/32 15.1	4.500 114.30	7/16	6.6 2.99
2 1/4	VFCB-236	VB-236	11789 52437	7 1/8 181.0	6 152.4	1 27/32 46.8	17/32 13.5	2 1/16 52.4	2 5/8 66.7	4 1/16 103.2	1 25.4	23/32 18.3	5.000 127.00	1/2	8.3 3.76
2 7/16	VFCB-239	VB-239	11789 52437	7 1/8 181.0	6 152.4	1 27/32 46.8	17/32 13.5	2 1/16 52.4	2 5/8 66.7	4 1/8 104.8	1 25.4	23/32 18.3	5.000 127.00	1/2	8.3 3.76

For Replacement Lock Collar see page G-214.

Browning®

Mounted Ball Bearings

Duty: Medium

Rolling Elements: Ball

Housing: Cast Iron Piloted Flange Cartridge

Self Alignment: +/- 1.5 Degrees

Lock: Setscrew

Seal: Contact and Flinger

Temperature: -20° to 200°F

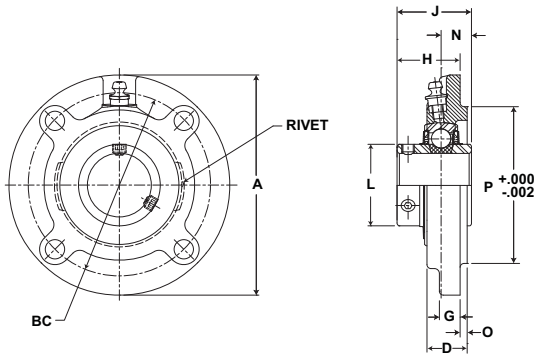

VFCS 300 Series Medium Duty Piloted Flange Cartridges - Setscrew Locking

Bore Diameter inch	Part No.	Bearing Insert No.	Basic Dynamic Rating lb/N	Dimensions inch / mm										Bolt Size	Unit Wt. lb/kg
				A	BC	D	G	H	J	L	N	O	P		
1	VFCS-316	VS-316	4381 19487	4 3/8 111.1	3 5/8 92.1	63/64 25.0	13/32 10.3	1 1/4 31.8	1 1/2 38.1	1 19/32 40.5	5/8 15.9	7/32 5.6	3.000 76.20	5/16	2.5 1.13
1 3/16 1 1/4	VFCS-319 VFCS-320	VS-319 VS-220	5782 25718	5 127.0	4 1/8 104.8	1 1/16 27.0	13/32 10.3	1 5/16 33.3	1 11/16 42.9	1 55/64 47.2	11/16 17.5	11/32 8.7	3.375 85.73	3/8	3.2 1.45
1 7/16	VFCS-323	VS-323	7340 32648	5 1/4 133.4	4 3/8 111.1	1 3/16 30.2	13/32 10.3	1 1/2 38.1	1 15/16 49.2	2 1/16 52.4	3/4 19.1	13/32 10.3	3.625 92.08	3/8	3.7 1.68
1 1/2	VFCS-324	VS-324	7901 35144	6 1/8 155.6	5 1/8 130.2	1 3/16 30.2	13/32 10.3	1 1/2 38.1	1 15/16 49.2	2 19/64 58.3	3/4 19.1	13/32 10.3	4.250 107.95	7/16	5.0 2.27
1 11/16 1 3/4	VFCS-327 VFCS-328	VS-327 VS-328	7889 35090	6 1/8 155.6	5 1/8 130.2	1 15/64 31.4	13/32 10.3	1 19/32 40.5	2 1/32 51.6	2 15/32 62.7	3/4 19.1	7/16 11.1	4.250 107.95	7/16	5.8 2.63
1 15/16 2	VFCS-331 VFCS-332	VS-331 VS-232	9752 43377	6 3/8 161.9	5 3/8 136.5	1 3/8 34.9	13/32 10.3	1 37/64 40.1	2 3/16 55.6	2 23/32 69.1	7/8 22.2	19/32 15.1	4.500 114.30	7/16	6.0 2.72
2 3/16 2 1/4	VFCS-335 VFCS-336	VS-335 VS-236	11789 52437	7 1/8 181.0	6 152.4	1 27/32 46.8	17/32 13.5	2 50.8	2 7/16 61.9	2 63/64 75.8	1 25.4	27/32 21.4	5.000 127.00	1/2	6.1 2.77

Metric dimensions for reference only.

Mounted Ball Bearings

Duty: Medium

Rolling Elements: Ball

Housing: Cast Iron Piloted Flange Cartridge

Self Alignment: +/- 1.5 Degrees

Lock: BOA Concentric

Seal: Contact and Flinger

Temperature: -20° to 200°F

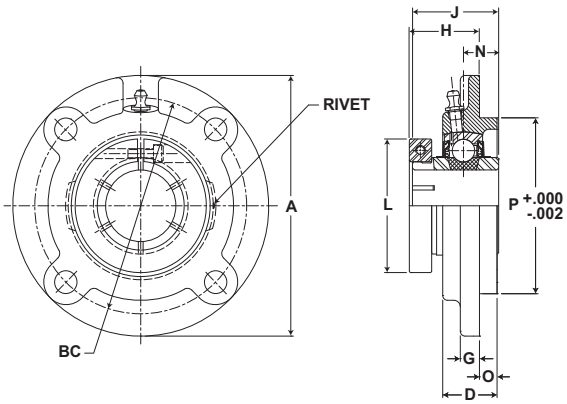

VFCB 300 Series Medium Duty Piloted Flange Cartridges - BOA Concentric Locking

Bore Diameter inch	Part No.	Bearing Insert No.	Basic Dynamic Rating lb/N	Dimensions inch / mm										Bolt Size	Unit Wt. lb/kg
				A	BC	D	G	H	J	L	N	O	P		
1	VFCB-316	VB-316	4381 19487	4 3/8 111.1	3 5/8 92.1	63/64 25.0	13/32 10.3	1 5/16 33.3	1 9/16 39.7	2 1/16 52.4	5/8 15.9	7/32 5.6	3.000 76.20	3/16	2.7 1.22
1 3/16 1 1/4	VFCB-319 VFCB-320	VB-319 VB-220	5782 25718	5 127.0	4 1/8 104.8	1 1/16 27.0	13/32 10.3	1 3/8 34.9	1 3/4 44.5	2 7/16 61.9	11/16 17.5	11/32 8.7	3.375 85.73	3/8	3.7 1.68
1 7/16	VFCB-323	VB-323	7340 32648	5 1/4 133.4	4 3/8 111.1	1 3/16 30.2	13/32 10.3	1 9/16 39.7	2 50.8	2 11/16 68.3	3/4 19.1	13/32 10.3	3.625 92.08	3/8	4.2 1.91
1 1/2	VFCB-324	VB-324	7901 35144	6 1/8 155.6	5 1/8 130.2	1 3/16 30.2	13/32 10.3	1 9/16 39.7	2 50.8	2 13/16 71.4	3/4 19.1	13/32 10.3	4.250 107.95	7/16	5.8 2.63
1 11/16 1 3/4	VFCB-327 VFCB-328	VB-327 VB-328	7889 35090	6 1/8 155.6	5 1/8 130.2	1 15/64 31.4	13/32 10.3	1 23/32 43.7	2 3/32 53.2	3 1/4 82.6	3/4 19.1	7/16 11.1	4.250 107.95	7/16	6.8 3.08
1 15/16 2	VFCB-331 VFCB-332	VB-331 VB-232	9752 43377	6 3/8 161.9	5 3/8 136.5	1 3/8 34.9	13/32 10.3	1 51/64 45.6	2 1/4 57.2	3 1/2 88.9	7/8 22.2	19/32 15.1	4.500 114.30	7/16	7.1 3.22
2 3/16	VFCB-335	VB-335	11789 52437	7 1/8 181.0	6 152.4	1 27/32 46.8	13/32 10.3	2 1/16 52.4	2 5/8 66.7	4 1/16 103.2	1 9/32 32.5	27/32 21.4	5.000 127.00	1/2	7.7 3.49

For Replacement Lock Collar see page G-214.

Browning®

Mounted Ball Bearings

Duty: Intermediate

Rolling Elements: Ball

Housing: Cast Iron Wide Slot Take Up

Self Alignment: +/- 1.5 Degrees

Lock: Setscrew

Seal: Contact

Temperature: -20° to 200°F

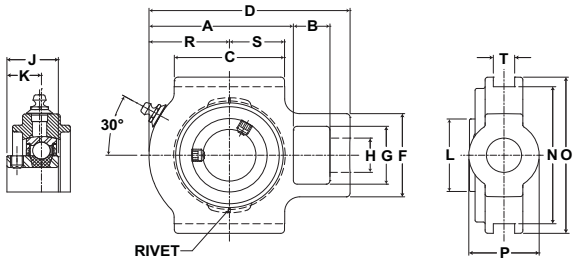

VTWS 100 Series Intermediate Duty Wide Slot Take Ups - Setscrew Locking

Bore Diameter inch	Part No.	Bearing Insert No.	Basic Dynamic Rating lb/N	Dimensions inch / mm A	B	C	D	F	G	H Core	J	K	L	N	O	P Hub	R	S	T	Unit Wt. lb/kg
3/4	VTWS-112	VS-112	2611 11614	3 76.2	5/8 15.9	2 1/4 57.2	4 101.6	1 7/8 47.6	1 1/4 31.8	3/4 19.1	1 1/16 27.0	23/32 18.3	1 3/16 30.2	3 76.2	3 1/2 88.9	1 3/8 34.9	1 7/16 36.5	1 1/8 28.6	17/32 13.5	1.6 .73
7/8 15/16 1	VTWS-114 VTWS-115 VTWS-116	VS-114 VS-115 VS-116	2801 12459	3 5/64 78.2	5/8 15.9	2 1/4 57.2	4 3/32 104.0	1 7/8 47.6	1 1/4 31.8	3/4 19.1	1 7/64 28.2	49/64 19.4	1 3/8 34.9	3 76.2	3 1/2 88.9	1 1/2 38.1	1 9/16 39.7	1 1/8 28.6	17/32 13.5	1.7 .77
1 1/8 1 3/16 1 1/4	VTWS-118 VTWS-119 VTWS-120S	VS-118 VS-119 VS-120S	4381 19487	3 3/8 85.7	3/4 19.1	2 1/2 63.5	4 5/8 117.5	2 1/8 54.0	1 7/16 36.5	7/8 22.2	1 5/32 29.4	25/32 19.8	1 19/32 40.5	3 1/2 88.9	4 101.6	1 3/4 44.5	1 25/32 45.2	1 1/4 31.8	17/32 13.5	2.4 1.09
1 1/4 1 3/8 1 7/16	VTWS-120 VTWS-122 VTWS-123	VS-120 VS-122 VS-123	5782 25718	3 3/4 95.3	3/4 19.1	2 3/4 69.9	5 127.0	2 1/8 54.0	1 7/16 36.5	7/8 22.2	1 9/32 32.5	55/64 21.8	1 55/64 47.2	3 1/2 88.9	4 101.6	1 3/4 44.5	2 50.8	1 3/8 34.9	17/32 13.5	3.1 1.41
1 1/2	VTWS-124	VS-124	7340 32648	4 7/32 107.2	3/4 19.1	3 1/4 82.6	5 19/32 142.1	2 3/4 69.9	1 15/16 49.2	1 1/8 28.6	1 27/64 36.1	15/16 23.8	2 1/16 52.4	4 101.6	4 1/2 114.3	2 1/8 54.0	2 3/16 55.6	1 5/8 41.3	11/16 17.5	4.7 2.13
1 11/16 1 3/4	VTWS-127 VTWS-128	VS-127 VS-128	7901 35144	4 3/8 111.1	3/4 19.1	3 1/4 82.6	5 3/4 146.1	2 3/4 69.9	1 15/16 49.2	1 1/8 28.6	1 7/16 36.5	61/64 24.2	2 19/64 58.3	4 101.6	4 1/2 114.3	2 1/8 54.0	2 1/4 57.2	1 5/8 41.3	11/16 17.5	5.2 2.36
1 15/16 2	VTWS-131 VTWS-132S	VS-131 VS-132S	7889 35090	4 17/32 115.1	3/4 19.1	3 3/8 85.7	5 29/32 150.0	2 3/4 69.9	1 15/16 49.2	1 1/8 28.6	1 35/64 39.3	1 3/64 26.6	2 15/32 62.7	4 101.6	4 1/2 114.3	2 1/8 54.0	2 5/16 58.7	1 11/16 42.9	11/16 17.5	5.4 2.45
2 2 3/16	VTWS-132 VTWS-135	VS-132 VS-135	9752 43377	5 3/32 129.4	1 25.4	3 3/4 95.3	6 27/32 173.8	3 5/8 92.1	2 1/2 63.5	1 3/8 34.9	1 21/32 42.1	1 7/64 28.2	2 23/32 69.1	5 1/8 130.2	5 3/4 146.1	2 1/2 63.5	2 9/16 65.1	1 7/8 47.6	1 1/16 27.0	8.0 3.63

OBSOLETE!
Please use VTWS 200 Series on page G-187

Refer to page G-190 for Frames.

Bore Size	Frame Series
3/4" to 1"	10
1 1/8" to 1 7/16"	23
1 1/2" to 2"	31
2" to 2 3/16"	39

Metric dimensions for reference only.

Mounted Ball Bearings

Duty: Intermediate
Rolling Elements: Ball
Housing: Cast Iron Wide Slot Take Up
Self Alignment: +/- 1.5 Degrees
Lock: Eccentric
Seal: Contact
Temperature: -20° to 200°F

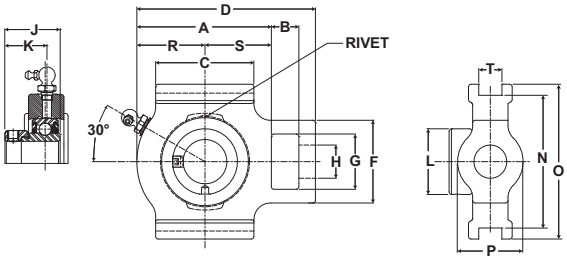

VTWE 100 Series Intermediate Duty Wide Slot Take Ups - Eccentric Locking

Bore Diameter inch	Part No.	Bearing Insert No.	Basic Dynamic Rating lb/N	Dimensions inch / mm																Unit Wt. lb/kg
				A	B	C	D	F	G	H Core	J	K	L	N	O	P Hub	R	S	T	
3/4	VTWE-112	VE-112	2611 11614	3 76.2	5/8 15.9	2 1/4 57.2	4 101.6	1 7/8 47.6	1 1/4 31.8	3/4 19.1	1 17/64 32.1	59/64 23.4	1 5/16 33.3	3 76.2	3 1/2 88.9	1 3/8 34.9	1 7/16 36.5	1 9/16 39.7	17/32 13.5	1.8 .82
7/8 15/16 1	VTWE-114 VTWE-115 VTWE-116	VE-114 VE-115 VE-116	2801 12459	3 5/64 78.2	5/8 15.9	2 1/4 57.2	4 3/32 104.0	1 7/8 47.6	1 1/4 31.8	3/4 19.1	1 17/64 32.1	59/64 23.4	1 1/2 38.1	3 76.2	3 1/2 88.9	1 1/2 38.1	1 9/16 39.7	1 17/32 38.9	17/32 13.5	1.9 .86
1 1/8 1 3/16 1 1/4	VTWE-118 VTWE-119 VTWE-120S	VE-118 VE-119 VE-120S	4381 19487	3 3/8 85.7	3/4 19.1	2 1/2 63.5	4 5/8 117.5	2 1/8 54.0	1 7/16 36.5	7/8 22.2	1 27/64 36.1	1 3/64 26.6	1 3/4 44.5	3 1/2 88.9	4 101.6	1 3/4 44.5	1 25/32 45.2	1 19/32 40.5	17/32 13.5	2.8 1.27
1 1/4 1 3/8 1 7/16	VTWE-120 VTWE-122 VTWE-123	VE-120 VE-122 VE-123	5782 25718	3 3/4 95.3	3/4 19.1	2 3/4 69.9	5 127.0	2 1/8 54.0	1 7/16 36.5	7/8 22.2	1 37/64 40.1	1 5/32 29.4	2 3/16 55.6	3 1/2 88.9	4 101.6	1 3/4 44.5	2 50.8	1 3/4 44.5	17/32 13.5	3.5 1.59
1 1/2	VTWE-124	VE-124	7340 32648	4 7/32 107.2	3/4 19.1	3 1/4 82.6	5 19/32 142.1	2 3/4 69.9	1 15/16 49.2	1 1/8 28.6	1 49/64 44.8	1 9/32 32.5	2 3/8 60.3	4 101.6	4 1/2 114.3	2 1/8 54.0	2 3/16 55.6	2 1/32 51.6	11/16 17.5	5.2 2.36
1 11/16 1 3/4	VTWE-127 VTWE-128	VE-127 VE-128	7901 35144	4 3/8 111.1	3/4 19.1	3 1/4 82.6	5-3/4 146.1	2 3/4 69.9	1 15/16 49.2	1 1/8 28.6	1 49/64 44.8	1 9/32 32.5	2 1/2 63.5	4 101.6	4 1/2 114.3	2 1/8 54.0	2 1/4 57.2	2 1/8 54.0	11/16 17.5	5.8 2.63
1 15/16 2	VTWE-131 VTWE-132S	VE-131 VE-132S	7889 35090	4 17/32 115.1	3/4 19.1	3 3/8 85.7	5 29/32 150.0	2 3/4 69.9	1 15/16 49.2	1 1/8 28.6	1 25/32 45.2	1 9/32 32.5	2 3/4 69.9	4 101.6	4 1/2 114.3	2 1/8 54.0	2 5/16 58.7	2 7/32 56.4	11/16 17.5	6.1 2.77
2 2 3/16	VTWE-132 VTWE-135	VE-132 VE-135	9752 43377	5 3/32 129.4	1 25.4	3 3/4 95.3	6 27/32 173.8	3 5/8 92.1	2 1/2 63.5	1 3/8 34.9	1 63/64 50.4	1 7/16 36.5	3 76.2	5 1/8 130.2	5 3/4 146.1	2 1/2 63.5	2 9/16 65.1	2 17/32 64.3	1 1/16 27.0	8.7 3.95

Refer to page G-190 for Frames. For Replacement Lock Collar see page G-214.

Bore Size	Frame Series
3/4" to 1"	10
1 1/8" to 1 7/16"	23
1 1/2" to 2"	31
2" to 2 3/16"	39

Metric dimensions for reference only.

Browning®

Mounted Ball Bearings

Duty: Standard
Rolling Elements: Ball
Housing: Cast Iron Wide Slot Take Up
Self Alignment: +/- 1.5 Degrees
Lock: Setscrew
Seal: Contact and Flinger
Temperature: -20° to 200°F

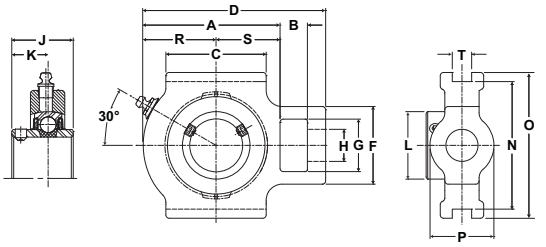

VTWS 200 Series Standard Duty Wide Slot Take Ups - Setscrew Locking

Bore Diameter inch	Part No.	Bearing Insert No.	Basic Dynamic Rating lb/N	Dimensions inch / mm A	B	C	D	F	G	H Core	J	K	L	N	O	P Hub	R	S	T	Unit Wt. lb/kg
1/2	VTWS-208	VS-208	2108	2 11/16	5/8	2	3 11/16	1 7/8	1 1/4	3/4	1 1/32	5/8	31/32	3	3 1/2	1 3/8	1 5/16	1 3/8	17/32	1.5
5/8	VTWS-210	VS-210	9377	68.3	15.9	50.8	93.7	47.6	31.8	19.1	26.2	15.9	24.6	76.2	88.9	34.9	33.3	34.9	13.5	.68
3/4	VTWS-212	VS-212	2611 / 11614	3 / 76.2	5/8 / 15.9	2 1/4 / 57.2	4 / 101.6	1 7/8 / 47.6	1 1/4 / 31.8	3/4 / 19.1	1 7/32 / 31.0	23/32 / 18.3	1 3/16 / 30.2	3 / 76.2	3 1/2 / 88.9	1 3/8 / 34.9	1 7/16 / 36.5	1 9/16 / 39.7	17/32 / 13.5	1.7 / .77
7/8	VTWS-214	VS-214	2801 / 12459	3 5/64	5/8	2 1/4	4 3/32	1 7/8	1 1/4	3/4	1 3/8	13/16	1 3/8	3	3 1/2	1 1/2	1 9/16	1 17/32	17/32	1.6
15/16	VTWS-215	VS-215		78.2	15.9	57.2	104.0	47.6	31.8	19.1	34.9	20.6	34.9	76.2	88.9	38.1	39.7	38.9	13.5	.73
1	VTWS-216	VS-216																		
1 1/8	VTWS-218	VS-218	4381 / 19487	3 3/8	3/4	2 1/2	4 5/8	2 1/8	1 7/16	7/8	1 1/2	7/8	1 19/32	3 1/2	4	1 3/4	1 25/32	1 19/32	17/32	2.4
1 3/16	VTWS-219	VS-219		85.7	19.1	63.5	117.5	54.0	36.5	22.2	38.1	22.2	40.5	88.9	101.6	44.5	45.2	40.5	13.5	1.09
1 1/4	VTWS-220S	VS-220S																		
1 1/4	VTWS-220	VS-220	5782 / 25718	3 3/4	3/4	2 3/4	5	2 1/8	1 7/16	7/8	1 11/16	1	1 55/64	3 1/2	4	1 3/4	2	1 3/4	17/32	3.3
1 3/8	VTWS-222	VS-222		95.3	19.1	69.9	127.0	54.0	36.5	22.2	42.9	25.4	47.2	88.9	101.6	44.5	50.8	44.5	13.5	1.50
1 7/16	VTWS-223	VS-223																		
1 1/2	VTWS-224	VS-224	7340 / 32648	4 7/32	3/4	3 1/4	5 19/32	2 3/4	1 15/16	1 1/8	1 15/16	1 3/16	2 1/16	4	4 1/2	2 1/8	2 3/16	2 1/32	11/16	5.0
				107.2	19.1	82.6	142.1	69.9	49.2	28.6	49.2	30.2	52.4	101.6	114.3	54.0	55.6	51.6	17.5	2.27
1 5/8	VTWS-226	VS-226	7901 / 35144	4 3/8	3/4	3 1/4	5 3/4	2 3/4	1 15/16	1 1/8	1 15/16	1 3/16	2 19/64	4	4 1/2	2 1/8	2 1/4	2 1/8	11/16	5.6
1 11/16	VTWS-227	VS-227		111.1	19.1	82.6	146.1	69.9	49.2	28.6	49.2	30.2	58.3	101.6	114.3	54.0	57.2	54.0	17.5	2.54
1 3/4	VTWS-228	VS-228																		
1 15/16	VTWS-231	VS-231	7889 / 35090	4 17/32	3/4	3 3/8	5 29/32	2 3/4	1 15/16	1 1/8	2 1/32	1 9/32	2 15/32	4	4 1/2	2 1/8	2 5/16	2 7/32	11/16	5.8
2	VTWS-232S	VS-232S		115.1	19.1	85.7	150.0	69.9	49.2	28.6	51.6	32.5	62.7	101.6	114.3	54.0	58.7	56.4	17.5	2.63
2	VTWS-232	VS-232	9752 / 43377	5 3/32	1	3 3/4	6 27/32	3 5/8	2 1/2	1 3/8	2 3/16	1 5/16	2 23/32	5 1/8	5 3/4	2 1/2	2 9/16	2 17/32	1 1/16	8.4
2 3/16	VTWS-235	VS-235		129.4	25.4	95.3	173.8	92.1	63.5	34.9	55.6	33.3	69.1	130.2	146.1	63.5	65.1	64.3	27.0	3.81
2 7/16	VTWS-239	VS-239	11789 / 52437	5 1/2	1	4	7 1/4	3 5/8	2 1/2	1 3/8	2 9/16	1 9/16	2 63/64	5 1/8	5 3/4	2 1/2	2 27/32	2 21/32	1 1/16	9.3
				139.7	25.4	101.6	184.2	92.1	63.5	34.9	65.1	39.7	75.8	130.2	146.1	63.5	72.2	67.5	27.0	4.22

Refer to page G-190 for Frames.

Bore Size	Frame Series
1/2" to 1"	10
1 1/8" to 1 7/16"	23
1 1/2" to 2"	31
2" to 2 7/16"	39

Metric dimensions for reference only.

Mounted Ball Bearings

Duty: Standard
Rolling Elements: Ball
Housing: Cast Iron Wide Slot Take Up
Self Alignment: +/- 1.5 Degrees
Lock: Eccentric
Seal: Contact and Flinger
Temperature: -20° to 200°F

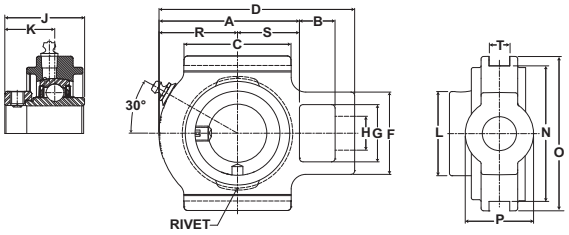

VTWE 200 Series Standard Duty Wide Slot Take Ups - Eccentric Locking

Bore Diameter inch	Part No.	Bearing Insert No.	Basic Dynamic Rating lb/N	Dimensions inch / mm A	B	C	D	F	G	H Core	J	K	L	N	O	P Hub	R	S	T	Unit Wt. lb/kg
3/4	VTWE-212	VE-212	2611 11614	3 76.2	5/8 15.9	2 1/4 57.2	4 101.6	1 7/8 47.6	1 1/4 31.8	3/4 19.1	1 23/32 43.7	1 3/64 26.6	1 5/16 33.3	3 76.2	3 1/2 88.9	1 3/8 34.9	1 7/16 36.5	1 9/16 39.7	17/32 13.5	1.8 .82
7/8 15/16 1	VTWE-214 VTWE-215 VTWE-216	VE-214 VE-215 VE-216	2801 12459	3 5/64 78.2	5/8 15.9	2 1/4 57.2	4 3/32 104.0	1 7/8 47.6	1 1/4 31.8	3/4 19.1	1 3/4 44.5	1 1/16 27.0	1 1/2 38.1	3 76.2	3 1/2 88.9	1 1/2 38.1	1 9/16 39.7	1 17/32 38.9	17/32 13.5	1.9 .86
1 1/8 1 3/16	VTWE-218 VTWE-219	VE-218 VE-219	4381 19487	3 3/8 85.7	3/4 19.1	2 1/2 63.5	4 5/8 117.5	2 1/8 54.0	1 7/16 36.5	7/8 22.2	1 29/32 48.4	1 3/16 30.2	1 3/4 44.5	3 1/2 88.9	4 101.6	1 3/4 44.5	1 25/32 45.2	1 19/32 40.5	17/32 13.5	2.8 1.27
1 1/4 1 3/8 1 7/16	VTWE-220 VTWE-222 VTWE-223	VE-220 VE-222 VE-223	5782 25718	3 3/4 95.3	3/4 19.1	2 3/4 69.9	5 127.0	2 1/8 54.0	1 7/16 36.5	7/8 22.2	2 1/64 51.2	1 9/32 32.5	2 3/16 55.6	3 1/2 88.9	4 101.6	1 3/4 44.5	2 50.8	1 3/4 44.5	17/32 13.5	3.5 1.59
1 1/2	VTWE-224	VE-224	7340 32648	4 7/32 107.2	3/4 19.1	3 1/4 82.6	5 19/32 142.1	2 3/4 69.9	1 15/16 49.2	1 1/8 28.6	2 7/32 56.4	1 3/8 34.9	2 3/8 60.3	4 101.6	4 1/2 114.3	2 1/8 54.0	2 3/16 55.6	2 1/32 51.6	11/16 17.5	5.2 2.36
1 5/8 1 11/16 1 3/4	VTWE-226 VTWE-227 VTWE-228	VE-226 VE-227 VE-228	7901 35144	4 3/8 111.1	3/4 19.1	3 1/4 82.6	5 3/4 146.1	2 3/4 69.9	1 15/16 49.2	1 1/8 28.6	2 7/32 56.4	1 3/8 34.9	2 1/2 63.5	4 101.6	4 1/2 114.3	2 1/8 54.0	2 1/4 57.2	2 1/8 54.0	11/16 17.5	5.8 2.63
1 15/16	VTWE-231	VE-231	7889 35090	4 17/32 115.1	3/4 19.1	3 3/8 85.7	5 29/32 150.0	2 3/4 69.9	1 15/16 49.2	1 1/8 28.6	2 15/32 62.7	1 1/2 38.1	2 3/4 69.9	4 101.6	4 1/2 114.3	2 1/8 54.0	2 5/16 58.7	2 7/32 56.4	11/16 17.5	6.1 2.77
2 2 3/16	VTWE-232 VTWE-235	VE-232 VE-235	9752 43377	5 3/32 129.4	1 25.4	3 3/4 95.3	6 27/32 173.8	3 5/8 92.1	2 1/2 63.5	1 3/8 34.9	2 13/16 71.4	1 23/32 43.7	3 76.2	5 1/8 130.2	5 3/4 146.1	2 1/2 63.5	2 9/16 65.1	2 17/32 64.3	1 1/16 27.0	8.7 3.95
2 7/16	VTWE-239	VE-239	11789 52437	5 1/2 139.7	1 25.4	4 101.6	7 1/4 184.2	3 5/8 92.1	2 1/2 63.5	1 3/8 34.9	3 1/16 77.8	1 27/32 46.8	3 3/8 85.7	5 1/8 130.2	5 3/4 146.1	2 1/2 63.5	2 27/32 72.2	2 21/32 67.5	1 1/16 27.0	9.6 4.35

Refer to page G-190 for Frames. For Replacement Lock Collar see page G-214.

Bore Size	Frame Series
3/4" to 1"	10
1 1/8" to 1 7/16"	23
1 1/2" to 2"	31
2" to 2 7/16"	39

Metric dimensions for reference only.

Browning® Mounted Ball Bearings

Duty: Medium
Rolling Elements: Ball
Housing: Cast Iron Wide Slot Take Up
Self Alignment: +/- 1.5 Degrees
Lock: Setscrew
Seal: Contact and Flinger
Temperature: -20° to 200°F

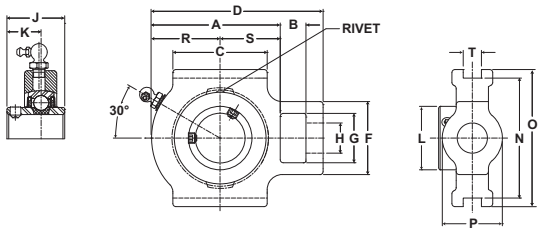

VTWS 300 Series Medium Duty Wide Slot Take Ups - Setscrew Locking

Bore Diameter inch	Part No.	Bearing Insert No.	Basic Dynamic Rating lb/N	Dimensions inch / mm																Unit Wt. lb/kg
				A	B	C	D	F	G	H Core	K	J D	L	N	O	P Hub	R	S	T	
1	VTWS-316	VS-316	4381 19487	3 3/8 85.7	3/4 19.1	2 1/2 63.5	4 5/8 117.5	2 1/8 54.0	1 7/16 36.5	7/8 22.2	7/8 22.2	1 1/2 38.1	1 19/32 40.5	3 1/2 88.9	4 101.6	1 3/4 44.5	1 25/32 45.2	1 19/32 40.5	17/32 13.5	3.1 1.41
1 3/16	VTWS-319	VS-319	5782 25718	3 3/4 95.3	3/4 19.1	2 3/4 69.9	5 127.0	2 1/8 54.0	1 7/16 36.5	7/8 22.2	1 25.4	1 11/16 42.9	1 55/64 47.2	3 1/2 88.9	4 101.6	1 3/4 44.5	2 50.8	1 3/4 44.5	17/32 13.5	4.0 1.81
1 7/16	VTWS-323	VS-323	7340 32648	4 7/32 107.2	3/4 19.1	3 1/4 82.6	5 19/32 142.1	2 3/4 69.9	1 15/16 49.2	1 1/8 28.6	1 3/16 30.2	1 15/16 49.2	2 1/16 52.4	4 101.6	4 1/2 114.3	2 1/8 54.0	2 3/16 55.6	2 1/32 51.6	11/16 17.5	5.7 2.59
1 1/2	VTWS-324	VS-324	7901 35144	4 3/8 111.1	3/4 19.1	3 1/4 82.6	5 3/4 146.1	2 3/4 69.9	1 15/16 49.2	1 1/8 28.6	1 3/16 30.2	1 15/16 49.2	2 19/64 58.3	4 101.6	4 1/2 114.3	2 1/8 54.0	2 1/4 57.2	2 1/8 54.0	11/16 17.5	5.7 2.59
1 11/16 1 3/4	VTWS-327 VTWS-328	VS-327 VS-328	7889 35090	4 17/32 115.1	3/4 19.1	3 3/8 85.7	5 29/32 150.0	2 3/4 69.9	1 15/16 49.2	1 1/8 28.6	1 9/32 32.5	2 1/32 51.6	2 15/32 62.7	4 101.6	4 1/2 114.3	2 1/8 54.0	2 5/16 58.7	2 7/32 56.4	11/16 17.5	6.2 2.81
1 15/16 2	VTWS-331 VTWS-332	VS-331 VS-232	9752 4337	5 3/32 129.4	1 25.4	3 3/4 95.3	6 27/32 173.8	3 5/8 92.1	2 1/2 63.5	1 3/8 34.9	1 5/16 33.3	2 3/16 55.6	2 23/32 69.1	5 1/8 130.2	5 3/4 146.1	2 1/2 63.5	2 9/16 65.1	2 17/32 64.3	1 1/16 27.0	9.5 4.31
2 3/16 2 1/4	VTWS-335 VTWS-336	VS-335 VS-236	11789 52437	5 1/2 139.7	1 25.4	4 101.6	7 1/4 184.2	3 5/8 92.1	2 1/2 63.5	1 3/8 34.9	1 9/16 39.7	2 9/16 65.1	2 63/64 75.8	5 1/8 130.2	5 3/4 146.1	2 1/2 63.5	2 27/32 72.2	2 21/32 67.5	1 1/16 27.0	11.0 4.99

Refer to page G-190 for Frames.

Bore Size	Frame Series
1" to 1 3/16"	23
1 7/16" to 1 3/4"	31
1 15/16" to 2 1/4"	39

Metric dimensions for reference only.

Mounted Ball Bearings

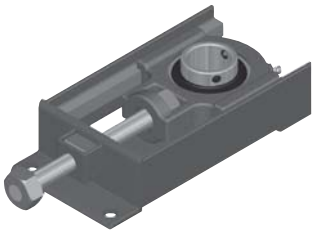

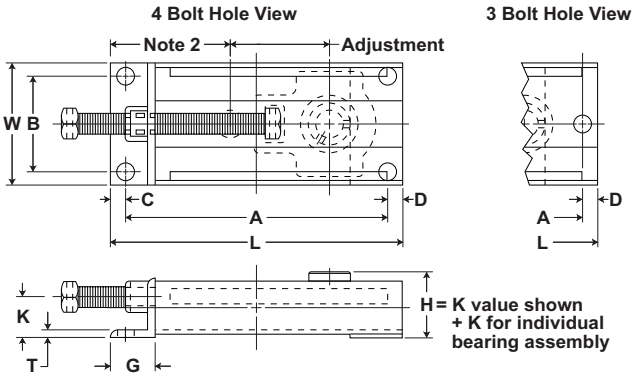

SF Series Standard Duty Center Pull Take-Up Frame

Bore Diameter Range			Frame Part No.	Adjustment	Dimensions inch / mm									Bolt Holes		Unit Wt. lb/kg
100 Series	200 Series	300 Series			L	A	W	B	C	D	G	K	T	No.	Size	
3/4 - 1”	1/2 - 1”	N/A	1SF10	1 1/2 38.1	7 177.8	6 152.4	4 1/16 103.2	3 3/16 81.0	1/2 12.7	1/2 12.7	1 1/2 38.1	1 3/8 34.9	1/4 6.4	3	9/16 14	3.3 1.50
			3SF16	3 76.2	8 1/2 215.9	7 1/2 190.5	4 1/16 103.2	3 3/16 81.0	1/2 12.7	1/2 12.7	1 1/2 38.1	1 3/8 34.9	1/4 6.4	3	9/16 14	3.9 1.77
			6SF16	6 152.4	11 1/2 292.1	10 1/2 266.7	4 1/16 103.2	3 3/16 81.0	1/2 12.7	1/2 12.7	1 1/2 38.1	1 3/8 34.9	1/4 6.4	3	9/16 14	5.1 2.31
			9SF16	9 228.6	14 1/2 368.3	13 1/2 342.9	4 1/16 103.2	3 3/16 81.0	1/2 12.7	1/2 12.7	1 1/2 38.1	1 3/8 34.9	1/4 6.4	3	9/16 14	6.2 2.81
1 1/8 - 1 7/16”	1 1/8 - 1 7/16”	1 -1 3/16“	3SF23	3 76.2	9 3/8 238.1	8 3/8 212.7	4 11/16 119.1	3 11/16 93.7	1/2 12.7	1/2 12.7	1 1/2 38.1	1 3/8 34.9	1/4 6.4	3	9/16 14	5.4 2.45
			6SF23	6 152.4	12 3/8 314.3	11 3/8 288.9	4 11/16 119.1	3 11/16 93.7	1/2 12.7	1/2 12.7	1 1/2 38.1	1 3/8 34.9	1/4 6.4	3	9/16 14	6.7 5.1
			9SF23	9 228.6	15 3/8 390.5	14 3/8 365.1	4 11/16 119.1	3 11/16 93.7	1/2 12.7	1/2 12.7	1 1/2 38.1	1 3/8 34.9	1/4 6.4	3	9/16 14	8.1 3.67
			12SF23	12 304.8	18 3/8 466.7	17 3/8 441.3	4 11/16 119.1	3 11/16 93.7	1/2 12.7	1/2 12.7	1 1/2 38.1	1 3/8 34.9	1/4 6.4	3	9/16 14	9.5 4.31
1 1/2 - 2”	1 1/2 - 2”	1 7/16 - 1 3/4”	3SF31	3 76.2	11 279.4	9 7/8 250.8	5 1/16 128.6	3 1/16 77.8	1/2 12.7	5/8 15.9	1 1/2 38.1	1 5/8 41.3	1/4 6.4	4	9/16 14	7.4 3.36
			6SF31	6 152.4	14 355.6	12 7/8 327.0	5 1/16 128.6	3 1/16 77.8	1/2 12.7	5/8 15.9	1 1/2 38.1	1 5/8 41.3	1/4 6.4	4	9/16 14	9.1 4.13
			9SF31	9 228.6	17 431.8	15 7/8 403.2	5 1/16 128.6	3 1/16 77.8	1/2 12.7	5/8 15.9	1 1/2 38.1	1 5/8 41.3	1/4 6.4	4	9/16 14	10.8 5.1
			12SF31	12 304.8	20 508.0	18 7/8 479.4	5 1/16 128.6	3 1/16 77.8	1/2 12.7	5/8 15.9	1 1/2 38.1	1 5/8 41.3	1/4 6.4	4	9/16 14	12.5 5.67
			18SF31	18 457.2	26 660.4	24 7/8 631.8	5 1/16 128.6	3 1/16 77.8	1/2 12.7	5/8 15.9	1 1/2 38.1	1 5/8 41.3	1/4 6.4	4	9/16 14	15.9 7.21
2 - 2 3/16”	2 - 2 7/16”	1 15/16 - 2 1/4”	9SF39	9 228.6	18 1/4 463.6	16 7/8 428.6	6 3/8 161.9	4 1/8 104.8	5/8 15.9	3/4 19.1	2 50.8	1 7/8 47.6	5/8 15.9	4	11/16 17	20 5.1
			12SF39	12 304.8	21 1/4 539.8	19 7/8 504.8	6 3/8 161.9	4 1/8 104.8	5/8 15.9	3/4 19.1	2 50.8	1 7/8 47.6	5/8 15.9	4	11/16 17	22.8 5.1
			18SF39	18 457.2	27 1/4 692.2	25 7/8 657.2	6 3/8 161.9	4 1/8 104.8	5/8 15.9	3/4 19.1	2 50.8	1 7/8 47.6	5/8 15.9	4	11/16 17	28.2 5.1

Note:
1. Bearing sold separately.
2. Dimension variable based on housing. To calculate use G in table above + D - R from housing tables shown on prior pages.
Metric dimensions for reference only.
Not all parts are available from stock. Please contact customer service for availability (800) 626-2120.
For more information on bearing capabilities outside of our standard offering, please contact Application Engineering (800) 626-2093.

Browning® Mounted Ball Bearings

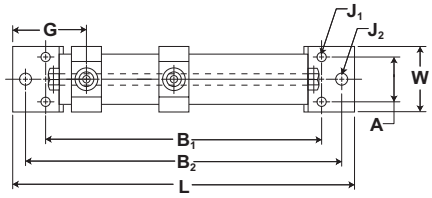

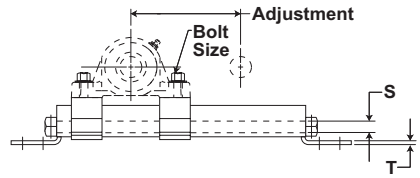

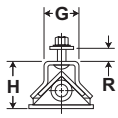

TF and TFS Series Standard Duty Top Mount Take-Up Frame

Bore Diameter Range	Frame Part No.	Adjustment	Dimensions Inch / Mm												Bolt Size	Unit Wt. lb/kg
			L	B1	B2	W	A	G MIN	H	J1	J2	R	S	T		
3/4 - 1”	6TF16	6 152.4	17 1/8 435.0	13 7/8 352.4	15 7/8 403.2	3 1/4 82.6	2 1/4 57.2	3 5/16 84.1	2 3/8 60.3	7/16 11.1	9/16 14.3	9/16 14.3	5/8 15.9	3/16 4.8	3/8 10	6.0 2.72
	9TF16	9 228.6	20 1/8 511.2	16 7/8 428.6	18 7/8 479.4	3 1/4 82.6	2 1/4 57.2	3 5/16 84.1	2 3/8 60.3	7/16 11.1	9/16 14.3	9/16 14.3	5/8 15.9	3/16 4.8	3/8 10	6.7 3.04
1 1/16 - 1 15/16”	6TF31	6 152.4	18 3/16 462.0	15 7/16 392.1	16 15/16 430.2	3 1/2 88.9	2 1/2 63.5	3 3/8 85.7	2 13/16 71.4	7/16 11.1	9/16 14.3	7/8 22.2	3/4 19.1	3/16 4.8	1/2 13	8.9 4.04
	9TF31	9 228.6	22 5/8 574.7	19 7/8 504.8	21 3/8 542.9	3 1/2 88.9	2 1/2 63.5	3 3/8 85.7	2 13/16 71.4	7/16 11.1	9/16 14.3	7/8 22.2	3/4 19.1	3/16 4.8	1/2 13	10.3 4.67
	12TF31	12 304.8	24 3/16 614.4	21 7/16 544.5	22 15/16 582.6	3 1/2 88.9	2 1/2 63.5	3 3/8 85.7	2 13/16 71.4	7/16 11.1	9/16 14.3	7/8 22.2	3/4 19.1	3/16 4.8	1/2 13	10.9 4.94
	18TF31	18 457.2	31 5/8 803.3	28 7/8 733.4	30 3/8 771.5	3 1/2 88.9	2 1/2 63.5	3 3/8 85.7	2 13/16 71.4	7/16 11.1	9/16 14.3	7/8 22.2	3/4 19.1	3/16 4.8	1/2 13	13.3 6.03
2 - 2 7/16”	12TF39	12 304.8	28 711.2	24 3/4 628.7	26 3/4 679.5	4 1/2 114.3	3 76.2	4 101.6	3 5/16 84.1	9/16 14.3	11/16 17.5	15/16 23.8	1 25.4	1/4 6.4	5/8 16	18.3 8.30
	18TF39	18 457.2	34 863.6	30 3/4 781.1	32 3/4 831.9	4 1/2 114.3	3 76.2	4 101.6	3 5/16 84.1	9/16 14.3	11/16 17.5	15/16 23.8	1 25.4	1/4 6.4	5/8 16	21.20 9.62
2 1/4 - 2 7/16”	12TFS39	12 304.8	31 787.4	30 762	-	4 1/2 114.3	3 76.2	3 1/2 88.9	3 76.2	5/8 16	-	-	1 25.4	1/3 8.5	3/4 16	25.66 11.64
	18TFS39	18 457.2	37 939.8	36 914.4	-	4 1/2 114.3	3 76.2	3 1/2 88.9	3 76.2	5/8 16	-	-	1 25.4	1/3 8.5	3/4 16	29.18 13.24

Metric dimensions for reference only.
Not all parts are available from stock. Please contact customer service for availability (800) 626-2120.
For more information on bearing capabilities outside of our standard offering, please contact Application Engineering (800) 626-2093.

Mounted Ball Bearings

Duty: Intermediate
Rolling Elements: Ball
Housing: Ductile Iron Pillow Block
Self Alignment: +/- 1.5 Degrees
Lock: Setscrew
Seal: Contact
Temperature: -20° to 200°F

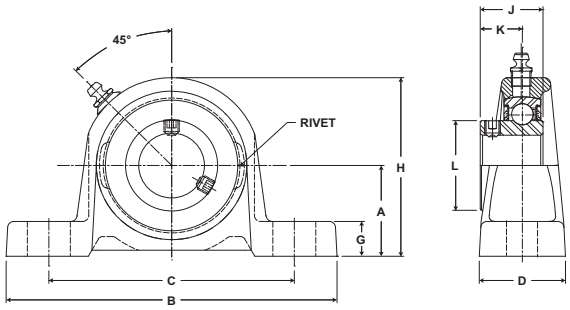

VPS 100-M Series Intermediate Duty Ductile Iron Pillow Blocks - Setscrew Locking

Bore Diameter inch	Part No.	Bearing Insert No.	Basic Dynamic Rating lb/N	Dimensions inch / mm									Bolt Size	Unit Wt. lb/kg
				A	B	C min.	C max.	D	G	H	J	K	L		
1/2 5/8	VPS-108M VPS-110M	VS-108 VS-110	2108 9377	1 3/16 30.2	4 7/16 112.7	3 5/32 80.2	3 23/32 94.5	1 25.4	11/32 8.7	2 5/32 54.8	15/16 23.8	5/8 15.9	31/32 24.6	3/8	.7 .32
3/4	VPS-112M	VS-112	2611 11614	1 5/16 33.3	4 3/4 120.7	3 15/32 88.1	4 1/32 102.4	1 1/16 27.0	3/8 9.5	2 7/16 61.9	1 1/16 27.0	23/32 18.3	1 3/16 30.2	3/8	0.9 .41
15/16 1	VPS-115M VPS-116M	VS-115 VS-116	2801 12459	1 7/16 36.5	5 127.0	3 21/32 92.9	4 7/32 107.2	1 1/8 28.6	13/32 10.3	2 11/16 68.3	1 7/64 28.2	49/64 19.4	1 3/8 34.9	3/8	1.1 .50
1 3/16 1 1/4	VPS-119M VPS-120SM	VS-119 VS-120S	4381 19487	1 11/16 42.9	5 15/16 150.8	4 3/8 111.1	5 1/16 128.6	1 5/16 33.3	13/32 10.3	3 5/32 80.2	1 5/32 29.4	25/32 19.8	1 19/32 40.5	1/2	1.6 .73
1 1/4 1 3/8 1 7/16	VPS-120M VPS-122M VPS-123M	VS-120 VS-122 VS-123	5782 25718	1 7/8 47.6	6 1/4 158.8	4 21/32 118.3	5 11/32 135.7	1 3/8 34.9	7/16 11.1	3 9/16 90.5	1 9/32 32.5	55/64 21.8	1 55/64 47.2	1/2	2.4 1.09

Browning®

Mounted Ball Bearings

Duty: Intermediate
Rolling Elements: Ball
Housing: Ductile Iron Two Bolt Flange
Self Alignment: +/- 1.5 Degrees
Lock: Setscrew
Seal: Contact
Temperature: -20° to 200°F

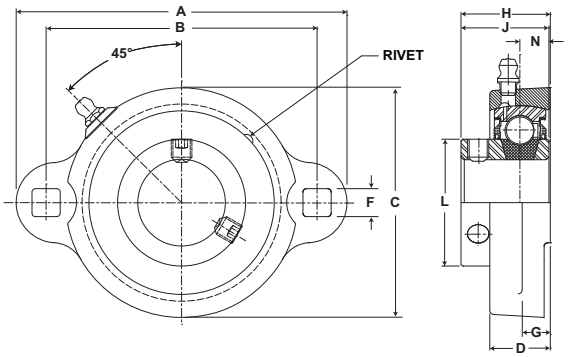

VF2S 100-M Series Intermediate Duty Ductile Iron Two Bolt Flanges - Setscrew Locking

Bore Diameter inch	Part No.	Bearing Insert No.	Basic Dynamic Rating lb/N	Dimensions inch / mm A	B	C	D	F Square	G	H	J	L	N	Bolt Size	Unit Wt. lb/kg
1/2	VF2S-108M	VS-108	2108	3 3/16	2 1/2	1 15/16	5/8	19/64	13/32	31/32	15/16	31/32	5/16	1/4	.6
5/8	VF2S-110M	VS-110	9377	81.0	63.5	49.2	15.9	7.5	10.3	24.6	23.8	24.6	7.9		.27
3/4	VF2S-112M	VS-112	2611 11614	3 9/16 90.5	2 13/16 71.4	2 1/4 57.2	23/32 18.3	23/64 9.1	7/16 11.1	1 7/64 28.2	1 1/16 27.0	1 3/16 30.2	11/32 8.7	5/16	.9 .41
7/8	VF2S-114M	VS-114	2801 12459	3 3/4 95.3	3 76.2	2 1/2 63.5	25/32 19.8	23/64 9.1	7/16 11.1	1 3/16 30.2	1 7/64 28.2	1 3/8 34.9	11/32 8.7	5/16	1.0 .45
15/16	VF2S-115M	VS-115													
1	VF2S-116M	VS-116													
1 1/8	VF2S-118M	VS-118	4381 19487	4 7/16 112.7	3 9/16 90.5	2 15/16 74.6	29/32 23.0	27/64 10.7	15/32 11.9	1 17/64 32.1	1 5/32 29.4	1 19/32 40.5	3/8 9.5	3/8	1.5 .68
1 3/16	VF2S-119M	VS-119													
1 1/4	VF2S-120SM	VS-120S													
1 1/4	VF2S-120M	VS-120	5782 25718	4 13/16 122.2	3 15/16 100.0	3 3/8 85.7	31/32 24.6	27/64 10.7	1/2 12.7	1 25/64 35.3	1 9/32 32.5	1 35/64 39.3	27/64 10.7	3/8	1.9 .86
1 3/8	VF2S-122M	VS-122													
1 7/16	VF2S-123M	VS-123													

Metric dimensions for reference only.
Not all parts are available from stock. Please contact customer service for availability (800) 626-2120.
For more information on bearing capabilities outside of our standard offering, please contact Application Engineering (800) 626-2093.

Mounted Ball Bearings

Duty: Intermediate

Rolling Elements: Ball

Housing: Ductile Iron Three Bolt Flange

Self Alignment: +/- 1.5 Degrees

Lock: Setscrew

Seal: Contact

Temperature: -20° to 200°F

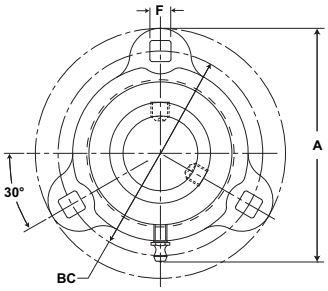

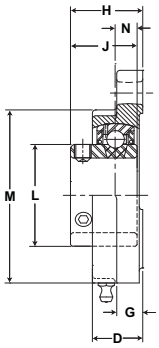

VF3S 100-M Series Intermediate Duty Ductile Iron Three Bolt Flanges - Setscrew Locking

Bore Diameter inch	Part No.	Bearing Insert No.	Basic Dynamic Rating lb/N	Dimensions inch / mm										Bolt Size	Unit Wt. lb/kg
				A	BC	D	F Square	G	H	J	L	M	N		
1/2	VF3S-108M	VS-108	2108	3 3/16 81.0	2 1/2 63.5	5/8 15.9	19/64 7.5	13/32 10.3	31/32 24.6	15/16 23.8	31/32 24.6	1 15/16 49.2	5/16 7.9	1/4	.60 .27
5/8	VF3S-110M	VS-110	9377												
3/4	VF3S-112M	VS-112	2611 11614	3 9/16 90.5	2 13/16 71.4	23/32 18.3	23/64 9.1	7/16 11.1	1 7/64 28.2	1 1/16 27.0	1 3/16 30.2	2 1/4 57.2	11/32 8.7	5/16	.81 .37
7/8	VF3S-114M	VS-114	2801 12459	3 3/4 95.3	3 76.2	25/32 19.8	23/64 9.1	7/16 11.1	1 3/16 30.2	1 7/64 28.2	1 3/8 34.9	2 1/2 63.5	11/32 8.7	5/16	1.05 .48
15/16	VF3S-115M	VS-115													
1	VF3S-116M	VS-116													
1 1/8	VF3S-118M	VS-118	4381 19487	4 7/16 112.7	3 9/16 90.5	29/32 23.0	27/64 10.7	15/32 11.9	1 17/64 32.1	1 5/32 29.4	1 19/32 40.5	2 15/16 74.6	3/8 9.5	3/8	1.50 .68
1 3/16	VF3S-119M	VS-119													
1 1/4	VF3S-120SM	VS-120S													
1 1/4	VF3S-120M	VS-120	5782 25718	4 13/16 122.2	3 15/16 100.0	31/32 24.6	27/64 10.7	1/2 12.7	1 25/64 35.3	1 9/32 32.5	1 55/64 47.2	3 3/8 85.7	27/64 10.7	3/8	2.00 .91
1 3/8	VF3S-122M	VS-122													
1 7/16	VF3S-123M	VS-123													

Browning® Mounted Ball Bearings

Duty: Light
Rolling Elements: Ball
Housing: Stamped Steel Pillow Block
Self Alignment: +/- 1.5 Degrees
Lock: Setscrew
Seal: Contact
Temperature: -20° to 200°F
Relube: No

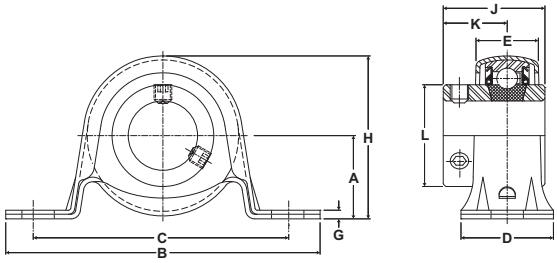

SSPS 100 Series Light Duty Stamped Steel Pillow Blocks - Setscrew Locking

Bore Diameter inch	Max Radial Load lb/N	Part No.	Bearing Insert No.	Dimensions inch / mm A	B	C	D	E	G	H	J	K	L	Bolt Size	Unit Wt. lb/kg
7/8	400 1779	SSPS-114	LRS-114	1 1/8 28.6	4 1/4 108.0	3 3/8 85.7	1 1/4 31.8	27/32 21.4	1/8 3.2	2 13/64 56.0	1 3/8 34.9	7/8 22.2	1 3/8 34.9	3/8	.6 .27
15/16		SSPS-115	LRS-115												
1		SSPS-116	LRS-116												
1 1/8	600 2669	SSPS-118	LRS-118	1 5/16 33.3	4 5/8 117.5	3 3/4 95.3	1 3/8 34.9	61/64 24.2	5/32 4.0	2 19/32 65.9	1 19/32 40.5	7/8 22.2	1 19/32 40.5	3/8	1.0 .45
1 3/16		SSPS-119	LRS-119												
1 1/4		SSPS-120S	LRS-120S												

Metric dimensions for reference only.
Not all parts are available from stock. Please contact customer service for availability (800) 626-2120.
For more information on bearing capabilities outside of our standard offering, please contact Application Engineering (800) 626-2093.

Mounted Ball Bearings

Duty: Light
Rolling Elements: Ball
Housing: Stamped Steel with Rubber Grommet Pillow Block
Self Alignment: +/- 1.5 Degrees
Lock: Setscrew
Seal: Contact
Temperature: -20° to 200°F
Relube: No

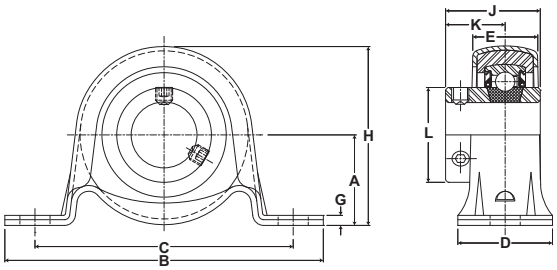

SSRPS 100 Series Light Duty Stamped Steel with Rubber Grommet Pillow Blocks - Setscrew Locking

Bore Diameter inch	Max Radial Load lb/N	Part No.	Bearing Insert No.	Dimensions inch / mm										Bolt Size	Unit Wt. lb/kg
				A	B	C	D	E	G	H	J	K	L		
3/4	250 1112	SSRPS-112	LRS-112	1 1/8 28.6	4 1/4 108.0	3 3/8 85.7	1 1/4 31.8	27/32 21.4	1/8 3.2	2 13/64 56.0	1 7/32 31.0	13/16 20.6	1 3/16 30.2	3/8	0.6 .27
7/8 15/16 1	300 1334	SSRPS-114 SSRPS-115 SSRPS-116	LRS-114 LRS-115 LRS-116	1 5/16 33.3	4 5/8 117.5	3 3/4 95.3	1 3/8 34.9	61/64 24.2	5/32 4.0	2 19/32 65.9	1 3/8 34.9	55/64 21.8	1 3/8 34.9	3/8	0.8 .36

Browning® Mounted Ball Bearings

Duty: Light

Rolling Elements: Ball

Housing: Stamped Steel Four Bolt Flange

Self Alignment: +/- 1.5 Degrees

Lock: Setscrew

Seal: Contact

Temperature: -20° to 200°F

Relube: No

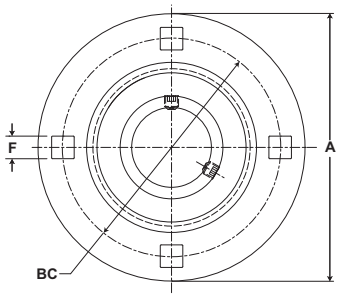

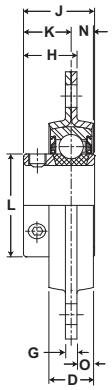

SSF4S 100 Series Light Duty Stamped Steel Four Bolt Flanges - Setscrew Locking

Bore Diameter inch	Max Radial Load lb/N	Part No.	Bearing Insert No.	Dimensions inch / mm										Bolt Size	Unit Wt. lb/kg
				A	BC	F Square	G	H	J	L	M	N	O		
1 1/2	1700 7562	SSF4S-124	LS-124	5 13/16 147.6	4 11/16 119.1	17/32 13.5	17/64 6.7	1 5/64 27.4	1 27/64 36.1	2 1/16 52.4	3 7/16 87.3	31/64 12.3	11/32 8.7	1/2	3.5 1.59
1 11/16 1 3/4	1700 7562	SSF4S-127 SSF4S-128	LS-127 LS-128	5 7/8 149.2	4 3/4 120.7	17/32 13.5	17/64 6.7	1 3/32 27.8	1 7/16 36.5	2 19/64 58.3	3 5/8 92.1	31/64 12.3	11/32 8.7	1/2	3.9 1.77
1 15/16	1900 8451	SSF4S-131	LS-131	6 1/8 155.6	5 127.0	17/32 13.5	19/64 7.5	1 3/16 30.2	1 35/64 39.3	2 15/32 62.7	3 27/32 97.6	1/2 12.7	23/64 9.1	1/2	4.0 1.81

Metric dimensions for reference only.
Not all parts are available from stock. Please contact customer service for availability (800) 626-2120.
For more information on bearing capabilities outside of our standard offering, please contact Application Engineering (800) 626-2093.

Duty: Light

Rolling Elements: Ball

Housing: Stamped Steel Three Bolt Flange

Self Alignment: +/- 1.5 Degrees

Lock: Setscrew

Seal: Contact

Temperature: -20° to 200°F

Relube: No

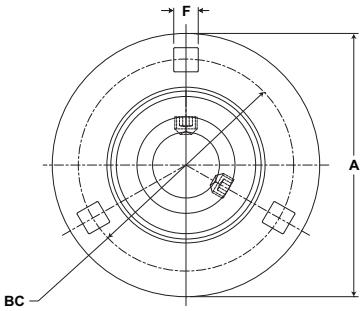

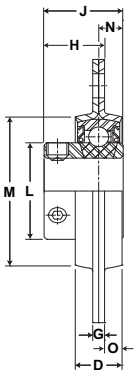

SSF3S 100 Series Light Duty Stamped Steel Three Bolt Flanges - Setscrew Locking

Bore Diameter inch	Steady Radial Load lb/N	Part No.	Bearing Insert No.	Dimensions inch / mm											Bolt Size	Unit Wt. lb/kg
				A	BC	D	F Square	G	H	J	L	M	N	O		
3/4	700 3114	SSF3S-112	LS-112	3 9/16 90.5	2 13/16 71.4	43/64 17.1	11/37 8.7	11/64 4.4	13/16 20.6	1 1/16 27.0	1 3/16 30.2	2 1/64 51.2	11/32 8.7	1/4 6.4	5/16	1.0 .45
7/8 15/16 1	800 3558	SSF3S-114 SSF3S-115 SSF3S-116	LS-114 LS-115 LS-116	3 3/4 95.3	3 76.2	43/64 17.1	11/32 8.7	11/64 4.4	55/64 21.8	1 7/64 28.2	1 3/8 34.9	2 7/32 56.4	11/32 8.7	1/4 6.4	5/16	1.3 .59
1 1/8 1 3/16 1 1/4	1100 4893	SSF3S-118 SSF3S-119 SSF3S-120S	LS-118 LS-119 LS-120S	4 7/16 112.7	3 9/16 90.5	17/23 18.8	13/32 10.3	13/64 5.1	57/64 22.6	1 5/32 29.4	1 19/32 40.5	2 21/32 67.5	3/8 9.5	17/64 6.7	3/8	1.5 .68
1 1/4 1 3/8 1 7/16	1400 6227	SSF3S-120 SSF3S-122 SSF3S-123	LS-120 LS-122 LS-123	4 13/16 122.2	3 15/16 100.0	53/64 21.0	13/32 10.3	13/64 5.1	31/32 24.6	1 9/32 32.5	1 55/64 47.2	3 1/16 77.8	27/64 10.7	5/16 7.9	3/8	1.8 .82

Browning®

Mounted Ball Bearings

Duty: Light

Rolling Elements: Ball

Housing: Stamped Steel Three Bolt Triangular Flange

Self Alignment: +/- 1.5 Degrees

Lock: Setscrew

Seal: Contact

Temperature: -20° to 200°F

Relube: No

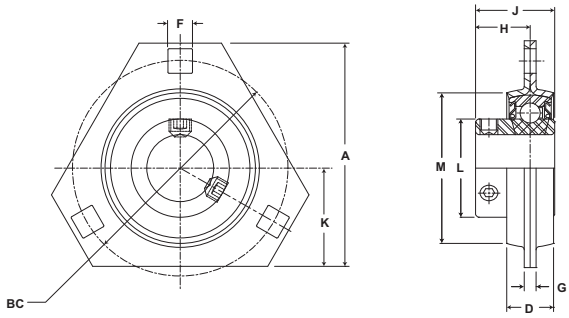

SSF3TS 100 Series Light Duty Stamped Steel Three Bolt Flanges - Setscrew Locking

Bore Diameter inch	Max Radial Load lb/N	Part No.	Bearing Insert No.	Dimensions inch / mm A	BC	D	F Square	G	J	H	K	L	M	Bolt Size	Unit Wt. lb/kg
3/4	700 3114	SSF3TS-112	LS-112	3 76.2	2 13/16 71.4	21/32 16.7	11/32 8.7	11/64 4.2	1 1/16 27.0	23/32 18.3	1 5/16 33.3	1 3/16 30.2	2 1/64 51.2	5/16	1.0 .45
7/8 15/16 1	800 3558	SSF3TS-114 SSF3TS-115 SSF3TS-116	LS-114 LS-115 LS-116	3 1/8 79.4	3 76.2	21/32 16.7	11/32 8.7	11/64 4.2	1 7/64 28.2	49/64 19.4	1 3/8 34.9	1 3/8 34.9	2 7/32 56.4	5/16	1.1 .50
1 1/8 1 3/16 1 1/4	1100 4893	SSF3TS-118 SSF3TS-119 SSF3TS-120S	LS-118 LS-119 LS-120S	3 11/16 93.7	3 9/16 90.5	3/4 19.1	11/32 8.7	13/64 5.2	1 5/32 29.4	25/32 19.8	1 1/2 38.1	1 19/32 40.5	2 21/32 67.5	3/8	1.3 .59

Metric dimensions for reference only.
Not all parts are available from stock. Please contact customer service for availability (800) 626-2120.
For more information on bearing capabilities outside of our standard offering, please contact Application Engineering (800) 626-2093.

Mounted Ball Bearings

Duty: Light
Rolling Elements: Ball
Housing: Stamped Steel Two Bolt Flange
Self Alignment: +/- 1.5 Degrees
Lock: Setscrew
Seal: Contact
Temperature: -20° to 200°F
Relube: No

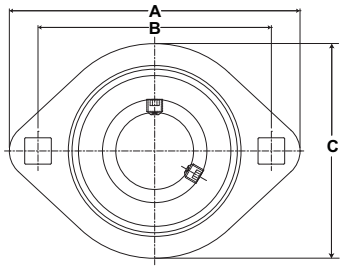

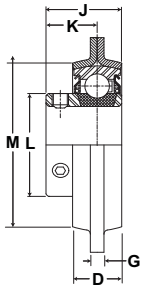

SSF2S 100 Series Light Duty Stamped Steel Two Bolt Flanges - Setscrew Locking

Bore Diameter inch	Max Radial Load lb/N	Part No.	Bearing Insert No.	Dimensions inch / mm A	B	C	D	G	J	L	K	M	Bolt Size	Unit Wt. lb/kg
1/2 5/8	600 2669	SSF2S-108 SSF2S-110	LS-108 LS-110	3 3/16 81.0	2 1/2 63.5	2 1/4 57.2	9/16 14.3	5/32 4.0	15/16 23.8	31/32 24.6	5/8 15.9	1 47/64 44.1	1/4	.6 .27
3/4	600 2669	SSF2S-112	LS-112	3 9/16 90.5	2 13/16 71.4	2 5/8 66.7	21/32 16.7	11/64 4.3	1 1/16 27.0	1 3/16 30.2	23/32 18.3	2 1/64 51.2	5/16	.8 .36
7/8 15/16 1	800 3558	SSF2S-114 SSF2S-115 SSF2S-116	LS-114 LS-115 LS-116	3 3/4 95.3	3 76.2	2 13/16 71.4	21/32 71.4	11/64 4.3	1 7/64 28.2	1 3/8 34.9	49/64 19.4	2 7/32 56.4	5/16	.9 .41
1 1/8 1 3/16 1 1/4	1100 4893	SSF2S-118 SSF2S-119 SSF2S-120S	LS-118 LS-119 LS-120S	4 7/16 112.7	3 9/16 90.5	3 5/16 84.1	3/4 19.1	13/64 5.2	1 5/32 29.4	1 19/32 40.5	25/32 19.8	2 21/32 67.5	3/8	1.0 .45

Browning® Mounted Ball Bearings

Duty: Light
Rolling Elements: Ball
Housing: Cylindrical O.D. Rubber Grommet
Lock: Setscrew
Seal: Contact
Temperature: -20° to 200°F
Relube: No

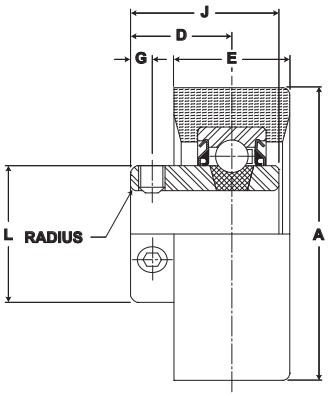

RUBRS 100 Series Light Duty Rubber Grommets - Setscrew Locking

Bore Diameter inch	Steady Radial Load lb/N	Part No.	Bearing Insert No.	Dimensions inch / mm A	D	E	G	J	L	Unit Wt. lb/kg
1/2	250 1112	RUBRS-108	SLRS-108	2 17/32 64.3	7/8 22.2	1 25.4	3/16 4.8	1 9/32 32.5	1 3/16 30.2	.5 .23
5/8		RUBRS-110	SLRS-110							
3/4		RUBRS-112	SLRS-112							
15/16	300	RUBRS-115	SLRS-115	2 17/32 64.3	7/8 22.2	1 25.4	3/16 4.8	1 3/8 34.9	1 3/8 34.9	.6 .27
1	1334	RUBRS-116	SLRS-116							

Metric dimensions for reference only.
Not all parts are available from stock. Please contact customer service for availability (800) 626-2120.
For more information on bearing capabilities outside of our standard offering, please contact Application Engineering (800) 626-2093.

Duty: Light
Rolling Elements: Ball
Housing: Cylindrical O.D. Rubber Grommet
Lock: BOA Concentric
Seal: Contact
Temperature: -20° to 200°F
Relube: No

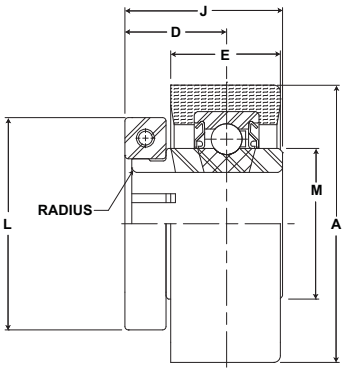

RUBRB 100 Series Light Duty Rubber Grommets - BOA Concentric Locking

Bore Diameter inch	Steady Radial Load lb/N	Part No.	Bearing Insert No.	Dimensions inch / mm A	D	E	J	L	M	Torx Cap Screw	Unit Wt. lb/kg	Collar No.
5/8	250 1112	RUBRB-112	SLRB-112	2 17/32 64.3	7/8 22.2	1 25.4	11/32 99.1	1 3/4 44.5	1 3/16 30.2	T-25	.5 .23	B-12B
1	300 1334	RUBRB-116	SLRB-116	2 17/32 64.3	15/16 23.8	1 25.4	1 7/16 36.5	1 15/16 49.2	1 3/8 34.9	T-25	.6 .27	B-15A

RUBRB 100 Series Light Duty Rubber Grommets - BOA Concentric Locking - Metric

Bore Diameter mm	Part No.	Bearing Insert No.	Dimensions inch / mm A	D	E	J	L	M	Torx Cap Screw	Unit Wt. lb/kg	Collar No.
20	VPB-20MM	SLRB-20MM	2 17/32 64.3	7/8 22.2	1 25.4	11/32 99.1	1 3/4 44.5	1 3/16 30.2	T-25	.5 .23	2-012B
25	VPB-25MM	SLRB-25MM	2 17/32 64.3	15/16 23.8	1 25.4	1 7/16 36.5	1 15/16 49.2	1 3/8 34.9	T-25	.6 .27	B-15A
30	RUBRB-30MM	SLRB-30MM	3 3/32 78.6	1 25.4	1 7/32 30.7	1 19/32 40.6	2 3/16 55.6	1 19/32 40.4	T-25	1.3 .59	B-19B

Duty: Light
Rolling Elements: Ball
Housing: Cylindrical O.D. Rubber Grommet
Lock: Eccentric
Seal: Contact
Temperature: -20° to 200°F
Relube: No

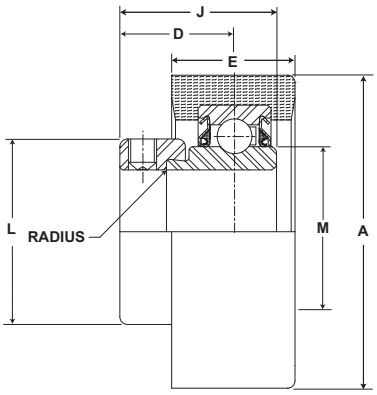

RUBRE 100 Series Light Duty Rubber Grommets - Eccentric Locking

Bore Diameter inch	Steady Radial Load lb/N	Part No.	Bearing Insert No.	Dimensions inch / mm A	D	E	J	L	M	Setscrew Tap	Unit Wt. lb/kg
3/4	250 1112	RUBRE-112	SLE-112	2 17/32 64.3	59/64 23.4	1 25.4	1 17/64 32.1	1 5/16 .60	1 3/16 .54	1/4-28	.5 .23
15/16 1	300 1334	RUBRE-115 RUBRE-116	SLE-115 SLE-116	2 17/32 64.3	59/64 23.4	1 25.4	1 17/64 32.1	1 1/2 .68	1 3/8 .62	1/4-28	.6 .27

For Replacement Lock Collar see page G-214.

Browning® Mounted Ball Bearings

Duty: Light
Rolling Elements: Ball
Outer: Cylindrical O.D.
Self Alignment: +/- 1.5 Degrees
Lock: Setscrew
Seal: Contact
Temperature: -20° to 200°F
Relube: No

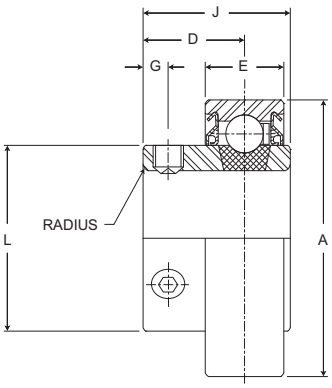

SLS 100 Series Light Duty Straight OD Inserts - Setscrew Locking

Bore Diameter inch	Part No.	Basic Dynamic Rating lb/N	Dimensions inch / mm A	D	E	G	J	L	Max. Rad. To Clear	Setscrew Thread	Unit Wt. lb/kg
1/2 5/8	SLS-108 SLS-110	2108 9377	1.5748 40	5/8 15.9	33/64 13.1	5/32 4.0	15/16 23.8	31/32 24.6	.055 1.4	10-32	.4 .18
3/4	SLS-112	2611 11614	1.8504 47	23/32 18.3	19/32 15.1	3/16 4.8	1 1/16 27.0	1 3/16 30.2	0.07 1.8	1/4-28	.5 .23
7/8 15/16 1	SLS-114 SLS-115 SLS-116	2801 12459	2.042 52	49/64 19.4	19/32 15.1	3/16 4.8	1 7/64 28.2	1 3/8 34.9	0.07 1.8	1/4-28	.6 .27
1 1/8 1 3/16 1 1/4	SLS-118 SLS-119 SLS-120S	4381 19487	2.4409 62	25/32 19.8	45/64 17.9	7/32 5.6	1 5/32 29.4	1 19/32 40.5	0.08 2.0	1/4-28	1.0 .45
1 1/4 1 3/8 1 7/16	SLS-120 SLS-122 SLS-123	5782 25718	2.8346 72	55/64 21.8	3/4 19.1	1/4 6.4	1 9/32 32.5	1 55/64 47.2	0.08 2.0	5/16-24	1.6 .73
1 1/2	SLS-124	7340 32648	3.1496 80	15/16 23.8	55/64 21.8	9/32 7.1	1 27/64 36.1	2 1/16 52.4	0.095 2.4	5/16-24	1.8 .82

Outside diameter may be oversized due to seal press fit.
Metric dimensions for reference only.
Not all parts are available from stock. Please contact customer service for availability (800) 626-2120.
For more information on bearing capabilities outside of our standard offering, please contact Application Engineering (800) 626-2093.

Mounted Ball Bearings

Duty: Light
Rolling Elements: Ball
Outer: Spherical O.D.
Lock: Setscrew
Seal: Contact
Temperature: -20° to 200°F
Relube: No

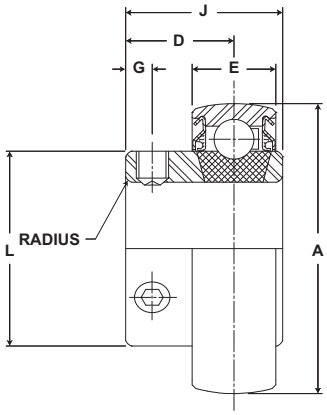

LS 100 Series Light Duty Inserts - Setscrew Locking

Bore Diameter inch	Part No.	Basic Dynamic Rating lb/N	Dimensions inch / mm A	D	E	G	J	L	Max. Rad. To Clear	Setscrew Thread	Unit Wt. lb/kg
1/2 5/8	LS-108 LS-110	2108 9377	1.5748 40	5/8 15.9	33/64 13.1	5/32 4.0	15/16 23.8	31/32 24.6	.055 1.4	10-32	.4 .18
3/4	LS-112	2611 11614	1.8504 47	23/32 18.3	19/32 15.1	3/16 4.8	1 1/16 27.0	1 3/16 30.2	.070 1.8	1/4-28	.5 .23
7/8 15/16 1	LS-114 LS-115 LS-116	2801 12459	2.0472 52	49/64 19.4	19/32 15.1	3/16 4.8	1 7/64 28.2	1 3/8 34.9	.070 1.8	1/4-28	.6 .27
1 1/8 1 3/16 1 1/4	LS-118 LS-119 LS-120S	4381 19487	2.4409 62	25/32 19.8	45/64 17.9	7/32 5.6	1 5/32 29.4	1 19/32 40.5	.080 2.0	1/4-28	1.0 .45
1 1/4 1 3/8 1 7/16	LS-120 LS-122 LS-123	5782 25718	2.8346 72	55/64 21.8	3/4 19.1	1/4 6.4	1 9/32 32.5	1 55/64 47.2	.080 2.0	5/16-24	1.6 .73
1 1/2	LS-124	7340 32648	3.1496 80	15/16 23.8	55/64 21.8	9/32 7.1	1 27/64 36.1	2 1/16 52.4	.095 2.4	5/16-24	1.8 .82
1 11/16 1 3/4	LS-127 LS-128	7901 35144	3.3465 85	61/64 24.2	55/64 21.8	5/16 7.9	1 7/16 36.5	2 19/64 58.3	.110 2.8	5-16-24	1.4 .64
1 15/16	LS-131	7889 35090	3.5433 90	1 3/64 26.6	29/32 23.0	3/8 9.5	1 35/64 39.3	2 15/32 62.7	.110 2.8	3/8-24	1.6 .73

Browning®

Mounted Ball Bearings

Duty: Light
Rolling Elements: Ball
Outer: Spherical O.D.
Lock: Setscrew
Seal: Contact
Temperature: -20° to 200°F
Relube: No

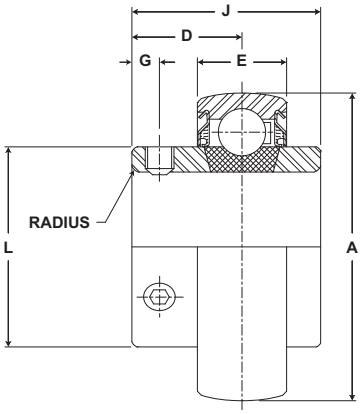

LRS 100 Series Light Duty Inserts - Setscrew Locking

Bore Diameter inch	Part No.	Basic Dynamic Rating lb/N	Dimensions In Inches A	D	E	G	J	L	Max. Rad. To Clear	Setscrew Thread	Unit Wt. lb/kg
3/4	LRS-112	2611 11614	47MM 1.8504	13/16 20.6	19/32 15.1	3/16 4.8	1 7/32 31.0	1 3/16 30.2	.04 1.0	1/4-28	.4 .18
7/8 15/16 1	LRS-114 LRS-115 LRS-116	2801 12459	52MM 2.0472	55/64 21.8	19/32 15.1	7/32 5.6	1 3/8 34.9	1 3/8 34.9	.04 1.0	1/4-28	.5 .23
1 1/8 1 3/16 1 1/4	LRS-118 LRS-119 LRS-120S	4381 19487	62MM 2.4409	7/8 22.2	45/64 17.9	7/32 5.6	1 1/2 38.1	1 19/32 40.5	.04 1.0	1/4-28	.9 .41

Metric dimensions for reference only.
Not all parts are available from stock. Please contact customer service for availability (800) 626-2120.
For more information on bearing capabilities outside of our standard offering, please contact Application Engineering (800) 626-2093.

Mounted Ball Bearings

Duty: Intermediate
Rolling Elements: Ball
Outer: Spherical O.D.
Lock: Setscrew
Seal: Contact
Temperature: -20° to 200°F

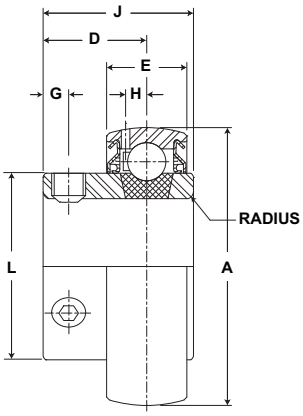

VS 100 Series Intermediate Duty Inserts - Setscrew Locking

Bore Diameter inch	Part No.	Basic Dynamic Rating lb/N	Dimensions In Inches A	D	E	G	H	J	L	Max. Rad. To Clear	Setscrew Thread	Unit Wt. lb/kg
1/2 5/8	VS-108 VS-110	2108 9377	1.5748 40	5/8 15.9	.512 13	5/32 4.0	9/64 3.6	15/16 23.8	31/32 24.6	.055 1.4	10-32	.3 .14
3/4	VS-112	2611 11614	1.8504 47	23/32 18.3	.591 15	3/16 4.8	5/32 4.0	1 1/16 27.0	1 3/16 30.2	.070 1.8	1/4-28	.4 .18
7/8 15/16 1	VS-114 VS-115 VS-116	2801 12459	2.0472 52	49/64 19.4	.591 15	3/16 4.8	5/32 4.0	1 7/64 28.2	1 3/8 34.9	.070 1.8	1/4-28	.5 .23
1 1/8 1 3/16 1 1/4	VS-118 VS-119 VS-120S	4381 19487	2.4409 62	25/32 19.8	.709 18	7/32 5.6	13/64 5.2	1 5/32 29.4	1 19/32 40.5	.080 2.0	1/4-28	.7 .32
1 1/4 1 3/8 1 7/16	VS-120 VS-122 VS-123	5782 25718	2.8346 72	55/64 21.8	.748 19	1/4 6.4	15/64 6.0	1 9/32 32.5	1 55/64 47.2	.080 2.0	5/16-24	1.0 .45
1 1/2	VS-124	7340 32648	3.1496 80	15/16 23.8	.866 22	9/32 7.1	17/64 6.7	1 27/64 36.1	2 1/16 52.4	.095 2.4	5/16-24	1.2 .54
1 11/16 1 3/4	VS-127 VS-128	7901 35144	3.3465 85	61/64 24.2	.866 22	5/16 7.9	17/64 6.7	1 7/16 36.5	2 19/64 58.3	.110 2.8	5/16-24	1.4 .64
1 15/16 2	VS-131 VS-132S	7889 35090	3.5433 90	1 3/64 26.6	.906 23	3/8 9.5	9/32 7.1	1 35/64 39.3	2 15/32 62.7	.110 2.8	3/8-24	1.6 .73
2 2 3/16	VS-132 VS-135	9752 43377	3.9370 100	1 7/64 28.2	.984 25	3/8 9.5	5/16 7.9	1 21/32 42.1	2 23/32 69.1	.125 3.2	3/8-24	2.2 1.00

Browning®

Mounted Ball Bearings

Duty: Intermediate
Rolling Elements: Ball
Outer: Spherical O.D.
Lock: Eccentric
Seal: Contact
Temperature: -20° to 200°F

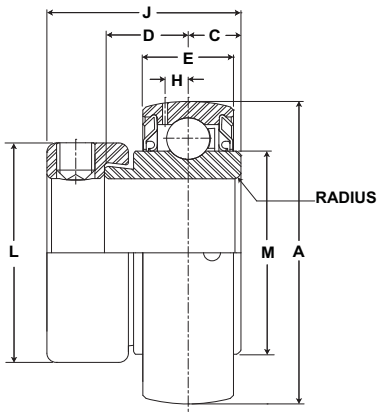

VE 100 Series Intermediate Duty Inserts - Eccentric Locking

Bore Diameter inch	Part No.	Basic Dynamic Rating lb/N	Dimensions inch / mm A	C	D	E	H	J	L	M	Max. Rad. To Clear	Setscrew Thread	Unit Wt. lb/kg
1/2 5/8	VE-108 VE-110	2108 9377	1.5748 40	5/16 7.9	1/2 12.7	.512 13	9/64 3.6	1 3/16 30.2	1 3/16 30.2	31/32 24.6	.055 1.4	1/4-28	.4 .18
3/4	VE-112	2611 11614	1.8504 47	11/32 8.7	35/64 13.9	.591 15	5/32 4.0	1 17/64 32.1	1 5/16 33.3	1 3/16 30.2	.070 1.8	1/4-28	.4 .18
7/8 15/16 1	VE-114 VE-115 VE-116	2801 12459	2.0472 52	11/32 8.7	35/64 13.9	.591 15	5/32 4.0	1 17/64 32.1	1 1/2 38.1	1 3/8 34.9	.070 1.8	1/4-28	.5 .23
1 1/8 1 3/16 1 1/4	VE-118 VE-119 VE-120S	4381 19487	2.4409 62	3/8 9.5	37/64 14.7	.709 18	13/64 5.2	1 27/64 36.1	1 3/4 44.5	1 19/32 40.5	.080 2.0	5/16-24	.7 .32
1 1/4 1 3/8 1 7/16	VE-120 VE-122 VE-123	5782 25718	2.8346 72	27/64 10.7	5/8 15.9	.748 19	15/64 6.0	1 37/64 40.1	2 3/16 55.6	1 55/64 47.2	.080 2.0	3/8-24	1.1 .50
1 1/2	VE-124	7340 32648	3.1496 80	31/64 12.3	3/4 19.1	.866 22	17/64 6.7	1 49/64 44.8	2 3/8 60.3	2 1/16 52.4	.095 2.4	3/8-24	1.4 .64
1 11/16 1 3/4	VE-127 VE-128	7901 35144	3.3465 85	31/64 12.3	3/4 19.1	.866 22	17/64 6.7	1 49/64 44.8	2 1/2 63.5	2 19/64 58.3	.110 2.8	3/8-24	1.6 .73
1 15/16 2	VE-131 VE-132S	7889 35090	3.5433 90	1/2 12.7	3/4 19.1	.906 23	9/32 7.1	1 25/32 45.2	2 3/4 69.9	2 15/32 62.7	.110 2.8	3/8-24	1.8 .82
2 2 3/16	VE-132 VE-135	9752 43377	3.937 100	35/64 13.9	13/16 20.6	.984 25	5/16 7.9	1 63/64 50.4	3 76.2	2 23/32 69.1	.125 3.2	7/16-20	2.5 1.13

Replacement collar part numbers can be found on page G-214.

Metric dimensions for reference only.
Not all parts are available from stock. Please contact customer service for availability (800) 626-2120.
For more information on bearing capabilities outside of our standard offering, please contact Application Engineering (800) 626-2093.

Mounted Ball Bearings

Duty: Standard
Rolling Elements: Ball
Outer: Spherical O.D.
Lock: Setscrew
Seal: Contact and Flinger
Temperature: -20° to 200°F

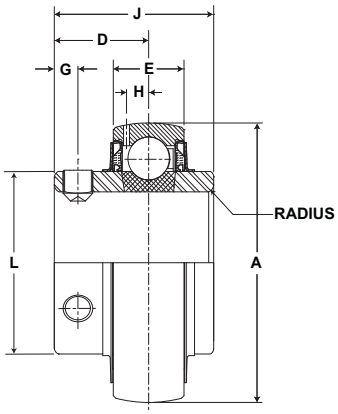

VS 200 Series Standard Duty Inserts - Setscrew Locking - Inch

Bore Diameter inch	Part No.	Basic Dynamic Rating lb/N	Dimensions inch / mm A	D	E	G	H	J	L	Max. Rad. To Clear	Setscrew Thread	Unit Wt. lb/kg
1/2 5/8	VS-208 VS-210	2108 9377	1.5748 40	5/8 15.9	.512 13	5/32 4.0	9/64 3.6	1 1/32 26.2	31/32 24.6	.040 1.0	10-32	.4 .18
3/4	VS-212	2611 11614	1.8504 47	23/32 18.3	.591 15	3/16 4.8	5/32 4.0	1 7/32 31.0	1 3/16 30.2	.040 1.0	1/4-28	.4 .18
7/8 15/16 1	VS-214 VS-215 VS-216	2801 12459	2.0472 52	13/16 20.6	.591 15	7/32 5.6	5/32 4.0	1 3/8 34.9	1 3/8 34.9	.040 1.0	1/4-28	.6 .27
1 1/8 1 3/16 1 1/4	VS-218 VS-219 VS-220S	4381 19487	2.4409 62	7/8 22.2	39/55 18	7/32 5.6	13/64 5.2	1 1/2 38.1	1 19/32 40.5	.040 1.0	1/4-28	.9 .41
1 1/4 1 3/8 1 7/16	VS-220 VS-222 VS-223	5782 25718	2.8346 72	1 25.4	.748 19	1/4 6.4	15/64 6.0	1 11/16 42.9	1 55/64 47.2	.040 1.0	5/16-24	1.2 .54
1 1/2	VS-224	7340 32648	3.1496 80	1 3/16 30.2	.866 22	5/16 7.9	17/64 6.7	1 15/16 49.2	2 1/16 52.4	.062 1.6	5/16-24	1.5 .68
1 5/8 1 11/16 1 3/4	VS-226 VS-227 VS-228	7901 35144	3.3465 85	1 3/16 30.2	.866 22	5/16 7.9	17/64 6.7	1 15/16 49.2	2 19/64 58.3	.062 1.6	5/16-24	1.6 .73
1 15/16 2	VS-231 VS-232S	7889 35090	3.5433 90	1 9/32 32.5	.906 23	3/8 9.5	9/32 7.1	2 1/32 51.6	2 15/32 62.7	.062 1.6	3/8-24	1.8 .82
2 2 3/16	VS-232 VS-235	9752 43377	3.9370 100	1 5/16 33.3	.984 25	3/8 9.5	5/16 7.9	2 3/16 55.6	2 23/32 69.1	.080 2.0	3/8-24	2.3 1.04
2 1/4 2 7/16	VS-236 VS-239	11789 52437	4.3307 110	1 9/16 39.7	1.063 27	7/16 11.1	11/32 8.7	2 9/16 65.1	2 63/64 75.8	.080 2.0	3/8-24	3.1 1.41

Browning® Mounted Ball Bearings

Duty: Standard
Rolling Elements: Ball
Outer: Spherical O.D.
Lock: Setscrew
Seal: Contact and Flinger
Temperature: -20° to 200°F

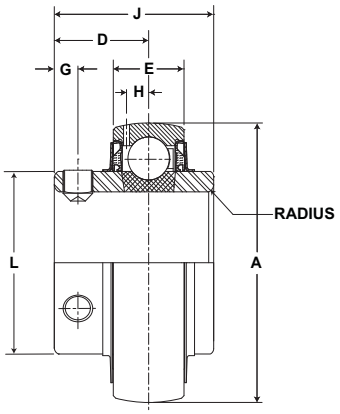

VS 200 Series Standard Duty Inserts - Setscrew Locking - Metric

Bore Diameter mm	Part No.	Basic Dynamic Rating N/lb	Dimensions mm / inch							Max. Rad. To Clear	Setscrew Thread	Unit Wt. kg/lb
			A	D	E	G	H	J	L			
20	VS-20MM	11614 2611	47.000 1.8504	18.3 23/32	15.0 .591	4.8 3/16	4.0 5/32	31.0 1 7/32	30.2 1 3/16	1.0 .040	M6	.18 .4
25	VS-25MM	12459 2801	52.000 2.0472	20.6 13/16	15.0 .591	5.6 7/32	4.0 5/32	34.9 1 3/8	34.9 1 3/8	1.0 .040	M6	.27 .6
30	VS-30MM	19487 4381	62.000 2.4409	22.2 7/8	18.0 .709	5.6 7/32	5.2 13/64	38.1 1 1/2	40.5 1 19/32	1.0 .040	M6	.41 .9
35	VS-35MM	25718 5782	72.000 2.8346	25.4 1	19.0 .748	6.4 1/4	6.0 15/64	42.9 1 11/16	47.2 1 55/64	1.0 .040	M8	.54 1.2
40	VS-40MM	32648 7340	80.000 3.1496	30.2 1 3/16	22.0 .866	7.9 5/16	6.7 17/64	49.2 1 15/16	52.4 2 1/16	1.6 .062	M8	.68 1.5
45	VS-45MM	35144 7901	85.000 3.3465	30.2 1 3/16	22.0 .866	7.9 5/16	6.7 17/64	49.2 1 15/16	58.3 2 19/64	1.6 .062	M8	.73 1.6
50	VS-50MM	35090 7889	90.000 3.5433	32.5 1 9/32	23.0 .906	9.5 3/8	7.1 9/32	51.6 2 1/32	62.7 2 15/32	1.6 .062	M10	.82 1.8
55	VS-55MM	43377 9752	100.000 3.9370	33.3 1 5/16	25.0 .984	9.5 3/8	7.9 5/16	55.6 2 3/16	69.1 2 23/32	2.0 .080	M10	1.04 2.3
60	VS-60MM	52437 11789	110.000 4.3307	39.7 1 9/16	27.0 1.063	11.1 7/16	8.7 11/32	65.1 2 9/16	75.8 2 63/64	2.0 .080	M10	1.41 3.1

Metric dimensions for reference only.
Not all parts are available from stock. Please contact customer service for availability (800) 626-2120.
For more information on bearing capabilities outside of our standard offering, please contact Application Engineering (800) 626-2093.

Mounted Ball Bearings

Duty: Standard
Rolling Elements: Ball
Outer: Spherical O.D.
Self Alignment: +/- 1.5 Degrees
Lock: BOA Concentric
Seal: Contact and Flinger
Temperature: -20° to 200°F

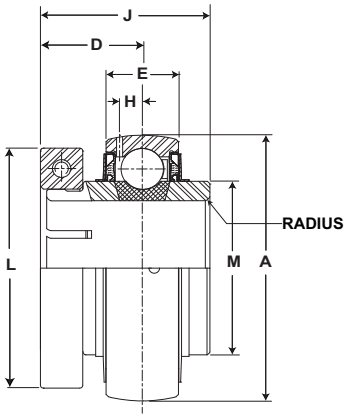

VB 200 Series Standard Duty Inserts - BOA Concentric Locking

Bore Diameter inch	Part No.	Basic Dynamic Rating lb/N	Dimensions inch / mm A	D	E	H	J	L	M	Max. Rad. To Clear	Torx Cap Screw	Unit Wt. lb/kg
3/4	VB-212	2611 11614	1.8504 47	25/32 19.8	.594 15	5/32 4.0	1 9/32 32.5	1 3/4 44.5	1 3/16 30.2	0.04 1.0	T-25	0.5 .23
7/8 15/16 1	VB-214 VB-215 VB-216	2801 12459	2.0472 52	7/8 22.2	.594 15	5/32 4.0	1 7/16 36.5	1 15/16 49.2	1 3/8 34.9	0.04 1.0	T-25	0.8 .36
1 1/8 1 3/16 1 1/4	VB-218 VB-219 VB-220S	4381 19487	2.4409 62	15/16 23.8	.709 18	13/64 5.2	1 9/16 39.7	2 3/16 55.6	1 19/32 40.5	0.04 1.0	T-25	1.1 .50
1 1/4	VB-220	5782 25718	2.8346 72	1 1/16 27.0	.750 19	15/64 6.0	1 3/4 44.5	2 7/16 61.9	1 55/64 47.2	0.04 1.0	T-27	1.5 .68
1 3/8 1 7/16	VB-222 VB-223	5782 25718	2.8346 72	1 1/16 27.0	.750 19	15/64 6.0	1 3/4 44.5	2 9/16 65.1	1 55/64 47.2	0.04 1.0	T-27	1.5 .68
1 1/2	VB-224	7340 32648	3.1496 80	1 1/4 31.8	.875 22	17/64 6.7	2 50.8	2 11/16 68.3	2 1/16 52.4	0.062 1.6	T-27	1.8 .82
1 5/8	VB-226	7901 35144	3.3465 85	1 1/4 31.8	.875 22	17/64 6.7	2 50.8	2 13/16 71.4	2 19/64 58.3	0.062 1.6	T-27	1.9 .86
1 11/16 1 3/4	VB-227 VB-228	7901 35144	3.3465 85	1 1/4 31.8	.875 22	17/64 6.7	2 50.8	2 15/16 74.6	2 19/64 58.3	0.062 1.6	T-27	1.9 .86
1 15/16 2	VB-231 VB-232S	7889 35090	3.5433 90	1 11/32 34.1	.906 23	9/32 7.1	2 3/32 53.2	3 3/8 85.7	2 15/32 62.7	0.062 1.6	T-30	2.4 1.09
2	VB-232	9752 43377	3.9370 100	1 3/8 34.9	.984 25	5/16 7.9	2 1/4 57.2	3 1/2 88.9	2 23/32 69.1	0.08 2.0	T-30	2.9 1.32
2 3/16	VB-235	9752 43377	3.9370 100	1 3/8 34.9	.984 25	5/16 7.9	2 1/4 57.2	3 5/8 92.1	2 23/32 69.1	0.08 2.0	T-30	2.9 1.32
2 1/4	VB-236	11789 52437	4.3307 110	1 5/8 41.3	1.063 27	11/32 8.7	2 5/8 66.7	4 1/16 103.2	2 63/64 75.8	0.08 2.0	T-45	4.3 1.95
2 7/16	VB-239	11789 52437	4.3307 110	1 5/8 41.3	1.063 27	11/32 8.7	2 5/8 66.7	4 1/8 104.8	2 63/64 75.8	0.08 2.0	T-45	4.3 1.95

Browning®

Mounted Ball Bearings

Duty: Standard
Rolling Elements: Ball
Outer: Spherical O.D.
Lock: Eccentric
Seal: Contact and Flinger
Temperature: -20° to 200°F

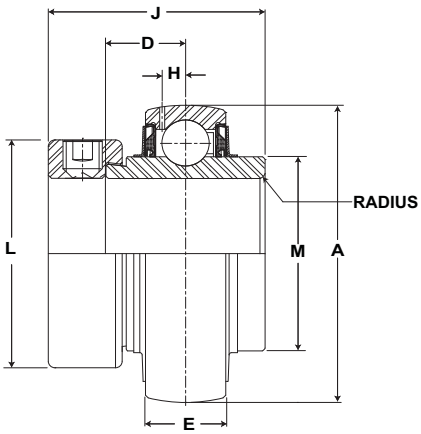

VE 200 Series Standard Duty Inserts - Eccentric Locking

Bore Diameter inch	Part No.	Basic Dynamic Rating lb/N	Dimensions inch / mm A	D	E	H	J	L	M	Max. Rad. To Clear	Setscrew Tap	Unit Wt. lb/kg
1/2 5/8	VE-208 VE-210	2108 9377	1.5748 40	35/64 13.9	.512 13	9/64 3.6	1 15/32 37.3	1 3/16 30.2	31/32 24.6	.055 1.4	1/4-28	.6 .27
3/4	VE-212	2611 11614	1.8504 47	43/64 17.1	.591 15	5/32 4.0	1 23/32 43.7	1 5/16 33.3	1 3/16 30.2	.070 1.8	1/4-28	.6 .27
7/8 15/16 1	VE-214 VE-215 VE-216	2801 12459	2.0472 52	11/16 17.5	.591 15	5/32 4.0	1 3/4 44.5	1 1/2 38.1	1 3/8 34.9	.070 1.8	1/4-28	.8 .36
1 1/8 1 3/16 1 1/4	VE-218 VE-219 VE-220S	4381 19487	2.4409 62	23/32 18.3	.709 18	13/64 5.2	1 29/32 48.4	1 3/4 44.5	1 19/32 40.5	.080 2.0	5/16-24	1.1 .50
1 1/4 1 3/8 1 7/16	VE-220 VE-222 VE-223	5782 25718	2.8346 72	3/4 19.1	.748 19	15/64 6.0	2 1/64 51.2	2 3/16 55.6	1 55/64 47.2	.080 2.0	3/8-24	1.4 .64
1 1/2	VE-224	7340 32648	3.1496 80	27/32 21.4	.866 22	17/64 6.7	2 7/32 56.4	2 3/8 60.3	2 1/16 52.4	.095 2.4	3/8-24	1.7 .77
1 5/8 1 11/16 1 3/4	VE-226 VE-227 VE-228	7901 35144	3.3465 85	27/32 21.4	.866 22	17/64 6.7	2 7/32 56.4	2 1/2 63.5	2 19/64 58.3	.110 2.8	3/8-24	1.8 .82
1 15/16	VE-231	7889 35090	3.5433 90	31/32 24.6	.906 23	9/32 7.1	2 15/32 62.7	2 3/4 69.9	2 15/32 62.7	.110 2.8	3/8-24	2.3 1.04
2 2 3/16	VE-232 VE-235	9752 43377	3.9370 100	1 3/32 27.8	.984 25	5/16 7.9	2 13/16 71.4	3 76.2	2 23/32 69.1	.125 3.2	7/16-20	3 1.36
2 1/4 2 7/16	VE-236 VE-239	11789 52437	4.3307 110	1 7/32 31.0	1.063 27	11/32 8.7	3 1/16 77.8	3 3/8 85.7	2 63/64 75.8	.125 3.2	7/16-20	4 1.81

Replacement collar part numbers can be found on page G-214.

Metric dimensions for reference only.
Not all parts are available from stock. Please contact customer service for availability (800) 626-2120.
For more information on bearing capabilities outside of our standard offering, please contact Application Engineering (800) 626-2093.

Mounted Ball Bearings

Duty: Medium
Rolling Elements: Ball
Outer: Spherical O.D.
Lock: Setscrew
Seal: Contact and Flinger
Temperature: -20° to 200°F

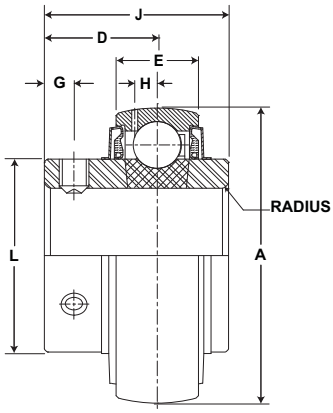

VS 300 Series Medium Duty Inserts - Setscrew Locking

Bore Diameter inch	Part No.	Basic Dynamic Rating lb/N	Dimensions inch / mm							Max. Rad. To Clear	Setscrew Tap	Unit Wt. lb/kg
			A	D	E	G	H	J	L			
1	VS-316	4381 19487	2.4409 62	7/8 22.2	.709 18.0	7/32 5.6	13/64 5.2	1 1/2 38.1	1 19/32 40.5	.040 1.0	1/4-28	.9 .41
1 3/16	VS-319	5782 25718	2.8346 72	1 25.4	.748 19.0	1/4 6.4	15/64 6.0	1 11/16 42.9	1 55/64 47.2	.040 1.0	5/16-24	1.2 .54
1 7/16	VS-323	7340 32648	3.1496 80	1 3/16 30.2	.866 22.0	5/16 7.9	17/64 6.7	1 15/16 49.2	2 1/16 52.4	.062 1.6	5/16-24	1.6 .73
1 1/2	VS-324	7901 35144	3.3465 85	1 3/16 30.2	.866 22.0	5/16 7.9	17/64 6.7	1 15/16 49.2	2 19/64 58.3	.062 1.6	5/16-24	1.6 .73
1 11/16 1 3/4	VS-327 VS-328	7889 35090	3.5433 90	1 9/32 32.5	.906 23.0	3/8 9.5	9/32 7.1	2 1/32 51.6	2 15/32 62.7	.062 1.6	3/8-24	1.8 .82
1 15/16	VS-331	9752 43377	3.9370 100	1 5/16 33.3	.984 25.0	3/8 9.5	5/16 7.9	2 3/16 55.6	2 23/32 69.1	.080 2.0	3/8-24	2.3 1.04
2 3/16	VS-335	11789 52437	4.3307 110	1 9/16 39.7	1.063 27.0	7/16 11.1	21/64 8.3	2 9/16 65.1	2 63/64 75.8	.080 2.0	3/8-24	3.1 1.41

Browning®

Mounted Ball Bearings

Duty: Standard
Rolling Elements: Ball
Outer: Spherical O.D.
Lock: BOA Concentric
Seal: Contact and Flinger
Temperature: -20° to 200°F

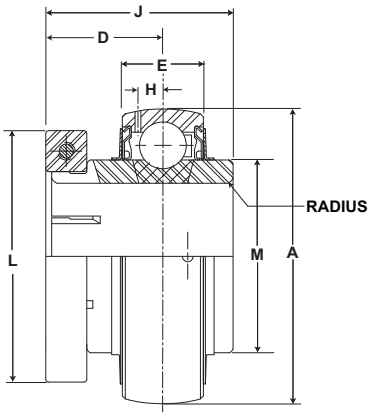

VB 300 Series Medium Duty Inserts - BOA Concentric Locking

Bore Diameter inch	Part No.	Basic Dynamic Rating lb/N	Dimensions inch / mm							Max. Rad. To Clear	Furx Cap Screw	Unit Wt. lb/kg	Collar No.
			A	D	E	G	H	J	L				
1	VB-316	4381 19487	2.4409 62	7/8 22.2	.709 18.0	7/32 5.6	13/64 5.2	1 9/16 39.7	2 1/16 52.4	.040 1.0	T-25	.9 .41	B-19A
1 3/16	VB-319	5782 25718	2.8346 72	1 25.4	.748 19.0	1/4 6.4	15/64 6.0	1 3/4 44.5	2 7/16 61.9	.040 1.0	T-27	1.2 .54	B-23A
1 7/16	VB-323	7340 32648	3.1496 80	1 3/16 30.2	.866 22.0	5/16 7.9	17/64 6.7	2 50.8	2 11/16 68.3	.062 1.6	T-27	1.6 .73	B-25A
1 1/2	VB-324	7901 35144	3.3465 85	1 3/16 30.2	.866 22.0	5/16 7.9	17/64 6.7	2 50.8	2 13/16 71.4	.062 1.6	T-27	1.6 .73	B-27A
1 11/16 1 3/4	VB-327 VB-328	7889 35090	3.5433 90	1 9/32 32.5	.906 23.0	3/8 9.5	9/32 7.1	3 76.2	3 1/4 82.6	.062 1.6	T-30	1.8 .82	B-31A
1 15/16	VB-331	9752 43377	3.9370 100	1 5/16 33.3	.984 25.0	3/8 9.5	5/16 7.9	2 1/4 57.2	3 1/2 88.9	.080 2.0	T-30	2.3 1.04	B-35A
2 3/16	VB-335	11789 52437	4.3307 110	1 9/16 39.7	1.063 27.0	7/16 11.1	11/32 8.7	2 5/8 66.7	4 1/16 103.2	.080 2.0	T-45	3.1 1.41	B-39A

Metric dimensions for reference only.
Not all parts are available from stock. Please contact customer service for availability (800) 626-2120.
For more information on bearing capabilities outside of our standard offering, please contact Application Engineering (800) 626-2093.

Locking Collar Replacement Tables

Eccentric Locking Collar Table					
Bore Diameter (inch)	Series				Collar No.
	VE-100	VE-200	SLE-100	RUBRE-100	
1/2	VE-108	VE-208	SLE-108	-	ELC-08
5/8	VE-110	VE-210	SLE-110	-	ELC-10
3/4	VE-112	VE-212	SLE-112	RUBRE-112	ELC-12
7/8	VE-114	VE-214	SLE-114	-	ELC-14
15/16	VE-115	VE-215	SLE-115	RUBRE-115	ELC-15
1	VE-116	VE-216	SLE-116	RUBRE-116	ELC-16
1 1/8	VE-118	VE-218	SLE-118	-	ELC-18
1 3/16	VE-119	VE-219	SLE-119	-	ELC-19
1 1/4S	VE-120S	VE-220S	SLE-120S	-	ELC-20S
1 1/4	VE-120	VE-220	SLE-120	-	ELC-20
1 3/8	VE-122	VE-222	SLE-122	-	ELC-22
1 7/16	VE-123	VE-223	SLE-123	-	ELC-23
1 1/2	VE-124	VE-224	SLE-124	-	ELC-24
1 5/8	-	VE-226	-	-	ELC-26
1 11/16	VE-127	VE-227	-	-	ELC-27
1 3/4	VE-128	VE-228	-	-	ELC-28
1 15/16	VE-131	VE-231	-	-	ELC-31
2	VE-132S	-	-	-	ELC-32S
2	VE-132	VE-232	-	-	ELC-32
2 3/16	VE-135	VE-235	-	-	ELC-35
2 1/4	-	VE-236	-	-	ELC-36
2 7/16	-	VE-239	-	-	ELC-39

BOA Locking Collar Table					
Bore Diameter		Standard Duty		Medium Duty	
inch	mm	Insert	Collar	Insert	Collar
3/4 -	- 20	VB-212 VB-20MM	2-012B Lock Collar	-	-
7/8	-	VB-214	2-015 Lock Collar	-	-
15/16	-	VB-215	2-015 Lock Collar	-	-
1 -	- 25	VB-216 VB-25MM	2-015 Lock Collar	VB-316	2-13A Lock Collar
1 1/8	-	VB-218	2-13A Lock Collar	-	-
1 3/16	30	VB-219 VB-30MM	2-13B Lock Collar	VB-319	2-17A Lock Collar
1 1/4*	-	VB-220S	2-13B Lock Collar	-	-
1 1/4	-	VB-220	2-17A Lock Collar	VB-220	2-17A Lock Collar
1 3/8	-	VB-222	2-17B Lock Collar	-	-
1 7/16	35	VB-223 VB-35MM	2-17B Lock Collar	VB-323	2-19A Lock Collar
1 1/2	40	VB-224 VB-40MM	2-19A Lock Collar	VB-324	2-111A Lock Collar
1 5/8	-	VB-226	2-111A Lock Collar	-	-
1 11/16	-	VB-227	2-111B Lock Collar	VB-327	2-115A Lock Collar
1 3/4	45	VB-228 VB-45MM	2-111B Lock Collar	VB-328	2-115A Lock Collar
1 15/16	50	VB-231 VB-50MM	2-115B Lock Collar	VB-331	2-23A Lock Collar
2*	-	VB-232S	2-115B Lock Collar	VB-232S	2-115B Lock Collar
2	-	VB-232	2-23A Lock Collar	VB-232	2-23A Lock Collar
2 3/16	-	VB-235	2-23B Lock Collar	VB-335	2-27A Lock Collar
2 1/4	-	VB-236	2-27A Lock Collar	-	-
2 3/8	60	VB-60MM	2-27B Lock Collar	-	-
2 7/16	-	VB-239	2-27B Lock Collar	-	-

*Reduced Housing

Browning® Cylindrical OD Insert Bearings

Browning VER Style Ball Bearings

Browning VER bearings feature black oxide treated inner and outer rings, and extended inner race bearing with ball riding nylon retainer. Shaft lock is achieved by 120° spaced diamond faceted setscrew locking. The contact seal, with black oxide treated flinger provides a good balance between contaminant resistance, grease loss and friction.

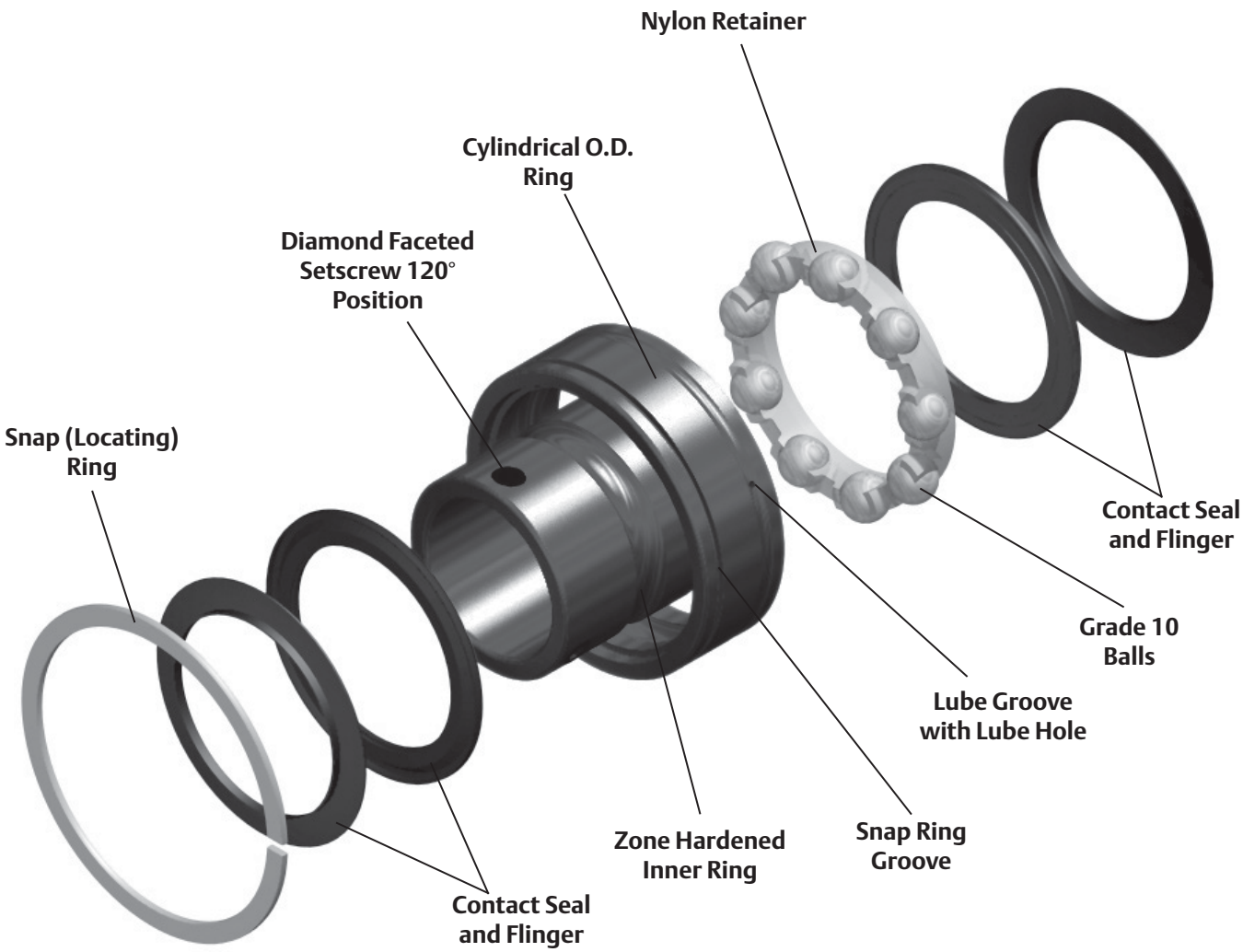

Browning VER Style Ball Nomenclature

VER - Cylindrical O.D. Bearing With Snap Ring

Duty

2 - Standard Duty - 200 Series

Bore Size

Inch - ##/16 (ex. 20/16 = 1 1/4”)

S for 1 1/4” and 2” Reduced

Options

S### # - Special Design

VER - 2 24 S####

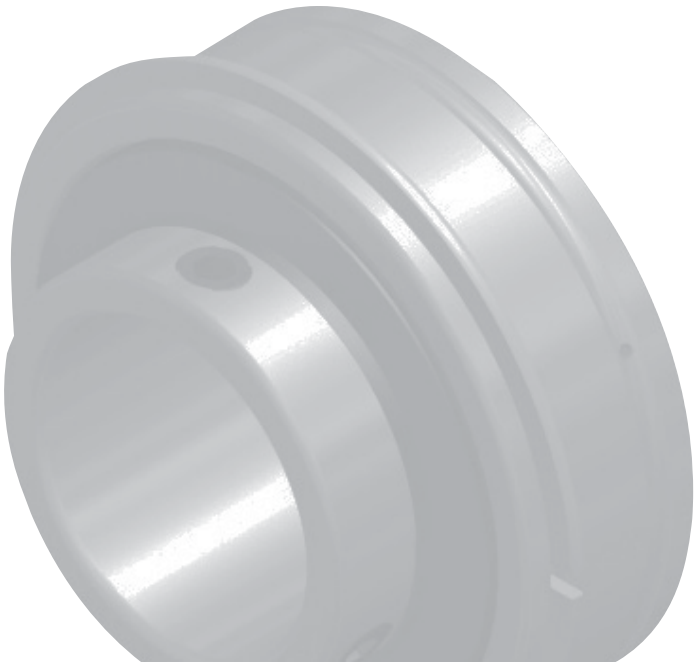

Features and Benefits

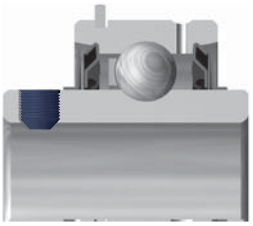

Setscrew Locking

120° spaced, balanced three point contact minimizes inner ring distortion vibration, reduces noise, and improves reliability. Precision manufactured diamond faceted setscrews contribute to improved clamping and resistance to back out.

Sealing

Positive contract molded nitrile rubber contact seal with an auxiliary flinger element standard. The contact seal allows grease purge and helps keep contamination out of the bearing while the flinger provides a rotating shield that directs contamination away from the seal.

Zone Hardened Inner Race

Browning incorporates a unique heat treat process that hardens the inner race only where it is needed...under the ball path. The zone hardened inner race results in improved lock reliability as a result of less distortion at setscrew location and improved thread conformity resulting in improved clamping and resistance to setscrew back-out.

Identification Marking

Browning VER bearings have the part number laser marked on the inner ring for easy verification of the part number during installation and for replacement.

Cylindrical OD Insert Bearings

Duty: Standard
Rolling Elements: Ball
Outer: Cylindrical O.D. Outer
Lock: Setscrew
Seal: Contact Seal and Flinger
Temperature: -20° to 200°F
Relube: Through Groove In O.D.

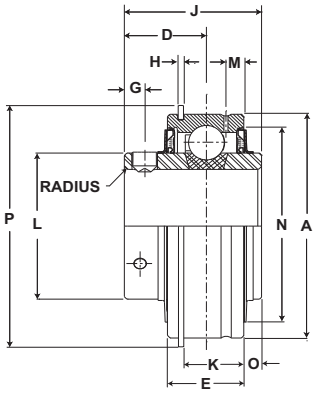

VER 200 Series Standard Duty Cylindrical O.D. Inserts - Setscrew Locking

Bore Diameter inch	Part No.	Basic Dynamic Rating lb/N	Dimensions inch / mm A	D	G	E	H	J	K	L	N	O	P	Max. Rad. To Clear	Unit Wt. lb/kg
1/2	VER-208	2611	1.8504	23/32	11/64	5/8	3/64	1 7/32	31/64	1 3/16	1 19/32	3/16	2 1/16	.040	.6
5/8	VER-210	11614	47	18.3	4.4	15.9	1.2	31.0	12.3	30.2	40.5	4.8	52.4	1.02	.27
3/4	VER-212														
7/8	VER-214	2801	2.0472	13/16	13/64	3/4	3/64	1 3/8	39/64	1 3/8	1 53/64	3/16	2 17/64	.040	.7
15/16	VER-215	12459	52	20.6	5.2	19.1	1.2	34.9	15.5	34.9	46.4	4.8	57.5	1.02	.32
1	VER-216														
1 1/16	VER-217	4381	2.4409	7/8	7/32	7/8	1/16	1 1/2	11/16	1 19/32	2 3/32	3/16	2 21/32	.040	.9
1 1/8	VER-218	19487	62	22.2	5.6	22.2	1.6	38.1	17.5	40.5	53.2	4.8	67.5	1.02	.41
1 3/16	VER-219														
1 1/4	VER-220S														
1 1/4	VER-220	5782	2.8346	1	7/32	15/16	1/16	1 11/16	3/4	55/64	2 7/16	7/32	3 5/64	.040	1.4
1 3/8	VER-222	25718	72	25.4	5.6	23.8	1.6	42.9	19.1	21.8	61.9	5.6	78.2	1.02	.64
1 7/16	VER-223														
1 1/2	VER-224	7340	3.1496	1 3/16	1/4	1 3/32	1/16	1 15/16	29/32	2 1/16	2 47/64	13/64	3	.062	2
1 9/16	VER-225	32648	80	30.2	6.4	27.8	1.6	49.2	23.0	52.4	69.5	5.2	86.5	1.57	.91
1 5/8	VER-226	7901	3.3465	1 3/16	1/4	1 3/32	1/16	1 15/16	29/32	2 19/64	3	13/64	3 19/32	.062	2.3
1 11/16	VER-227	35144	85	30.2	6.4	27.8	1.6	49.2	23.0	58.3	76.2	5.2	91.3	1.57	1.04
1 3/4	VER-228														
1 15/16	VER-231	7889 35090	3.5433 90	1 9/32 32.5	19/64 7.5	1 1/8 28.6	3/32 2.4	2 1/32 51.6	29/32 23.0	2 15/32 62.7	3 5/32 80.2	3/16 4.8	3 25/32 96.0	.062 1.57	2.4 1.09
2	VER-232	9752	3.9370	1 5/16	19/64	1 3/16	3/32	2 3/16	31/32	2 23/32	3 15/32	9/32	4 3/16	.080	3
2 3/16	VER-235	43377	100	33.3	7.5	30.2	2.4	55.6	24.6	69.1	88.1	7.1	106.4	2.03	1.36
2 1/4	VER-236	11789	4.3307	1 9/16	19/64	1 1/4	3/32	2 9/16	1 1/32	2 63/64	3 13/16	3/8	4 19/32	.080	4
2 3/8	VER-238	52437	110	39.7	7.5	31.8	2.4	65.1	26.2	75.8	96.8	9.5	116.7	2.03	1.81
2 7/16	VER-239														

Outside diameter may be oversized due to seal press fit.
Metric dimensions for reference only.

Mounted Ball Bearing Engineering see page G-220.

For more information on bearing capabilities outside of our standard offering, please contact Application Engineering (800) 626-2093.

Table of Contents

Load Ratings and Life

Life Calculations

The L10 (rating) life for any given application and bearing selection can be calculated in terms of millions of revolutions by using the bearing Basic Dynamic Rating and applied radial load (or, equivalent radial load in the case of radial bearing applications having combined radial and thrust loads). The L10 life for any given application can be calculated in terms of hours, using the bearing Basic Dynamic Rating, applied load (or equivalent radial load) and suitable speed factors, by the following equation:

$$L_{10} = \left(\frac{C}{P}\right)^3 x \frac{1{,}000{,}000}{60 \times n} = \left(\frac{C}{P}\right)^3 x \frac{16667}{n}$$

Where:

L_{10} = The # of hours that 90% of identical bearings under ideal conditions will operate at a specific speed and condition before fatigue is expected to occur.

C = Basic Dynamic Rating (lbs) 1,000,000 Revolutions

P = Constant Equivalent Radial Load (lbs)

n = Speed (RPM)

Additionally, the ABMA provides application factors for all types of bearings which need to be considered to determine an adjusted Rated Life (Lna). L10 life rating is based on laboratory conditions yet other factors are encountered in actual bearing application that will reduce bearing life. Lna life rating takes into account reliability factors, material type, and operating conditions.

$$L_{na} = a_1 \times a_2 \times a_3 \times L_{10}$$

Where:

L_{na} = Adjusted Rated Life.

a_1 = Reliability Factor. Adjustment factor applied where estimated fatigue life is based on reliability other than 90% (See Table 1).

Table 1 Life Adjustment Factor for Reliability

Reliability %	L_{na}	a_1
90	L10	1
95	L5	0.62
96	L4	0.53
97	L3	0.44
98	L2	0.33
99	L1	0.21
50	L50	5

a_2 = Material Factor. Life adjustment for bearing race material. Regal Power Transmission Solutions bearing races are manufactured from bearing quality steel. Therefore the a_2 factor is 1.0.

a_3 = Life Adjustment Factor for Operating Conditions. This factor should take into account the adequacy of lubricant, presence of foreign matter, conditions causing changes in material properties, and unusual loading or mounting conditions. Assuming a properly selected and mounted bearing having adequate seals and lubricant operating below 250°F and tight fitted to the shaft, the a_3 factor should be 1.0.

Mounted bearings are typically "slip fitted" to the shaft and rely on design features such as the inner race length and locking device for support. ABMA recommends an a_3 factor of .456 for "slip fit" ball bearings. See sample calculations on page G-224.

Vibration and shock loading can act as an additional loading to the steady expected applied load. When shock or vibration is present, an a_3 Life Adjustment Factor can be applied. Shock loading has many variables which often are not easily determined. When shock or vibration is present, the following a_3, Life Adjustment Factors are recommended. The shock factor is used in combination with the "slip fit" factor.

The a_3 factor takes into account a wide range of application and mounting conditions as well as bearing features and design. Accurate determination of this factor is normally achieved through testing and in-field experience. Regal Power Transmission Solutions offers a wide range of options which can maximize bearing performance. Consult Application Engineering for more information. See sample calculations on page G-224.

Table 2 Shock/Vibration Factor

Type	a_3 Factor
Steady Loading	1.0
Light Shock/Vibration	.5
Moderate Shock/Vibration	.3

Load Ratings and Life Continued

Combined Load - Ball Bearings

For applications where a combination of both radial and thrust loads are applied to the bearing the equivalent radial load must be calculated and applied to the L10 life formula.

1. Use Table 3 (below) and Table 4 (page G-228) to identify the relative axial load factor (ND2).
2. Determine the relative axial load (RAL):

$$\text{RAL} = \frac{F_a}{ND^2}$$

- applied thrust load
- relative axial load factor

3. Match the nearest relative axial load value in Table 3 to the corresponding "e" value. For precise calculation, linearly interpolate the values for "e" for your exact relative axial load value.

Table 3 Equivalent Load Calculation Data - Ball Bearings

Relative Axial Load	e	Fa / Fr ≤ e		Fa / Fr > e	
		x	y	x	y
24.92	0.19				2.30
50.03	0.22				1.99
99.91	0.26				1.71
149.35	0.28				1.55
200.10	0.30	1	0	0.56	1.45
300.15	0.34				1.31
500.25	0.38				1.15
749.65	0.42				1.04
999.05	0.44				1.00

4. Calculate Fa/Fr and compare value to the "e" value found in step #3 above.
5. Choose values for "X" and "Y" based on step #3 & 4 and from Table 3. Linear interpolation is recommended for exact calculations.
6. Calculate equivalent radial load using the following equation:

P = XFr + YFa

7. Calculate the adjusted life (Lna) using the life calculation formula above.

Variable Load Formula

Root mean load (RML) is to be used when a number of varying loads are applied to a bearing for varying time limits. Maximum loading still must be considered for bearing size selection.

$$\text{RML}^* = \sqrt[3]{\frac{(L_1^3 N_1) + (L_2^3 N_2) + (L_3^3 N_3)}{100}}$$

Where:
RML = Root Mean Load (lbs.)
L_1, L_2, etc. = Load in pounds
N_1, N_2, etc. = Percent of total time operated at loads L_1, L_2, etc.

*Apply RML to rating at mean speed to determine resultant life.

Mean Speed Formula

The following formula is to be used when operating speed varies over time.

$$\text{Mean Speed} = \frac{S_1N_1 + S_2N_2 + S_3N_3}{100}$$

S_1S_2, etc = Speeds in RPM
N_1N_2, etc = Percentage of total time operated at speeds S_1S_2, etc

High Load Applications

Applications where the loading approaches the load listed in the rating tables on pages G-230 to G-233 at 5000 hours life and 150/250 RPM, should be reviewed and given special consideration.

Modifications to consider Include:

- Shafting size should be closely controlled for a line to line to a light press fit.
- Skwezloc® Locking Collar or double lock is the preferred lock.
- Lubricants with "EP" extreme pressure additives may be required.
- Care in housing selection, load direction, and mounting techniques should be exercise

Load Ratings and Life Continued

High Speed Applications

Applications where the speed is in the range of 80-100% of the maximum speeds listed in the rating tables on pages G-230 to G-233, should be reviewed and given special consideration.

Modifications to consider include:

- Shaft size should be controlled to specifications listed in the installation section. See tables above.
- SKWEZLOC Locking Collar and double lock are the preferred lock systems for high speed applications.
- High quality lubricants should be used.
- Grease should be added more frequently and in small amounts. See Page G-254.
- Care in mounting techniques should be exercised. See Page G-246 to G-253.

Bearing Life In Oscillating Applications

The equivalent rotative speed (ERS) is used in life calculations when the bearing does not make complete revolutions during operation. The ERS is then used as the bearing operating speed in the calculation of the L10 (Rating) Life. The formula is based on sufficient angular rotation to have roller paths overlap.

ERS = Equivalent Rotative Speed

N = Total number of degrees per minute through which the bearing will rotate.

$$ERS = \frac{N}{360}$$

In the above formula, allowance is made for the total number of stress applications on the weakest race per unit time, which, in turn, determines fatigue life and the speed factors. The theory behind fretting corrosion is best explained by the fact that the rolling elements in small angles of oscillation retrace a path over an unchanging area of the inner or outer races where the lubricant is prevented by inertia from flowing in behind the roller as the bearing oscillates in one direction. Upon reversal, this small area of rolling contact is traversed by the same roller in the dry state. The friction of the two unlubricated surfaces causes fretting corrosion and produces failures which are unpredictable from a normal life standpoint.

With a given bearing selected for an oscillating application, the best lubrication means is a light mineral oil under positive flow conditions. With a light oil, there is a tendency for all areas in the bearing load zone to be immersed in lubricant at all times. The full flow lubrication dictates that any oxidized material which may form is immediately carried away by the lubricant, and since these oxides are abrasive, further wear tends to be avoided. If grease lubrication must be used, it is best to consult with either the bearing manufacturer or the lubricant manufacturer to determine the best possible type of lubricant. Greases have been compounded to resist the detrimental effect of fretting corrosion for such applications.

Static Load Rating

The "static load rating" for rolling element bearings is that uniformly distributed static radial load acting on a non-rotating bearing, which produces a contact stress of 580,000 psi at the center of the most heavily loaded rolling element. At this stress level, plastic deformation begins to be significant. Experience has shown that the plastic deformation at this stress level can be tolerated in most bearing applications without impairment of subsequent bearing operation. In certain applications where subsequent rotation of the bearing is slow and where smoothness and friction requirements are not too exacting, a higher static load limit can be tolerated. Where extreme smoothness is required or friction requirements are critical, a lower static load limit may be necessary.

Minimum Bearing Load

Skidding, or sliding, of the rolling elements on the raceway instead of a true rolling motion can cause excessive wear. Applications with high speeds and light loading are particularly prone to skidding. As a general guideline, rolling element bearings should be radially loaded at least 1% of Basic Dynamic Rating for ball bearings. For applications where load is light relative to the bearings dynamic load rating, consult Application Engineering for assistance.

Load Ratings and Life Continued

Computing Bearing Loads

In the computation of bearing loads in any application of a Regal Power Transmission Solutions unit, the principal factor determining the selection of the unit is the equivalent radial load to which the bearing will be subjected. These radial loads result from any one or any combination of the following sources:

1. Weights of machine parts supported by bearings.
2. Tension due to belt or chain pull.
3. Centrifugal force from out of balance, eccentric or cam action.

The resulting load from any one, or any combination of the above sources is further determined by knowing:

1. The magnitude of the load.
2. Direction of the load.
3. The point of load application.
4. The distance between bearing centers.

Bearing loads are the result of force acting on the shaft. Direction, magnitude, and location with respect to the bearings must be considered when calculating bearing loads. The following cases are typical examples of loads encountered and methods of calculating bearing loads.

CASE #1
Drive Load Calculation

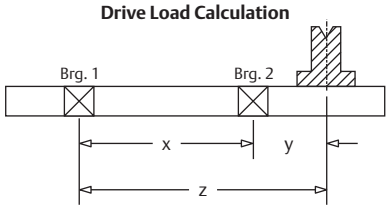

$$P = \frac{126{,}000 \times HP}{RPM \times d} \times K$$ = Apply P to Case 2, 3 or 4 if applicable

HP = horsepower
RPM = revolutions per minute
d = pitch of pulley in inches
K = constant for type of drive used
K = 1.5 for V-belts
K = 2 to 3 for flat transmission belts
K = 1.1 for chain drives

CASE #2
Cantilever and Drive

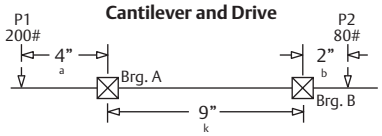

$$\text{Load on Bearing A} = \frac{P_1 \times (a + k) - (P_2 \times b)}{k}$$

$$= \frac{200 \times (4 + 9) - (80 \times 2)}{9}$$

= 271 lbs.

$$\text{Load on Bearing B} = \frac{P_2 \times (k + b) - (P_1 \times a)}{k}$$

$$= \frac{80 \times (9 + 2) - (200 \times 4)}{9}$$

= 9 lbs.

CASE #3
Straddle, Cantilever Drive

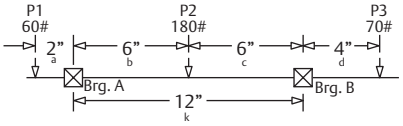

$$\text{Load on Bearing A} = \frac{P_1 \times (k + a) + (P_2 \times c) - (P_3 \times d)}{k}$$

$$= \frac{60 \times (12 + 2) + (180 \times 6) - (70 \times 4)}{12}$$

= 137 lbs.

$$\text{Load on Bearing B} = \frac{-(P_1 \times a) + (P_2 + b) + P_3 \times (k + d)}{k}$$

$$= \frac{-(60 \times 2) + (180 \times 6) + 70 \times (12 + 4)}{12}$$

= 173 lbs.

CASE #4
Straddle Mount, Cantilever Drive

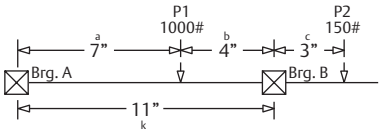

$$\text{Load on Bearing A} = \frac{(P_1 \times b) - (P_2 \times c)}{k}$$

$$= \frac{(1000 \times 4) - (150 \times 3)}{11}$$

= 323 lbs.

$$\text{Load on Bearing B} = \frac{(P_1 \times a) + (c + k) \times (P_2)}{k}$$

$$= \frac{(1000 \times 7) + (3 + 11) \times (150)}{11}$$

= 827 lbs.

CASE #5
Vibrating Drives

Load due to Centrifugal and Inertial Forces - In a shaker or gyrating screen bearing application, the load on the bearings is increased by sudden stopping, starting, and reversing of typically large loads. This can be expressed as a basic physical law:

Force = Mass x Accelerations

In order to use this law, we develop from it the following equation:

$$F = .000341 \times WR(RPM)^2$$

Where: F = Load of force in lbs.
W = Weight of rotating mass in lbs.
R = Radius of rotation or throw in feet
RPM = Shaft rotation in revolutions per minute

What is the centrifugal bearing load on a shaker screen which weighs 2,500 lbs., has a throw of 1/4 in. and whose shaft speed is 500 RPM?

$$F = .000341 \times 2{,}500 \times \frac{.250}{12} \times (500)^2 = 4{,}440 \text{ lbs.}$$

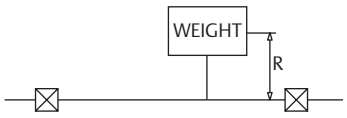

Load Ratings and Life Continued

Mounted Ball Bearing Selection - New Applications:

Using variations of the life formulas and application information, it is possible to select bearings based on desired life, load applied, and shaft speed. **This method can only be applied where axial load is less than or equal to 1/2 the radial load.**

1. Determine required application hours (Lna).

2. Calculate L_{10} using adjustment factors:

$$L_{10} = \frac{L_a}{a_1 \times a_2 \times a_3}$$

3. Calculate Basic Dynamic Radial Rating (Creq).

$$Creq = P \times \left(\frac{L_{10} \times N}{16{,}667} \right)^{1/3}$$

P = Constant Equivalent Radial Load (lbs)
N = Speed (RPM)

4. Use Table No. 4 and 5 on page G-227 to G-229, find a basic Dynamic Radial Rating Value greater than or equal to Creq calculated in step # 3.

5. Select any bearing from the row in step # 4 or larger. If Creq is greater than the largest Basic Dynamic Radial Rating Value of Table No. 4 or 5, go to the Mounted Roller Bearing Section H and I.

6. If Ball bearing is selected, proceed with housing, seal, and lock selection.

Typical operating temperature range for standard bearings is -20° to 200° F for Browning and -20°F to 220°F for Sealmaster Gold. For operating temperatures outside this range, contact Application Engineering. For Maximum speed information, see tables on pages G-235 and G-243

Application Examples:

Example #1 - Pure Radial Load

Question #1:
What is the adjusted bearing life (L_{na} hours) for an NP-39 Sealmaster Ball Bearing with no shock conditions and the following application criteria?

Design Load (P) = 1300 lbs.
Speed (n) = 1000 RPM
Shaft Size = 2 7/16 in.
Operating Temp. = 125°F

Solution:
1. Begin with the L_{10} life formula:

$$L_{10} = (C/P)^3 \times \frac{16667}{n}$$

Look up the insert of an NP-39 on page G-31. From Table No. 4 on page G-228, the Basic Dynamic Radial Rating is 11,789 lbs.

$$L_{10} = \left(\frac{11789}{1300} \right)^3 \times \frac{16667}{1000} = 12{,}430 \text{ hours}$$

2. Apply the life adjustment factors:

L_{na} hours = $L_{10} \times a_1 \times a_2 \times a_3$
L_{na} hours = 12,430 x 1 x 1 x 0.456
L_{na} hours = 5,700 hours

Load Ratings and Life Continued

Question #2:
What is the adjusted bearing life (L10 hours) for an NP-39 Sealmaster Ball Bearing with moderate shock conditions and the same applications criteria from above?

Solution:
1. From Table 2 on page G-221:

a_3 = 0.5 x 0.456

2. Re-Apply the life adjustment factors to the previously calculated L_{10} life:

L_{na} hours = L_{10} x a_1 x a_2 x a_3
L_{na} hours = 12,430 x 1 x 1 x (0.5 x 0.456)
L_{na} hours = 2,830 hours

Example #2 - Combined Radial and Thrust Load

Question #1:
What is the adjusted bearing life (L_{na} hours) for an NP-39 Sealmaster Ball Bearing with no shock conditions and the following application criteria?

Design Radial Load (F_r)	=	500 lbs.
Design Thrust Load (F_a)	=	1000 lbs.
Speed (n)	=	1000 RPM
Shaft Size	=	2 7/16 in.
Operating Temperature	=	125°F

Solution:
1. Calculate F_a/F_r = 1000/500 = 2
2. Look up the insert of an NP-39 on page G-31. From Table 4 on page G-228, ND^2 is 3.969 lbs and Basic Dynamic Rating is 11,789 lbs.
3. Begin by calculating the Relative Axial Load (RAL):

$$\text{RAL} = \frac{F_a}{ND^2} = \frac{1000}{3.9690} = 251 \text{ lbs.}$$

4. From Table 3 on page G-222, interpolate RAL between 200.10 and 300.15 and "e" between 0.30 and 0.34 to obtain "e" value:

$$\frac{251 - 200.10}{300.15 - 200.10} = \frac{e - 0.30}{0.34 - 0.30}$$

Therefore e = .32

5. From Table 3 on page G-222, determine the value of "X" and "Y" through interpolation. Interpolate "e" between 0.30 and 0.34 and "Y" between 1.45 and 1.31 because $F_a/F_r > e$

$$\frac{0.32 - 0.30}{0.34 - 0.30} = \frac{Y - 1.45}{1.31 - 1.45}$$

Therefore Y = 1.38 and X = .56

6. Determine the equivalent radial load (P)

$$P = (X F_r) + (Y F_a)$$
$$= (0.56 \times 500) + (1.38 \times 1000) = 1660 \text{ lbs.}$$
$$L_{10} = (C/P)^3 \times \frac{16667}{n}$$

Look up the insert of an NP-39 on page G-31. From Table 4 on page G-228, the Basic Dynamic Rating is 11,789 lbs.

$$L_{na} = .456 \times \left(\frac{11789}{1660}\right)^3 \times \frac{16667}{1000} = 2722 \text{ hours}$$

Bearing Load Rating Tables

Table 4 - Sealmaster Ball Bearing Load Ratings

Series	Standard Duty, ER and Material Handling						Medium Duty			Basic Dynamic Rating		Basic Static Rating		Relative Axial Load Factor (ND^2)		Thrust Rating	
	Bore Diameter		Unit Size	Standard Duty	ER	Material Handling	Bore Diameter		Medium Duty								
	inch	mm		Insert		Insert	inch	mm	Insert	lb	N	lb	N	lb	N	lb	N
2-012	1/2	-	8	2-08	ER-8	-	-	-	-	2611	11614	1444	6423	.706	3.1	741	3296
	9/16	-	9	2-09	ER-9	-	-	-	-								
	5/8	-	10	2-010	ER-10	-	-	-	-								
	11/16	-	11	2-011	ER-11	-	-	-	-								
	3/4	-	12	2-012	ER-12	MH-12	-	-	-								
	-	20	204	5204	ER-204	MH-204	-	-	-								
2-015	13/16	-	13	2-013	ER-13	-	-	-	-	2801	12459	1651	7344	.784	3.5	490	2180
	7/8	-	14	2-014	ER-14	-	-	-	-								
	15/16	-	15	2-015	ER-15	-	-	-	-								
	-	25	205	5205	ER-205	MH-205	-	-	-								
	1	-	16	2-1	ER-16	MH-16	-	-	-								
2-13	1 1/16	-	17	2-11	ER-17	-	15/16	-	3-015	4381	19488	2567	11419	1.300	5.8	1177	5236
	1 1/8	-	18	2-12	ER-18	-	-	25	5305								
	-	30	206	5206	ER-206	MH-206	1	-	3-1								
	1 3/6	-	19	2-13	ER-19	MH-19	-	-	-								
	1 1/4	-	20R	1-14	ER-20R	MH-20R	-	-	-								
2-17	1 1/4	-	20	2-14	ER-20	MH-20	-	30	5306	5782	25719	3493	15538	1.742	7.8	1709	7602
	1 5/16	-	21	2-15	ER-21	-	1 3/16	-	3-13								
	1 3/8	-	22	2-16	ER-22	-	-	-	-								
	-	35	207	5207	ER-207	-	-	-	-								
	1 7/16	-	23	2-17	ER-23	MH-23	-	-	-								
2-19	1 1/2	-	24	2-18	ER-24	MH-24	-	35	5307	7340	32650	4467	19870	2.250	10.0	2254	10026
	1 9/16	-	25	2-19	ER-25	-	1 7/16	-	3-17								
	-	40	208	5208	ER-208	-	-	-	-								
2-111	1 5/8	-	26	2-110	ER-26	-	1 1/2	-	3-18	7901	35145	5139	22859	2.500	11.1	2350	10453
	1 11/16	-	27	2-111	ER-27	MH-27	-	40	5308								
	1 3/4	-	28	2-112	ER-28	-	-	-	-								
	-	45	209	5209	ER-209	-	-	-	-								
2-115	1 13/16	-	29	2-113	ER-29	-	1 11/16	-	3-111	7889	35092	5216	23202	2.500	11.1	2350	10453
	1 7/8	-	30	2-114	ER-30	-	1 3/4	-	3-112								
	1 15/16	-	31	2-115	ER-31	MH-31	-	45	5309								
	-	50	210	5210	ER-210	MH-210	-	-	-								
	2	-	32R	1-2	ER-32R	-	-	-	-								

Setscrew locking standard duty, ER cylindrical O.D., Material Handling and Medium Duty bearing are shown.
For Skwezloc and Double Setscrew Locking use the equivalent setscrew lock rating in the table. Example:. 2-1, 2-1D and 2-1T all use the 2-015 series rating
For RB inserts use the equivalent ER series bearing listed to determine the capacity. Ex: RB-16, use ER-1

Table 4 - Sealmaster Ball Bearing Load Ratings continued

Series	Standard Duty, ER and Material Handling						Medium Duty			Basic Dynamic Rating		Basic Static Rating		Relative Axial Load Factor (ND^2)		Thrust Rating	
	Bore Diameter		Unit Size	Standard Duty	ER	Material Handling	Bore Diameter		Medium Duty								
	inch	mm		Insert		Insert	inch	mm	Insert	lb	N	lb	N	lb	N	lb	N
2-23	2	-	32	2-2	ER-32	MH-32	1 15/16	-	3-115	9752	43379	6601	29363	3.316	14.8	2886	12838
	2 1/8	-	34	2-22	ER-34	-	-	50	5310								
	-	55	211	5211	ER-211	-	-	-	-								
	2 3/16	-	35	2-23	ER-35	MH-35	-	-	-								
2-27	2 1/4	-	36	2-24	ER-36	-	-	55	5311	11789	52440	8150	36253	3.969	17.7	4105	18260
	-	60	212	5212	ER-212	-	2 3/16	-	3-23								
	2 3/8	-	38	2-26	ER-38	-	-	-	-								
	2 7/16	-	39	2-27	ER-39	MH-39	-	-	-								
2-211	2 1/2	-	40	-	ER-40	-	2 7/16	-	3-27	13971	62146	10063	44762	4.761	21.2	4503	20030
	2 11/16	-	43	2-211	ER-43	-	2 1/2	-	3-28								
	-	70	214	5214	ER-214	-	-	65	5313								
2-215	2 7/8	-	46	2-214	ER-46	-	2 11/16	-	3-211	14839	66007	11224	49927	5.237	23.3	5207	23162
	2 15/16	-	47	2-215	ER-47	-	-	70	5314								
	-	75	215	5215	ER-215	-	-	-	-								
2-33	3	-	48	-	ER-48	-	2 15/16	-	3-215	17412	77452	13174	58601	6.188	27.5	6032	26832
	-	80	216	5216	ER-216	-	-	75	5315								
	3 3/16	-	51	2-33	ER-51	-	3	-	3-3								
2-37	3 1/4	-	52	2-34	ER-52	-	-	80	5316	18681	83097	14496	64481	6.692	29.8	7474	33246
	3 3/8	-	54	2-36	ER-54	-	3 3/16	-	3-33								
	3 7/16	-	55	2-37	ER-55	-	-	-	-								
2-38	3 1/2	-	56	2-38	-	-	3 7/16	-	3-37	21566	95930	16301	72510	7.744	34.4	7839	34869
	-	90	218	5218		-	-	-	-								
2-43	3 15/16	-	63	-	ER-63	-	3 15/16	-	3-315	29905	133023	23553	104768	11.236	50.0	11097	49362
	-	100	-	-	-	-	-	100	5320								
	4	-	64	-	ER-64	-	4	-	3-4								
3-47	-	-	-	-	-	-	4 7/16	-	3-47	37482	166727	33267	147978	15.625	69.5	16697	74272
	-	-	-	-	-	-	4 15/16	-	3-415								

Setscrew locking standard duty, ER cylindrical O.D., Material Handling and Medium Duty bearing are shown.
For Skwezloc and Double Setscrew Locking use the equivalent setscrew lock rating in the table. Example:. 2-1, 2-1D and 2-1T all use the 2-015 series rating
For RB inserts use the equivalent ER series bearing listed to determine the capacity. Ex: RB-16, use ER-16

Table 5 - Browning Ball Bearing Load Ratings

Series	100, 200 & VER Bore Diameter		100 Series	200 Series	VER	300 Series Bore Diameter	300 Series Insert	Basic Dynamic Rating		Basic Static Rating		Relative Axial Load Factor (ND^2)		Thrust Rating	
	inch	mm	Insert	Insert		inch		lb	N	lb	N	lb	N	lb	N
L-10	1/2	-	VS-108	VS-208	-	-	-	2108	9377	1117	4969	.563	2.5	320	1423
2-012		-	-	-	VER-208	-	-	2611	11614	1444	6423	.706	3.1	741	3296
L-10	5/8	-	VS-110	VS-210	-	-	-	2108	9377	1117	4969	.563	2.5	320	1423
2-012			-	-	VER-210	-	-	2611	11614	1444	6423	.706	3.1	741	3296
2-012	3/4	-	VS-112	VS-212	VER-212	-	-	2611	11614	1444	6423	.706	3.1	741	3296
	-	20	-	VS-20MM	-	-	-								
2-015	7/8	-	VS-114	VS-214	VER-214	-	-	2801	12459	1651	7344	.784	3.5	490	2180
	15/16	-	VS-115	VS-215	VER-215	-	-								
	-	25	-	VS-25MM	-	-	-								
	1	-	VS-116	VS-216	VER-216	-	-								
2-13	1 1/8	-	VS-118	VS-218	VER-217	1	VS-316	4381	19488	2567	11419	1.300	5.8	1177	5236
	-	30	-	VS-30MM	-										
	1 3/16	-	VS-119	VS-219	VER-219										
	1 1/4S	-	VS-120S	VS-220S	VER-220S										
2-17	1 1/4	-	VS-120	VS-220	VER-220	1 3/16	VS-319	5782	25719	3493	15538	1.742	7.8	1709	7602
	1 3/8	-	VS-122	VS-222	VER-222										
	-	35	-	VS-35MM	-										
	1 7/16	-	VS-123	VS-223	VER-223										
2-19	1 1/2	-	VS-124	VS-224	VER-224	1 7/16	VS-323	7340	32650	4467	19870	2.250	10.0	2254	10026
	1 9/16	-	-	-	VER-225										
	-	40	-	VS-40MM	-										
2-111	1 5/8	-	VS-126	VS-226	VER-226	1 1/2	VS-324	7901	35145	5139	22859	2.500	11.1	2350	10453
	1 11/16	-	VS-127	VS-227	VER-227										
	1 3/4	-	VS-128	VS-228	VER-228										
	-	45	VS-45MM	VS-45MM	-										
2-115	1 15/16	-	VS-131	VS-231	VER-231	1 11/16	VS-327	7889	35092	5216	23202	2.500	11.1	2350	10453
	-	50	-	VS-50MM	-										
	2	-	VS-132S	VS-232S	-	1 3/4	VS-328								
2-23	2		VS-132	VS-232	VER-232	1 15/16	VS-331	9752	43379	6601	29363	3.316	14.8	2886	12838
		55	-	VS-55MM	-										
	2 3/16		VS-135	VS-235	VER-235										
2-27	2 1/4	-	-	VS-236	VER-236	2 3/16	VS-335	11789	52440	8150	36253	3.969	17.7	4105	18260
	-	60	-	VS-60MM	-										
	2 3/8	-	-	-	VER-238										
	2 7/16	-	-	VS-239	VER-239										

Setscrew locking 100, 200, 300 series and VER's shown.
For VE-100, RUBRE-100, RUBRS-100, SLS-100, LE-100, LR-100, LRS-100, LS-100 use equivalent ratings and factors for respective 100 series bore.
For VB-200, VE-200 equivalent ratings and factors for respective 200 series bore.
For VB-300 equivalent ratings and factors for respective 300 series bore.

Load and Speed

1. Table 6 displays the Sealmaster Gold and Material Handling ball bearing load capacities for a given L10 life, speed and shaft size.

2. Values in Table 6 represent radial loads at ideal conditions with press fit mounting to the shaft. ABMA recommends de-rating of slip fit mounted bearings. Elevated operating temperatures can reduce the load capacity of bearing steel where a material de-rating is also recommended.
   a. For operating temperatures up to 200°F, divide the value in the load table by 1.3 to obtain the slip fit derated value.
   b. For units designed for operating temperatures 200°F to 400°F, divide the value in the load table by 1.5 to obtain the slip fit/elevated temperature de-rate value.
   c. Values in Table 6 represent equivalent radial loads only. For combined radial/thrust loads see page G-222.

3. The gray shaded area indicates the maximum speed ratings for Skwezloc concentric locking collar and double setscrew lock bearings (applicable on sizes available). All speeds listed are for the standard felt seal. For speed ratings using alternate seals, see pages G-235 to G-240.

4. The double line indicates the maximum speed ratings of material handling bearings.

5. The blue shaded area represents maximum recommended load for given operating speed based on load of 25% BDR. It is NOT recommended to exceed these loads in general industrial applications. See note on page G-222 for high load applications.

6. Areas designated by "-" exceed maximum value for standard bearings. See note on page G-223.

7. Consult Application Engineering for load and speed applications not covered in this table.

Table 6 - Load/Speed Chart – Sealmaster Ball Bearings

Series	L10 Hours	Revolutions Per Minute																			
		50	150	500	1000	1250	1500	1750	2000	2500	3000	3500	4000	4500	5000	5500	6000	6500	7500	8000	10000
2-012	5000	652	652	491	390	362	341	324	310	287	270	257	246	236	228	221	215	209	199	195	181
	10000	652	583	390	310	287	270	257	246	228	215	204	195	188	181	175	170	166	158	155	144
	30000	583	404	270	215	199	188	178	170	158	149	141	135	130	126	122	118	115	110	107	100
	50000	491	341	228	181	168	158	150	144	133	126	119	114	110	106	103	100	97	92	91	84
	100000	390	270	181	144	133	126	119	114	106	100	95	91	87	84	81	79	77	73	72	67
2-015	5000	700	700	527	418	388	366	347	332	308	290	276	264	253	245	237	230	224	214	209	-
	10000	700	625	418	332	308	290	276	264	245	230	219	209	201	194	188	183	178	170	166	-
	30000	625	433	290	230	214	201	191	183	170	160	152	145	139	135	130	127	123	118	115	-
	50000	527	366	245	194	180	170	161	154	143	135	128	122	118	114	110	107	104	99	97	-
	100000	418	290	194	154	143	135	128	122	114	107	102	97	93	90	87	85	83	79	77	-
2-13	5000	1,095	1,095	825	654	608	572	543	519	482	454	431	412	396	383	371	360	351	334	327	-
	10000	1,095	978	654	519	482	454	431	412	383	360	342	327	315	304	294	286	278	265	260	-
	30000	978	678	454	360	334	315	299	286	265	250	237	227	218	211	204	198	193	184	180	-
	50000	825	572	383	304	282	265	252	241	224	211	200	191	184	178	172	167	163	155	152	-
	100000	654	454	304	241	224	211	200	191	178	167	159	152	146	141	137	133	129	123	121	-
2-17	5000	1,446	1,446	1,088	864	802	755	717	686	636	599	569	544	523	505	489	475	463	-	-	-
	10000	1,446	1,290	864	686	636	599	569	544	505	475	452	432	415	401	388	377	367	-	-	-
	30000	1,290	895	599	475	441	415	394	377	350	330	313	299	288	278	269	262	255	-	-	-
	50000	1,088	755	505	401	372	350	333	318	295	278	264	253	243	234	227	221	215	-	-	-
	100000	864	599	401	318	295	278	264	253	234	221	210	200	193	186	180	175	171	-	-	-
2-19	5000	1,835	1,835	1,381	1,096	1,018	958	910	870	808	760	722	691	664	641	621	-	-	-	-	-
	10000	1,835	1,638	1,096	870	808	760	722	691	641	603	573	548	527	509	493	-	-	-	-	-
	30000	1,638	1,136	760	603	560	527	501	479	445	418	397	380	365	353	342	-	-	-	-	-
	50000	1,381	958	641	509	472	445	422	404	375	353	335	321	308	298	288	-	-	-	-	-
	100000	1,096	760	509	404	375	353	335	321	298	280	266	254	245	236	229	-	-	-	-	-
2-111	5000	1,975	1,975	1,487	1,180	1,096	1,031	979	937	870	818	777	744	715	690	-	-	-	-	-	-
	10000	1,975	1,763	1,180	937	870	818	777	744	690	650	617	590	567	548	-	-	-	-	-	-
	30000	1,763	1,222	818	650	603	567	539	516	479	450	428	409	393	380	-	-	-	-	-	-
	50000	1,487	1,031	690	548	509	479	455	435	404	380	361	345	332	320	-	-	-	-	-	-
	100000	1,180	818	548	435	404	380	361	345	320	301	286	274	263	254	-	-	-	-	-	-

How to Read the Table
Example A: For a 1" standard duty ball bearing operating at 1000 RPM and desired 100,000 hours L10 life, 154 Lbs is the maximum allowable radial load.
Example B: If 230 lbs of radial load is applied to a 1" standard duty shaft operating at 1000 RPM, the resulting L10 life is 30,000 hours.

Table 6 - Load/Speed Chart – Sealmaster Ball Bearings continued

Series	L10 Hours	Revolutions Per Minute																			
		50	150	500	1000	1250	1500	1750	2000	2500	3000	3500	4000	4500	5000	5500	6000	6500	7500	8000	10000
2-115	5000	1,972	1,972	1,485	1,178	1,094	1,029	978	935	868	817	776	742	714	689	-	-	-	-	-	-
	10000	1,972	1,760	1,178	935	868	817	776	742	689	649	616	589	567	547	-	-	-	-	-	-
	30000	1,760	1,221	817	649	602	567	538	515	478	450	427	409	393	379	-	-	-	-	-	-
	50000	1,485	1,029	689	547	508	478	454	434	403	379	360	345	331	320	-	-	-	-	-	-
	100000	1,178	817	547	434	403	379	360	345	320	301	286	273	263	254	-	-	-	-	-	-
2-23	5000	2,438	2,438	1,835	1,457	1,352	1,273	1,209	1,156	1,073	1,010	959	918	882	-	-	-	-	-	-	-
	10000	2,438	2,176	1,457	1,156	1,073	1,010	959	918	852	802	762	728	700	-	-	-	-	-	-	-
	30000	2,176	1,509	1,010	802	744	700	665	636	591	556	528	505	486	-	-	-	-	-	-	-
	50000	1,835	1,273	852	676	628	591	561	537	498	469	445	426	410	-	-	-	-	-	-	-
	100000	1,457	1,010	676	537	498	469	445	426	395	372	353	338	325	-	-	-	-	-	-	-
2-27	5000	2,947	2,947	2,219	1,761	1,635	1,538	1,461	1,398	1,298	1,221	1,160	1,109	-	-	-	-	-	-	-	-
	10000	2,947	2,631	1,761	1,398	1,298	1,221	1,160	1,109	1,030	969	921	881	-	-	-	-	-	-	-	-
	30000	2,631	1,824	1,221	969	900	847	804	769	714	672	638	611	-	-	-	-	-	-	-	-
	50000	2,219	1,538	1,030	817	759	714	678	649	602	567	538	515	-	-	-	-	-	-	-	-
	100000	1,761	1,221	817	649	602	567	538	515	478	450	427	409	-	-	-	-	-	-	-	-
2-211	5000	3,493	3,493	2,629	2,087	1,937	1,823	1,732	1,656	1,538	1,447	1,375		-	-	-	-	-	-	-	-
	10000	3,493	3,118	2,087	1,656	1,538	1,447	1,375	1,315	1,220	1,149	1,091	-	-	-	-	-	-	-	-	-
	30000	3,118	2,162	1,447	1,149	1,066	1,003	953	912	846	796	756	-	-	-	-	-	-	-	-	-
	50000	2,629	1,823	1,220	969	899	846	804	769	714	672	638	-	-	-	-	-	-	-	-	-
	100000	2,087	1,447	969	769	714	672	638	610	567	533	506	-	-	-	-	-	-	-	-	-
2-215	5000	3,710	3,710	2,793	2,217	2,058	1,936	1,839	1,759	1,633	1,537	-	-	-	-	-	-	-	-	-	-
	10000	3,710	3,311	2,217	1,759	1,633	1,537	1,460	1,396	1,296	1,220	-	-	-	-	-	-	-	-	-	-
	30000	3,311	2,296	1,537	1,220	1,132	1,066	1,012	968	899	846	-	-	-	-	-	-	-	-	-	-
	50000	2,793	1,936	1,296	1,029	955	899	854	817	758	713	-	-	-	-	-	-	-	-	-	-
	100000	2,217	1,537	1,029	817	758	713	678	648	602	566	-	-	-	-	-	-	-	-	-	-
2-33	5000	4,353	4,353	3,277	2,601	2,415	2,272	2,158	2,064	1,916	1,803	-	-	-	-	-	-	-	-	-	-
	10000	4,353	3,885	2,601	2,064	1,916	1,803	1,713	1,639	1,521	1,431	-	-	-	-	-	-	-	-	-	-
	30000	3,885	2,694	1,803	1,431	1,329	1,250	1,188	1,136	1,055	992	-	-	-	-	-	-	-	-	-	-
	50000	3,277	2,272	1,521	1,207	1,121	1,055	1,002	958	890	837	-	-	-	-	-	-	-	-	-	-
	100000	2,601	1,803	1,207	958	890	837	795	761	706	664	-	-	-	-	-	-	-	-	-	-
2-37	5000	4,670	4,670	3,516	2,791	2,591	2,438	2,316	2,215	2,056	1,935	-	-	-	-	-	-	-	-	-	-
	10000	4,670	4,169	2,791	2,215	2,056	1,935	1,838	1,758	1,632	1,536	-	-	-	-	-	-	-	-	-	-
	30000	4,169	2,890	1,935	1,536	1,426	1,342	1,274	1,219	1,132	1,065	-	-	-	-	-	-	-	-	-	-
	50000	3,516	2,438	1,632	1,295	1,202	1,132	1,075	1,028	954	898	-	-	-	-	-	-	-	-	-	-
	100000	2,791	1,935	1,295	1,028	954	898	853	816	757	713	-	-	-	-	-	-	-	-	-	-
2-38	5000	5,392	5,392	4,059	3,222	2,991	2,814	2,673	2,557	2,374	-	-	-	-	-	-	-	-	-	-	-
	10000	5,392	4,812	3,222	2,557	2,374	2,234	2,122	2,029	1,884	-	-	-	-	-	-	-	-	-	-	-
	30000	4,812	3,337	2,234	1,773	1,646	1,549	1,471	1,407	1,306	-	-	-	-	-	-	-	-	-	-	-
	50000	4,059	2,814	1,884	1,495	1,388	1,306	1,241	1,187	1,102	-	-	-	-	-	-	-	-	-	-	-
	100000	3,222	2,234	1,495	1,187	1,102	1,037	985	942	874	-	-	-	-	-	-	-	-	-	-	-
2-43	5000	7,476	7,476	5,628	4,467	4,147	3,902	3,707	3,546	-	-	-	-	-	-	-	-	-	-	-	-
	10000	7,476	6,673	4,467	3,546	3,291	3,097	2,942	2,814	-	-	-	-	-	-	-	-	-	-	-	-
	30000	6,673	4,627	3,097	2,458	2,282	2,148	2,040	1,951	-	-	-	-	-	-	-	-	-	-	-	-
	50000	5,628	3,902	2,612	2,074	1,925	1,811	1,721	1,646	-	-	-	-	-	-	-	-	-	-	-	-
	100000	4,467	3,097	2,074	1,646	1,528	1,438	1,366	1,306	-	-	-	-	-	-	-	-	-	-	-	-
3-47	5000	9,371	9,371	7,054	5,599	5,198	4,891	4,646	-	-	-	-	-	-	-	-	-	-	-	-	-
	10000	9,371	8,364	5,599	4,444	4,125	3,882	3,688	-	-	-	-	-	-	-	-	-	-	-	-	-
	30000	8,364	5,799	3,882	3,081	2,860	2,692	2,557	-	-	-	-	-	-	-	-	-	-	-	-	-
	50000	7,054	4,891	3,274	2,599	2,413	2,270	2,157	-	-	-	-	-	-	-	-	-	-	-	-	-
	100000	5,599	3,882	2,599	2,063	1,915	1,802	1,712	-	-	-	-	-	-	-	-	-	-	-	-	-

See notes on top of page G-230.

How to Read the Table

Example A: For a 1" standard duty ball bearing operating at 1000 RPM and desired 100,000 hours L10 life, 154 Lbs is the maximum allowable radial load.

Example B: If 230 lbs of radial load is applied to a 1" standard duty shaft operating at 1000 RPM, the resulting L10 life is 30,000 hours.

Load and Speed continued

1. Table 7 displays the Browning 200 (VS-200) and 300 (VS-300) Series ball bearing load capacities for a given L10 life, speed and shaft size. For VB-200 and VE-200 use equivalent ratings for respective 200 series bore. For VB-300 use equivalent ratings for respective 300 series bore.

2. Values in Table 7 represent radial loads at ideal conditions with press fit mounting to the shaft. ABMA recommends de-rating of slip fit mounted bearings. Elevated operating temperatures can reduce the load capacity of bearing steel where a material de-rating is also recommended.

   a. For operating temperatures up to 200°F, divide the value in the load table by 1.3 to obtain the slip fit derated value.

   b. For units designed for operating temperatures 200°F to 400°F, divide the value in the load table by 1.5 to obtain the slip fit/elevated temperature de-rate value.

   c. Values in Table 7 represent equivalent radial loads only. For combined radial/thrust loads see page G-222.

3. The blue shaded area represents maximum recommended load for given operating speed based on load of 25% BDR. It is NOT recommended to exceed these loads in general industrial applications. See note on page G-222 for high load applications.

4. Areas designated by "-" exceed maximum value for standard bearings. See note on page G-223.

5. Consult Application Engineering for load and speed applications not covered in this table.

Table 7 - Load/Speed Chart – Browning 200 and 300 Series Ball Bearings

Series	L10 Hours	Revolutions Per Minute																			
		50	150	250	500	750	1000	1250	1500	1750	2000	2500	3000	3500	4000	4500	5000	5500	6000	6500	7500
L-10	5000	527	527	500	397	347	315	292	275	261	250	232	218	207	198	191	184	178	173	169	161
	10000	527	470	397	315	275	250	232	218	207	198	184	173	165	157	151	146	142	138	134	128
	30000	470	326	275	218	191	173	161	151	144	138	128	120	114	109	105	101	98	95	93	89
	50000	397	275	232	184	161	146	136	128	121	116	108	101	96	92	89	85	83	80	78	75
	100000	315	218	184	146	128	116	108	101	96	92	85	80	76	73	70	68	66	64	62	59
2-012	5000	652	652	619	491	429	390	362	341	324	310	287	270	257	246	236	228	221	215	209	-
	10000	652	583	491	390	341	310	287	270	257	246	228	215	204	195	188	181	175	170	166	-
	30000	583	404	341	270	236	215	199	188	178	170	158	149	141	135	130	126	122	118	115	-
	50000	491	341	287	228	199	181	168	158	150	144	133	126	119	114	110	106	103	100	97	-
	100000	390	270	228	181	158	144	133	126	119	114	106	100	95	91	87	84	81	79	77	-
2-015	5000	700	700	664	527	461	418	388	366	347	332	308	290	276	264	253	245	237	-	-	-
	10000	700	625	527	418	366	332	308	290	276	264	245	230	219	209	201	194	188	-	-	-
	30000	625	433	366	290	253	230	214	201	191	183	170	160	152	145	139	135	130	-	-	-
	50000	527	366	308	245	214	194	180	170	161	154	143	135	128	122	118	114	110	-	-	-
	100000	418	290	245	194	170	154	143	135	128	122	114	107	102	97	93	90	87	-	-	-
2-13	5000	1095	1095	1,039	825	720	654	608	572	543	519	482	454	431	412	396	-	-	-	-	-
	10000	1095	978	825	654	572	519	482	454	431	412	383	360	342	327	315	-	-	-	-	-
	30000	978	678	572	454	396	360	334	315	299	286	265	250	237	227	218	-	-	-	-	-
	50000	825	572	482	383	334	304	282	265	252	241	224	211	200	191	184	-	-	-	-	-
	100000	654	454	383	304	265	241	224	211	200	191	178	167	159	152	146	-	-	-	-	-
2-17	5000	1,446	1,446	1,371	1,088	951	864	802	755	717	686	636	599	569	544	-	-	-	-	-	-
	10000	1,446	1,290	1,088	864	755	686	636	599	569	544	505	475	452	432	-	-	-	-	-	-
	30000	1,290	895	755	599	523	475	441	415	394	377	350	330	313	299	-	-	-	-	-	-
	50000	1,088	755	636	505	441	401	372	350	333	318	295	278	264	253	-	-	-	-	-	-
	100000	864	599	505	401	350	318	295	278	264	253	234	221	210	200	-	-	-	-	-	-
2-19	5000	1835	1,835	1,741	1,381	1,207	1,096	1,018	958	910	870	808	760	722	-	-	-	-	-	-	-
	10000	1,835	1,638	1,381	1,096	958	870	808	760	722	691	641	603	573	-	-	-	-	-	-	-
	30000	1,638	1,136	958	760	664	603	560	527	501	479	445	418	397	-	-	-	-	-	-	-
	50000	1,381	958	808	641	560	509	472	445	422	404	375	353	335	-	-	-	-	-	-	-
	100000	1,096	760	641	509	445	404	375	353	335	321	298	280	266	-	-	-	-	-	-	-
2-111	5000	1,975	1,975	1,874	1,487	1,299	1,180	1,096	1,031	979	937	870	818	-	-	-	-	-	-	-	-
	10000	1,975	1,763	1,487	1,180	1,031	937	870	818	777	744	690	650	-	-	-	-	-	-	-	-
	30000	1,763	1,222	1,031	818	715	650	603	567	539	516	479	450	-	-	-	-	-	-	-	-
	50000	1,487	1,031	870	690	603	548	509	479	455	435	404	380	-	-	-	-	-	-	-	-
	100000	1,180	818	690	548	479	435	404	380	361	345	320	301	-	-	-	-	-	-	-	-
2-115	5000	1,972	1,972	1,871	1,485	1,297	1,178	1,094	1,029	978	935	868	817	-	-	-	-	-	-	-	-
	10000	1,972	1,760	1,485	1,178	1,029	935	868	817	776	742	689	649	-	-	-	-	-	-	-	-
	30000	1,760	1,221	1,029	817	714	649	602	567	538	515	478	450	-	-	-	-	-	-	-	-
	50000	1,485	1,029	868	689	602	547	508	478	454	434	403	379	-	-	-	-	-	-	-	-
	100000	1,178	817	689	547	478	434	403	379	360	345	320	301	-	-	-	-	-	-	-	-
2-23	5000	2,438	2,438	2,312	1,835	1,603	1,457	1,352	1,273	1,209	1,156	1,073	-	-	-	-	-	-	-	-	-
	10000	2,438	2,176	1,835	1,457	1,273	1,156	1,073	1,010	959	918	852	-	-	-	-	-	-	-	-	-
	30000	2,176	1,509	1,273	1,010	882	802	744	700	665	636	591	-	-	-	-	-	-	-	-	-
	50000	1,835	1,273	1,073	852	744	676	628	591	561	537	498	-	-	-	-	-	-	-	-	-
	100000	1,457	1,010	852	676	591	537	498	469	445	426	395	-	-	-	-	-	-	-	-	-
2-27	5000	2,947	2,947	2,795	2,219	1,938	1,761	1,635	1,538	1,461	1,398	1,298	-	-	-	-	-	-	-	-	-
	10000	2,947	2,631	2,219	1,761	1,538	1,398	1,298	1,221	1,160	1,109	1,030	-	-	-	-	-	-	-	-	-
	30000	2,631	1,824	1,538	1,221	1,067	969	900	847	804	769	714	-	-	-	-	-	-	-	-	-
	50000	2,219	1,538	1,298	1,030	900	817	759	714	678	649	602	-	-	-	-	-	-	-	-	-
	100000	1,761	1,221	1,030	817	714	649	602	567	538	515	478	-	-	-	-	-	-	-	-	-

Load and Speed continued

1. Table 8 displays the Browning 100 setscrew locking ball bearing (VS-100) load capacities for a given L10 life, speed and shaft size. For VE-100, RUBRE-100, RUBRS-100, SLS-100, LE-100, LR-100, LRS-100, LS-100 use equivalent ratings for respective 100 series bore.

2. Values in Table 8 represent radial loads at ideal conditions with press fit mounting to the shaft. ABMA recommends de-rating of slip fit mounted bearings. Elevated operating temperatures can reduce the load capacity of bearing steel where a material de-rating is also recommended.

a. For operating temperatures up to 200°F, divide the value in the load table by 1.3 to obtain the slip fit derated value.

b. For units designed for operating temperatures 200°F to 400°F, divide the value in the load table by 1.5 to obtain the slip fit/elevated temperature de-rate value.

c. Values in Table 8 represent equivalent radial loads only. For combined radial/thrust loads see page G-222.

3. The blue shaded area represents maximum recommended load for given operating speed based on load of 17% BDR. It is NOT recommended to exceed these loads in general industrial applications. See note on page G-222 for high load applications.

4. Areas designated by "-" exceed maximum value for standard bearings. See note on page G-223.

5. Consult Application Engineering for load and speed applications not covered in this table.

Table 8 - Load/Speed Chart – Browning 100 Series Ball Bearings

Series	L10 Hours	Revolutions Per Minute															
		50	150	250	500	750	1000	1250	1500	1750	2000	2500	3000	3500	4000	4500	5000
L-10	5000	351	351	351	351	347	315	292	275	261	250	232	218	207	198	191	184
	10000	351	351	351	315	275	250	232	218	207	198	184	173	165	157	151	146
	30000	351	326	275	218	191	173	161	151	144	138	128	120	114	109	105	101
	50000	351	275	232	184	161	146	136	128	121	116	108	101	96	92	89	85
	100000	315	218	184	146	128	116	108	101	96	92	85	80	76	73	70	68
2-012	5000	435	435	435	435	429	390	362	341	324	310	287	270	257	246	236	228
	10000	435	435	435	390	341	310	287	270	257	246	228	215	204	195	188	181
	30000	435	404	341	270	236	215	199	188	178	170	158	149	141	135	130	126
	50000	435	341	287	228	199	181	168	158	150	144	133	126	119	114	110	106
	100000	390	270	228	181	158	144	133	126	119	114	106	100	95	91	87	84
2-015	5000	466	466	466	466	461	418	388	366	347	332	308	290	276	-	-	-
	10000	466	466	466	418	366	332	308	290	276	264	245	230	219	-	-	-
	30000	466	433	366	290	253	230	214	201	191	183	170	160	152	-	-	-
	50000	466	366	308	245	214	194	180	170	161	154	143	135	128	-	-	-
	100000	418	290	245	194	170	154	143	135	128	122	114	107	102	-	-	-
2-13	5000	730	730	730	730	720	654	608	572	543	519	482	454	-	-	-	-
	10000	730	730	730	654	572	519	482	454	431	412	383	360	-	-	-	-
	30000	730	678	572	454	396	360	334	315	299	286	265	250	-	-	-	-
	50000	730	572	482	383	334	304	282	265	252	241	224	211	-	-	-	-
	100000	654	454	383	304	265	241	224	211	200	191	178	167	-	-	-	-
2-17	5000	963	963	963	963	951	864	802	755	717	686	636	-	-	-	-	-
	10000	963	963	963	864	755	686	636	599	569	544	505	-	-	-	-	-
	30000	963	895	755	599	523	475	441	415	394	377	350	-	-	-	-	-
	50000	963	755	636	505	441	401	372	350	333	318	295	-	-	-	-	-
	100000	864	599	505	401	350	318	295	278	264	253	234	-	-	-	-	-
2-19	5000	1,223	1,223	1,223	1,223	1,207	1,096	1,018	958	910	870	808	-	-	-	-	-
	10000	1,223	1,223	1,223	1,096	958	870	808	760	722	691	641	-	-	-	-	-
	30000	1,223	1,136	958	760	664	603	560	527	501	479	445	-	-	-	-	-
	50000	1,223	958	808	641	560	509	472	445	422	404	375	-	-	-	-	-
	100000	1,096	760	641	509	445	404	375	353	335	321	298	-	-	-	-	-
2-111	5000	1,316	1,316	1,316	1,316	1,299	1,180	1,096	1,031	979	937	-	-	-	-	-	-
	10000	1,316	1,316	1,316	1,180	1,031	937	870	818	777	744	-	-	-	-	-	-
	30000	1,316	1,222	1,031	818	715	650	603	567	539	516	-	-	-	-	-	-
	50000	1,316	1,031	870	690	603	548	509	479	455	435	-	-	-	-	-	-
	100000	1,180	818	690	548	479	435	404	380	361	345	-	-	-	-	-	-
2-115	5000	1,314	1,314	1,314	1,314	1,297	1,178	1,094	1,029	978	935	-	-	-	-	-	-
	10000	1,314	1,314	1,314	1,178	1,029	935	868	817	776	742	-	-	-	-	-	-
	30000	1,314	1,221	1,029	817	714	649	602	567	538	515	-	-	-	-	-	-
	50000	1,314	1,029	868	689	602	547	508	478	454	434	-	-	-	-	-	-
	100000	1,178	817	689	547	478	434	403	379	360	345	-	-	-	-	-	-
2-23	5000	1,625	1,625	1,625	1,625	1,603	1,457	1,352	1,273	1,209	-	-	-	-	-	-	-
	10000	1,625	1,625	1,625	1,457	1,273	1,156	1,073	1,010	959	-	-	-	-	-	-	-
	30000	1,625	1,509	1,273	1,010	882	802	744	700	665	-	-	-	-	-	-	-
	50000	1,625	1,273	1,073	852	744	676	628	591	561	-	-	-	-	-	-	-
	100000	1,457	1,010	852	676	591	537	498	469	445	-	-	-	-	-	-	-

How to Read the Table
Example A: For a 1" standard duty ball bearing operating at 1000 RPM and desired 100,000 hours L10 life, 154 Lbs is the maximum allowable radial load.
Example B: If 230 lbs of radial load is applied to a 1" standard duty shaft operating at 1000 RPM, the resulting L10 life is 30,000 hours.

Mounted Ball Bearing Engineering see page G-220.

For more information on bearing capabilities outside of our standard offering, please contact Application Engineering (800) 626-2093.

Ball Bearing Maximum Speed Rating Tables

Tables 9-13 display the maximum speed rating for various ball bearing seals and locking devices. Values in the table represent speeds at ideal conditions. Other application factors may reduce the speed rating of a bearing.

Table 9 – Sealmaster Gold Standard Duty Maximum Speed Rating

Standard Duty and ER Bearings					Locking	MAX SEAL SPEED REVOLUTIONS PER MINUTE									
						Standard Sealmaster Gold									
						Setscrew	Skwezloc Locking Collar or Double Setscrew	Setscrew, Skwezloc Locking Collar and Double Setscrew							
					Suffix	Standard, A, AS, X		C	2C	3C	F	SF	U, BF	VA, VS	H
Series	Bore Diameter inch	Bore Diameter mm	Standard Duty Insert	ER		Standard Felt Backed off Felt (AS) Nomex (A) No Felt (X)		Contact	Double Contact Seal (Progard)	Triple Contact Seal (Safegard)	High Temp Contact Seal - Fiberglass (Heatgard)	High Temp Double Contact Seal - Fiberglass (Heatgard Plus)	Spring Seal (UltaGard)	High Temp Spring Seal (HeatGard Ultra)	High Performance Seal
2-012	1/2	-	2-08	ER-8		7300	10200	6450	1600	N/A	1600	N/A	2800	N/A	3100
	9/16	-	2-09	ER-9											
	5/8	-	2-010	ER-10											
	11/16	-	2-011	ER-11											
	3/4	-	2-012	ER-12											
	-	20	5204	ER-204											
2-015	13/16	-	2-013	ER-13		6350	9000	6350	N/A	550	1400	N/A	2500	2500	2700
	7/8	-	2-014	ER-14											
	15/16	-	2-015	ER-15											
	-	25	5205	ER-205											
	1	-	2-1	ER-16											
2-13	1 1/16	-	2-11	ER-17		5450	7600	5450	N/A	500	1050	500	2200	2200	2300
	1 1/8	-	2-12	ER-18											
	-	30	5206	ER-206											
	1 3/6	-	2-13	ER-19											
	1 1/4	-	1-14	ER-20R											
2-17	1 1/4	-	2-14	ER-20		4650	6500	4650	N/A	450	1000	450	N/A	1900	2000
	1 5/16	-	2-15	ER-21											
	1 3/8	-	2-16	ER-22											
	-	35	5207	ER-207											
	1 7/16	-	2-17	ER-23											
2-19	1 1/2	-	2-18	ER-24		4150	5850	4150	N/A	400	925	400	N/A	1700	1750
	1 9/16	-	2-19	ER-25											
	-	40	5208	ER-208											
2-111	1 5/8	-	2-110	ER-26		3800	5300	3800	N/A	350	850	350	N/A	1500	1600
	1 11/16	-	2-111	ER-27											
	1 3/4	-	2-112	ER-28											
	-	45	5209	ER-209											

If seal max speed in this chart exceeds bearing max speed from rating tables or speed that is deemed acceptable for the application, lowest applicable speed applies.

MAX SEAL SPEED REVOLUTIONS PER MINUTE													
Custom Select Suffix													
Setscrew, Skwezloc Locking Collar and Double Setscrew				Setscrew	Skwezloc Locking Collar or Double Setscrew	Skwezloc Locking Collar	All	Locking	Standard Duty and ER Bearings				
HT, HTA, HI	HTC	LO	XLO	CXU		HS	DRT	Suffix					
High Temperature Options		Low Drag Options		Air Handling		High Speed	High Contamination		Bore Diameter		Standard Duty	ER	Series
									inch	mm	Insert		
3200	800	5800	2900	7300	10200	11700	1600		1/2	-	2-08	ER-8	2-012
									9/16	-	2-09	ER-9	
									5/8	-	2-010	ER-10	
									11/16	-	2-011	ER-11	
									3/4	-	2-012	ER-12	
									-	20	5204	ER-204	
2750	800	5000	2500	6350	9000	10200	550		13/16	-	2-013	ER-13	2-015
									7/8	-	2-014	ER-14	
									15/16	-	2-015	ER-15	
									-	25	5205	ER-205	
									1	-	2-1	ER-16	
2400	700	4300	2150	5450	7600	8700	500		1 1/16	-	2-11	ER-17	2-13
									1 1/8	-	2-12	ER-18	
									-	30	5206	ER-206	
									1 3/6	-	2-13	ER-19	
									1 1/4	-	1-14	ER-20R	
2200	600	3700	1850	4650	6500	7450	450		1 1/4	-	2-14	ER-20	2-17
									1 5/16	-	2-15	ER-21	
									1 3/8	-	2-16	ER-22	
									-	35	5207	ER-207	
									1 7/16	-	2-17	ER-23	
1800	500	3300	1650	4150	5850	6700	400		1 1/2	-	2-18	ER-24	2-19
									1 9/16	-	2-19	ER-25	
									-	40	5208	ER-208	
1650	500	3000	1500	3800	5300	6050	350		1 5/8	-	2-110	ER-26	2-111
									1 11/16	-	2-111	ER-27	
									1 3/4	-	2-112	ER-28	
									-	45	5209	ER-209	

Table 9 – Sealmaster Gold Standard Duty Maximum Speed Rating continued

Standard Duty and ER Bearings					Locking	MAX SEAL SPEED REVOLUTIONS PER MINUTE									
						Standard Sealmaster Gold									
						Setscrew	Skwezloc Locking Collar or Double Setscrew	Setscrew, Skwezloc Locking Collar and Double Setscrew							
					Suffix	Standard, A, AS, X		C	2C	3C	F	SF	U, BF	VA, VS	H
Series	Bore Diameter inch	Bore Diameter mm	Standard Duty Insert	ER		Standard Felt Backed off Felt (AS) Nomex (A) No Felt (X)		Contact	Double Contact Seal (Progard)	Triple Contact Seal (Safegard)	High Temp Contact Seal - Fiberglass (Heatgard)	High Temp Double Contact Seal - Fiberglass (Heatgard Plus)	Spring Seal (UltaGard)	High Temp Spring Seal (HeatGard Ultra)	High Performance Seal
2-115	1 13/16	-	2-113	ER-29		3550	5000	3550	N/A	325	775	325	1400	N/A	1500
	1 7/8	-	2-114	ER-30											
	1 15/16	-	2-115	ER-31											
	-	50	5210	ER-210											
	2	-	1-2	ER-32R											
2-23	2	-	2-2	ER-32		3250	4500	3250	700	300	700	300	1300	N/A	1350
	2 1/8	-	2-22	ER-34											
	-	55	5211	ER-211											
	2 3/16	-	2-23	ER-35											
2-27	2 1/4	-	2-24	ER-36		3000	4100	2550	650	N/A	650	250	1200	N/A	1250
	-	60	5212	ER-212											
	2 3/8	-	2-26	ER-38											
	2 7/16	-	2-27	ER-39											
2-211	2 1/2	-	-	ER-40		2500	3600	2225	550	N/A	550	225	N/A	N/A	1050
	2 11/16	-	2-211	ER-43											
	-	70	5214	ER-214											
2-215*	2 7/8	-	2-214	ER-46		2450	3400	2100	525	N/A	525	200	N/A	N/A	2500*
	2 15/16	-	2-215	ER-47											
	-	75	5215	ER-215											
2-33	3	-	-	ER-48		2250	3150	1950	500	N/A	500	N/A	N/A	N/A	N/A
	-	80	5216	ER-216											
	3 3/16	-	2-33	ER-51											
2-37	3 1/4	-	2-34	ER-52		2125	3000	1850	450	N/A	450	N/A	N/A	N/A	N/A
	3 3/8	-	2-36	ER-54											
	3 7/16	-	2-37	ER-55											
2-38	3 1/2		2-38	-		2000	2800	1725	425	N/A	425	N/A	N/A	N/A	N/A
	-	90	5218	-											
2-43	3 15/16		-	ER-63		1700	2400	1450	375	N/A	375	N/A	N/A	N/A	N/A
	-	100	-												
	4		-	ER-64											

If seal max speed in this chart exceeds bearing max speed from rating tables or speed that is deemed acceptable for the application, lowest applicable speed applies.

*2-215 series uses a double lip seal vs. our triple lip high performance seal (HPS).

MAX SEAL SPEED REVOLUTIONS PER MINUTE													
Custom Select Suffix													
Setscrew, Skwezloc Locking Collar and Double Setscrew				Setscrew	Skwezloc Locking Collar or Double Setscrew	Skwezloc Locking Collar	All	Locking	Standard Duty and ER Bearings				
HT, HTA, HI	HTC	LO	XLO	CXU		HS	DRT	Suffix					
High Temperature Options		Low Drag Options		Air Handling		High Speed	High Contamination		Bore Diameter		Standard Duty	ER	Series
									inch	mm	Insert		
1550	400	2800	1400	3550	5000	5700	325		1 13/16	-	2-113	ER-29	2-115
									1 7/8	-	2-114	ER-30	
									1 15/16	-	2-115	ER-31	
									-	50	5210	ER-210	
									2	-	1-2	ER-32R	
1400	350	2500	1250	3250	4500	5150	300		2	-	2-2	ER-32	2-23
									2 1/8	-	2-22	ER-34	
									-	55	5211	ER-211	
									2 3/16	-	2-23	ER-35	
1250	325	2300	1150	3000	4100	4700	650		2 1/4	-	2-24	ER-36	2-27
									-	60	5212	ER-212	
									2 3/8	-	2-26	ER-38	
									2 7/16	-	2-27	ER-39	
1100	275	2000	1000	2500	3600	N/A	550		2 1/2	-	-	ER-40	2-211
									2 11/16	-	2-211	ER-43	
									-	70	5214	ER-214	
1050	250	1900	950	2450	3400	N/A	525		2 7/8	-	2-214	ER-46	2-215
									2 15/16	-	2-215	ER-47	
									-	75	5215	ER-215	
950	250	1750	900	2250	3150	N/A	500		3	-	-	ER-48	2-33
									-	80	5216	ER-216	
									3 3/16	-	2-33	ER-51	
900	225	1650	800	2125	3000	N/A	450		3 1/4	-	2-34	ER-52	2-37
									3 3/8	-	2-36	ER-54	
									3 7/16	-	2-37	ER-55	
850	200	1550	750	2000	2800	N/A	425		3 1/2	-	2-38	-	2-38
									-	90	5218	-	
700	200	1300	650	1700	2400	N/A	375		3 15/16	-	-	ER-63	2-43
									-	100	-		
									4	-	-	ER-64	

Table 10 – Sealmaster Gold Medium Duty Maximum Speed

Medium Duty					MAX SEAL SPEED REVOLUTIONS PER MINUTE								
					Standard Sealmaster Gold								
				Locking	Setscrew	Skwezloc Locking Collar or Double Setscrew	Setscrew, Skwezloc Locking Collar and Double Setscrew						
				Suffix	Standard, AS, X		C	2C	3C	SF	U, BF	VA, VS	H
Series	Bore Diameter inch	Bore Diameter mm	Unit Size	Insert	Standard Felt Backed off Felt (AS) Nomex (A) No Felt (X)		Contact	Double Contact Seal (Progard)	Triple Contact Seal (Safegard)	High Temp Double Contact Seal - Fiberglass (Heatgard Plus)	Spring Seal (UltaGard)	FKM Spring Seal (HeatGard Ultra)	High Performance Seal
2-13	15/16	-	15	3-015	5450	7600	5450	N/A	500	500	2200	2200	2300
	-	25	305	5305									
	1	-	16	3-1									
2-17	-	30	306	5306	4650	6500	4650	N/A	450	450	N/A	1900	2000
	1 3/16	-	19	3-13									
2-19	-	35	307	5307	4150	5850	4150	N/A	400	400	N/A	1700	1750
	1 7/16	-	23	3-17									
2-111	1 1/2	-	24	3-18	3800	5300	3800	N/A	350	350	N/A	1500	1600
	-	40	308	5308									
2-115	1 11/16	-	27	3-111	3550	5000	3550	N/A	325	325	1400	N/A	1500
	1 3/4	-	28	3-112									
	-	45	309	5309									
2-23	1 15/16	-	31	3-115	3250	4500	3250	700	300	300	1300	N/A	1350
	-	50	310	5310									
2-27	-	55	311	5311	3000	4100	2550	650	N/A	250	1200	N/A	1250
	2 3/16	-	35	3-23									
2-211	2 7/16	-	39	3-27	2500	3600	2250	550	N/A	225	N/A	N/A	1050
	2 1/2	-	40	3-28									
	-	65	313	5313									
2-215	2 11/16	-	43	3-211	2450	3400	2100	525	N/A	200	N/A	N/A	2500*
	-	70	314	5314									
2-33	2 15/16	-	47	3-215	2250	3150	1950	500	N/A	N/A	N/A	N/A	N/A
	-	75	315	5315									
	3	-	48	3-3									
2-37	-	80	316	5316	2125	3000	1850	450	N/A	N/A	N/A	N/A	N/A
	3 3/16	-	51	3-33									
2-38	3 7/16	-	55	3-37	2000	2800	1725	425	N/A	N/A	N/A	N/A	N/A
2-43	3 15/16	-	63	3-315	1700	2400	1450	375	N/A	N/A	N/A	N/A	N/A
	-	100	320	5320									
	4	-	64	3-4									
3-47	4 7/16	-	71	3-47	1375	1950	N/A	N/A	N/A	N/A	N/A	N/A	N/A
	4 15/16	-	79	3-415									

If seal max speed in this chart exceeds bearing max speed from rating tables or speed that is deemed acceptable for the application, lowest applicable speed applies.

MAX SEAL SPEED REVOLUTIONS PER MINUTE												
Custom Select Suffix												
Setscrew, Skwezloc Locking Collar and Double Setscrew				Setscrew	Skwezloc Locking Collar or Double Setscrew	Skwezloc Locking Collar	All	Medium Duty			Locking	Series
HT, HTA, HI	HTC	LO	XLO	CXU		HS	DRT				Suffix	
High Temperature Options		Low Drag		Air Handling		High Speed	High Contamination	Bore Diameter inch	Bore Diameter mm	Unit Size	Insert	
2400	400	4300	2150	5450	7600	8700	500	15/16	-	15	3-015	2-13
								-	25	305	5305	
								1	-	16	3-1	
2200	350	3700	1850	4650	6500	7450	450	-	30	306	5306	2-17
								1 3/16	-	19	3-13	
1800	350	3300	1650	4150	5850	6700	400	-	35	307	5307	2-19
								1 7/16	-	23	3-17	
1650	350	3000	1500	3800	5300	6050	350	1 1/2	-	24	3-18	2-111
								-	40	308	5308	
1550	350	2800	1400	3550	5000	5700	325	1 11/16	-	27	3-111	2-115
								1 3/4	-	28	3-112	
								-	45	309	5309	
1400	350	2500	1250	3250	4500	5150	300	1 15/16	-	31	3-115	2-23
								-	50	310	5310	
1250	325	2300	1150	3000	4100	4700	650	-	55	311	5311	2-27
								2 3/16	-	35	3-23	
1100	275	2000	1000	2500	3600	N/A	550	2 7/16	-	39	3-27	2-211
								2 1/2	-	40	3-28	
								-	65	313	5313	
1050	250	1900	950	2450	3400	N/A	525	2 11/16	-	43	3-211	2-215
								-	70	314	5314	
950	250	1750	900	2250	3150	N/A	500	2 15/16	-	47	3-215	2-33
								-	75	315	5315	
								3	-	48	3-3	
900	225	1650	800	2125	3000	N/A	450	-	80	316	5316	2-37
								3 3/16	-	51	3-33	
850	200	1550	750	2000	2800	N/A	425	3 7/16	-	55	3-37	2-38
700	200	1300	650	1700	2400	N/A	375	3 15/16	-	63	3-315	2-43
								-	100	320	5320	
								4	-	64	3-4	
600	N/A	1050	525	1375	1950	N/A	N/A	4 7/16	-	71	3-47	3-47
								4 15/16	-	79	3-415	

Table 11 – Sealmaster Material Handling Bearing Maximum Speed Rating

Series	Bore Diameter		Unit Size	Insert		Max. Seal Speed Revolutions Per Minute
	inch	mm		Setscrew	Skwezloc Locking Collar	
2-012	3/4	-	12	MH-12	MH-12T	6500
	-	20	204	MH-204	MH-204T	
2-015	-	25	205	MH-205	MH-205T	5500
	1	-	16	MH-16	MH-16T	
2-13	-	30	206	MH-206	MH-206T	4500
	1 3/6	-	19	MH-19	MH-19T	
	1 1/4S	-	20S	MH-20R	MH-20RT	
2-17	1 1/4	-	20	MH-20	MH-20T	4000
	1 7/16	-	23	MH-23	MH-23T	
2-19	1 1/2	-	24	MH-24	MH-24T	3500
2-111	1 11/16	-	27	MH-27	MH-27T	3000
2-115	1 15/16	-	31	MH-31	MH-31T	3000
	-	50	210	MH-210	MH-210T	
2-23	2	-	32	MH-32	MH-32T	2500
	2 3/16	-	35	MH-35	MH-35T	
2-27	2 7/16	-	39	MH-39	MH-39T	2500

Table 12 – Browning 100 and 200 Maximum Speed Rating

Series	100 Series, 200 Series and VER Bearings					Max. Seal Speed Revolutions Per Minute		
	Bore Diameter		100 Series	200 Series	VER	100 Series	200 Series	VER
	inch	mm	Insert	Insert		Contact	Contact + Flinger	Contact + Flinger
L-10	1/2	-	VS-108	VS-208	-	5000	7500	-
2-012			-	-	VER-208	-	-	6500
L-10	5/8	-	VS-110	VS-210	-	5000	7500	-
2-012			-	-	VER-210	-	-	6500
2-012	3/4	-	VS-112	VS-212	VER-212	4000	6500	6500
	-	20	-	VS-20 MM	-			
2-015	7/8	-	VS-114	VS-214	VER-214	3500	5500	5500
	15/16	-	VS-115	VS-215	VER-215			
	-	25	-	VS-25 MM	-			
	1	-	VS-116	VS-216	VER-216			
2-13	1 1/16	-	-	-	VER-217	3000	4500	4500
	1 1/8	-	VS-118	VS-218	VER-218			
	-	30	-	VS-30 MM	-			
	1 3/6	-	VS-119	VS-219	VER-219			
	1 1/4	-	VS-120S	VS-220S	VER-220S			
2-17	1 1/4	-	VS-120	VS-220	VER-220	2500	4000	4000
	1 3/8	-	VS-122	VS-222	VER-222			
	-	35	-	VS-35 MM	-			
	1 7/16	-	VS-123	VS-223	VER-223			
2-19	1 1/2	-	VS-124	VS-224	VER-224	2500	3500	3500
	1 9/16	-	-	-	VER-225			
	-	40	-	VS-40 MM	-			
2-111	1 5/8	-	-	VS-226	VER-226	2000	3000	3000
	1 11/16	-	VS-127	VS-227	VER-227			
	1 3/4	-	VS-128	VS-228	VER-228			
	-	45	-	VS-45 MM	-			
2-115	1 7/8	-	-	-	VER-230	2000	3000	3000
	1 15/16	-	VS-131	VS-231	VER-231			
	-	50	-	VS-50 MM	-			
	2	-	VS-132S	VS-232S	VER-232S			
2-23	2	-	VS-132	VS-232	VER-232	1750	2500	2500
	-	55	-	VS-55 MM	-			
	2 3/16	-	VS-135	VS-235	VER-235			
2-27	2 1/4	-	-	VS-236	VER-236	-	2500	2500
	2 3/8	-	-	-	VER-238			
	2 7/16	-	-	VS-239	VER-239			

Setscrew locking 100, 200, 300 series and VER's shown.
For VE-100, RUBRE-100, RUBRS-100, SLS-100, LE-100, LR-100, LRS-100, LS-100 use equivalent limits respective 100 series bore.
For VB-200, VE-200 equivalent limits for respective 200 series bore.

Table 13 – Browning 300 Maximum Speed Rating

300 Series Bearing			Max. Seal Speed Revolutions Per Minute
Bore Diameter		300 Series	300 Series
inch	mm	Insert	Contact + Flinger
1	25.4	VS-316	4500
1 3/16	30.2	VS-319	4000
1 1/4	31.8	VS-220	
1 7/16	36.5	VS-323	3500
1 1/2	38.1	VS-324	3000
1 11/16	42.9	VS-327	
1 3/4	44.5	VS-328	
1 15/16	49.2	VS-331	2500
2 3/16	55.6	VS-335	

For VB-300 equivalent limits for respective 300 series bore.

Lock Types

"Slip Fit" Mounting

Mounted Ball Bearings are designed to slip fit onto the shaft. Slip fit means that the shaft is usually slightly smaller, and the inner ring bore is slightly larger than the nominal shaft sizes listed in the bearing tables. Slip fit mounting is very popular and economical as it does not require specialized equipment or tooling to mount the bearing on the shaft. Reliability of the lock is still dependent on the proper mounting techniques and proper shaft size control.

Shaft Locking System Selection

Selection of the shaft locking system may be dependent on some or all of the following application criteria:

- Lock Reliability
- Shaft Run-Out
- Vibrating Systems
- Vibration Reduction (Isolation Devices)
- Shaft Fretting
- Distress On The Shaft Surface
- Shafting Material
- Space On The Shaft
- Shaft Orientation (Vertical, Horizontal)
- Ease Of Installation

Single Sided (Single Lock) Setscrew Locking System

Single sided setscrew lock has an extended inner ring on one side of the bearing. This locking system is held to the shaft by two setscrews. Single lock is the most popular bearing mounting method for Mounted Ball Bearings. It is easy to mount because it requires tightening only two setscrews and takes up minimal space along the shaft. Sealmaster and Browning Mounted Ball Bearings have a unique package of features including: wide inner ring design, zone hardened inner rings, specially designed setscrews and 120° setscrew position. These features are unmatched in the mounted bearing industry and are designed to maximize lock reliability.

Single lock setscrew design is specified in a wide range of applications for moderate loads and speeds. This lock is sometimes specified in flange block and cartridge housings because of inaccessibility of back side setscrews. Upset setscrew marks on the shaft can be minimized for removal of the bearing by removing the setscrews and using a flat punch, tapping the upset shaft material flat onto the shaft. For high speed, heavy load (radial or thrust), vibration, eccentric loading, stainless steel or hollow shafting, reduction of fretting, vibration or marking of the shafting, review alternate locks below or consult Application Engineering.

Double Sided (Double Lock) Setscrew Locking System

Double sided setscrew lock is extended on both sides of the inner ring. The inner race is locked to the shaft by four screws. This design is the preferred lock for the heavy duty Sealmaster Gold Mounted Ball Bearings with double lock incorporate the same unique package of locking features included in the single lock design: wide inner ring design, zone hardened inner rings, specially designed setscrews, and 120° setscrew position.

The double lock design is specified for demanding applications or where shaft lock reliability is critical. This design is often specified on high load applications, high thrust load applications, vertical shafts where extra holding power is required, eccentric drive applications, high vibration applications, and high speed applications. It also helps to reduce fretting corrosion on the shaft. Upset setscrew marks on the shaft can be minimized for removal of the bearing by removing the setscrews and, using a flat punch, tapping the upset shaft material flat onto the shaft. For stainless steel shafting, or where vibration reduction is required, refer to Skwezloc® or BOA Concentric locking collar below or consult Application Engineering.

Eccentric Locking

Eccentric locking design incorporates a precision eccentric collar that mates with the inner ring extension for shaft hold. The inner ring is extended and has an eccentric profile machined on the outer diameter at the end. The inner diameter of the collar has an eccentric profile machined that mates with the inner ring extension. The eccentric collar is placed on the inner ring extension and rotated in the direction of shaft rotation. This rotation forces the collar and inner ring eccentric profiles to lock by creating a friction grip. The collar makes contact with the shaft and a setscrew on the collar is then tightened to lock the collar in place. This design is available on Browning Mounted Ball Bearings only.

Note: The eccentric is designed for single direction of rotation and should not be used when two direction rotation is present.

Lock Types continued

The Concentric Locking System

Sealmaster Skwezloc® and Browning BOA concentric locking system for ball bearings has an inner ring extension which is slit into 6 tangs. The split concentric collar is tightened over the inner ring extension, gripping the bearing to the shaft. The concentric design friction grips to the shaft with 360° of holding.

- Centers the shaft in the bore of the bearing, reducing vibration and shaft runout.
- Maintains manufactured ball path roundness reducing vibration and enhances bearing life.
- Excellent for high speed applications
- Does not mark the shaft like set screw or eccentric lock.
- Is easy to install, requiring tightening only one Torx head capscrew.

Concentric is often specified in air handling, HVAC, fan and blower applications where noise and vibration reduction is essential. High speed applications such as saws and routers or high speed spindles are common applications for concentric locking. Coating roll and sanding applications are also good applications for the concentric where runout control of the rotating system is essential. Concentric is recommended for stainless steel or hardened shafting. In vertical shaft or high thrust load applications, a thrust collar or axial locating device is required to insure safety of the friction grip lock.

Shaft Lock Comparison				
Characteristic	**Single Lock**	**Double Lock**	**Concentric**	**Eccentric**
High Speeds	✓✓	✓✓✓	✓✓✓✓	✓✓
Heavy Loads	✓✓	✓✓✓✓	✓✓✓✓	✓
Radial Loads	✓✓✓✓	✓✓✓✓	✓✓✓✓	✓✓✓✓
Thrust Loads	✓✓✓	✓✓✓✓	✓✓✷	✓✷
Fretting Control	✓✓	✓✓✓	✓✓✓✓	✓✓
Run out Control	✓✓	✓✓	✓✓✓✓	✓✓
Reliability of Lock	✓✓✓	✓✓✓✓	✓✓✓✓	✓✓
Vertical Shaft	✓✓✓	✓✓✓✓	✓✓✷	✓✷
Eccentric Loads	✓✓	✓✓✓✓	✓✓✓	✓
Hardened/Stainless Shafts	✓✓	✓✓✓	✓✓✓✓✓	✓✓

Legend: Excellent ✓✓✓✓, Good ✓✓✓, Fair ✓✓, Poor ✓
✷ Review use of thrust device.

Note: Premium locking systems are not intended to be a fix for worn, damaged or undersized shafting or poor mounting practices. Consult Installation Instructions for proper installation.

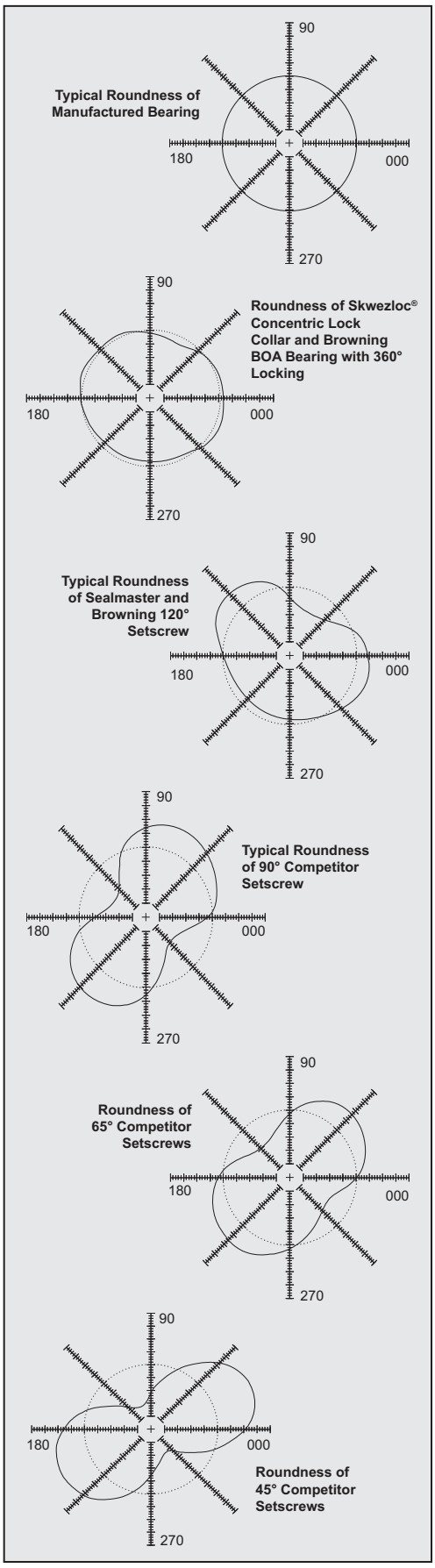

Sealmaster Gold Mounted Ball Bearing Housed Units Installation

NOTICE

• These bearings are designed for maximum permissible static misalignment of ± 2 degrees. Installation, handling or operation of the bearing in excess of the maximum of ± 2 degrees can cause reduction in bearing performance and may lead to equipment failure.

• Do not strike or hammer on any component of the bearing and/or shaft. Impact can result in damage to the bearing that may cause reduction in bearing performance and may lead to equipment failure.

Step 1: Inspect Shaft and Bore

Shaft should be within tolerance range shown in table, clean and free of nicks and burrs. Mount bearings on unused section of shafting or repair/replace shafting as required. Inspect both the shaft and bearing bore for debris or contaminants. Wipe clean as necessary.

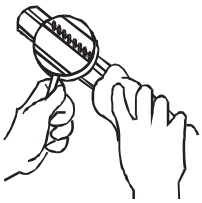

SM Gold Table 1

Recommended Shaft Tolerances	
Nominal Bore Diameter	Tolerance (inch)
1/2 - 1 15/16	+0.0000 / -0.0005
2 - 3 3/16	+0.0000 / -0.0010
3 1/4 - 4 15/16	+0.0000 / -0.0015

Step 2: Check Support Surfaces

Make sure the base of the housing and the support surfaces are clean and free from burrs. If the housing elevation is adjusted with shims these must cover the entire contact area between the housing and the support surface.

Step 3: Install Unit

To aid installation, keep weight off bearing during mounting. Slide unit onto shaft by pushing on the inner ring. If it is difficult to mount bearing on shaft, use a piece of emery cloth to reduce any high spots on the shaft.

Step 4: Fasten Unit in Place

Install housing mounting bolts and check bearing alignment. Align the bearing units as closely as possible. Tighten mounting bolts to recommended fastener torques. Check the shaft for freedom of rotation by rotating shaft with hand in both directions.

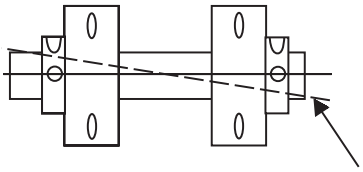

Step 5: Position Insert

If expansion units are used, the insert must be located in the housing to allow for axial shaft expansion and/or contraction. Position bearing insert to obtain the required axial expansion in desired directions. It may be necessary to unload the bearing while moving the assembly.

Sealmaster Gold Mounted Ball Bearing Housed Units Installation continued

Step 6: Tighten Locking Mechanism

a. Setscrew Locking Inserts

Setscrews in multiple bearing applications should be aligned as shown.

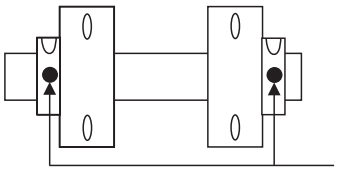

Tighten bearing units to the shaft as follows:

i. Torque the first setscrew "A" to one half of the recommended torque in Table 2.

ii. Torque the second setscrew "B" to the full recom mended torque. Go back to the first setscrew "A" and tighten to the full recommended torque.

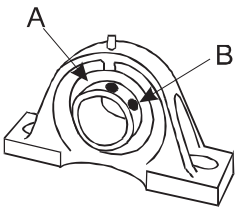

If the bearing unit has setscrew locking on both sides of the inner ring (Double Lock Setscrew), repeat the same procedure for the second pair of setscrews. Check shaft again for freedom of rotation and then tighten the second bearing unit in the same fashion. When all bearings are tightened, perform a final check to the shaft for freedom of rotation.

SM Gold Table 2

Setscrew Torque		
Screw Size	Hex Size	Inch-Pounds
1/4-28	1/8	65 - 85
5/16-24	5/32	125 - 165
3/8-24	3/16	230 - 300
7/16-20	7/32	350 - 450
1/2-20	1/4	500 - 650
5/8-18	5/16	1100 - 1440

b. Skwezloc Locking Inserts

i. Be sure that the Skwezloc collar is fitted square and snug against the shoulder on the inner ring as shown.

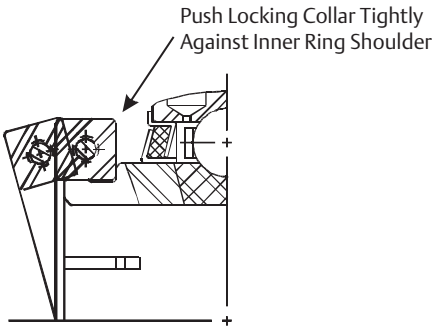

ii. Torque the Skwezloc collar cap screw to the full recommended torque in Table 3.

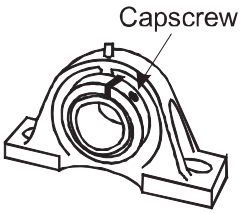

SM Gold Table 3

Skwezloc Concentric Locking Collar Cap Screw Torque		
Screw Size	Torx Size	Inch-Pounds
# 8-32	T-25	70
# 10-24	T-27	100
1/4-20	T-30	240
5/16-18	T-45	495

Check shaft again for freedom of rotation and then tighten the second bearing unit in the same fashion. When all bearings are tightened, perform a final check to the shaft for freedom of rotation.

Mounting Sealmaster Gold Cylindrical O.D. (ER Style) Inserts and Cylindrical O.D. Housings (AR & SC Style):

NOTICE

• Do not strike or hammer on any component of the bearing and/or shaft. Impact can result in damage to the bearing that may cause reduction in bearing performance and may lead to equipment failure.

Step 1: Inspect and Prepare Housing

To achieve proper bearing fit, the housing should be machined to the correct bore size. For recommended housing bore sizes, refer to page G-259. The housing bearing seat should be wiped clean and free of debris.

Step 2: Install Unit in Housing

Press bearing into housing by applying force to the face of the housing, or the face of the outer ring for ER style bearings.

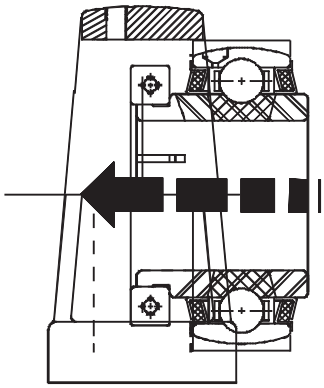

Do not hammer on any component of the bearing or apply force to the inner ring.

Step 3: Refer to Steps 1 - 6 from the "Mounting Housed Bearing Units" Section Pages G-246 to G-247

Sealmaster Gold Expansion Bearings:

Expansion bearings allow for linear shaft expansion or contraction caused by temperature variations. Without this expansion capability, bearings may be subjected to excessive thrust loads and misalignment which could damage the bearing, mounting surfaces, and frameworks. Sealmaster offers two types of expansion (float) bearings:

1. In Sealmaster Gold mounted units where the bearing is installed into an AR ring then into a housing assembly as shown on page G-29. This design allows the bearing to move axially in the housing assembly. Table 4 below shows the allowable expansion by size.

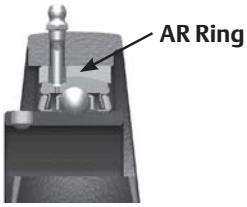

SM Gold Table 4

Bore Diameter		Expansion (inch)
Standard Duty	Medium Duty	
1/2 - 1	N/A	3/32
1 3/16 - 1 3/4	15/16 - 1 1/2	1/8
1 15/16 - 2 15/16	1 11/16 - 2 11/16	3/16
3 - 3 7/16	2 15/16 - 3 3/16	1/4
3 1/2 - 4	3 7/16 - 4	9/32
5	4 7/16 - 4 15/16	7/16

2. In Sealmaster Cylindrical O.D. bearings (ER style) and some Sealmaster Gold mounted units expansion is achieved by utilizing a special half-dog & wire and keyway in the shaft by specifying a "HIY" suffix. The bearing then floats along the shaft. Table 5 shows the shaft slot dimensions required.

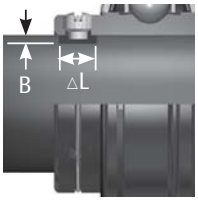

SM Gold Table 5

Bore Sizes	Slot Width (C)	Min. Slot Depth (B)	1/2 Dog Point Dia. (P)
inch	inch	inch	inch
1/2 to 1/4R	13/64	3/32	5/32
1 1/4 to 1 3/4	9/32	3/32	13/64
1 7/8 to 2 7/16	21/64	1/8	1/4
2 /12 to 3 7/16	21/64	1/8	19/64
3 15/16 to 4	33/64	3/16	15/32

△L is calculated below

Notes:

- Before installation, make certain proper expansion is accounted for. Expansion units should be placed in a location where relative movement between the bearing insert and the housing can be tolerated.
- When using an expansion bearing, always use a fixed bearing as the second support bearing.
- Half-dog setscrew and lock wire systems are not recommended for high speed or vibration applications. Application Engineering can be contacted for specifics. Only one half-dog setscrew should be used in this arrangement. No other setscrew should be installed. The half-dog setscrew's nub is engaged within the shaft slot, but not tightened into the shaft.

When shafting is heated, it grows longer. This growth in shaft length is particularly problematic when shafts are long and temperature differentials are large.

The difference in linear expansion between the shaft (shaft length between bearing centers) and the bearing mounting structure must be taken in consideration in high temperature applications. For example, in the case where the shaft, bearings and bearing support structure are all in a heated environment, the effect of thermal expansion on the bearings can be insignificant (assuming that all components are made of steel).

The shaft expansion concern arises when the shaft is in a heated environment but the bearings and bearing support structure are not. In this case the slot length in the shaft should be machined so as to accommodate the amount of linear shaft expansion.

Calculate the minimum slot length (△L) as follows:

$$\triangle L = \alpha \cdot X \triangle TEMP_{sys}$$

Where:

△L = differential linear expansion (inches)
α = coefficient of thermal expansion (inch/inch/°F)
($\alpha = 7 \times 10^{-6}$ inch/inch/°F for most carbon steel shafting)
($\alpha = 1 \times 10^{-5}$ inch/inch/°F for most stainless steel shafting)
X = length of shaft (inches)
$\triangle TEMP_{sys}$ = operating shaft temperature (°F) - installed shaft temperature (°F)

Replacing Existing Sealmaster Gold Inserts:

Note: Replacement Sealmaster bearing inserts are intended for use in Sealmaster housings only.

NOTICE

• These bearings are designed for maximum permissible static misalignment of ± 2 degrees. Installation, handling or operation of the bearing in excess of the maximum of ± 2 degrees can cause reduction in bearing performance and may lead to equipment failure.

• Do not strike or hammer on any component of the bearing and/or shaft. Impact can result in damage to the bearing that may cause reduction in bearing performance and may lead to equipment failure.

Step 1: Loosen and Remove Housing Mounting Bolts

Step 2: Remove Bearing from Shaft

Loosen the locking mechanism and slide the bearing off the shaft.

Step 3: Remove the Bearing Insert from the Housing

Secure housing in a vise. Remove lubrication fitting and lock pin from the housing. Do not discard the lubrication fitting or lock pin. Remove insert from housing in the following fashion:

a. For Spherical OD Inserts:
Using a bar placed in the insert bore as a lever, swing the insert to line up the outer ring with the load slots and remove insert from load slots.

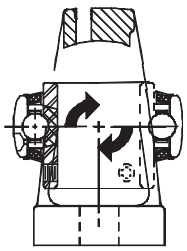

b. For Expansion (AR) Inserts:
Slide the insert in the axial direction out of the housing.

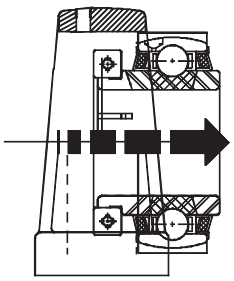

Step 4: Inspect and Prepare Housing

Housings should be inspected for damage prior to installation. Wipe housing bore clean as necessary and check that the lubrication hole is clean and free of debris. Wetting of the housing bore with oil or grease may be done to ease installation of bearing insert.

Step 5: Load New Insert

With the bearing housing still in the vise, load the insert in the following fashion:

a. For Spherical OD Inserts:

i. Place the bearing insert into the housing load slots, positioning the insert outer ring dimple and lubrication hole in line with the housing lubrication hole.

ii. Using a bar placed in the insert bore as a lever, swing the insert into place within the housing. Insert should have a snug fit in the housing. If insert can be made to swivel by hand in the housing bore, fit is too lose and entire unit should be replaced. If heavy force is required, fit is too tight and entire unit should be replaced.

iii. Ensure alignment of the outer ring dimple and lubrication hole and housing lubrication hole.

b. For Expansion (AR) Inserts

i. Slide bearing insert into the housing.

ii. Ensure alignment of the outer ring dimple and lubrication hole, brass ring lubrication hole, and housing lubrication hole.

Step 6: Install Lock Pin and Lubrication Fitting

Place the lock pin in the housing lubrication hole, ensuring that it seats in the outer ring dimple. Tighten the lubrication fitting into the housing lubrication hole until snug, then loosen ¼ turn.

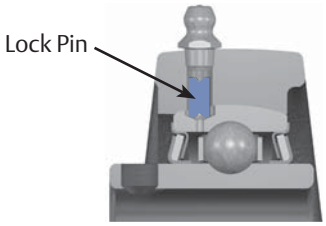

NOTICE:

Over tightening or under tightening of the lubrication fitting may lead to reduction in bearing performance.

Step 7: Refer to Steps 1 - 6 from the "Mounting Housed Bearing Units" Section Pages G-246 to G-247

Sealmaster Material Handling Mounted Ball Bearing Housed Units

NOTICE

• These bearings are designed for maximum permissible static misalignment of ± 1 1/2 degrees. Installation, handling or operation of the bearing in excess of the maximum of ± 1 1/2 degrees can cause reduction in bearing performance and may lead to equipment failure.

• Do not strike or hammer on any component of the bearing and/or shaft. Impact can result in damage to the bearing that may cause reduction in bearing performance and may lead to equipment failure.

Step 1: Inspect Shaft and Bore

Shaft should be within tolerance range shown in the table, clean and free of nicks and burrs. Mount bearings on unused section of shafting or repair/replace shafting as required. Inspect both the shaft and bearing bore for debris or contaminants. Wipe clean as necessary.

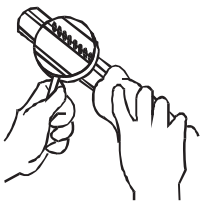

SM MH Table 1

Recommended Shaft Tolerances	
Nominal Bore Diameter	Tolerance (inch)
1/2 - 1 15/16	+0.0000 / -0.0005
2 - 3 3/16	+0.0000 / -0.0010

Step 2: Check Support Surfaces

Make sure the base of the housing and the support surfaces are clean and free from burrs. If the housing elevation is adjusted with shims these must cover the entire contact area between the housing and the support surface.

Step 3: Install Unit

To aid installation, keep weight off bearing during mounting. Slide unit onto shaft by pushing on the inner ring. If it is difficult to mount bearing on shaft, use a piece of emery cloth to reduce any high spots on the shaft.

Step 4: Fasten Unit in Place

Install housing mounting bolts and check bearing alignment. Align the bearing units as closely as possible. Tighten mounting bolts to recommended fastener torques. Check the shaft for freedom of rotation by rotating shaft with hand in both directions.

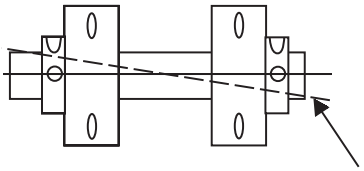

Sealmaster Material Handling Mounted Ball Bearing Housed Units continued

Step 6: Tighten Locking Mechanism

a. Setscrew Locking Inserts

Setscrews in multiple bearing applications should be aligned as shown.

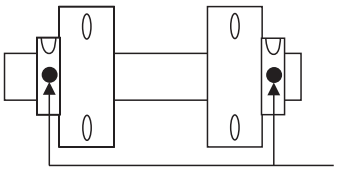

Tighten bearing units to the shaft as follows:

i. Torque the first setscrew "A" to one half of the recommended torque in Table 2.

ii. Torque the second setscrew "B" to the full recommended torque. Go back to the first setscrew "A" and tighten to the full recommended torque.

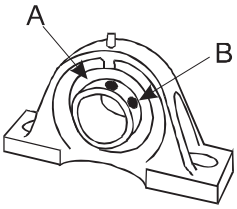

If the bearing unit has setscrew locking on both sides of the inner ring (Double Lock Setscrew), repeat the same procedure for the second pair of setscrews. Check shaft again for freedom of rotation and then tighten the second bearing unit in the same fashion. When all bearings are tightened, perform a final check to the shaft for freedom of rotation.

SM MH Table 2

Setscrew Torque		
Screw Size	Hex Size	Inch-Pounds
1/4-28	1/8	65 - 85
5/16-24	5/32	125 - 165
3/8-24	3/16	230 - 300

b. Skwezloc Locking Inserts

i. Be sure that the Skwezloc collar is fitted square and snug against the shoulder on the inner ring as shown.

ii. Torque the Skwezloc collar cap screw to the full recommended torque in Table 3.

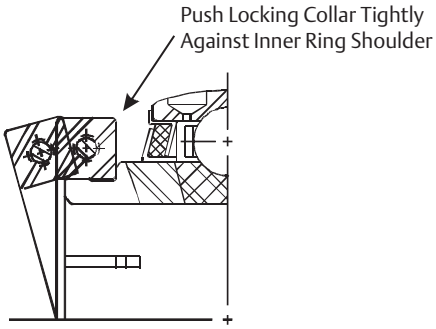

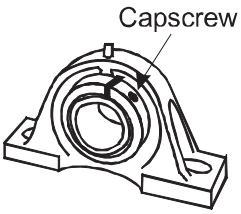

SM MH Table 3

Skwezloc Concentric Locking Collar Cap Screw Torque		
Screw Size	Torx Size	Inch-Pounds
# 8-32	T-25	70
# 10-24	T-27	100
1/4-20	T-30	240

Check shaft again for freedom of rotation and then tighten the second bearing unit in the same fashion. When all bearings are tightened, perform a final check to the shaft for freedom of rotation.

Step 7: End Cover Installation

Position the cap so it is flush with the housing, and align the removal nub in the 12 o'clock position. Press evenly on end of cap by hand to install in the machined housing groove.

Replacing Existing Sealmaster Material Handling Inserts:

Note: Replacement Sealmaster bearing inserts are intended for use in Sealmaster housings only.

NOTICE

• These bearings are designed for maximum permissible static misalignment of ± 1 1/2 degrees. Installation, handling or operation of the bearing in excess of the maximum of ± 1 1/2 degrees can cause reduction in bearing performance and may lead to equipment failure.

• Do not strike or hammer on any component of the bearing and/or shaft. Impact can result in damage to the bearing that may cause reduction in bearing performance and may lead to equipment failure.

Step 1: Loosen and Remove Housing Mounting Bolts

Step 2: Remove Bearing from Shaft

Remove the end cover. Loosen the locking mechanism and slide the bearing off the shaft.

Step 3: Remove the Bearing Insert from the Housing

Secure housing in a vise. Using a bar placed in the insert bore as a lever, swing the insert to line up the outer ring with the load slots and remove insert from load slots.

Step 4: Inspect and Prepare Housing

Housings should be inspected for damage prior to installation. Wipe housing bore clean as necessary and check that the lubrication groove and hole are clean and free of debris. Wetting of the housing bore with oil or grease may be done to ease installation of bearing insert.

Step 5: Load New Insert

With the bearing housing still in the vise, load the insert in the following fashion:

a. Place the bearing insert into the housing load slots, positioning the anti rotation rivet on the outer ring in the load slot as to not shear it off when the swinging insert into place. Also, position the outer ring lubrication hole so it will install in line with the housing lubrication hole.

b. Using a bar placed in the insert bore as a lever, swing the insert into place within the housing. Insert should have a snug fit in the housing. If insert can be made to swivel by hand in the housing bore, fit is too lose and entire unit should be replaced. If heavy force is required, fit is too tight and entire unit should be replaced.

c. Ensure alignment of the anti rotation rivet in the load slot and outer ring lubrication hole in the housing lubrication hole.

Step 6: Refer to Steps 1 - 6 from the “Mounting Housed Bearing Units” Section Pages G-251 to G-252

Sealmaster Gold and Material Handling Bearing Lubrication:

All Sealmaster Gold and Material Handling Ball Bearings are delivered with a high quality lithium complex grease with an EP additive. The bearing is ready for use with no initial lubrication required. The grease consists of a lithium complex thickener, mineral oil, and NLGI grade 2 consistency. Compatibility of grease is critical; therefore consult with Application Engineering and your grease supplier to insure greases are compatible. For best performance it is recommended to relubricate with lithium complex thickened grease with a comparable NLGI consistency and base oil properties.

Relubricatable Sealmaster bearings are supplied with grease fittings or zerks for ease of lubrication with hand or automatic grease guns. Always wipe the fitting and grease nozzle clean.

Note: Sealmaster bearings with the RM suffix are Reduced Maintenance Bearings (ex. NP-16 RM). Sealmaster Reduced Maintenance Bearings are designed to operate with the standard factory fill of grease and are designed not to be lubricated.

CAUTION: If possible, it is recommended to lubricate the bearing while rotating, until grease purge is seen from the seals. If this is not an option due to safety reasons, follow the alternate lubrication procedure below.

Re-Lubrication Procedure:

Stop rotating equipment. Add one half of the recommended amount shown in Table 1. Start the bearing and run for a few minutes. Stop the bearing and add the second half of the recommended amount. A temperature rise after lubrication, sometimes 30°F (17°C), is normal. Bearing should operate at temperatures less than 200°F (94°C) and should not exceed 250° (121°C) for intermittent operation. For lubrication guidelines, see Tables 2 and 3.

Note: Tables 2 and 3 are general recommendations. Experience and testing may be required for specific applications.

Note: Grease charges in Table 1 are based on the use of lithium complex thickened grease with a NLGI grade 2 consistency.

Note: The Maximum Operational Speeds listed in Table 2 and 3 are based on the use of a single lock setscrew insert with felt seals. For maximum operational speeds of other locking mechanisms and seals, refer to speed rating section or consult Application Engineering.

LO and XLO Relubrication Frequency

LO and XLO bearings are designed for applications which require the bearing to operate with less torque or drag than a standard bearing.

Note: Addition of lubricant to the bearing will increase bearing drag.

If relubrication is necessary:
1. Add a very small amount of lubricant
2. Check bearing rotational torque (be sure that the bearing still rotates freely enough for the application.)

Sealmaster Ball Lube Table 1 / Grease Charge for Relubrication

Series	Bore Diameter Gold - Performance: Standard Duty	Bore Diameter Gold - Performance: Medium Duty	Grease Charge (Mass - Ounces)	Bore Diameter Material Handling Bearing	Grease Charge (Mass - Ounces)
2-012	1/2 - 3/4	-	0.03	-	-
2-015	13/16 - 1	-	0.04	1	0.03
2-13	1 1/16 - 1 1/4R	15/16 - 1	0.09	1 1/16 - 1 1/4R	0.06
2-17	1 1/4 - 1 7/16	1 3/16	0.13	1 1/4 - 1 7/16	0.09
2-19	1 1/2 - 1 9/16	1 7/16	0.18	1 1/2 - 1 9/16	0.14
2-111	1 5/8 - 1 3/4	1 1/2	0.20	1 5/8 - 1 3/4	0.16
2-115	1 13/16 - 2R	1 11/16 - 1 3/4	0.22	1 13/16 - 2R	0.18
2-23	2 - 2 3/16	1 15/16	0.30	2 - 2 3/16	0.25
2-27	2 1/4 - 2 7/16	2 3/16	0.38	-	-
2-211	2 1/2 - 2 11/16	2 7/16 - 2 1/2	0.53	-	-
2-215	2 13/16 - 2 15/16	2 11/16	0.62	-	-
2-33	3 - 3 3/16	2 15/16	0.88	-	-
2-37	3 1/4 - 3 7/16	3 3/16	1.11	-	-
2-38	3 1/2	3 7/16	1.37	-	-
2-43	3 15/16 - 4 3/16	3 15/16 - 4	2.50	-	-
2-47	5	4 7/16 - 4 15/16	3.91	-	-

Sealmaster Relubrication Frequency

Sealmaster Ball Lube Table 2

Environment	Temperature (°F)	Speed (% Catalog Max)	Frequency
Dirty	-20 to 250	0 - 100%	Daily to 1 Week
Clean	-20 to 125	0 - 25%	4 to 10 Months
		26 - 50%	1 to 4 Months
		51 - 75%	1 Week to 1 Month
		76 - 100%	Daily to 1 Week
	125 to 175	0 - 25%	2 to 6 Weeks
		26 - 50%	1 Week to 1 Month
		51 - 75%	Daily to 1 Week
		76 - 100%	
	175 to 250	0 - 100%	

Sealmaster High Temperature Suffix Modified Bearing Relubrication Frequency

Sealmaster Ball Lube Table 3

Environment	Temperature (°F)	Speed (% Catalog Max)	HT / HTC / HTA Suffix (1)	HI Suffix (2)
Dirty	-20 to 400	0 - 100%	Daily to 1 Week	Daily to 1 Week
Clean	200 to 300	0 - 25%	1 to 3 Months	6 to 12 Months
		26 - 50%	2 to 6 Weeks	2 to 6 Months
		51 - 75%	Daily to 1 Week	2 Weeks to 2 Months
		76 - 100%	Daily to 1 Week	Daily to 1 Week
	300 to 400	0 - 25%	2 Weeks to 1 Month	3 to 6 Months
		26 - 50%	1 to 2 Weeks	1 to 3 Months
		51 - 75%	Daily to 1 Week	1 Week to 1 Month
		76 - 100%	Daily to 1 Week	Daily to 1 Week

(1) Use high quality lithium complex grease, NLGI#2 and synthetic hydrocarbon oil with ISO 220 viscosity
(2) Use Krytox GPL-226, no substitutions

Browning Mounted Ball Bearing Housed Units

NOTICE

• These bearings are designed for maximum permissible static misalignment of ± 1 1/2 degrees. Installation, handling or operation of the bearing in excess of the maximum of ± 1 1/2 degrees can cause reduction in bearing performance and may lead to equipment failure.

• Do not strike or hammer on any component of the bearing and/or shaft. Impact can result in damage to the bearing that may cause reduction in bearing performance and may lead to equipment failure.

Step 1: Inspect Shaft and Bore

Shaft should be within tolerance range shown in the table, clean and free of nicks and burrs. Mount bearings on unused section of shafting or repair/replace shafting as required. Inspect both the shaft and bearing bore for debris or contaminants. Wipe clean as necessary.

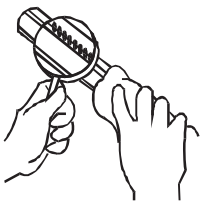

BMD Table 1

Recommended Shaft Tolerances	
Nominal Bore Diameter	Tolerance (Inches)
1/2 - 1 15/16	+0.0000 / -0.0005
2 - 2 7/16	+0.0000 / -0.0010

Step 2: Check Support Surfaces

Make sure the base of the housing and the support surfaces are clean and free from burrs. If the housing elevation is adjusted with shims these must cover the entire contact area between the housing and the support surface.

Step 3: Install Unit

To aid installation, keep weight off bearing during mounting. Slide unit onto shaft by pushing on the inner ring. If it is difficult to mount bearing on shaft, use a piece of emery cloth to reduce any high spots on the shaft.

Step 4: Fasten Unit in Place

Install housing mounting bolts and check bearing alignment. Align the bearing units as closely as possible. Tighten mounting bolts to recommended fastener torques. Check the shaft for freedom of rotation by rotating shaft with hand in both directions.

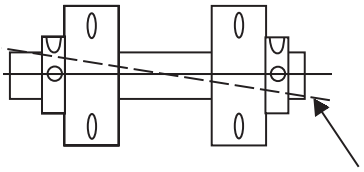

Browning Mounted Ball Bearing Housed Units continued

Step 5: Tighten Locking Mechanism

a. Setscrew Locking Inserts

Setscrews in multiple bearing applications should be aligned as shown.

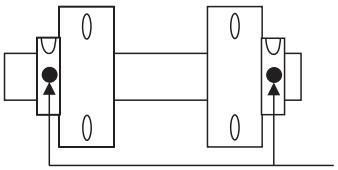

Tighten bearing units to the shaft as follows:

i. Torque the first setscrew "A" to one half of the recommended torque in Table 2.

ii. Torque the second setscrew "B" to the full recommended torque. Go back to the first setscrew "A" and tighten to the full recommended torque.

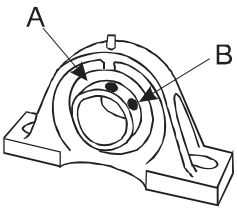

BMD Table 2

Setscrew Recommended Torque		
Screw Size	Hex Size	Inch-Pounds
1/4-28	1/8	65 - 85
5/16-24	5/32	125 - 165
3/8-24	3/16	230 - 300
7/16-20	7/32	350 - 450
1/2-20	1/4	500 - 650
5/8-18	5/16	1100 - 1440

b. Eccentric Locking Inserts

i. Place collar on inner race and rotate by hand in direction of shaft rotation until eccentrics are engaged.

ii. Insert drift pin into the hole in the collar O.D. (B) and lock in direction of shaft rotation with the aid of small hammer.

iii. Torque single setscrew (A) to recommended torque in Table 3.

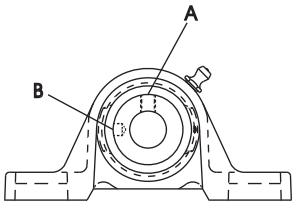

BMD Table 3

Eccentric Locking Recommended Torque		
Screw Size	Hex Size	Inch-Pounds
1/4-28	1/8	65 - 85
5/16-24	5/32	125 - 165
3/8-24	3/16	230 - 300
7/16-20	7/32	350 - 450
1/2-20	1/4	500 - 650
5/8-18	5/16	1100 - 1440

c. BOA Locking Inserts

i. Be sure that the BOA collar is fitted square and snug against the shoulder on the inner ring as shown.

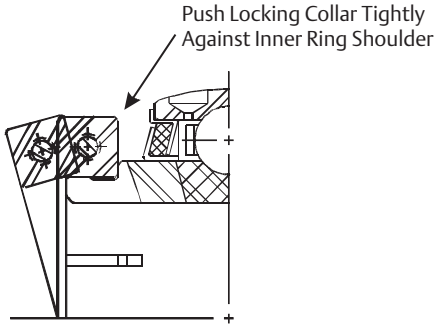

ii. Torque the BOA collar cap screw to the full recommended torque in Table 4.

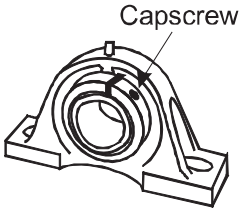

BMD Table 4

BOA Concentric Locking Collar Cap Screw Torque		
Screw Size	Torx Size	Inch-Pounds
# 8-32	T-25	70
# 10-24	T-27	100
1/4-20	T-30	240
5/16-18	T-45	495

Check shaft again for freedom of rotation and then tighten the second bearing unit in the same fashion. When all bearings are tightened, perform a final check to the shaft for freedom of rotation.

Mounting Cylindrical O.D. (VER Style) Inserts:

Step 1: Inspect and Prepare Housing

To achieve proper bearing fit, the housing should be machined to the correct bore size. For recommended housing bore sizes, refer to the Browning bearing catalog or consult Application Engineering. The housing bearing seat should be wiped clean and free of debris.

Step 2: Install Unit in Housing

Press bearing into housing by applying force to the face of the outer ring. Do not hammer on any component of the bearing or apply force to the inner ring.

Step 3: Refer to Steps 1 - 5 from the "Mounting Housed Bearing Units" Section Pages G-255 to G-256

Replacing Existing Browning Inserts:

Note: Replacement Browning bearing inserts are intended for use in Browning housings only.

Step 1: Loosen and Remove Housing Mounting Bolts

Step 2: Remove Bearing from Shaft

Loosen the locking mechanism and slide the bearing off the shaft.

Step 3: Remove the Bearing Insert from the Housing

Secure housing in a vise. Using a bar placed in the insert bore as a lever, swing the insert to line up the outer ring with the load slots and remove insert from load slots.

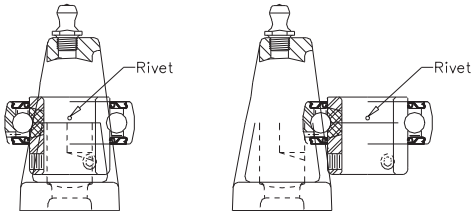

Step 4: Inspect and Prepare Housing

Housings should be inspected for damage prior to installation. Wipe housing bore clean as necessary and check that the lubrication groove and hole are clean and free of debris. Wetting of the housing bore with oil or grease may be done to ease installation of bearing insert.

Step 5: Load New Insert

With the bearing housing still in the vise, load the insert in the following fashion:

a. Place the bearing insert into the housing load slots, positioning the anti rotation rivet on the outer ring in the load slot as to not shear it off when the swinging insert into place. Also, position the outer ring lubrication hole so it will install in line with the housing lubrication hole.

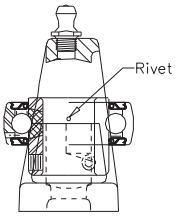

b. Using a bar placed in the insert bore as a lever, swing the insert into place within the housing. Insert should have a snug fit in the housing. If insert can be made to swivel by hand in the housing bore, fit is too lose and entire unit should be replaced. If heavy force is required, fit is too tight and entire unit should be replaced.

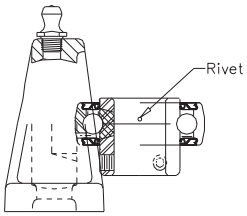

c. Ensure alignment of the anti rotation rivet in the load slot and outer ring lubrication hole in the housing lubrication hole.

Step 6: Refer to Steps 1 - 5 from the "Mounting Housed Bearing Units" Section Pages G-255 to G-256

Browning Mounted Ball Lubrication:

All Browning Ball Bearings are delivered with a high quality lithium complex grease with an EP additive. The bearing is ready for use with no initial lubrication required. The grease consists of a lithium complex thickener, mineral oil, and NLGI grade 2 consistency.

Compatibility of grease is critical; therefore consult with Application Engineering and your grease supplier to insure greases are compatible. For best performance it is recommended to relubricate with lithium complex thickened grease with a comparable NLGI consistency and base oil properties.

Relubricatable Browning bearings are supplied with grease fittings or zerks for ease of lubrication with hand or automatic grease guns. Always wipe the fitting and grease nozzle clean.

CAUTION: If possible, it is recommended to lubricate the bearing while rotating, until grease purge is seen from the seals. If this is not an option due to safety reasons, follow the alternate lubrication procedure below.

Re-Lubrication Procedure:

Stop rotating equipment. Add one half of the recommended amount shown in Table 1. Start the bearing and run for a few minutes. Stop the bearing and add the second half of the recommended amount. A temperature rise after lubrication, sometimes 30°F (17°C), is normal. Bearing should operate at temperatures less than 200°F (94°C) and should not exceed 250° (121°C) for intermittent operation. For lubrication guidelines, see Table 2.

Note: Table 2 is general recommendations. Experience and testing may be required for specific applications.

Note: Grease charges in Table 1 are based on the use of lithium complex thickened grease with a NLGI grade 2 consistency.

Browning Lube Table 1
Grease Charge for Relubrication

Series	Shaft Size		Grease Charge (Mass - Ounces)
	100 & 200 Series	300 Series	
	Intermediate & Standard Duty	Medium Duty	
L-10	1/2 - 5/8	x	0.02
2-012	3/4	x	0.03
2-015	13/16 - 1	x	0.03
2-13	1 1/16 - 1 1/4S	15/16 - 1	0.06
2-17	1 1/4 - 1 7/16	1 3/16	0.09
2-19	1 1/2 - 1 9/16	1 7/16	0.14
2-111	1 5/8 - 1 3/4	1 1/2	0.16
2-115	1 13/16 - 2	1 11/16 - 1 3/4	0.18
2-23	2 - 2 3/16	1 15/16	0.25
2-27	2 1/4 - 2 7/16	2 3/16	0.35
2-211	2 1/2 - 2 11/16	2 7/16 - 2 1/2	0.46
2-215	2 13/16 - 2 15/16	2 11/16	0.48
2-33	x	2 15/16 - 3	0.65
2-38	x	3 7/16 - 3 1/2	1.05
2-43	x	3 15/16	1.77

Browning Lube Table 2
Relubrication Recommendations

Environment	Temperature (°F)	Speed (% Catalog Max)	Frequency
Dirty	-20 to 250	0 - 100%	Daily to 1 Week
Clean	-20 to 125	0 - 25%	4 to 10 Months
		26 - 50%	1 to 4 Months
		51 - 75%	1 Week to 1 Month
		76 - 100%	Daily to 1 Week
	125 to 175	0 - 25%	2 to 6 Weeks
		26 - 50%	1 Week to 1 Month
		51 - 75%	Daily to 1 Week
		76 - 100%	
	175 to 250	0 - 100%	Daily to 1 Week

Cylindrical OD Housing Fit Guidelines

Tables 14-15 list fit up guidelines for light load conveyor roll application per ABMA J6 fit. Testing and experience is needed to verify if this fit is sufficient for specific operation conditions. If tighter press fit is needed, contact Application Engineering to review if the standard bearing internal clearance is sufficient or a modified clearance is needed to prevent reduction or elimination of internal clearance.

For best reliability, bearings and housings should be selectively matched to reduce variation in fit up due to manufacturing tolerances of the bearing outside diameter and housing bore. Roll pockets should be machined parallel with the axis of the shaft and both sides should be on the same centerline to minimize potential for misalignment.

Table 14 - ER, VER and Cylindrical OD Insert Bearing Housing/Roll Bore

					Dimensions inch / mm									
Bore Diameter		Sealmaster ER	Browning VER	Nominal Outside Diameter	Outside Diameter*		Stationary Housing				Revolving Housing			
							Diameters		Theoretical Fit		Diameters		Theoretical Fit	
inch	mm				Max	Min	Max	Min	Tight	Loose	Max	Min	Tight	Loose
1/2	-	ER-8	VER-208											
9/16	-	ER-9	-											
5/8	-	ER-10	VER-210	1.8504	1.8504	1.8499	1.8509	1.8503	.0001	.0010	1.8504	1.8498	.0006	.0005
11/16	-	ER-11	-	47	47.002	46.9875	47.0129	46.9976	.0025	.0254	47.002	46.9848	.0152	.0127
3/4	-	ER-12	VER-212											
-	20	ER-204	-											
7/8	-	ER-14	VER-214											
15/16	-	ER-15	VER-215	2.0472	2.0472	2.0466	2.0476	2.0471	.0001	.0010	2.0471	2.0466	.0006	.0005
1	-	ER-16	VER-216	52	51.9989	51.9836	52.0090	51.9963	.0025	.0254	51.9963	51.9836	.0152	.0127
-	25	ER-205	-											
1 1/16	-	ER-17	VER-217											
1 1/8	-	ER-18	VER-218											
1 3/16	-	ER-19	VER-219	2.4409	2.4409	2.4403	2.4413	2.4408	.0001	.0010	2.4408	2.4403	.0006	.0005
1 1/4	-	ER-20R	VER-220S	62	61.9989	61.9836	62.0090	61.9963	.0025	.0254	61.9963	61.9836	.0152	.0127
-	30	ER-206	-											
1 1/4	-	ER-20	VER-220											
1 5/16	-	ER-21	-											
1 3/8	-	ER-22	VER-222	2.8364	2.8346	2.8340	2.8350	2.8345	.0001	.0010	2.8345	2.8340	.0006	.0005
1 7/16	-	ER-23	VER-223	72	71.9988	71.9836	72.0090	71.9963	.0025	.0254	71.9963	71.98836	.0152	.0127
-	35	ER-207	-											
1 1/2	-	ER-24	VER-224											
1 9/16	-	ER-25	VER-225	3.1496	3.1496	3.1490	3.1500	3.1495	.0001	.0010	3.1495	3.1490	.0006	.0005
-	40	ER-208	-	80	79.9998	79.9846	80.0100	79.9973	.0025	.0254	79.9973	79.9846	.0152	.0127
1 5/8	-	ER-26	VER-226											
1 11/16	-	ER-27	VER-227	3.3465	3.3465	3.3459	3.3470	3.3464	.0001	.0013	3.3464	3.3458	.0007	.0007
1 3/4	-	ER-28	VER-228	85	85.0011	84.9808	85.0138	84.9986	.0025	.0330	84.9986	84.9833	.0178	.0178
-	45	ER-209	-											

This chart displays the recommended housing dimensions for Sealmaster ER and Browning VER ball bearings at the various bore diameters and nominal Outer Diameter. For Sealmaster ER with Skwezloc Concentric locking use the similar size ER with setscrew locking as shown. For other Browning Cylindrical O.D. bearings use the similar nominal dimensioned bearing.

* Outside diameter may be slightly oversized due to seal press fit, dimensions listed are as measured prior to seal assembly.

Table 14 - ER, VER and Cylindrical OD Insert Bearing Housing/Roll Bore cont.

Bore Diameter		Sealmaster ER	Browning VER	Nominal Outside Diameter	Dimensions inch / mm									
					Outside Diameter*		Stationary Housing				Revolving Housing			
							Diameters		Theoretical Fit		Diameters		Theoretical Fit	
inch	mm				Max	Min	Max	Min	Tight	Loose	Max	Min	Tight	Loose
1 13/16	-	ER-29	-	3.5433 90	3.5433 89.998	3.5425 89.9795	3.5438 90.0125	3.5432 89.9972	.0001 .0025	.0013 .0330	3.5432 89.9973	3.5426 89.9820	.0007 .0178	.0007 .0178
1 7/8	-	ER-30	-											
1 15/16	-	ER-31	VER-231											
2	-	ER-32R	VER-232S											
-	50	ER-210	-											
2	-	ER-32	VER-232	3.937 100	3.9370 99.9998	3.9362 99.9795	3.9375 100.0125	3.9369 99.9973	.0001 .0025	.0013 .0330	3.9369 99.9973	3.9363 99.9820	.0007 .0178	.0007 .0178
2 1/8	-	ER-34	-											
2 3/16	-	ER-35	VER-235											
-	55	ER-211	-											
2 1/4	-	ER-36	VER-236	4.3307 110	4.3307 109.9998	4.3299 109.9795	4.3312 110.0125	4.3306 109.9972	.0001 .0025	.0013 .0330	4.3306 109.9972	4.3300 109.9820	.0007 .0178	.0007 .0178
2 3/8	-	ER-38	VER-238											
2 7/16	-	ER-39	VER-239											
-	60	ER-212	-											
2 1/2	-	ER-40	-	4.9213 125	4.9213 125.0010	4.9203 124.9756	4.9219 125.0163	4.9211 124.9959	.0002 .0051	.0016 .0406	4.9212 124.9985	4.9204 124.9782	.0009 .0229	.0009 .0229
2 11/16	-	ER-43	-											
-	70	ER-214	-											
2 7/8	-	ER-46	-	5.1181 130	5.1181 129.9997	5.1171 129.9743	5.1187 130.0150	5.1179 129.9947	.0002 .0051	.0016 .0406	5.1180 129.9972	5.1172 129.9769	.0009 .0229	.0009 .0229
2 15/16	-	ER-47	-											
-	75	ER-215	-											
3	-	ER-48	-	5.5118 140	5.5118 139.9997	5.5108 139.9743	5.5124 140.0150	5.5116 139.9946	.0002 .0051	.0016 .0406	5.5117 139.9972	5.5109 139.9769	.0009 .0229	.0009 .0229
3 3/16	-	ER-51	-											
-	80	ER-216	-											
3 1/4	-	ER-52	-	5.9055 150	5.9055 148.9997	5.9045 149.9743	5.9061 150.0149	5.9053 149.9946	.0002 .0051	.0016 .0406	5.9054 149.9972	5.9046 149.9768	.0009 .0229	.0009 .0229
3 3/8	-	ER-54	-											
3 7/16	-	ER-55	-											
3 15/16	-	ER-63	-	7.4803 190	7.4803 189.9996	7.4791 189.9691	7.4815 190.0301	7.4801 189.9945	.0002 .0051	.0024 .0610	7.4805 190.0047	7.4791 189.9691	.0012 .0305	.0014 .0356
4	-	ER-64	-											

This chart displays the recommended housing dimensions for Sealmaster ER and Browning VER ball bearings at the various bore diameters and nominal Outer Diameter. For Sealmaster ER with Skwezloc Concentric locking use the similar size ER with setscrew locking as shown. For other Browning Cylindrical O.D. bearings use the similar nominal dimensioned bearing.
* Outside diameter may be slightly oversized due to seal press fit, dimensions listed are as measured prior to seal assembly.

Table 15 - Sealmaster SC and MSC Housing Bore

Standard Duty			Medium Duty			Nominal Outside Diameter	Housing Dimension Recommendations inch/mm					
Bore Diameter		Part No.	Bore Diameter		Part No.		Outside Diameter		Stationary Housing		Revolving Housing	
						inch mm	Diameters		Diameters		Diameters	
inch	mm		inch	mm			Max	Min	Max	Min	Max	Min
1/2	-	SC-8	-	-	-	2 11/16 68.26	2.6885 68.288	2.6865 68.237	2.6905 68.339	2.6885 68.288	2.6875 68.263	2.6855 68.212
9/16	-	SC-9	-	-	-							
5/8	-	SC-10	-	-	-							
11/16	-	SC-11	-	-	-							
3/4	-	SC-12	-	-	-	2 15/16 74.61	2.9385 74.638	2.9365 74.587	2.9405 74.689	2.9385 74.638	2.9375 74.613	2.9355 74.562
-	20	SC-204	-	-	-							
13/16	-	SC-13	-	-	-	3 1/8 79.38	3.1260 79.400	3.1240 79.350	3.1280 79.451	3.1260 79.400	3.1250 79.375	3.1230 79.324
7/8	-	SC-14	-	-	-							
15/16	-	SC-15	-	-	-							
1	-	SC-16	-	-	-							
-	25	SC-205	-	-	-							
1 1/16	-	SC-17	-	-	-	3 1/2 88.90	3.5010 88.925	3.4990 88.875	3.5030 88.976	3.5010 88.925	3.5000 88.900	3.4980 88.849
1 1/8	-	SC-18	15/16	-	MSC-15							
1 3/16	-	SC-19	1	-	MSC-16							
1 1/4	-	SC-20R	-	25	MSC-305							
-	30	SC-206	-	-	-							
1 1/4	-	SC-20	-	-	-	3 7/8 98.43	3.8760 98.450	3.8740 98.400	3.8780 98.501	3.8760 98.450	3.8750 98.425	3.8730 98.374
1 5/16	-	SC-21	1 3/16	-	MSC-19							
1 3/8	-	SC-22	1 1/4	-	MSC-20							
1 7/16	-	SC-23	-	30	MSC-306							
-	35	SC-207	-	-	-							
1 1/2	-	SC-24	1 3/8	-	MSC-22	4 3/16 106.36	4.1885 106.388	4.1865 106.337	4.1905 106.439	4.1885 106.388	4.1875 106.363	4.1855 106.312
1 9/16	-	SC-25	1 7/16	-	MSC-23							
-	40	SC-208	-	35	MSC-307							
1 5/8	-	SC-26	-	-	-	4 3/8 111.13	4.3760 111.150	4.3740 111.100	4.3780 111.201	4.3760 111.150	4.3750 111.125	4.3730 111.074
1 11/16	-	SC-27	1 1/2		MSC-24							
1 3/4	-	SC-28	-	40	MSC-308							
-	45	SC-209	-	-	-							
1 13/16	-	SC-29	-	-	-	4 9/16 115.89	4.5635 115.913	4.5615 115.862	4.5655 115.964	4.5635 115.913	4.5625 115.888	4.5605 115.837
1 7/8	-	SC-30	1 11/16	-	MSC-27							
1 15/16	-	SC-31	1 3/4	-	MSC-28							
2	-	SC-32R	-	45	MSC-309							
-	50	SC-210	-	-	-							

This chart displays the recommended housing dimensions for Sealmaster SC and MSC ball bearings at the various bore diameters and nominal Outer Diameter. For Sealmaster SC and MSC with Skwezloc Concentric locking use the similar size SC or MSC with setscrew locking as shown.

For additional assistance contact Application Engineering at (800) 626-2093.

Table 15 - Sealmaster SC and MSC Housing Bore cont.

Standard Duty			Medium Duty			Nominal Outside Diameter	Housing Dimension Recommendations inch/mm					
Bore Diameter		Part No.	Bore Diameter		Part No.		Outside Diameter		Stationary Housing		Revolving Housing	
						inch mm	Diameters		Diameters		Diameters	
inch	mm		inch	mm			Max	Min	Max	Min	Max	Min
2	-	SC-32	1 15/16	-	MSC-31	4 15/16 125.41	4.9385 125.438	4.9365 125.387	4.9405 125.489	4.9385 125.438	4.9375 125.413	4.9355 125.362
2 1/8	-	SC-34	2	-	MSC-32							
2 3/16	-	SC-35	-	50	MSC-310							
-	55	SC-211	-	-	-							
-	-	-	-	-	-							
2 1/4	-	SC-36	2 3/16	-	MSC-35	5 7/8 149.23	5.8760 149.250	5.8740 149.200	5.8780 149.301	5.8760 149.250	5.8750 149.225	5.8730 149.174
2 3/8	-	SC-38	2 1/4	-	MSC-36							
2 7/16	-	SC-39	-	55	MSC-311							
-	60	SC-212	-	-	-							
2 1/2	-	SC-40	2 7/16	-	MSC-39	6 1/4	6.2510 158.775	6.2490 158.725	6.2530 158.826	6.2510 158.775	6.2500 158.750	6.2480 158.699
2 11/16	-	SC-43	2 1/2	-	MSC-40							
-	70	SC-214	-	65	MSC-313							
2 7/8	-	SC-46	2 11/16	-	MSC-43	6 5/8 168.28	6.6260 168.300	6.6240 168.250	6.6280 168.351	6.6260 168.300	6.6250 168.275	6.6230 168.224
2 15/16	-	SC-47	2 3/4	-	MSC-44							
-	75	SC-215	-	70	MSC-314							
-	-	-	2 15/16	-	MSC-47	7 158.75	7.0010 177.825	6.9990 177.775	7.0030 177.876	7.0010 177.825	7.0000 177.800	6.9980 177.749
-	-	-	3	-	MSC-48							
-	-	-	-	75	MSC-315							
-	-	-	3 3/16	-	MSC-51	7 7/16 168.28	7.4385 188.938	7.4365 188.887	7.4405 188.989	7.4385 188.938	7.4375 188.913	7.4355 188.862
-	-	-	3 1/4	-	MSC-52							
-	-	-	3 3/8	-	MSC-54							
-	-	-	-	80	MSC-316							
-	-	-	3 7/16	-	MSC-55	8 3/16 177.80	8.1885 207.988	8.1865 207.937	8.1905 208.039	8.1885 207.988	8.1875 207.963	8.1855 207.912
-	-	-	3 1/2	-	MSC-56							
-	-	-	3 15/16	-	MSC-63	9 1/2 188.91	9.5010 241.325	9.4990 241.275	9.5030 241.376	9.5010 241.325	9.5000 241.300	9.4980 241.249
-	-	-	4	-	MSC-64							
-	-	-	-	100	MSC-320							

This chart displays the recommended housing dimensions for Sealmaster SC and MSC ball bearings at the various bore diameters and nominal Outer Diameter. For Sealmaster SC and MSC with Skwezloc Concentric locking use the similar size SC or MSC with setscrew locking as shown.

For additional assistance contact Application Engineering at (800) 626-2093.

Vibration Analysis

BALL BEARINGS VIBRATION ANALYSIS

The following equations are used to calculate the fundamental frequencies for Sealmaster and Browning Ball Bearings.

1. If the insert number is known, proceed to step 2. For housed units, identify the bearing insert number by looking up the unit in the dimension tables, then proceed to step 2.

2. Find the Sealmaster or Browning insert number in Table 16 below and identify the series.

3. Select the vibration geometry information (O, I, B, F) from Table 16.

4. Use this information to calculate the fundamental bearing frequencies:
   - Outer Ball Pass Frequency (Hz) = O x RPM
   - Inner Ball Pass Frequency (Hz) = I x RPM
   - Ball Spin Frequency (Hz) = B x RPM
   - Fundamental Train Frequency (Hz) = F x RPM

Symbol Description Units

RPM = Revolutions per Minute RPM
O = Outer Race Frequency Factor
I = Inner Race Frequency Factor
B = Ball Spin Frequency Factor
F = Fundamental Train Frequency Factor

Table 16 - Vibration Geometry Information

Series	Standard Duty Bore Diameter		Medium Duty Bore Diameter		Pitch Diameter (inch) dM	Number Of Balls N	Size of Balls (inch) D	Factor For Outer Race O	Factor For Inner Race I	Factor For Ball Spin B	Factor for F.T.F. F
	inch	mm	inch	mm							
*L-10	*1/2 to 5/8	N/A	-	-	1.138	9	1/4	0.0585	0.0915	0.0361	0.0065
2-012	1/2 to 3/4	20mm	-	-	1.345	9	9/32	0.0593	0.0907	0.0381	0.0066
2-015	13/16 to 1	25mm	-	-	1.544	10	9/32	0.0682	0.0985	0.0442	0.0068
2-13	1 1/16 to 1 1/4R or S	30mm	15/16 to 1	25mm	1.812	9	3/8	0.0595	0.0905	0.0385	0.0066
2-17	1 1/4 to 1 7/16	35mm	1 3/16	30mm	2.115	9	7/16	0.0595	0.0905	0.0386	0.0066
2-19	1 1/2 to 1 9/16	40mm	1 7/16	35mm	2.362	9	1/2	0.0591	0.0909	0.0376	0.0066
2-111	1 5/8 to 1 3/4	45mm	1 1/2	40mm	2.596	10	1/2	0.0673	0.0994	0.0417	0.0067
2-115	1 13/16 to 2R	50mm	1 11/16 to 1 3/4	45mm	2.763	10	1/2	0.0683	0.0984	0.0445	0.0068
2-23	2 to 2 3/16	55mm	1 15/16	50mm	3.051	10	9/16	0.0680	0.0987	0.0437	0.0068
2-27	2 1/4 to 2 7/16	60mm	2 3/16	55mm	3.356	10	5/8	0.0678	0.0989	0.0432	0.0068
2-211	2 1/2 to 2 11/16	70mm	2 7/16 to 2 1/2	65mm	3.846	10	11/16	0.0684	0.0982	0.0451	0.0068
2-215	2 7/8 to 2 15/16	75mm	2 11/16	70mm	4.045	11	11/16	0.0761	0.1072	0.0476	0.0069
2-33	3 to 3 3/16	80mm	2 15/16 to 3	75mm	4.362	11	3/4	0.0759	0.1074	0.0470	0.0069
2-37	3 1/4 to 3 7/16	-	3 3/16	80mm	4.627	11	25/32	0.0762	0.1071	0.0479	0.0069
2-38	3 1/2	90mm	3 7/16	-	4.922	10	7/8	0.0685	0.0981	0.0454	0.0069
2-43	3 15/16 to 4	-	3 15/16 to 4	100mm	5.808	10	1 1/16	0.0681	0.0986	0.0440	0.0068
3-47	5	-	4 7/16 to 4 15/16	-	7.087	10	1 1/4	0.0686	0.0980	0.0458	0.0069

For specific bearing insert, refer to load rating page G-227 to G-229 to determine series
*L-10 series only applies to Browning units for the Bore Diameters shown. For VER-208 and 210 units use the 2-012 series values

Mounted Ball Bearing Engineering see page G-220.

For more information on bearing capabilities outside of our standard offering, please contact Application Engineering (800) 626-2093.

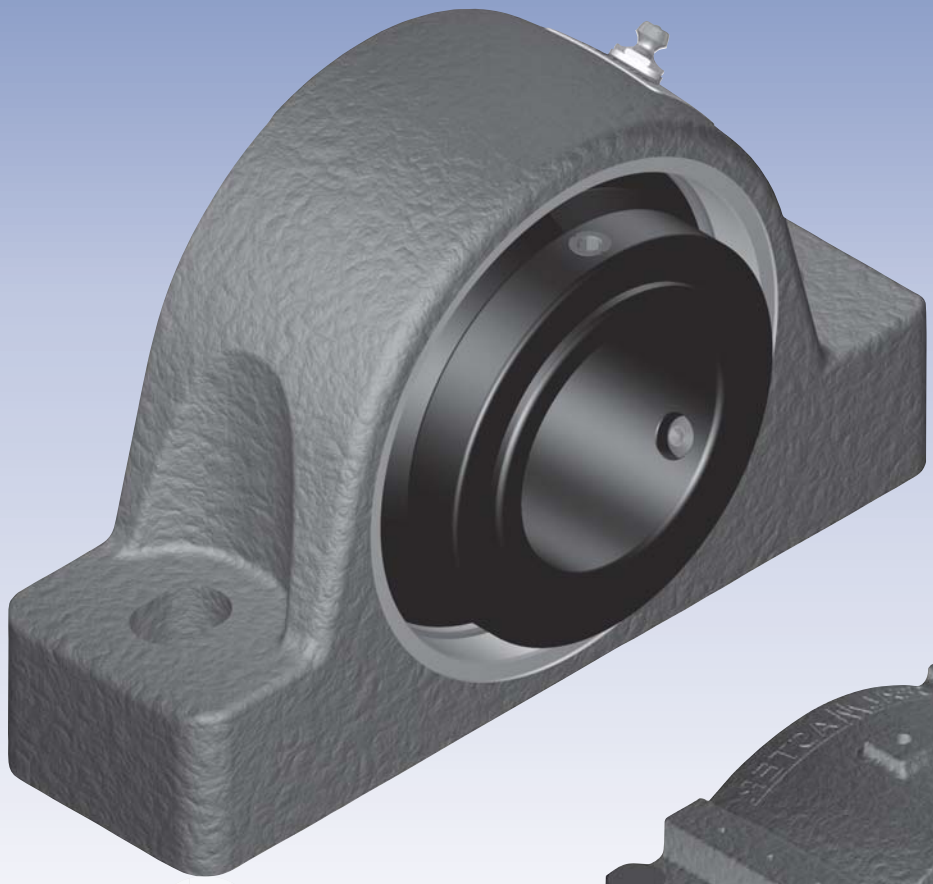

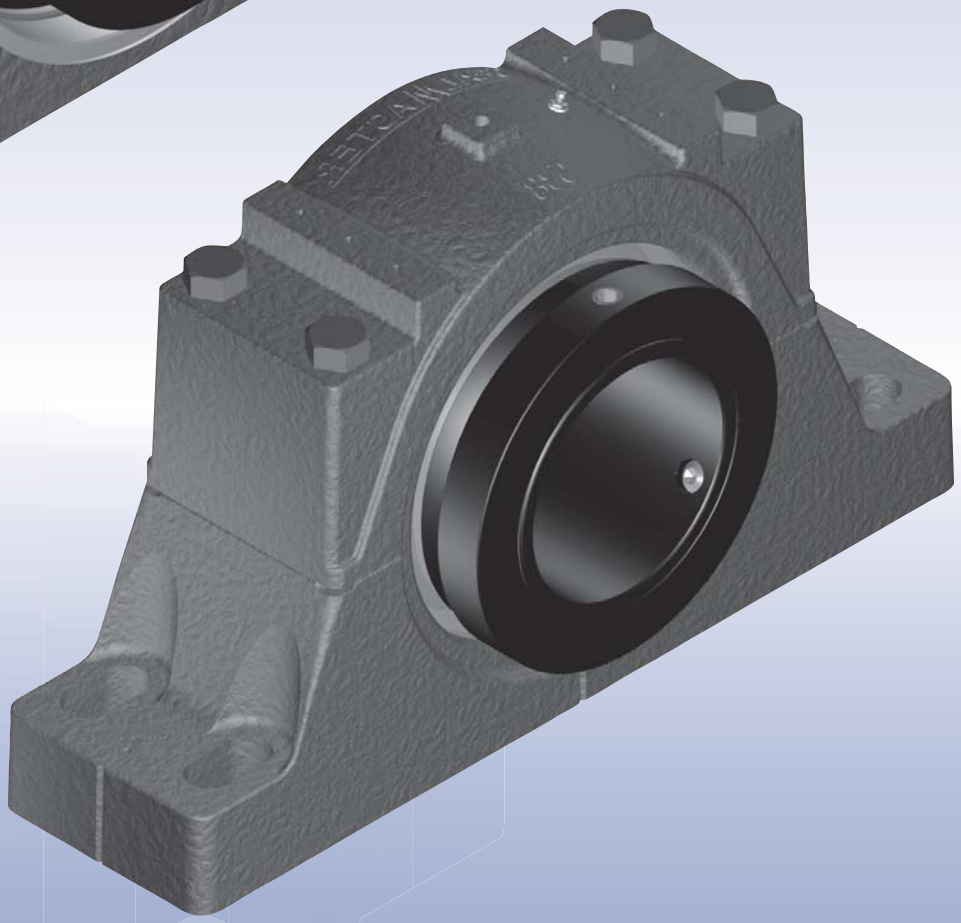

Mounted Spherical Roller Bearings

Modular bearing assembly consisting of sealed and lubricated inch spherical bearing with collar (setscrew) or concentric (adapter mount) locking system contained within a variety of housings types, mounting styles, and housing materials. Mounted spherical roller bearings provide an antifriction solution when supporting rotating shafts with combination radial and thrust loads.

Housing Styles

Pillow Block, Flanges, Take Up Assemblies

Locking Styles

Collar (Setscrew) Or Concentric (Adapter Mount)

Bore Size Range

1 1/8” To 8”

Housing Materials

Cast & Ductile Iron

Mounted Roller Bearing Selection Guide

		Series	Housing style
Sealmaster USRB		USRB5000	Two Bolt Pillow Block
		USRBF5000	Four Bolt Pillow Block
		USRB5000	Four Bolt Pillow Block (No F prefix for 4 7/16” - 4 15/16”)
		USRB5500	Two Bolt Pillow Block (SAF mounting dimensions)
		USRBF5500	Four Bolt Pillow Block (SAF mounting dimensions) (F prefix for 2 7/16” - 3 7/16”)
		USRB5500	Four Bolt Pillow Block (SAF mounting dimensions) (F prefix for 3 15/16” - 8”)
		USFB5000	Four Bolt Flange
		USFC5000	Piloted Flange Cartridge
		USBF5000	Flange Bracket
		USRBE5000	Two Bolt Pillow Block (Type E mounting dimensions)
		USFBE5000	Flange Block (Type E mounting dimensions)
		USFCE5000	Piloted Flange Cartridge (Type E mounting dimensions)
		USTU5000	Wide Slot Take Up
		USTA5000	Top Angle Take Up
		USF3B5000	Three Bolt Flange
		USI5000	Insert

Lock Type					Size Range	
Collar Mount	Adapter Mount	Housing Material	Seal	Standard Seal Options	Inch	Page
USRB5000	USRB5000A	Cast Iron	Felt	Contact	1 1/8”-4”	H-9 to H-10
USRBF5000	USRBF5000A	Cast Iron			2 7/16” - 4”	H-11 to H-12
USRB5000	USRB5000A	Cast Iron			4 7/16” - 4 15/16”	H-11 to H-12
USRB5500	USRB5500A	Cast Iron			1 7/16” - 3 7/16	H-13 to H-14
USRBF5500	USRBF5500A	Cast Iron			2 7/16” - 3 7/16”	H-13 to H-14
USRB5500	USRB5500A	Cast Iron			3 15/16” - 8”	H-13 to H-14
USFB5000	USFB5000A	Cast Iron			1 3/8” - 4”	H-15 to H-16
USFC5000	USFC5000A	Cast Iron			1 3/8” - 4”	H-17 to H-18
USBF5000	USBF5000A	Ductile Iron			1 7/16” - 2 7/16”	H-19 to H-20
USRBE5000	USRBE5000A	Ductile Iron			1 15/16” - 4”	H-21 to H-22
USFBE5000	USFBE5000A	Ductile Iron			1 15/16” - 4”	H-23 to H-24
USFCE5000	USFCE5000A	Ductile Iron			1 15/16” - 4”	H-25 to H-26
USTU5000	USTU5000A	Cast Iron			1 15/16” - 4”	H-27 to H-28
USTA5000	USTA5000A	Cast Iron			1 15/16” - 3 15/16”	H-29
USF3B5000	-	Cast Iron			1 1/8” - 1 1/2”	H-30
USI5000	USI5000A	N/A			1 1/8” - 8”	H-31 to H-32

Sealmaster USRB Performance Mounted Spherical Roller Bearing

Sealmaster USRB performance mounted spherical roller bearings feature black oxide treated bearing steel races with optimized bearing geometry for load capacity, misalignment and speed capabilities. The USRB is available in both setscrew locking and adapter mounting system. The felt seal with flinger provides a good balance between contaminant entry, grease retention and friction. Depending on application requirements, these bearings are available in a wide variety of bore sizes, housing styles, and sealing options as illustrated on the pages to follow.

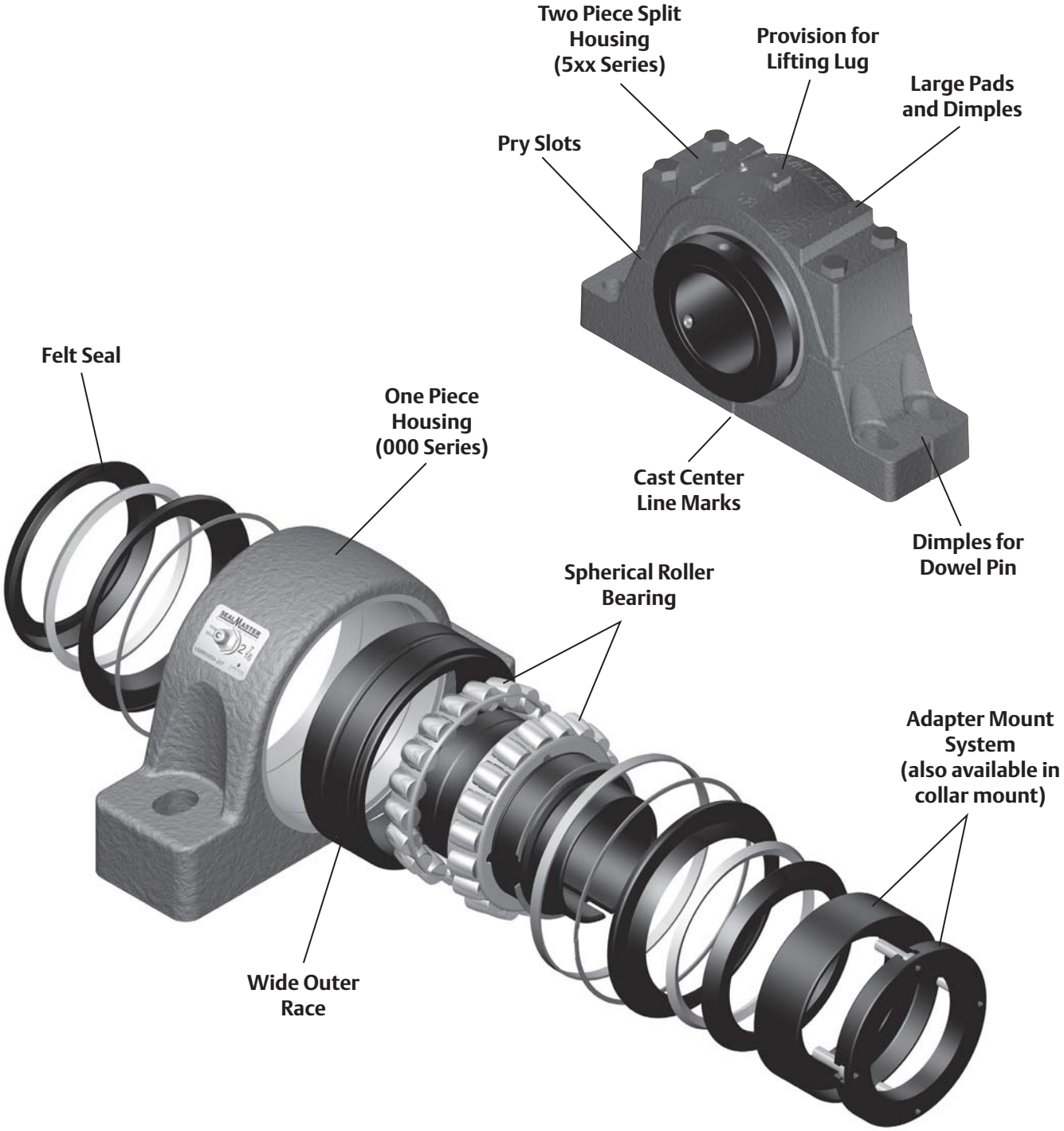

Spherical Roller Bearing Nomenclature

Unitized

Spherical

Housing Type (*see below)

Bolts

- F - Four Bolt Base - 2 7/16” to 4”
  - Where Two Bolt & Four Bolt Options Exist
- No Prefix - Standard Option
  - Two Bolt Only - 1 1/8” to 2 3/16”
  - Four Bolt Only - 4 7/16” - 8”

Type E Mounting Dimensions

Series

- 000 - Standard Series
- 5xx - SAF Mounting Dimensions

Locking Option

- A - Adapter Mount
- No Suffix - Collar Mount (setscrew)

Expansion Option

- E - Expansion
- No Suffix - Non Expansion

Bore Size (Inch)

- First Digit - Number of Inches
- Second & Third Digit - Number of 1/16 of inches (ex. 207 = 2 7/16”)

Seal Option

- C - Contact Seal
- N - Nomex Seal

U S RB F E 5000 A E - 207 - C

*__Housing Type__

- RB - Roller (Pillow) Block
- FB - Flange Block
- FC - Flange Cartridge
- TA - Top Angle Take Up
- TU - Wide Slot Take-Up
- BF - Flange Bracket
- I - Insert

Features and Benefits

Double Row Spherical Roller Bearing

New geometries developed and manufactured by Sealmaster result in an innovative double-row spherical roller bearing with optimal load capacity, misalignment and speed capability.

Multiple Housing Configurations

One Piece Cast Iron and Ductile Iron Housings

Durable one piece cast iron (USRB5000 series) and ductile iron (USRBE5000 series) housings provide load support. Two and four bolt pillow block housings have elongated bolt holes for interchangeability with competitive units.

Split Housings

Durable split housings (USRB5500 series) designed to the industry standard SAF footprint and replaceable cartridge inserts from 1 3/8”- 8” are shaft ready for easy installation.

Multiple Sealing Options

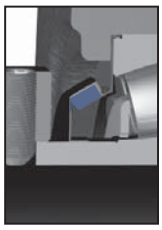

Felt Seal

The Sealmaster felt seal with flinger, mounted between races, can accommodate +/-2˚ of misalignment. The outer member rotates with the inner race to help direct contamination away from the seal. Due to the unique spherical geometric design of the seal contact areas, sealing effectiveness is maintained throughout the entire specified range of misalignment. This design provides a tight labyrinth seal, which acts as a filter to help exclude foreign material and has low friction.

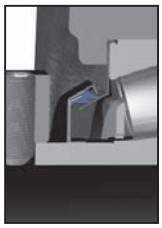

Contact Seal

The Sealmaster double-lip contact seal, mounted between races, also can accommodate +/-2˚ of misalignment. The outer member rotates with the inner race, to help direct contamination away from the seal. Due to the unique spherical geometric design of the seal contact areas, sealing effectiveness is maintained throughout the entire specified range of misalignment. The rotating double-lip seal design allows for exceptional limiting speed.

Features and Benefits

Multiple Locking Methods

Collar Mount System

Sealmaster performance mounted roller bearings feature locking collars and setscrews at 120°, providing a balanced three-point contact.

Adapter Mount System

The Sealmaster performance mounted roller bearings grip the shaft with an advanced adapter mount system, for fast installation and removal. The advanced integral locking system incorporates axial cap screws that allow mount and dismount of the bearing from one side. The result: this highly engineered locking system requires less installation torque. Sealmaster adapter mount spherical roller bearings are also shaft ready and require only a hex key and torque wrench to install; no special tools or feeler gauges are required.

Learn more with your phone...Snap the QR code with your mobile phone, and watch a video demonstrating the ease of installation and removal of the Sealmaster Unitized Spherical Bearing. New-model phones come with QR readers. If yours doesn't, go to the app store and search QR Reader.

Replaceable Cartridge Insert

The Sealmaster performance mounted roller bearings have a replaceable cartridge insert that consists of a double-row spherical roller bearing with race-mounted seals. These integrally sealed, one-piece cartridge inserts can also be used for mounting in cylindrical-bore housings for an even wider range of applications.

Wide Outer Race

The wide outer race, coupled with innovative rolling-element geometries, provides increased load capacity. The wide outer race also allows for race mounted seals and creates a large internal grease chamber, for more grease capacity.

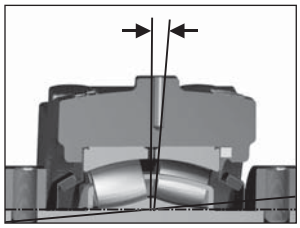

Misalignment

The arrangement of rolling elements and races in Sealmaster Mounted Spherical Roller Bearings can accommodate +/-2 degrees of misalignment – up to twice an SAF – while maintaining catalog load ratings and sealing effectiveness. The spherical bearing design can accommodate both static and dynamic misalignment which may exist due to structure mounting irregularities, shaft deflection, or other application conditions.

Rolling Elements: Spherical Roller

Housing: Cast Iron Two Bolt Pillow Block

Self Alignment: +/- 2 Degrees

Lock: Setscrew

Seal: Felt

Optional Seal: Double Lip Contact

Temperature: -20° to 220° F

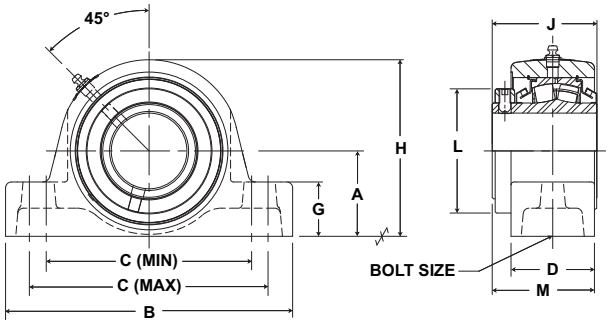

USRB5000 Series Two-Bolt Base Pillow Blocks - Collar Mount

Bore Diameter inch	Part No.	Basic Dynamic Rating lb/N	Dimensions inch / mm A	B	C Min.	C Max.	D	G	H	J	L	M *	Bolt Size	Unit Wt. lb/kg
1 1/8	USRB5000-102	20368	1 3/4	6 5/16	4 1/2	5	2 3/16	1 1/16	3 3/4	2 3/4	2 49/64	2 3/4	3/8	6.9
1 3/16	USRB5000-103	90597	44.5	160.3	114.3	127.0	55.6	27.0	95.3	69.9	70.2	69.9		3.14
1 1/4	USRB5000-104													
1 7/16	USRB5000-107	20368	1 7/8	6 7/8	4 11/16	5 5/16	2 3/16	1 3/16	3 7/8	2 3/4	2 49/64	2 3/4	1/2	6.6
1 1/2	USRB5000-108	90597	47.6	174.6	119.1	134.9	55.6	30.2	98.4	69.9	70.2	69.9		3.00
1 11/16	USRB5000-111	22689	2 1/8	7 3/8	5 3/16	5 13/16	2 3/16	1 5/16	4 1/4	2 7/8	2 3/4	2 13/16	1/2	7.8
1 3/4	USRB5000-112	100921	54.0	187.3	131.8	147.6	55.6	33.3	108.0	73.0	69.9	71.4		3.55
1 15/16	USRB5000-115	23520	2 1/4	8 3/8	5 15/16	6 9/16	2 3/16	1 3/8	4 9/16	2 7/8	3	2 25/32	5/8	7.7
2	USRB5000-200	104617	57.2	212.7	150.8	166.7	55.6	34.9	115.9	73.0	76.2	70.6		5.23
2 3/16	USRB5000-203	28087	2 1/2	8 7/8	6 9/16	7 1/16	2 7/16	1 5/8	5	3 1/8	3 1/4	3 1/8	5/8	11.5
		124931	63.5	225.4	166.7	179.4	61.9	41.3	127.0	79.4	82.6	79.4		5.23
2 7/16	USRB5000-207	44691	2 3/4	9 1/4	6 13/16	7 7/16	2 11/16	1 3/4	5 11/16	3 3/8	4	3 9/32	5/8	16.0
2 1/2	USRB5000-208	198786	69.9	235.0	173.0	188.9	68.3	44.5	144.5	85.7	101.6	83.3		7.27
2 11/16	USRB5000-211													
2 3/4	USRB5000-212	47447	3 1/4	10 7/16	7 13/16	8 7/16	2 13/16	2 1/4	6 7/16	3 7/8	4 17/32	3 3/4	3/4	23.7
2 15/16	USRB5000-215	211044	82.6	265.1	198.4	214.3	71.4	57.2	163.5	98.4	115.1	95.3		10.77
3	USRB5000-300													
3 3/16	USRB5000-303	72640	3 3/4	13	9 1/4	10 3/4	3 3/16	2 1/4	7 1/2	4 15/32	5 5/16	4 1/4	7/8	37.1
3 7/16	USRB5000-307	323103	95.3	330.2	235.0	273.1	81.0	57.2	190.5	113.5	134.9	108.0		81.62
3 1/2	USRB5000-308													
3 11/16	USRB5000-311	96050	4 1/8	14 1/4	10	11 3/4	3 9/16	2 1/2	8 7/16	4 15/16	6	4 23/32	1	49.9
3 15/16	USRB5000-315	427230	104.8	362.0	254.0	298.5	90.5	63.5	214.3	125.4	152.4	119.9		22.68
4	USRB5000-400													

*For expansion bearings, this dimension can increase by the corresponding value in table VIII on page I-69.

Metric dimensions for reference only.
Not all parts are available from stock. Please contact customer service for availability (800) 626-2120.
For more information on bearing capabilities outside of our standard offering, please contact Application Engineering (800) 626-2093.

Rolling Elements: Spherical Roller

Housing: Cast Iron Two Bolt Pillow Block

Self Alignment: +/- 2 Degrees

Lock: Adapter

Seal: Felt

Optional Seal: Double Lip Contact

Temperature: -20° to 220° F

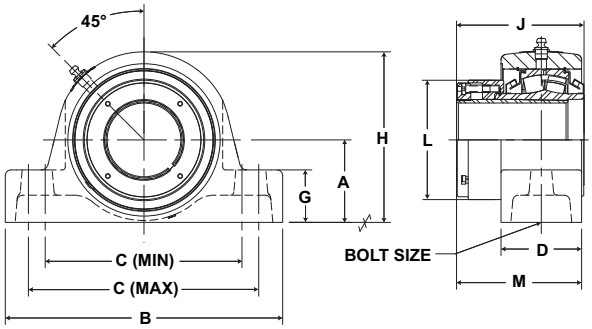

USRB5000A Series Two-Bolt Base Pillow Blocks - Adapter Mount

Bore Diameter inch	Part No.	Basic Dynamic Rating lb/N	Dimensions inch / mm										Unit Wt. lb/kg
			A	B	C Min.	C Max.	D	G	H	J	L	M *	Bolt Size	
1 1/8	USRB5000A-102	20368	1 3/4	6 5/16	4 1/2	5	2 3/16	1 1/16	3 3/4	3 11/32	2 47/64	3 11/32	3/8	6.9
1 3/16	USRB5000A-103	90597	44.5	160.3	114.3	127.0	55.6	27.0	95.3	84.9	69.5	84.9		3.12
1 1/4	USRB5000A-104													
1 7/16	USRB5000A-107	20368	1 7/8	6 7/8	4 11/16	5 5/16	2 3/16	1 3/16	3 7/8	3 11/32	2 47/64	3 11/32	1/2	6.9
1 1/2	USRB5000A-108	90597	47.6	174.6	119.1	134.9	55.6	30.2	98.4	84.9	69.5	84.9		3.12
1 11/16	USRB5000A-111	22689	2 1/8	7 3/8	5 3/16	5 13/16	2 3/16	1 5/16	4 1/4	3 29/64	2 31/32	3 3/8	1/2	8.3
1 3/4	USRB5000A-112	100921	54.0	187.3	131.8	147.6	55.6	33.3	108.0	87.7	75.4	85.7		3.77
1 15/16	USRB5000A-115	23520	2 1/4	8 3/8	5 15/16	6 9/16	2 3/16	1 3/8	4 9/16	3 1/2	3 11/64	3 13/32	5/8	10.1
2	USRB5000A-200	104617	57.2	212.7	150.8	166.7	55.6	34.9	115.9	88.9	80.6	86.5		4.58
2 3/16	USRB5000A-203	28087	2 1/2	8 7/8	6 9/16	7 1/16	2 7/16	1 5/8	5	3 7/8	3 7/16	3 27/32	5/8	12.2
		124931	63.5	225.4	166.7	179.4	61.9	41.3	127.0	98.4	87.3	97.6		5.53
2 7/16	USRB5000A-207	44691	2 3/4	9 1/4	6 13/16	7 7/16	2 11/16	1 3/4	5 11/16	4 5/16	3 63/64	4 7/32	5/8	17.3
2 1/2	USRB5000A-208	198786	69.9	235.0	173.0	188.9	68.3	44.5	144.5	109.5	101.2	107.2		7.86
2 11/16	USRB5000A-211													
2 3/4	USRB5000A-212	47447	3 1/4	10 7/16	7 13/16	8 7/16	2 13/16	2 1/4	6 7/16	4 31/64	4 25/64	4 3/8	3/4	23.8
2 15/16	USRB5000A-215	211044	82.6	265.1	198.4	214.3	71.4	57.2	163.5	113.9	111.5	111.1		10.82
3	USRB5000A-300													
3 3/16	USRB5000A-303	72640	3 3/4	13	9 1/4	10 3/4	3 3/16	2 1/4	7 1/2	5 35/64	5 15/32	5 21/64	7/8	39.1
3 7/16	USRB5000A-307	323103	95.3	330.2	235.0	273.1	81.0	57.2	190.5	140.9	138.9	135.3		17.76
3 1/2	USRB5000A-308													
3 11/16	USRB5000A-311	96050	4 1/8	14 1/4	10	11 3/4	3 9/16	2 1/2	8 7/16	5 15/16	5 13/16	5 23/32	1	50.6
3 15/16	USRB5000A-315	427230	104.8	362.0	254.0	298.5	90.5	63.5	214.3	150.8	147.6	145.3		23.01
4	USRB5000A-400													

*For expansion bearings, this dimension can increase by the corresponding value in table VIII on page I-69.
One expansion unit is to be used in conjunction with one non-expansion unit for applications using an adapter lock unit
Failure to utilize one expansion and one non-expansion unit is likely to result in reduced bearing performance.

Rolling Elements: Spherical Roller

Housing: Cast Iron Four Bolt Pillow Block

Self Alignment: +/- 2 Degrees

Lock: Setscrew

Seal: Felt

Optional Seal: Double Lip Contact

Temperature: -20° to 220° F

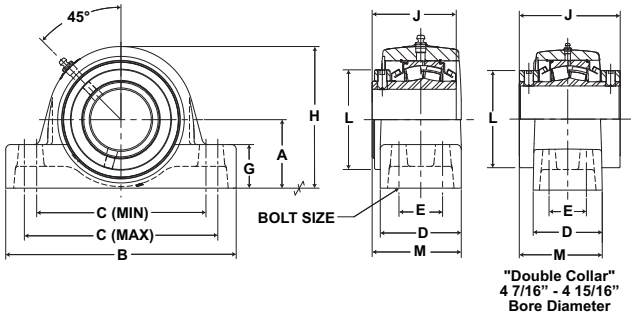

USRBF5000 Series Four-Bolt Base Pillow Blocks - Collar Mount

Bore Diameter inch	Part No.	Basic Dynamic Rating lb/N	Dimensions inch / mm A	B	C Min.	C Max.	D	E	G	H	J	L	M *	Bolt Size	Unit Wt. lb/kg
2 7/16	USRBF5000-207	44691	2 3/4	9 1/4	6 7/8	7 5/8	3 1/4	1 3/4	1 3/4	5 11/16	3 3/8	4	3 11/16	1/2	17.6
2 1/2	USRBF5000-208	198786	69.9	235.0	174.6	193.7	82.6	44.5	44.5	144.5	85.7	101.6	93.7		8.00
2 11/16	USRBF5000-211														
2 3/4	USRBF5000-212	47447	3 1/4	10 7/16	7 7/8	8 3/8	3 3/4	1 7/8	2 1/4	6 7/16	3 7/8	4 17/32	4 19/64	5/8	26.4
2 15/16	USRBF5000-215	211044	82.6	265.1	200.0	212.7	95.3	47.6	57.2	163.5	98.4	115.1	109.1		11.98
3	USRBF5000-300														
3 3/16	USRBF5000-303														
3 7/16	USRBF5000-307	72640	3 3/4	13	9 1/4	10 3/4	3 7/8	2	2 1/4	7 1/2	4 15/32	5 5/16	4 19/32	3/4	39.0
3 1/2	USRBF5000-308	323103	95.3	330.2	235.0	273.1	98.4	50.8	57.2	190.5	113.5	134.9	116.7		17.73
3 11/16	USRBF5000-311														
3 15/16	USRBF5000-315	96050	4 1/4	15 1/4	11	13	4 1/2	2 1/4	2 5/8	8 9/16	4 15/16	6	5 7/32	3/4	57.5
4	USRBF5000-400	427230	108.0	387.4	279.4	330.2	114.3	57.2	66.7	217.5	125.4	152.4	132.6		26.14
4 7/16	USRB5000-407	111537	4 3/4	16 1/16	13	14	4 5/8	2 1/2	2 3/4	9 3/8	6 3/4	6 1/2	5 1/2	3/4	74.1
4 1/2	USRB5000-408	496117	120.7	408.0	330.2	355.6	117.5	63.5	69.9	238.1	171.5	165.1	139.7		33.68
4 15/16	USRB5000-415	158816	5 1/2	18 1/2	15	16	5 1/8	2 3/4	3	10 7/8	7 27/64	7 1/2	6 3/32	3/4	112.6
		706414	139.7	469.9	381.0	406.4	130.2	69.9	76.2	276.2	188.5	190.5	154.8		51.18

*For expansion bearings, this dimension can increase by the corresponding value in table VIII on page I-69.

Note: Bore diameters up to 4" available in single lock collar. Bore diameters 4 7/16" and up available in double lock collar.

Metric dimensions for reference only.

Not all parts are available from stock. Please contact customer service for availability (800) 626-2120.

For more information on bearing capabilities outside of our standard offering, please contact Application Engineering (800) 626-2093.

Rolling Elements: Spherical Roller
Housing: Cast Iron Four Bolt Pillow Block
Self Alignment: +/- 2 Degrees
Lock: Adapter
Seal: Felt
Optional Seal: Double Lip Contact
Temperature: -20° to 220° F

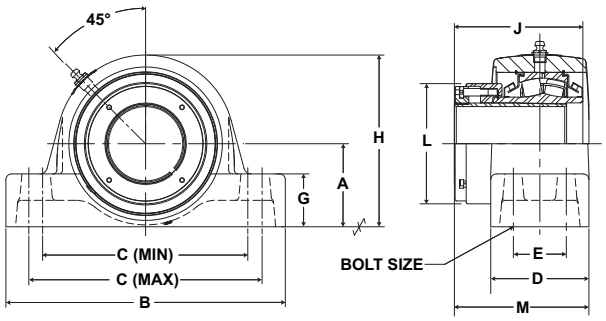

USRBF5000A Series Four-Bolt Base Pillow Blocks - Adapter Mount

Bore Diameter inch	Part No.	Basic Dynamic Rating lb/N	Dimensions inch / mm												Unit Wt. lb/kg
			A	B	C Min.	C Max.	D	E	G	H	J	L	M *	Bolt Size	
2 7/16	USRBF5000A-207	44691	2 3/4	9 1/4	6 7/8	7 5/8	3 1/4	1 3/4	1 3/4	5 11/16	4 5/16	3 63/64	4 39/64	1/2	18.5
2 1/2	USRBF5000A-208	198786	69.9	235.0	174.6	193.7	82.6	44.5	44.5	144.5	109.5	101.2	117.1		8.42
2 11/16	USRBF5000A-211														
2 3/4	USRBF5000A-212	47447	3 1/4	10 7/16	7 7/8	8 3/8	3 3/4	1 7/8	2 1/4	6 7/16	4 31/64	4 25/64	4 29/32	5/8	26.4
2 15/16	USRBF5000A-215	211044	82.6	265.1	200.0	212.7	95.3	47.6	57.2	163.5	113.9	111.5	124.6		12.02
3	USRBF5000A-300														
3 3/16	USRBF5000A-303														
3 7/16	USRBF5000A-307	72640	3 3/4	13	9 1/4	10 3/4	3 7/8	2	2 1/4	7 1/2	5 35/64	5 15/32	5 11/16	3/4	41.0
3 1/2	USRBF5000A-308	323103	95.3	330.2	235.0	273.1	98.4	50.8	57.2	190.5	140.9	138.9	144.5		18.63
3 11/16	USRBF5000A-311														
3 15/16	USRBF5000A-315	96050	4 1/4	15 1/4	11	13	4 1/2	2 1/4	2 5/8	8 9/16	5 15/16	5 13/16	6 13/64	3/4	58.2
4	USRBF5000A-400	427230	108.0	387.4	279.4	330.2	114.3	57.2	66.7	217.5	150.8	147.6	157.6		26.47
4 7/16	USRB5000A-407	111537	4 3/4	16 1/16	13	14	4 5/8	2 1/2	2 3/4	9 3/8	6 27/64	6 11/32	6 31/64	3/4	68.2
4 1/2	USRB5000A-408	496117	120.7	408.0	330.2	355.6	117.5	63.5	69.9	238.1	163.1	161.1	164.7		31.01
4 15/16	USRB5000A-415	158816	5 1/2	18 1/2	15	16	5 1/8	2 3/4	3	10 7/8	7 1/8	7 13/64	7 3/32	7/8	107.8
5	USRB5000A-500	706414	139.7	469.9	381.0	406.4	130.2	69.9	76.2	276.2	181.0	183.0	180.2		48.99

*For expansion bearings, this dimension can increase by the corresponding value in table VIII on page I-69.
One expansion unit is to be used in conjunction with one non-expansion unit for applications using an adapter lock unit
Failure to utilize one expansion and one non-expansion unit is likely to result in reduced bearing performance.

SEALMASTER® Performance Mounted Spherical Roller Bearings

Rolling Elements: Spherical Roller

Housing: Cast Iron Two and Four Bolt Pillow Block

Self Alignment: +/- 2 Degrees

Lock: Setscrew

Seal: Felt

Optional Seal: Double Lip Contact

Temperature: -20° to 220° F

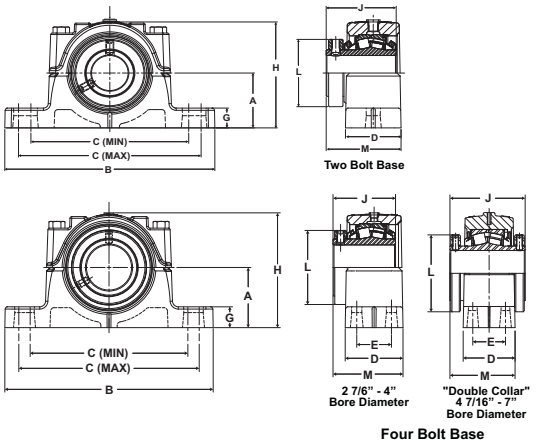

USRB5500 Series Two and Four-Bolt Base Pillow Blocks - Collar Mount, SAF Mounting Dimensions

Bore Diameter	Part No.		Basic Dynamic Rating lb/N	Dimensions inch / mm													Unit Wt. lb/kg	
				A	B	C		D	E	G	H	J	L	M *	Bolt Size			
inch	2 Bolt	4 Bolt				Min.	Max.								2 Bolt	4 Bolt	2 Bolt	4 Bolt
1 7/16	USRB5509-107	-	20368	2 1/4	8 1/4	6 1/4	7	2 3/16	-	13/16	4 3/8	2 3/4	2 49/64	2 61/64	1/2	-	10.2	-
1 1/2	USRB5509-108		90597	57.2	209.6	158.8	177.8	55.6		20.6	111.1	69.9	70.2	75.0			4.64	
1 15/16	USRB5511-115	-	23520	2 3/4	9 5/8	7 3/8	8 1/4	2 3/4	-	15/16	5 1/32	2 7/8	3	3 19/64	5/8	-	13.8	-
2	USRB5511-200		104617	69.9	244.5	187.3	209.6	69.9		23.8	127.8	73.0	76.2	83.7			6.27	
2 7/16	USRB5515-207	USRBF5515-207	44691	3 1/4	11 1/4	8 5/8	9 5/8	3 1/8	1 7/8	1 1/8	6 1/8	3 3/8	4	3 25/32	5/8	1/2	25.2	25.0
2 1/2	USRB5515-208	USRBF5515-208	198786	82.6	285.8	219.1	244.5	79.4	47.6	28.6	155.6	85.7	101.6	96.0			11.46	11.34
2 15/16	USRB5517-215	USRBF5517-215	47447	3 3/4	13	9 7/8	11	3 1/2	2 1/8	1 1/4	7 1/8	3 7/8	4 17/32	4 13/32	3/4	5/8	38.2	37.8
3	USRB5517-300	USRBF5517-300	211044	95.3	330.2	250.8	279.4	88.9	54.0	31.8	181.0	98.4	115.1	111.9			17.38	17.20
3 7/16	USRB5520-307	USRBF5520-307	72640	4 1/2	15 1/4	11 5/8	13 1/8	4 3/8	2 3/8	1 3/4	9	4 15/32	5 5/16	5 9/64	7/8	3/4	71.4	70.5
3 1/2	USRB5520-308	USRBF5520-308	323103	114.3	387.4	295.3	333.4	111.1	60.3	44.5	228.6	113.5	134.9	130.6			32.47	32.02
3 15/16	-	USRB5522-315	96050	4 15/16	16 1/2	12 19/32	14 1/2	4 3/4	2 3/4	2	9 7/8	4 15/16	6	5 41/64	-	3/4	-	87.7
4		USRB5522-400	427230	125.4	419.1	319.9	368.3	120.7	69.9	50.8	250.8	125.4	152.4	143.3				39.86
4 7/16	-	USRB5526-407	111537	6	18 3/8	14 1/2	16	5 1/8	3 1/4	2 3/8	11 9/16	6 3/4	6 1/2	6 1/8	-	7/8	-	133.2
4 1/2		USRB5526-408	496117	152.4	466.7	368.3	406.4	130.2	82.6	60.3	293.7	171.5	165.1	155.6				60.57
4 15/16	-	USRB5528-415	158816	6	19 11/16	15 5/8	17 3/8	5 7/8	3 3/8	2 3/8	12	7 27/64	7 1/2	6 27/32	-	1	-	164.1
			706414	152.4	500.1	396.9	441.3	149.2	85.7	60.3	304.8	188.5	190.5	173.8				74.61
5 7/16	-	USRB5532-507	196682	6 11/16	22	17 3/8	19 1/4	6 1/4	3 3/4	2 5/8	13 1/2	9 1/32	8 1/2	7 27/32	-	1	-	229.0
			874842	169.9	558.8	441.3	489.0	158.8	95.3	66.7	342.9	229.4	215.9	199.2				104.09
5 15/16	-	USRB5534-515	261346	7 1/16	24 3/4	19 3/8	21 5/8	6 3/4	4 1/4	2 3/4	14 15/16	9 25/32	10	8 15/32	-	1	-	313.0
			1162467	179.4	628.7	492.1	549.3	171.5	108.0	69.9	379.4	248.4	254.0	215.1				142.27
6 7/16	-	USRB5536-607	334229	7 1/2	26 3/4	20 7/8	23 5/8	7 1/8	4 5/8	3	15 15/16	10 1/2	11	9 1/64	-	1	-	391.0
6 1/2		USRB5536-608	1486651	190.5	679.5	530.2	600.1	181.0	117.5	76.2	404.8	266.7	279.4	229.0				177.73
6 15/16	-	USRB5538-615	363818	7 7/8	28	21 5/8	24 3/8	7 1/2	4 1/2	3 1/8	16 9/16	10 1/2	11	9 13/64	-	1 1/4	-	435.0
7		USRB5538-700	1618262	200.0	711.2	549.3	619.1	190.5	114.3	79.4	420.7	266.7	279.4	233.8				197.71

*For expansion bearings, this dimension can decrease by the corresponding value in table VIII on page I-69.
Note: Bore diameters up to 4" available in single lock collar. Bore diameters 4 7/16" and up available in double lock collar
Bore diameters up to 3" - grease fitting location at 12:00.

Metric dimensions for reference only.
Not all parts are available from stock. Please contact customer service for availability (800) 626-2120.
For more information on bearing capabilities outside of our standard offering, please contact Application Engineering (800) 626-2093.

Performance Mounted Spherical Roller Bearings

SEALMASTER®

Rolling Elements: Spherical Roller

Housing: Cast Iron Two and Four Bolt Pillow Block

Self Alignment: +/- 2 Degrees

Lock: Adapter

Seal: Felt

Optional Seal: Double Lip Contact

Temperature: -20° to 220° F

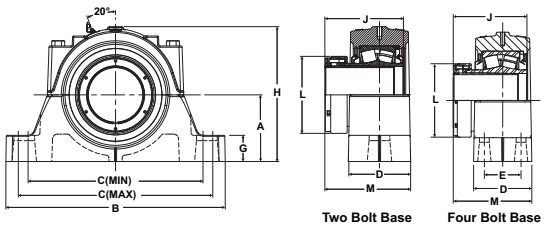

USRB5500A Series Two and Four-Bolt Base Pillow Blocks - Adapter Mount, SAF Mounting Dimensions

Bore Diameter	Part No.		Basic Dynamic Rating lb/N	Dimensions inch / mm													Unit Wt. lb/kg	
				A	B	C		D	E	G	H	J	L	M *	Bolt Size			
inch	2 Bolt	4 Bolt				Min.	Max.								2 Bolt	4 Bolt	2 Bolt	4 Bolt
1 7/16 1 1/2	USRB5509A-107 USRB5509A-108	-	20368 90597	2 1/4 57.2	8 1/4 209.6	6 1/4 158.8	7 177.8	2 3/16 55.6	-	13/16 20.6	4 3/8 111.1	3 11/32 84.9	2 47/64 69.5	3 35/64 90.1	1/2	-	10.5 4.77	-
1 15/16 2	USRB5511A-115 USRB5511A-200	-	23520 104617	2 3/4 69.9	9 5/8 244.6	7 3/8 187.3	8 1/4 209.6	2 3/4 69.9	-	15/16 23.8	5 1/32 127.8	3 1/2 88.9	3 11/64 80.6	3 29/32 99.2	5/8	-	16.2 7.36	-
2 7/16 2 1/2	USRB5515A-207 USRB5515A-208	USRBF5515A-207 USRBF5515A-208	44691 198786	3 1/4 82.6	11 1/4 285.8	8 5/8 219.1	9 5/8 244.5	3 1/8 79.4	1 7/8 47.6	1 1/8 28.6	6 1/8 155.6	4 5/16 109.5	3 7/16 87.3	4 23/32 119.9	5/8	1/2	26.5 12.04	26.2 11.92
2 15/16 3	USRB5517A-215 USRB5517A-300	USRBF5517A-215 USRBF5517A-300	47447 211044	3 3/4 95.3	13 330.2	9 7/8 250.8	11 279.4	3 1/2 88.9	2 1/8 54.0	1 1/4 31.8	7 1/8 181.0	4 31/64 113.9	4 25/64 111.5	5 1/32 127.8	3/4	5/8	38.4 17.44	38.0 17.26
3 7/16 3 1/2	USRB5520A-307 USRB5520A-308	USRBF5520A-307 USRBF5520A-308	72640 323103	4 1/2 114.3	15 1/4 387.4	11 5/8 295.3	13 1/8 333.4	4 3/8 111.1	2 3/8 60.3	1 3/4 44.5	9 228.6	5 35/64 140.9	5 15/32 138.9	6 15/64 158.4	7/8	3/4	73.4 33.37	72.4 32.92
3 15/16 4	-	USRB5522A-315 USRB5522A-400	96050 427230	4 15/16 125.4	16 1/2 419.1	12 19/32 319.9	14 1/2 368.3	4 3/4 120.7	2 3/4 69.9	2 50.8	9 7/8 250.8	5 15/16 150.8	5 13/16 147.64	6 41/64 168.7	-	3/4	-	88.5 40.23
4 7/16 4 1/2	-	USRB5526A-407 USRB5526A-408	111537 496117	6 152.4	18 3/8 466.7	14 1/2 368.3	16 406.4	5 1/8 130.2	3 1/4 82.6	2 3/8 60.3	11 9/16 293.7	6 27/64 163.1	6 11/32 161.1	7 3/32 180.2	-	7/8	-	127.4 57.89
4 15/16 5	-	USRB5528A-415 USRB5528A-500	158816 706414	6 152.4	19 11/16 500.1	15 5/8 396.9	17 3/8 441.3	5 7/8 149.2	3 3/8 85.7	2 3/8 60.3	12 304.8	7 1/8 181.0	7 13/64 183.0	7 53/64 198.8	-	1	-	159.3 72.41
5 7/16	-	USRB5532A-507	196682 874842	6 11/16 169.9	22 558.8	17 3/8 441.3	19 1/4 489.0	6 1/4 158.8	3 3/4 95.3	2 5/8 66.7	13 1/2 342.9	7 7/8 200.0	7 47/64 196.5	8 19/32 218.3	-	1	-	214.0 97.27
5 15/16	-	USRB5534A-515	261346 1162467	7 1/16 179.4	24 3/4 628.7	19 3/8 492.1	21 5/8 549.3	6 3/4 171.5	4 1/4 108.0	2 3/4 69.9	14 15/16 379.4	8 11/16 220.7	8 1/2 215.9	9 1/4 235.0	-	1	-	287.0 130.45
6 7/16 6 1/2	-	USRB5536A-607 USRB5536A-608	334229 1486651	7 1/2 190.5	26 3/4 679.5	20 7/8 530.2	23 5/8 600.1	7 1/8 181.0	4 5/8 117.5	3 76.2	15 15/16 404.8	9 45/64 246.5	9 11/16 246.1	10 5/32 258.0	-	1	-	357.0 162.27
6 15/16 7	-	USRB5538A-615 USRB5538A-700	334229 1486651	7 7/8 200.0	28 711.2	21 5/8 549.3	24 3/8 619.1	7 1/2 190.5	4 1/2 114.3	3 1/8 79.4	16 9/16 420.7	9 23/32 246.9	9 11/16 246.1	10 11/32 262.7	-	1 1/4	-	405.0 184.09
7 1/2 7 15/16 8	-	USRB5544A-708 USRB5544A-715 USRB5544A-800	363818 1618262	9 1/2 241.3	32 3/4 831.9	24 3/4 628.7	27 7/8 708.0	8 3/4 222.3	5 1/4 133.4	3 3/4 95.3	19 5/8 498.5	10 9/16 268.3	11 7/64 282.2	11 17/32 292.9	-	1 1/2	-	656.0 298.18

*For expansion bearings, this dimension can decrease by the corresponding value in table VIII on page I-69.
Bore diameters up to 3" - grease fitting location at 12:00.
One expansion unit is to be used in conjunction with one non-expansion unit for applications using an adapter lock unit
Failure to utilize one expansion and one non-expansion unit is likely to result in reduced bearing performance.

Rolling Elements: Spherical Roller
Housing: Cast Iron Four Bolt Flange
Self Alignment: +/- 2 Degrees
Lock: Setscrew
Seal: Felt
Optional Seal: Double Lip Contact
Temperature: -20° to 220° F

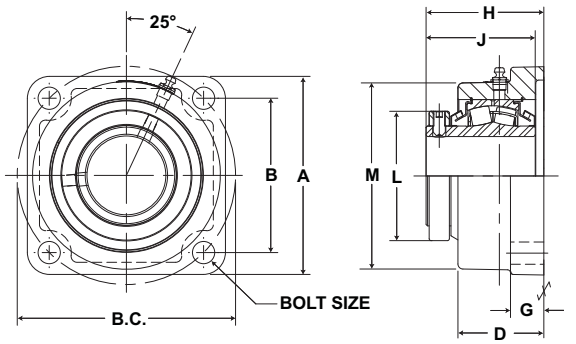

USFB5000 Series Four-Bolt Flange Units - Collar Mount

Bore Diameter inch	Part No.	Basic Dynamic Rating lb/N	Dimensions inch / mm A	B	B.C.	D	G	H *	J	L	M	Bolt Size	Unit Wt. lb/kg
1 7/16 1 1/2	USFB5000-107 USFB5000-108	20368 90597	4 5/8 117.5	3 17/32 89.7	5 127.0	2 1/16 52.4	3/4 19.1	2 53/64 71.8	2 3/4 69.9	2 49/64 70.2	3 7/8 98.4	1/2	6.4 2.93
1 11/16 1 3/4	USFB5000-111 USFB5000-112	22689 100921	5 127.0	3 57/64 98.8	5 1/2 139.7	2 1/4 57.2	3/4 19.1	2 61/64 75.0	2 7/8 73.0	2 3/4 69.9	4 1/2 114.3	1/2	8.4 3.82
1 15/16 2	USFB5000-115 USFB5000-200	23520 104617	5 3/16 131.8	4 1/16 103.2	5 3/4 146.1	2 1/4 57.2	3/4 19.1	2 61/64 75.0	2 7/8 73.0	3 76.2	4 3/4 120.7	1/2	8.9 4.04
2 3/16	USFB5000-203	28087 124931	5 7/8 149.2	4 1/2 114.3	6 3/8 161.9	2 7/16 61.9	13/16 20.6	3 7/32 81.8	3 1/8 79.4	3 1/4 82.6	5 1/8 130.2	5/8	11.3 5.13
2 7/16 2 1/2	USFB5000-207 USFB5000-208	44691 198786	6 1/8 155.6	4 49/64 121.0	6 3/4 171.5	2 21/32 67.5	1 1/32 26.2	3 31/64 88.5	3 3/8 85.7	4 101.6	5 3/4 146.1	5/8	15.3 6.95
2 11/16 2 3/4 2 15/16 3	USFB5000-211 USFB5000-212 USFB5000-215 USFB5000-300	47447 211044	7 3/16 182.6	5 9/16 141.3	7 7/8 200.0	2 7/8 73.0	15/16 23.8	3 63/64 101.2	3 7/8 98.4	4 17/32 115.1	6 5/8 168.3	3/4	23.1 10.50
3 3/16 3 7/16 3 1/2	USFB5000-303 USFB5000-307 USFB5000-308	72640 323103	8 3/8 212.7	6 23/32 170.7	9 1/2 241.3	3 9/32 83.3	1 1/8 28.6	4 19/32 116.7	4 15/32 113.5	5 5/16 134.9	7 5/8 193.7	3/4	36.0 16.38
3 11/16 3 15/16 4	USFB5000-311 USFB5000-315 USFB5000-400	96050 427230	9 1/2 241.3	7 19/32 192.9	10 3/4 273.1	3 11/16 93.7	1 1/4 31.8	5 5/64 129.0	4 15/16 125.4	6 152.4	8 7/8 225.4	7/8	46.1 20.98

*For expansion bearings, this dimension can increase by the corresponding value in table VIII on page I-69.

Metric dimensions for reference only.
Not all parts are available from stock. Please contact customer service for availability (800) 626-2120.
For more information on bearing capabilities outside of our standard offering, please contact Application Engineering (800) 626-2093.

Rolling Elements: Spherical Roller
Housing: Cast Iron Four Bolt Flange
Self Alignment: +/- 2 Degrees
Lock: Adapter
Seal: Felt
Optional Seal: Double Lip Contact
Temperature: -20° to 220° F

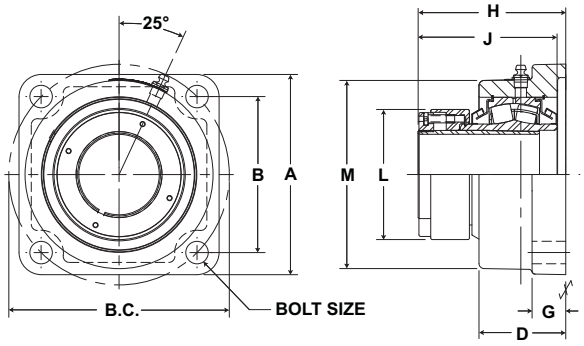

USFB5000A Series Four-Bolt Flange Units - Adapter Mount

Bore Diameter inch	Part No.	Basic Dynamic Rating lb/N	Dimensions inch / mm										Unit Wt. lb/kg
			A	B	B.C.	D	G	H *	J	L	M	Bolt Size	
1 7/16 1 1/2	USFB5000A-107 USFB5000A-108	20368 90597	4 5/8 117.5	3 17/32 89.7	5 127.0	2 1/16 52.4	3/4 19.1	3 7/16 87.3	3 11/32 84.9	2 47/64 69.5	3 7/8 98.4	1/2	6.7 3.06
1 11/16 1 3/4	USFB5000A-111 USFB5000A-112	22689 100921	5 127.0	3 57/64 98.8	5 1/2 139.7	2 1/4 57.2	3/4 19.1	3 35/64 90.1	3 29/64 87.7	2 31/32 75.4	4 1/2 114.3	1/2	8.9 4.04
1 15/16 2	USFB5000A-115 USFB5000A-200	23520 104617	5 3/16 131.8	4 1/16 103.2	5 3/4 146.1	2 1/4 57.2	3/4 19.1	3 37/64 90.9	3 1/2 88.9	3 11/64 80.6	4 3/4 120.7	1/2	9.5 4.33
2 3/16	USFB5000A-203	28087 124931	5 7/8 149.2	4 1/2 114.3	6 3/8 161.9	2 7/16 61.9	13/16 20.6	3 31/32 100.8	3 7/8 98.4	3 7/16 87.3	5 1/8 130.2	5/8	11.9 5.42
2 7/16 2 1/2	USFB5000A-207 USFB5000A-208	44691 198786	6 1/8 155.6	4 49/64 121.0	6 3/4 171.5	2 21/32 67.5	1 1/32 26.2	4 13/32 111.9	4 5/16 109.5	3 63/64 101.2	5 3/4 146.1	5/8	16.2 7.37
2 11/16 2 3/4 2 15/16 3	USFB5000A-211 USFB5000A-212 USFB5000A-215 USFB5000A-300	47447 211044	7 3/16 182.6	5 9/16 141.3	7 7/8 200.0	2 7/8 73.0	15/16 23.8	4 19/32 116.7	4 31/64 113.9	4 25/64 111.5	6 5/8 168.3	3/4	23.2 10.54
3 3/16 3 7/16 3 1/2	USFB5000A-303 USFB5000A-307 USFB5000A-308	72640 323103	8 3/8 212.7	6 23/32 170.7	9 1/2 241.3	3 9/32 83.3	1 1/8 28.6	5 43/64 144.1	5 35/64 140.9	5 15/32 138.9	7 5/8 193.7	3/4	38.0 17.28
3 11/16 3 15/16 4	USFB5000A-311 USFB5000A-315 USFB5000A-400	96050 427230	9 1/2 241.3	7 19/32 192.9	10 3/4 273.1	3 11/16 93.7	1 1/4 31.8	6 5/64 154.4	5 15/16 150.8	5 13/16 147.6	8 7/8 225.4	7/8	46.9 21.32

*For expansion bearings, this dimension can increase by the corresponding value in table VIII on page I-69.
One expansion unit is to be used in conjunction with one non-expansion unit for applications using an adapter lock unit
Failure to utilize one expansion and one non-expansion unit is likely to result in reduced bearing performance.

Rolling Elements: Spherical Roller

Housing: Cast Iron Piloted Flange Cartridge

Self Alignment: +/- 2 Degrees

Lock: Setscrew

Seal: Felt

Optional Seal: Double Lip Contact

Temperature: -20° to 220° F

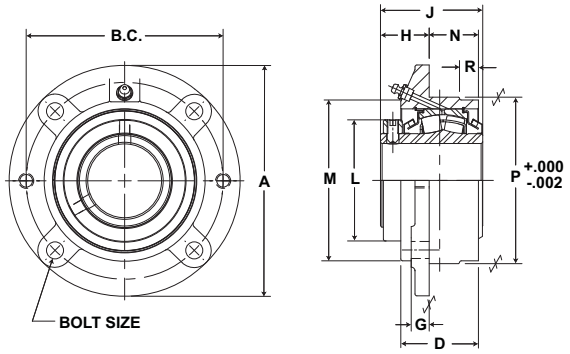

USFC5000 Series Piloted Flange Cartridge Units - Collar Mount

Bore Diameter inch	Part No.	Basic Dynamic Rating lb/N	Dimensions inch / mm												Unit Wt. lb/kg
			A	B.C.	D	G	H *	J	K	M	N *	P	R	Bolt Size	
1 7/16 1 1/2	USFC5000-107 USFC5000-108	20368 91249	5 1/4 133.4	4 3/8 111.1	2 1/16 52.4	15/32 11.9	1 7/16 36.5	2 3/4 69.9	2 49/64 70.2	3 1/2 88.9	1 9/32 32.5	3 5/8 92.1	–	3/8	6.4 2.93
1 11/16 1 3/4	USFC5000-111 USFC5000-112	22689 101647	6 1/8 155.6	5 1/8 130.2	2 1/4 57.2	15/32 11.9	1 27/64 36.1	2 7/8 73.0	2 3/4 69.9	4 101.6	1 7/16 36.5	4 1/4 108.0	9/16 14.3	7/16	7.4 3.37
1 15/16 2	USFC5000-115 USFC5000-200	23520 105370	6 3/8 161.9	5 3/8 136.5	2 1/4 57.2	17/32 13.5	1 25/64 35.3	2 7/8 73.0	3 76.2	4 3/8 111.1	1 15/32 37.3	4 1/2 114.3	5/8 15.9	7/16	8.1 3.70
2 3/16	USFC5000-203	28087 125830	7 1/8 181.0	6 152.4	2 3/8 60.3	17/32 13.5	1 19/32 40.5	3 1/8 79.4	3 1/4 82.6	4 3/4 120.7	1 15/32 37.3	5 127.0	15/32 11.9	1/2	10.2 4.66
2 7/16 2 1/2	USFC5000-207 USFC5000-208	44691 200216	7 5/8 193.7	6 1/2 165.1	2 9/16 65.1	19/32 15.1	1 19/32 40.5	3 3/8 85.7	4 101.6	5 5/16 134.9	1 5/8 41.3	5 1/2 139.7	5/8 15.9	1/2	14.4 6.53
2 11/16 2 3/4 2 15/16 3	USFC5000-211 USFC5000-212 USFC5000-215 USFC5000-300	47447 212563	8 3/4 222.3	7 1/2 190.5	2 7/8 73.0	23/32 18.3	2 50.8	3 7/8 98.4	4 17/32 115.1	6 152.4	1 27/32 46.8	6 3/8 161.9	19/32 15.1	5/8	21.8 9.92
3 3/16 3 7/16 3 1/2	USFC5000-303 USFC5000-307 USFC5000-308	72640 325427	10 1/4 260.4	8 5/8 219.1	3 1/8 79.4	53/64 21.0	2 13/32 61.1	4 15/32 113.5	5 5/16 134.9	7 3/16 182.6	1 27/32 46.8	7 3/8 187.3	5/8 15.9	3/4	33.6 15.25
3 11/16 3 15/16 4	USFC5000-311 USFC5000-315 USFC5000-400	96050 430304	10 7/8 276.2	9 3/8 238.1	3 1/2 88.9	31/32 24.6	2 21/32 67.5	4 15/16 125.4	6 152.4	7 3/4 196.9	2 1/16 52.4	8 1/8 206.4	9/16 14.3	3/4	42.3 19.25

*For expansion bearings, the sum of dimension “H” and “N” can increase by the corresponding value in table VIII on page I-69.

Metric dimensions for reference only.
Not all parts are available from stock. Please contact customer service for availability (800) 626-2120.
For more information on bearing capabilities outside of our standard offering, please contact Application Engineering (800) 626-2093.

Rolling Elements: Spherical Roller
Housing: Cast Iron Piloted Flange Cartridge
Self Alignment: +/- 2 Degrees
Lock: Adapter
Seal: Felt
Optional Seal: Double Lip Contact
Temperature: -20° to 220° F

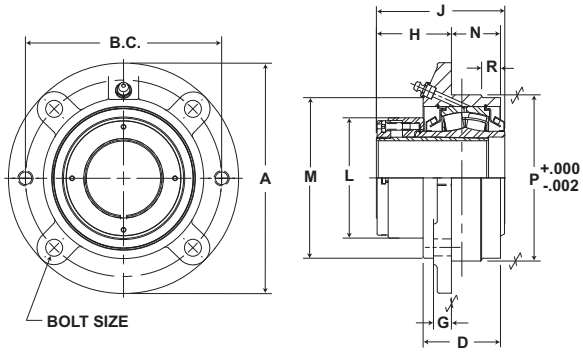

USFC5000A Series Piloted Flange Cartridge Units - Adapter Mount

Bore Diameter inch	Part No.	Basic Dynamic Rating lb/N	Dimensions inch / mm												Unit Wt. lb/kg
			A	B.C.	D	G	H *	J	L	M	N *	P	R	Bolt Size	
1 7/16	USFC5000A-107	20368	5 1/4	4 3/8	2 1/16	15/32	2 3/64	3 11/32	2 47/64	3 1/2	1 9/32	3 5/8	–	3/8	5.6
1 1/2	USFC5000A-108	90597	133.4	111.1	52.4	11.9	52.0	84.9	69.5	88.9	32.5	92.1			2.56
1 11/16	USFC5000A-111	22689	6 1/8	5 1/8	2 1/4	15/32	2	3 29/64	2 31/32	4	1 7/16	4 1/4	9/16	7/16	7.9
1 3/4	USFC5000A-112	100921	155.6	130.2	57.2	11.9	50.8	87.7	75.4	101.6	36.5	108.0	14.3		3.60
1 15/16	USFC5000A-115	23520	6 3/8	5 3/8	2 1/4	17/32	2 1/64	3 1/2	3 11/64	4 3/8	1 15/32	4 1/2	5/8	7/16	8.6
2	USFC5000A-200	104617	161.9	136.5	57.2	13.5	51.2	88.9	80.6	111.1	37.3	114.3	15.9		3.92
2 3/16	USFC5000A-203	28087	7 1/8	6	2 3/8	17/32	2 11/32	3 7/8	3 7/16	4 3/4	1 15/32	5	15/32	1/2	10.9
		124931	181.0	152.4	60.3	13.5	59.5	98.4	87.3	120.7	37.3	127.0	11.9		4.95
2 7/16	USFC5000A-207	44691	7 5/8	6 1/2	2 9/16	19/32	2 17/32	4 5/16	3 63/64	5 5/16	1 5/8	5 1/2	5/8	1/2	15.3
2 1/2	USFC5000A-208	198786	193.7	165.1	65.1	15.1	64.3	109.5	101.2	134.9	41.3	139.7	15.9		6.95
2 11/16	USFC5000A-211														
2 3/4	USFC5000A-212	47447	8 3/4	7 1/2	2 7/8	23/32	2 19/32	4 31/64	4 25/64	6	1 27/32	6 3/8	19/32	5/8	21.9
2 15/16	USFC5000A-215	211044	222.3	190.5	73.0	18.3	65.9	113.9	111.5	152.4	46.8	161.9	15.1		9.97
3	USFC5000A-300														
3 3/16	USFC5000A-303														
3 7/16	USFC5000A-307	72640	10 1/4	8 5/8	3 1/8	53/64	3 1/2	5 35/64	5 15/32	7 3/16	1 27/32	7 3/8	5/8	3/4	35.5
3 1/2	USFC5000A-308	323103	260.4	219.1	79.4	21.0	88.9	140.9	138.9	182.6	46.8	187.3	15.9		16.15
3 11/16	USFC5000A-311														
3 15/16	USFC5000A-315	96050	10 7/8	9 3/8	3 1/2	31/32	3 21/32	5 15/16	5 13/16	7 3/4	2 1/16	8 1/8	9/16	3/4	43.1
4	USFC5000A-400	427230	276.2	238.1	88.9	24.6	92.9	150.8	147.6	196.9	52.4	206.4	14.3		19.59

*For expansion bearings, the sum of dimension “H” and “N” can increase by the corresponding value in table VIII on page I-69.
One expansion unit is to be used in conjunction with one non-expansion unit for applications using an adapter lock unit
Failure to utilize one expansion and one non-expansion unit is likely to result in reduced bearing performance.

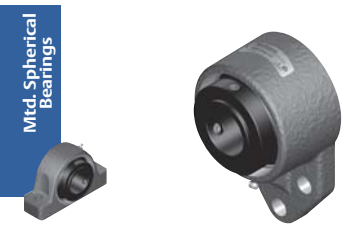

Rolling Elements: Spherical Roller
Housing: Ductile Iron Flange Bracket
Self Alignment: +/- 2 Degrees
Lock: Setscrew
Seal: Felt
Optional Seal: Double Lip Contact
Temperature: -20° to 220° F

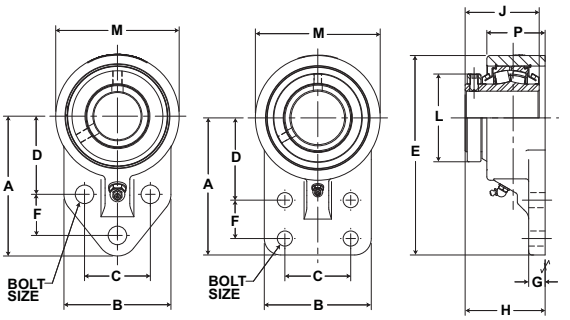

USBF5000 Series Three-Bolt Flange Brackets - Collar Mount

Bore Diameter inch	Part No.	Basic Dynamic Rating lb/N	Dimensions inch / mm													Unit Wt. lb/kg
			A	B	C	D	E	F	G	H *	J	L	M	P	Bolt Size	
1 7/16	USBF5000-107	20368 90597	4 1/4 108.0	3 1/4 82.6	2 50.8	2 3/8 60.3	6 1/8 155.6	1 1/4 31.8	5/8 15.9	2 53/64 71.8	2 3/4 69.9	2 49/64 70.2	3 3/4 95.3	2 1/4 57.2	1/2	6.4 2.91
1 15/16	USBF5000-115	23520 104617	5 3/16 131.8	4 101.6	2 3/4 69.9	2 15/16 74.6	7 5/16 185.7	1 5/8 41.3	11/16 17.5	2 31/32 75.4	2 7/8 73.0	3 76.2	4 1/4 108.0	2 3/8 60.3	1/2	7.5 3.41

USBF5000 Series Four-Bolt Flange Brackets - Collar Mount

Bore Diameter inch	Part No.	Basic Dynamic Rating lb/N	Dimensions inch / mm													Unit Wt. lb/kg
			A	B	C	D	E	F	G	H *	J	L	M	P	Bolt Size	
2 7/16	USBFF5000-207	44691 198786	6 1/4 158.8	4 7/8 123.8	3 76.2	3 3/4 95.3	9 3/32 231.0	1 3/4 44.5	3/4 19.1	3 31/64 88.5	3 3/8 85.7	4 101.6	5 11/16 144.5	2 21/32 67.5	5/8	16.6 7.55

*For expansion bearings, this dimension can increase by the corresponding value in table VIII on page I-69.

Metric dimensions for reference only.
Not all parts are available from stock. Please contact customer service for availability (800) 626-2120.
For more information on bearing capabilities outside of our standard offering, please contact Application Engineering (800) 626-2093.

Rolling Elements: Spherical Roller
Housing: Ductile Iron Flange Bracket
Self Alignment: +/- 2 Degrees
Lock: Adapter
Seal: Felt
Optional Seal: Double Lip Contact
Temperature: -20° to 220° F

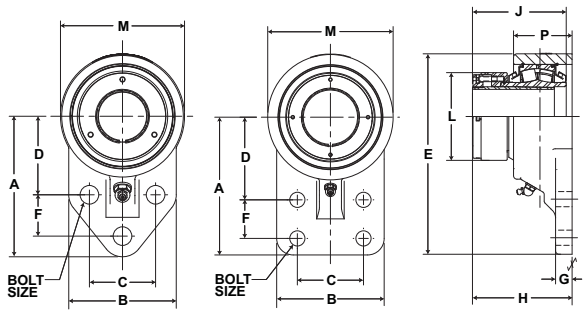

USBF5000A Series Three-Bolt Flange Brackets - Adapter Mount

Bore Diameter inch	Part No.	Basic Dynamic Rating lb/N	Dimensions inch / mm													Unit Wt. lb/kg
			A	B	C	D	E	F	G	H *	J	L	M	P	Bolt Size	
1 7/16	USBF5000A-107	20368 90597	4 1/4 108.0	3 1/4 82.6	2 50.8	2 3/8 60.3	6 1/8 155.6	1 1/4 31.8	5/8 15.9	3 7/16 87.3	3 11/32 84.9	2 47/64 69.5	3 3/4 95.3	2 1/4 57.2	1/2	6.1 2.76
1 15/16	USBF5000A-115	23520 105370	5 3/16 131.8	4 101.6	2 3/4 69.9	2 15/16 74.6	7 5/16 185.7	1 5/8 41.3	11/16 17.5	3 37/64 90.9	3 1/2 88.9	3 11/64 80.6	4 1/4 108.0	2 3/8 60.3	1/2	8.0 3.63

USBF5000A Series Four-Bolt Flange Brackets - Adapter Mount

Bore Diameter inch	Part No.	Basic Dynamic Rating lb/N	Dimensions inch / mm													Unit Wt. lb/kg
			A	B	C	D	E	F	G	H *	J	L	M	P	Bolt Size	
2 7/16	USBFF5000A-207	44691 198786	6 1/4 158.8	4 7/8 123.8	3 76.2	3 3/4 95.3	9 3/32 231.0	1 3/4 44.5	3/4 19.1	4 13/32 111.9	4 5/16 109.5	3 63/64 101.2	5 11/16 144.5	2 21/32 67.5	5/8	17.6 7.99

*For expansion bearings, this dimension can increase by the corresponding value in table VIII on page I-69.
One expansion unit is to be used in conjunction with one non-expansion unit for applications using an adapter lock unit
Failure to utilize one expansion and one non-expansion unit is likely to result in reduced bearing performance.

Rolling Elements: Spherical Roller

Housing: Ductile Iron Two Bolt Pillow Block

Self Alignment: +/- 2 Degrees

Lock: Setscrew

Seal: Felt

Optional Seal: Double Lip Contact

Temperature: -20° to 220° F

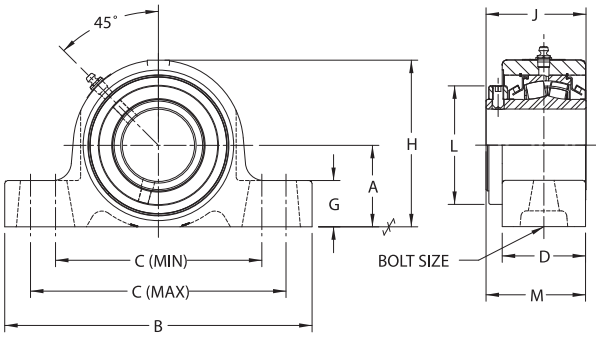

USRBE5000 Series Two-Bolt Base Pillow Blocks - Collar Mount, Type E Mounting Dimensions

Bore Diameter inch	Part No.	Basic Dynamic Rating lb/N	Dimensions inch / mm											Unit Wt. lb/kg
			A	B	C		D	G	H	J	L	M *	Bolt Size	
					Min.	Max.								
1 15/16 2	USRBE5000-115 USRBE5000-200	23520 104617	2 1/4 57.2	8 7/8 225.4	6 152.4	7 1/8 181.0	2 7/16 61.9	1 5/16 33.3	4 17/32 115.1	2 7/8 73.0	3 76.2	2 63/64 75.8	5/8	11.4 5.18
2 3/16	USRBE5000-203	28087 124931	2 1/2 63.5	9 5/8 244.5	6 1/2 165.1	7 7/8 200.0	2 1/2 63.5	1 7/16 36.5	4 31/32 126.2	3 1/8 79.4	3 1/4 82.6	3 1/8 79.4	5/8	13.7 6.21
2 7/16 2 1/2	USRBE5000-207 USRBE5000-208	44691 198786	2 3/4 69.9	10 3/8 263.5	6 7/8 174.6	8 5/8 219.1	2 13/16 71.4	1 9/16 39.7	5 5/8 142.9	3 3/8 85.7	4 101.6	3 11/32 84.5	5/8	19.4 8.82
2 11/16 2 3/4 2 15/16 3	USRBE5000-211 USRBE5000-212 USRBE5000-215 USRBE5000-300	47447 211044	3 1/8 79.4	11 5/8 295.3	7 7/8 200.0	9 5/8 244.5	2 5/8 66.7	1 5/8 41.3	6 1/16 154.0	3 7/8 98.4	4 17/32 115.1	3 11/16 93.7	3/4	22.3 10.14
3 3/16 3 7/16 3 1/2	USRBE5000-303 USRBE5000-307 USRBE5000-308	72640 323103	3 3/4 95.3	13 1/2 342.9	9 3/8 238.1	11 1/4 285.8	3 1/8 79.4	2 1/16 52.4	7 3/8 187.3	4 15/32 113.5	5 5/16 134.9	4 7/32 107.2	7/8	38.8 17.62
3 11/16 3 15/16 4	USRBE5000-311 USRBE5000-315 USRBE5000-400	96050 427230	4 1/8 104.8	14 1/4 362.0	10 254.0	11 3/4 298.5	3 9/16 90.5	2 1/4 57.2	8 1/2 215.9	4 15/16 125.4	6 152.4	4 23/32 119.9	1	55.4 25.19

*For expansion bearings, this dimension can increase by the corresponding value in table VIII on page I-69.

Metric dimensions for reference only.
Not all parts are available from stock. Please contact customer service for availability (800) 626-2120.
For more information on bearing capabilities outside of our standard offering, please contact Application Engineering (800) 626-2093.

Rolling Elements: Spherical Roller
Housing: Ductile Iron Two Bolt Pillow Block
Self Alignment: +/- 2 Degrees
Lock: Adapter
Seal: Felt
Optional Seal: Double Lip Contact
Temperature: -20° to 220° F

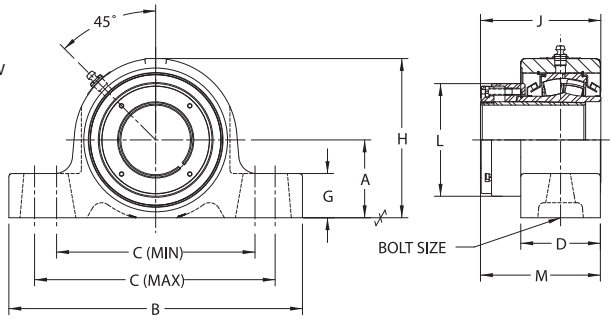

USRBE5000A Series Two-Bolt Base Pillow Blocks - Adapter Mount, Type E Mounting Dimensions

Bore Diameter inch	Part No.	Basic Dynamic Rating lb/N	Dimensions inch / mm											Unit Wt. lb/kg
			A	B	C Min.	C Max.	D	G	H	J	L	M *	Bolt Size	
1 15/16	USRBE5000A-115	23520	2 1/4	8 7/8	6	7 1/8	2 7/16	1 5/16	4 17/32	3 1/2	3 11/64	3 19/32	5/8	11.9
2	USRBE5000A-200	104617	57.2	225.4	152.4	181.0	61.9	33.3	115.1	88.9	80.6	91.3		5.41
2 3/16	USRBE5000A-203	28087	2 1/2	9 5/8	6 1/2	7 7/8	2 1/2	1 7/16	4 31/32	3 7/8	3 7/16	3 7/8	5/8	14.3
		124931	63.5	244.5	165.1	200.0	63.5	36.5	126.2	98.4	87.3	98.4		6.50
2 7/16	USRBE5000A-207	44691	2 3/4	10 3/8	6 7/8	8 5/8	2 13/16	1 9/16	5 5/8	4 5/16	3 63/64	4 19/64	5/8	20.3
2 1/2	USRBE5000A-208	198786	69.9	263.5	174.6	219.1	71.4	39.7	142.9	109.5	101.2	109.1		9.23
2 11/16	USRBE5000A-211													
2 3/4	USRBE5000A-212	47447	3 1/8	11 5/8	7 7/8	9 5/8	2 5/8	1 5/8	6 1/16	4 31/64	4 25/64	4 9/32	3/4	22.4
2 15/16	USRBE5000A-215	211044	79.4	295.3	200.0	244.5	66.7	41.3	154.0	113.9	111.5	108.7		10.18
3	USRBE5000A-300													
3 3/16	USRBE5000A-303	72640	3 3/4	13 1/2	9 3/8	11 1/4	3 1/8	2 1/16	7 3/8	5 35/64	5 15/32	5 19/64	7/8	40.7
3 7/16	USRBE5000A-307	323103	95.3	342.9	238.1	285.8	79.4	52.4	187.3	140.9	138.9	134.5		18.50
3 1/2	USRBE5000A-308													
3 11/16	USRBE5000A-311	96050	4 1/8	14 1/4	10	11 3/4	3 9/16	2 1/4	8 1/2	5 15/16	5 13/16	5 23/32	1	56.2
3 15/16	USRBE5000A-315	427230	104.8	362.0	254.0	298.5	90.5	57.2	215.9	150.8	147.6	145.3		25.55
4	USRBE5000A-400													

*For expansion bearings, this dimension can increase by the corresponding value in table VIII on page I-69.
One expansion unit is to be used in conjunction with one non-expansion unit for applications using an adapter lock unit
Failure to utilize one expansion and one non-expansion unit is likely to result in reduced bearing performance.

Rolling Elements: Spherical Roller
Housing: Ductile Iron Four Bolt Flange
Self Alignment: +/- 2 Degrees
Lock: Setscrew
Seal: Felt
Optional Seal: Double Lip Contact
Temperature: -20° to 220° F

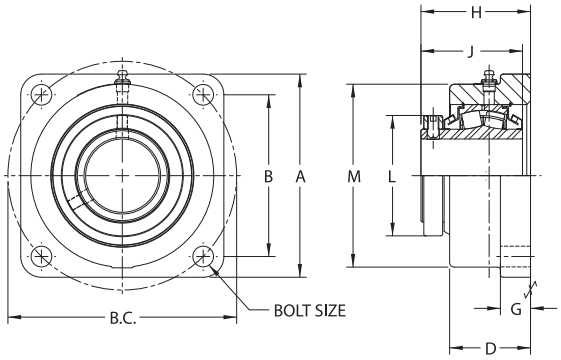

USFBE5000 Series Four-Bolt Flange Units - Collar Mount, Type E Mounting Dimensions

Bore Diameter inch	Part No.	Basic Dynamic Rating lb/N	Dimensions inch / mm										Unit Wt. lb/kg
			A	B	B.C.	D	G	H *	J	L	M	Bolt Size	
1 15/16 2	USFBE5000-115 USFBE5000-200	23520 104617	5 1/2 139.7	4 3/8 111.1	6 3/16 157.2	2 9/16 65.1	7/8 22.2	3 3/16 81.0	2 7/8 73.0	3 76.2	4 31/32 126.2	1/2	11.6 5.25
2 3/16	USFBE5000-203	28087 124931	6 3/16 157.2	4 7/8 123.8	6 57/64 175.0	2 5/8 66.7	1 25.4	3 5/16 84.1	3 1/8 79.4	3 1/4 82.6	5 15/32 138.9	5/8	14.8 6.75
2 7/16 2 1/2	USFBE5000-207 USFBE5000-208	44691 198786	6 3/4 171.5	5 3/8 136.5	7 19/32 192.9	2 11/16 68.3	1 25.4	3 31/64 88.5	3 3/8 85.7	4 101.6	6 3/32 154.8	5/8	19.1 8.68
2 11/16 2 3/4 2 15/16 3	USFBE5000-211 USFBE5000-212 USFBE5000-215 USFBE5000-300	47447 211044	7 5/8 193.7	6 152.4	8 31/64 215.5	2 3/4 69.9	1 1/16 27.0	3 63/64 101.2	3 7/8 98.4	4 17/32 115.1	6 53/64 173.4	3/4	26.4 12.00
3 3/16 3 7/16 3 1/2	USFBE5000-303 USFBE5000-307 USFBE5000-308	72640 323103	8 5/8 219.1	7 177.8	9 29/32 251.6	3 1/4 82.6	1 1/4 31.8	4 19/32 116.7	4 15/32 113.5	5 5/16 134.9	7 31/32 202.4	3/4	40.3 18.34
3 11/16 3 15/16 4	USFBE5000-311 USFBE5000-315 USFBE5000-400	96050 427230	9 1/2 241.3	7 19/32 192.9	10 3/4 273.1	3 11/16 93.7	1 1/4 31.8	5 5/64 129.0	4 15/16 125.4	6 152.4	8 7/8 225.4	7/8	52.3 23.76

*For expansion bearings, this dimension can increase by the corresponding value in table VIII on page I-69.

Metric dimensions for reference only.
Not all parts are available from stock. Please contact customer service for availability (800) 626-2120.
For more information on bearing capabilities outside of our standard offering, please contact Application Engineering (800) 626-2093.

Rolling Elements: Spherical Roller
Housing: Ductile Iron Four Bolt Flange
Self Alignment: +/- 2 Degrees
Lock: Adapter
Seal: Felt
Optional Seal: Double Lip Contact
Temperature: -20° to 220° F

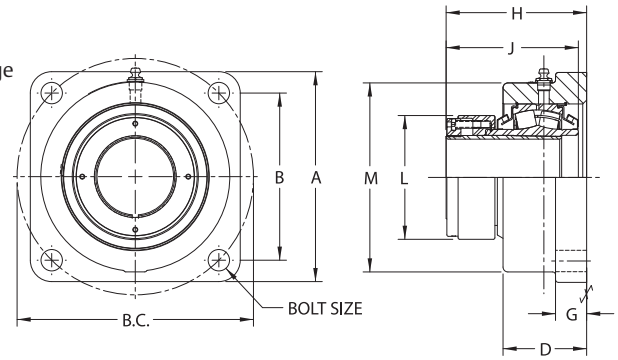

USFBE5000A Series Four-Bolt Flange Units - Adapter Mount, Type E Mounting Dimensions

Bore Diameter inch	Part No.	Basic Dynamic Rating lb/N	Dimensions inch / mm										Unit Wt. lb/kg
			A	B	B.C.	D	G	H *	J	L	M	Bolt Size	
1 15/16 2	USFBE5000A-115 USFBE5000A-200	23520 104617	5 1/2 139.7	4 3/8 111.1	6 3/16 157.2	2 9/16 65.1	7/8 22.2	3 51/64 96.4	3 1/2 88.9	3 11/64 80.6	4 31/32 126.2	1/2	12.0 5.48
2 3/16	USFBE5000A-203	28087 124931	6 3/16 157.2	4 7/8 123.8	6 57/64 175.0	2 5/8 66.7	1 25.4	4 1/16 103.2	3 7/8 98.4	3 7/16 87.3	5 15/32 138.9	5/8	15.5 7.04
2 7/16 2 1/2	USFBE5000A-207 USFBE5000A-208	44691 198786	6 3/4 171.5	5 3/8 136.5	7 19/32 192.9	2 11/16 68.3	1 25.4	4 13/32 111.9	4 5/16 109.5	3 63/64 101.2	6 3/32 154.8	5/8	20.0 9.10
2 11/16 2 3/4 2 15/16 3	USFBE5000A-211 USFBE5000A-212 USFBE5000A-215 USFBE5000A-300	47447 211044	7 5/8 193.7	6 152.4	8 31/64 215.5	2 3/4 69.9	1 1/16 27.0	4 19/32 116.7	4 31/64 113.9	4 25/64 111.5	6 53/64 173.4	3/4	26.5 12.04
3 3/16 3 7/16 3 1/2	USFBE5000A-303 USFBE5000A-307 USFBE5000A-308	72640 323103	8 5/8 219.1	7 177.8	9 29/32 251.6	3 1/4 82.6	1 1/4 31.8	5 43/64 144.1	5 35/64 140.9	5 15/32 138.9	7 31/32 202.4	3/4	42.3 19.23
3 11/16 3 15/16 4	USFBE5000A-311 USFBE5000A-315 USFBE5000A-400	96050 427230	9 1/2 241.3	7 19/32 192.9	10 3/4 273.1	3 11/16 93.7	1 1/4 31.8	6 5/64 154.4	5 15/16 150.8	5 13/16 147.6	8 7/8 225.4	7/8	53.0 24.10

*For expansion bearings, this dimension can increase by the corresponding value in table VIII on page I-69.
One expansion unit is to be used in conjunction with one non-expansion unit for applications using an adapter lock unit
Failure to utilize one expansion and one non-expansion unit is likely to result in reduced bearing performance.

Rolling Elements: Spherical Roller

Housing: Ductile Iron Piloted Flange Cartridge

Self Alignment: +/- 2 Degrees

Lock: Setscrew

Seal: Felt

Optional Seal: Double Lip Contact

Temperature: -20° to 220° F

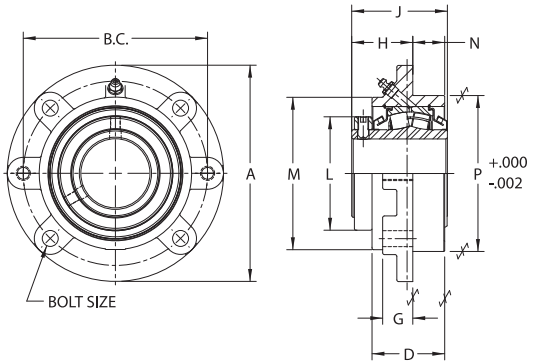

USFCE5000 Series Flange Cartridge Units - Collar Mount, Type E Mounting Dimensions

Bore Diameter inch	Part No.	Basic Dynamic Rating lb/N	Dimensions inch / mm											Unit Wt. lb/kg
			A	B.C.	D	G	H *	J	L	M	N *	P	Bolt Size	
1 15/16	USFCE5000-115	23520	6 3/8	5 3/8	2 7/16	1	1 31/32	2 7/8	3	4 1/2	1 1/16	4 1/2	3/8	9.6
2	USFCE5000-200	104617	161.9	136.5	61.9	25.4	50.0	73.0	76.2	114.3	27.0	114.3		4.35
2 3/16	USFCE5000-203	28087	7 1/8	6	2 1/2	1	2 1/16	3 1/8	3 1/4	4 7/8	1 1/8	5	1/2	11.8
		124931	181.0	152.4	63.5	25.4	52.4	79.4	82.6	123.8	28.6	127.0		5.35
2 7/16	USFCE5000-207	44691	7 5/8	6 1/2	2 9/16	1 1/16	2 5/32	3 3/8	4	5 3/8	1 1/8	5 1/2	1/2	15.0
2 1/2	USFCE5000-208	198786	193.7	165.1	65.1	27.0	54.8	85.7	101.6	136.5	28.6	139.7		6.83
2 11/16	USFCE5000-211													
2 3/4	USFCE5000-212	47447	8 3/4	7 1/2	2 9/16	15/16	2 7/16	3 7/8	4 17/32	6 1/4	1 1/4	6 3/8	5/8	22.0
2 15/16	USFCE5000-215	211044	222.3	190.5	65.1	23.8	61.9	98.4	115.1	158.8	31.8	161.9		10.02
3	USFCE5000-300													
3 3/16	USFCE5000-303	72640	10 1/4	8 5/8	3 1/8	1 7/16	2 15/16	4 15/32	5 5/16	7 1/8	1 5/16	7 3/8	3/4	36.5
3 7/16	USFCE5000-307	323103	260.4	219.1	79.4	36.5	74.6	113.5	134.9	181.0	33.3	187.3		16.59
3 1/2	USFCE5000-308													
3 11/16	USFCE5000-311	96050	10 7/8	9 3/8	3 1/2	1 1/16	2 21/32	4 15/16	6	7 3/4	2 1/16	8 1/8	3/4	42.7
3 15/16	USFCE5000-315	427230	276.2	238.1	88.9	27.0	67.5	125.4	152.4	196.9	52.4	206.4		19.40
4	USFCE5000-400													

*For expansion bearings, the sum of dimension “H” and “N” can increase by the corresponding value in table VIII on page I-69.

Metric dimensions for reference only.
Not all parts are available from stock. Please contact customer service for availability (800) 626-2120.
For more information on bearing capabilities outside of our standard offering, please contact Application Engineering (800) 626-2093.

Rolling Elements: Spherical Roller

Housing: Ductile Iron Piloted Flange Cartridge

Self Alignment: +/- 2 Degrees

Lock: Adapter

Seal: Felt

Optional Seal: Double Lip Contact

Temperature: -20° to 220° F

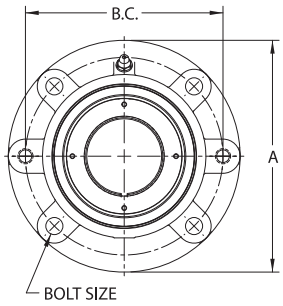

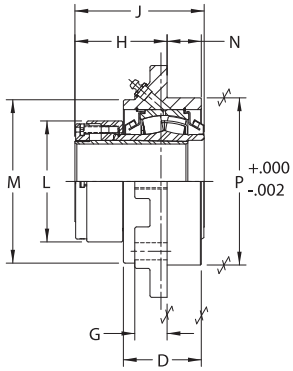

USFCE5000A Series Flange Cartridge Units - Adapter Mount, Type E Mounting Dimensions

Bore Diameter inch	Part No.	Basic Dynamic Rating lb/N	Dimensions inch / mm											Unit Wt. lb/kg
			A	B.C.	D	G	H *	J	L	M	N *	P	Bolt Size	
1 15/16	USFCE5000A-115	23520	6 3/8	5 3/8	2 7/16	1	2 19/32	3 1/2	3 11/64	4 1/2	1 1/16	4 1/2	3/8	10.1
2	USFCE5000A-200	104617	161.9	136.5	61.9	25.4	65.9	88.9	80.6	114.3	27.0	114.3		4.57
2 3/16	USFCE5000A-203	28087 124931	7 1/8 181.0	6 152.4	2 1/2 63.5	1 25.4	2 7/8 73.0	3 7/8 98.4	3 7/16 87.3	4 7/8 123.8	1 1/8 28.6	5 127.0	1/2	12.4 5.65
2 7/16	USFCE5000A-207	44691	7 5/8	6 1/2	2 9/16	1 1/16	3 5/64	4 5/16	3 63/64	5 3/8	1 1/8	5 1/2	1/2	15.9
2 1/2	USFCE5000A-208	198786	193.7	165.1	65.1	27.0	78.2	109.5	101.2	136.5	28.6	139.7		7.24
2 11/16 2 3/4 2 15/16 3	USFCE5000A-211 USFCE5000A-212 USFCE5000A-215 USFCE5000A-300	47447 211044	8 3/4 222.3	7 1/2 190.5	2 9/16 65.1	15/16 23.8	3 3/64 77.4	4 31/64 113.9	4 25/64 111.5	6 1/4 158.8	1 1/4 31.8	6 3/8 161.9	5/8	22.1 10.06
3 3/16 3 7/16 3 1/2	USFCE5000A-303 USFCE5000A-307 USFCE5000A-308	72640 323103	10 1/4 260.4	8 5/8 219.1	3 1/8 79.4	1 7/16 36.5	4 1/32 102.4	5 35/64 140.9	5 15/32 138.9	7 1/8 181.0	1 5/16 33.3	7 3/8 187.3	3/4	38.5 17.49
3 11/16 3 15/16 4	USFCE5000A-311 USFCE5000A-315 USFCE5000A-400	96050 427230	10 7/8 276.2	9 3/8 238.1	3 1/2 88.9	1 1/16 27.0	3 21/32 92.9	5 15/16 150.8	5 13/16 147.6	7 3/4 196.9	2 1/16 52.4	8 1/8 206.4	3/4	43.4 19.75

*For expansion bearings, the sum of dimension “H” and “N” can increase by the corresponding value in table VIII on page I-69.
One expansion unit is to be used in conjunction with one non-expansion unit for applications using an adapter lock unit
Failure to utilize one expansion and one non-expansion unit is likely to result in reduced bearing performance.

Rolling Elements: Spherical Roller
Housing: Cast Iron Take-Up
Self Alignment: +/- 2 Degrees
Lock: Setscrew
Seal: Felt
Optional Seal: Double Lip Contact
Temperature: -20° to 220° F

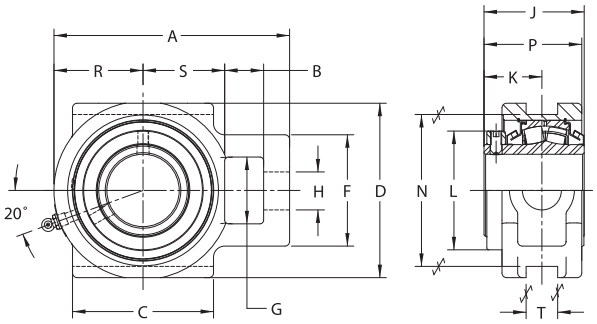

USTU5000 Series Take-Up Units - Collar Mount

Bore Diameter inch	Part No.	Basic Dynamic Rating lb/N	Dimensions inch / mm															Unit Wt. lb/kg
			A	B	C	D	F	G	H	J	K	L	N	P	R	S	T	
1 15/16	USTU5000-115	23520	6 3/16	1 1/16	3 1/2	4 3/4	2 7/8	1 15/16	1 1/16	2 7/8	1 3/4	3	4	2 61/64	2 1/4	2 1/8	11/16	8.3
2	USTU5000-200	104617	157.2	27.0	88.9	120.7	73.0	49.2	27.0	73.0	44.5	76.2	101.6	75.0	57.2	54.0	17.5	3.76
2 3/16	USTU5000-203	28087	6 13/16	1 3/16	3 3/4	5 1/4	3 1/2	2 1/4	1 3/16	3 1/8	1 15/16	3 1/4	4 1/2	3 15/64	2 1/2	2 3/8	13/16	10.7
		124931	173.0	30.2	95.3	133.4	88.9	57.2	30.2	79.4	49.2	82.6	114.3	82.2	63.5	60.3	20.6	4.86
2 7/16	USTU5000-207	44691	7 15/16	1 5/16	4 3/4	5 7/8	3 3/4	2 1/4	1 5/16	3 3/8	1 15/16	4	5 1/8	3 19/64	3	2 3/4	1 1/16	16.8
2 1/2	USTU5000-208	198786	201.6	33.3	120.7	149.2	95.3	57.2	33.3	85.7	49.2	101.6	130.2	83.7	76.2	69.9	27.0	7.63
2 11/16	USTU5000-211																	
2 3/4	USTU5000-212	47447	8 3/4	1 9/16	4 3/4	6 3/4	4 1/4	2 3/4	1 9/16	3 7/8	2 3/8	4 17/32	5 15/16	3 55/64	3 3/16	3	1 13/16	24.6
2 15/16	USTU5000-215	211044	222.3	39.7	120.7	171.5	108.0	69.9	39.7	98.4	60.3	115.1	150.8	98.0	81.0	76.2	46.0	11.16
3	USTU5000-300																	
3 3/16	USTU5000-303																	
3 7/16	USTU5000-307	72640	10 7/16	1 13/16	6 1/4	7 5/8	4 7/8	2 7/8	1 13/16	4 15/32	2 21/32	5 5/16	6 13/16	4 29/64	4	3 5/8	1 13/16	40.9
3 1/2	USTU5000-308	323103	265.1	46.0	158.8	193.7	123.8	73.0	46.0	113.5	67.5	134.9	173.0	113.1	101.6	92.1	46.0	18.60
3 11/16	USTU5000-311																	
3 15/16	USTU5000-315	96050	11 13/16	2 1/8	7	9 7/16	5 5/8	3 3/8	2 3/16	4 15/16	2 15/16	6	8 5/8	5 3/16	4 7/16	4 1/8	2 1/16	66.6
4	USTU5000-400	427230	300.0	54.0	177.8	239.7	142.9	85.7	55.6	125.4	74.6	152.4	219.1	131.8	112.7	104.8	52.4	30.26

Note: These take-up units can be used with T-1000 take-up frames shown on pages I-45 and I-46.

Metric dimensions for reference only.
Not all parts are available from stock. Please contact customer service for availability (800) 626-2120.
For more information on bearing capabilities outside of our standard offering, please contact Application Engineering (800) 626-2093.

Rolling Elements: Spherical Roller
Housing: Cast Iron Take-Up
Self Alignment: +/- 2 Degrees
Lock: Adapter
Seal: Felt
Optional Seal: Double Lip Contact
Temperature: -20° to 220° F

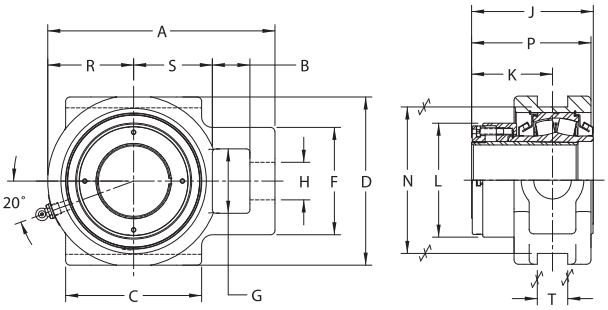

USTU5000A Series Take-Up Units - Adapter Mount

Bore Diameter inch	Part No.	Basic Dynamic Rating lb/N	Dimensions inch / mm A	B	C	D	F	G	H	J	K	L	N	P	R	S	T	Unit Wt. lb/kg
1 15/16	USTU5000A-115	23520	6 3/16	1 1/16	3 1/2	4 3/4	2 7/8	1 15/16	1 1/16	3 1/2	2 11/32	3 3/16	4	3 9/16	2 1/4	2 1/8	11/16	8.8
2	USTU5000A-200	104617	157.2	27.0	88.9	120.7	73.0	49.2	27.0	88.9	59.5	81.0	101.6	90.5	57.2	54.0	17.5	3.99
2 3/16	USTU5000A-203	28087	6 13/16	1 3/16	3 3/4	5 1/4	3 1/2	2 1/4	1 3/16	3 7/8	2 45/64	3 7/16	4 1/2	3 63/64	2 1/2	2 3/8	13/16	11.3
		124931	173.0	30.2	95.3	133.4	88.9	57.2	30.2	98.4	68.7	87.3	114.3	101.2	63.5	60.3	20.6	5.14
2 7/16	USTU5000A-207	44691	7 15/16	1 5/16	4 3/4	5 7/8	3 3/4	2 1/4	1 5/16	4 5/16	2 7/8	3 63/64	5 1/8	4 15/64	3	2 3/4	1 1/16	17.7
2 1/2	USTU5000A-208	198786	201.6	33.3	120.7	149.2	95.3	57.2	33.3	109.5	73.0	101.2	130.2	107.6	76.2	69.9	27.0	8.04
2 11/16	USTU5000A-211																	
2 3/4	USTU5000A-212	47447	8 3/4	1 9/16	4 3/4	6 3/4	4 1/4	2 3/4	1 9/16	4 31/64	2 31/32	4 25/64	5 15/16	4 15/32	3 3/16	3	1 13/16	24.6
2 15/16	USTU5000A-215	211044	222.3	39.7	120.7	171.5	108.0	69.9	39.7	113.9	75.4	111.5	150.8	113.5	81.0	76.2	46.0	11.20
3	USTU5000A-300																	
3 3/16	USTU5000A-303																	
3 7/16	USTU5000A-307	72640	10 7/16	1 13/16	6 1/4	7 5/8	4 7/8	2 7/8	1 13/16	5 35/64	3 47/64	5 15/32	6 13/16	5 35/64	4	3 5/8	1 13/16	42.9
3 1/2	USTU5000A-308	323103	265.1	46.0	158.8	193.7	123.8	73.0	46.0	140.9	94.9	138.9	173.0	140.9	101.6	92.1	46.0	19.50
3 11/16	USTU5000A-311																	
3 15/16	USTU5000A-315	96050	11 13/16	2 1/8	7	9 7/16	5 5/8	3 3/8	2 3/16	5 15/16	3 15/16	5 13/16	8 5/8	6 3/16	4 7/16	4 1/8	2 1/16	67.3
4	USTU5000A-400	427230	300.0	54.0	177.8	239.7	142.9	85.7	55.6	150.8	100.0	147.6	219.1	157.2	112.7	104.8	52.4	30.61

Note: These take-up units can be used with T-1000 take-up frames shown on pages I-45 and I-46.
One expansion unit is to be used in conjunction with one non-expansion unit for applications using an adapter lock unit
Failure to utilize one expansion and one non-expansion unit is likely to result in reduced bearing performance.

Rolling Elements: Spherical Roller
Housing: Cast Iron Top Angle Take-Up
Self Alignment: +/- 2 Degrees
Lock: Setscrew
Seal: Felt
Optional Seal: Double Lip Contact
Temperature: -20° to 220° F

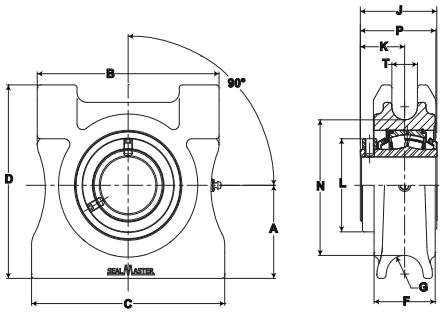

USTA5000 Series Top Angle Take-Up Units - Collar Mount

Bore Diameter inch	Part No.	Basic Dynamic Rating lb/N	Dimensions inch / mm A	B	C	D	F	G	J	K	L	N	P	T	Unit Wt. lb/kg
1 15/16	USTA5000-115	23520 104617	3 1/4 82.6	6 152.4	6 1/2 165.1	6 3/8 162.1	2 7/16 62.0	51/64 20.3	2 7/8 73.0	1 11/16 42.9	3 76.2	3 33/64 89.3	2 7/8 73.2	7/8 22.4	12.1 5.49
2 3/16	USTA5000-203	28087 124931	3 1/2 88.9	7 177.8	7 1/2 190.5	7 7/16 189.0	2 7/16 62.0	51/64 20.3	3 1/8 79.7	1 7/8 47.5	3 1/4 82.6	4 57/64 124.2	3 1/4 82.3	1 1/8 28.4	18.0 8.16
2 7/16	USTA5000-207	44691 198786	4 101.6	8 203.2	8 1/2 215.9	8 5/16 211.1	2 11/16 68.3	51/64 20.3	3 3/8 85.7	1 61/64 49.6	4 101.6	5 53/64 148.0	3 21/64 84.5	1 1/8 28.4	27.9 12.66
2 15/16	USTA5000-215	47447 211044	4 101.6	8 203.2	8 1/2 215.9	8 5/16 211.1	2 13/16 71.4	51/64 20.3	3 7/8 98.3	2 11/32 59.5	4 17/32 115.1	5 53/64 148.0	3 47/64 94.9	1 1/8 28.4	27.4 12.43
3 7/16	USTA5000-307	72640 323103	4 1/2 114.3	9 228.6	9 1/2 241.3	9 5/8 244.6	3 3/16 81.0	51/64 20.3	4 15/32 113.5	2 21/32 67.5	5 5/16 134.5	6 53/64 173.4	4 1/4 108.0	1 3/8 35.1	39.3 17.83
3 15/16	USTA5000-315	96050 427230	5 1/2 139.7	10 1/2 266.7	11 279.4	11 279.4	3 9/16 90.4	51/64 20.3	4 15/16 125.4	2 15/16 74.4	6 152.4	7 19/32 192.9	4 1/2 114.0	1 23/64 34.5	54.5 24.72
Type E Mounting Dimensions															
2 3/16	USTAE5000-203	28087 124931	3 1/16 77.7	6 3/4 171.5	7 177.8	6 7/8 174.8	2 1/2 63.5	51/64 20.3	3 1/8 79.7	1 55/64 47.2	3 1/4 82.6	4 37/64 116.3	3 3/64 77.4	7/8 22.4	11.3 5.13
2 7/16	USTAE5000-207	44691 198786	3 1/2 88.9	7 177.8	7 1/2 190.5	7 7/16 189.0	2 3/4 69.9	49/64 19.3	3 3/8 85.7	1 61/64 49.6	4 101.6	4 15/16 125.2	3 21/64 84.5	1 1/8 28.4	19.6 8.89

Rolling Elements: Spherical Roller
Housing: Cast Iron Top Angle Take-Up
Self Alignment: +/- 2 Degrees
Lock: Adapter
Seal: Felt
Optional Seal: Double Lip Contact
Temperature: -20° to 220° F

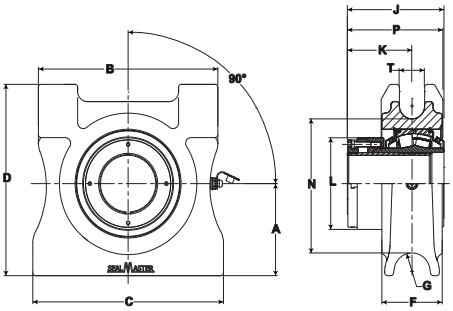

USTA5000A Series Top Angle Take-Up Units - Adapter Mount

Bore Diameter inch	Part No.	Basic Dynamic Rating lb/N	Dimensions inch / mm A	B	C	D	F	G	J	K	L	N	P	T	Unit Wt. lb/kg
1 15/16	USTA5000A-115	23520 104617	3 1/4 82.6	6 152.4	6 1/2 165.1	6 3/8 162.1	2 7/16 62.0	51/64 20.3	3 1/2 88.9	2 5/16 58.7	3 3/16 80.6	3 33/64 89.3	3 1/2 88.9	7/8 22.4	12.6 5.72
2 3/16	USTA5000A-203	28087 124931	3 1/2 88.9	7 177.8	7 1/2 190.5	7 7/16 189.0	2 7/16 62.0	51/64 20.3	3 7/8 98.4	2 5/8 66.5	3 7/16 87.4	4 57/64 124.2	4 101.6	1 1/8 28.4	18.7 8.48
2 7/16	USTA5000A-207	44691 198786	4 101.6	8 203.2	8 1/2 215.9	8 5/16 211.1	2 11/16 68.3	51/64 20.3	4 5/16 109.5	2 7/8 73.2	3 63/64 101.2	5 53/64 148.0	4 17/64 108.3	1 1/8 28.4	28.9 13.11
2 15/16	USTA5000A-215	47447 211044	4 101.6	8 203.2	8 1/2 215.9	8 5/16 211.1	2 13/16 71.4	51/64 20.3	4 31/64 113.9	2 31/32 75.4	4 25/64 111.5	5 53/64 148.0	4 11/32 110.3	1 1/8 28.4	27.6 12.52
3 7/16	USTA5000A-307	72640 323103	4 1/2 114.3	9 228.6	9 1/2 241.3	9 5/8 244.6	3 3/16 81.0	51/64 20.3	5 35/64 140.9	3 47/64 94.9	5 15/32 138.9	6 53/64 173.4	5 21/64 135.3	1 3/8 35.1	41.3 18.73
3 15/16	USTA5000A-315	96050 427230	5 1/2 139.7	10 1/2 266.7	11 279.4	11 279.4	3 9/16 90.4	51/64 20.3	5 15/16 150.8	3 15/16 99.8	5 37/64 141.7	7 19/32 192.9	5 1/2 139.7	1 23/64 34.5	55.4 25.13
Type E Mounting Dimensions															
2 3/16	USTAE5000A-203	28087 124931	3 3/8 85.7	6 3/4 171.5	7 177.8	6 7/8 174.8	2 1/2 63.5	51/64 20.3	3 7/8 98.4	2 5/8 66.5	3 7/16 87.4	4 37/64 116.3	3 13/16 96.8	7/8 22.4	15.7 7.12
2 7/16	USTAE5000A-207	44691 198786	3 1/2 88.9	7 177.8	7 1/2 190.5	7 7/16 189.0	2 3/4 69.9	49/64 19.3	4 5/16 109.5	2 7/8 73.2	3 63/64 101.2	4 15/16 125.2	4 17/64 108.3	1 1/8 28.4	20.6 9.34

Note: One expansion unit is to be used in conjunction with one non-expansion unit for applications using an adapter lock unit.Failure to utilize one expansion and one non-expansion unit is likely to result in reduced bearing performance.
Metric dimensions for reference only.
Not all parts are available from stock. Please contact customer service for availability (800) 626-2120.
For more information on bearing capabilities outside of our standard offering, please contact Application Engineering (800) 626-2093.

Rolling Elements: Spherical Roller
Housing: Cast Iron Three Bolt Flange
Self Alignment: +/- 2 Degrees
Lock: Setscrew
Seal: Felt
Optional Seal: Double Lip Contact
Temperature: -20° to 220° F

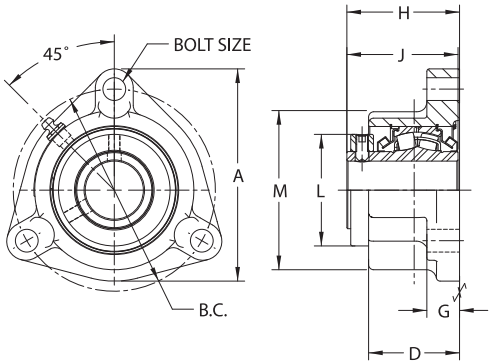

USF3B5000 Series Three-Bolt Flange Units - Collar Mount

Bore Diameter inch	Part No.	Basic Dynamic Rating lb/N	Dimensions inch / mm									Unit Wt. lb/kg
			A	B.C.	D	G	H *	J	L	M	Bolt Size	
1 1/8 1 3/16 1 1/4	USF3B5000-102 USF3B5000-103 USF3B5000-104	20368 90597	5 1/4 133.4	4 1/2 114.3	2 1/4 57.2	25/32 19.8	2 53/64 71.8	2 3/4 69.9	2 49/64 70.2	3 15/16 100.0	3/8	6.9 3.13
1 7/16 1 1/2	USF3B5000-107 USF3B5000-108	20368 90597	5 1/4 133.4	5 127.0	2 1/4 57.2	13/16 20.6	2 53/64 71.8	2 3/4 69.9	2 49/64 70.2	3 15/16 100.0	1/2	6.4 2.91

*For expansion bearings, this dimension can increase by the corresponding value in table VIII on page I-69.

Metric dimensions for reference only.
Not all parts are available from stock. Please contact customer service for availability (800) 626-2120.
For more information on bearing capabilities outside of our standard offering, please contact Application Engineering (800) 626-2093.

Rolling Elements: Spherical Roller
Housing: Insert Bearing
Self Alignment: +/- 2 Degrees
Lock: Setscrew
Seal: Felt
Optional Seal: Double Lip Contact
Temperature: -20° to 220° F

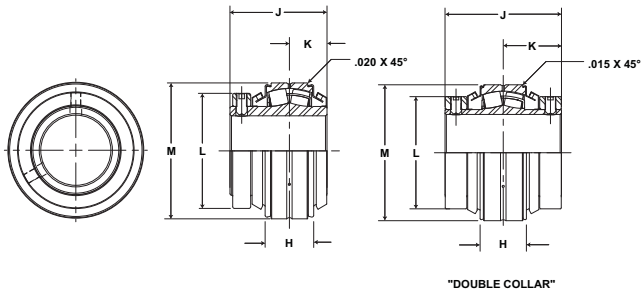

USI5000 Unitized Spherical Roller Bearing Inserts - Collar Mount

Bore Diameter inch	Part No.	Basic Dynamic Rating lb/N	Dimensions inch / mm H	J	K	L	M (Nominal)	Unit Wt. lb/kg
1 1/8 1 3/16 1 1/4 1 7/16 1 1/2	USI5000-102 USI5000-103 USI5000-104 USI5000-107 USI5000-108	20368 90597	1 15/64 31.4	2 3/4 69.9	1 25.4	2 49/64 70.2	3.1493 80.0	3.3 1.50
1 11/16 1 3/4	USI5000-111 USI5000-112	22689 100921	1 7/32 31.0	2 7/8 73.0	1 3/64 26.6	2 3/4 69.9	3.3462 85.0	3.0 1.36
1 15/16 2	USI5000-115 USI5000-200	23520 104617	1 17/64 32.1	2 7/8 73.0	1 1/16 27.0	3 76.2	3.5430 90.0	3.2 1.45
2 3/16	USI5000-203	28087 124931	1 23/64 34.5	3 1/8 79.4	1 9/64 29.0	3 1/4 82.6	3.9367 100.0	3.9 1.77
2 7/16 2 1/2	USI5000-207 USI5000-208	44691 198786	1 11/16 42.9	3 3/8 85.7	1 5/16 33.3	4 101.6	4.7241 120.0	7.3 3.32
2 11/16 2 3/4 2 15/16 3	USI5000-211 USI5000-212 USI5000-215 USI5000-300	47447 211044	1 23/32 43.7	3 7/8 98.4	1 25/64 35.3	4 17/32 115.1	5.1178 130.0	9.9 4.50
3 3/16 3 7/16 3 1/2	USI5000-303 USI5000-307 USI5000-308	72640 323103	2 1/8 54.0	4 15/32 113.5	1 45/64 43.3	5 5/16 134.9	6.2987 160.0	17.8 8.09
3 11/16 3 15/16 4	USI5000-311 USI5000-315 USI5000-400	96050 427230	2 13/32 61.1	4 15/16 125.4	1 55/64 47.2	6 152.4	7.0861 180.0	15.8 7.18
4 7/16 4 1/2	USI5000-407 USI5000-408	111537 496117	2 11/16 68.3	6 3/4 171.5	3 3/8 85.7	6 1/2 165.1	7.8734 200.0	35.2 16.00
4 15/16	USI5000-415	158816 706414	3 21/64 84.5	7 27/64 188.5	3 23/32 94.5	7 1/2 190.5	9.0545 230.0	55.4 25.18
5 7/16	USI5000-507	196682 874842	3 21/32 92.9	9 1/32 229.4	4 33/64 114.7	8 1/2 215.9	9.8419 250.0	72.7 33.05
5 15/16	USI5000-515	196682 874842	4 25/64 111.5	9 25/32 248.4	4 57/64 124.2	10 254.0	11.4166 290.0	117.2 53.27
6 7/16 6 1/2 6 15/16 7	USI5000-608 USI5000-700	334229 1486651	4 55/64 123.4	10 1/2 266.7	5 1/4 133.4	11 279.4	12.5976 320.0	162.5 73.87

Note: 1 1/8" - 4" bore sizes have a single lock collar.
4 7/16" - 7" bore sizes have a double lock collar.

Rolling Elements: Spherical Roller
Housing: Insert Bearing
Self Alignment: +/- 2 Degrees
Lock: Adapter
Seal: Felt
Optional Seal: Double Lip Contact
Temperature: -20° to 220° F

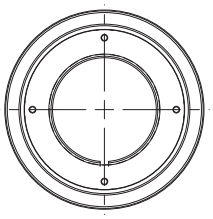

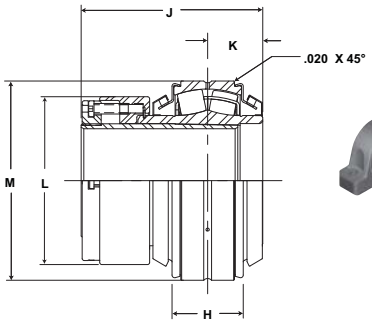

USI5000A Unitized Spherical Roller Bearing Inserts - Adapter Mount

Bore Diameter inch	Part No.	Basic Dynamic Rating lb/N	Dimensions inch / mm H	J	K	L	M (Nominal)	Unit Wt. lb/kg
1 1/8 1 3/16 1 1/4 1 7/16 1 1/2	USI5000A-102 USI5000A-103 USI5000A-104 USI5000A-107 USI5000A-108	20368 90597	1 15/64 31.4	3 11/32 84.9	1 25.4	2 31/32 75.4	3.1493 80.0	3.3 1.50
1 11/16 1 3/4	USI5000A-111 USI5000A-112	22689 100921	1 7/32 29.9	3 29/64 84.6	1 3/64 25.6	2 63/64 73.1	3.3462 82.0	3.5 1.59
1 15/16 2	USI5000A-115 USI5000A-200	23520 104617	1 17/64 32.1	3 1/2 88.9	1 1/16 27.0	3 11/64 80.6	3.5430 90.0	3.7 1.68
2 3/16	USI5000A-203	28087 124931	1 23/64 33.3	3 7/8 94.9	1 9/64 27.9	3 7/16 84.2	3.9367 96.4	4.6 2.09
2 7/16 2 1/2	USI5000A-207 USI5000A-208	44691 198786	1 11/16 42.9	4 5/16 109.5	1 5/16 33.3	3 63/64 101.2	4.7281 120.0	8.3 3.77
2 11/16 2 3/4 2 15/16 3	USI5000A-211 USI5000A-212 USI5000A-215 USI5000A-300	47447 211044	1 23/32 42.1	4 31/64 109.9	1 25/64 34.1	4 25/64 107.6	5.1178 125.4	10.0 4.55
3 3/16 3 7/16 3 1/2	USI5000A-303 USI5000A-307 USI5000A-308	72640 323103	2 1/8 54.0	5 35/64 140.9	1 45/64 43.3	5 15/32 138.9	6.2987 160.0	19.8 9.00
3 11/16 3 15/16 4	USI5000A-311 USI5000A-315 USI5000A-400	96050 427230	2 13/32 59.0	5 15/16 150.8	1 55/64 45.6	5 13/16 142.4	7.0861 173.6	24.4 11.09
4 7/16 4 1/2	USI5000A-407 USI5000A-408	111537 496117	2 11/16 68.3	6 27/64 163.1	2 5/64 52.8	6 11/32 161.1	7.8734 200.0	28.7 13.05
4 15/16 5	USI5000A-415 USI5000A-500	158816 706414	3 21/64 81.5	7 1/8 174.6	2 27/64 59.3	7 13/64 176.5	9.0545 221.8	46.7 21.23
5 7/16	USI5000A-507	196682 874842	3 21/32 92.9	7 7/8 200.0	2 39/64 66.3	7 47/64 196.5	9.8419 250.0	57.7 26.23
5 15/16	USI5000A-515	261346 1162467	4 25/64 111.5	8 11/16 220.7	3 1/64 76.6	8 1/2 215.9	11.1724 290.0	91.3 41.50
6 7/16 6 1/2 6 15/16 7	USI5000A-607 USI5000A-608 USI5000A-615 USI5000A-700	334229 1486651	4 55/64 119.1	9 45/64 237.7	3 5/16 81.2	9 11/16 237.3	12.5976 308.6	118.7 53.95
7 1/2 7 15/16 8	USI5000A-708 USI5000A-715 USI5000A-800	363818 1618262	5 15/64 133.0	10 9/16 268.3	3 19/32 91.3	11 7/64 282.2	14.1732 360.0	178.9 81.32

Metric dimensions for reference only.
Not all parts are available from stock. Please contact customer service for availability (800) 626-2120.
For more information on bearing capabilities outside of our standard offering, please contact Application Engineering (800) 626-2093.

Mounted Tapered Roller

Modular bearing assembly consisting of sealed and lubricated inch or metric tapered bearing with setscrew locking collars contained within a variety of housings types, mounting styles, and housing materials. Mounted tapered roller bearings provide an antifriction solution when supporting rotating shafts with combination radial and thrust loads.

Housing Styles

Pillow Block, Flanges, Take Up Assemblies

Locking Styles

Setscrew

Bore Size Range

1 3/16” to 5” and 35mm to 125mm

Housing Materials

Cast Iron, and Cast Steel

Mounted Tapered Roller Selection Guide

Brand	Image	Series	Housing Style
Sealmaster		RPB	Two Bolt Pillow Block
		RPB	Four Bolt Pillow Block
		ERPB	Expansion Two Bolt Pillow Block
		ERPB	Expansion Four Bolt Pillow Block
		DRPB	Two Bolt Pillow Block
	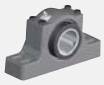	DRPB	Four Bolt Pillow Block
		EDPB	Expansion Two Bolt Pillow Block
	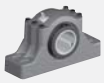	EDPB	Expansion Four Bolt Pillow Block
		RPBXT	Four Bolt Pillow Block (SAF mounting dimensions)
		ERPBXT	Expansion Four Bolt Pillow Block (SAF mounting dimensions)
		SPB	Two Bolt Pillow Block
		SPB	Four Bolt Pillow Block

Lock Type					Size Range		
Double Lock Collar	Single Lock Collar	Housing Material	Standard Seal	Seal Options	Inch	Metric	Page
RPB-2	RPBA-2	Cast Iron	Felt	Contact, Nomex	1 3/16” - 3 1/2”	35 mm - 95 mm	I-13, I-15
RPB-4	RPBA-4	Cast Iron	Felt	Contact, Nomex	2 1/4” - 5”	60 mm - 125 mm	I-14, I-16
ERPB-2	ERPBA-2	Cast Iron	Felt	Contact, Nomex	1 3/4” - 3 1/2”	45 mm - 95 mm	I-17, I-19
ERPB-4	ERPBA-4	Cast Iron	Felt	Contact, Nomex	3 15/16” - 5”	100 mm - 125 mm	I-18, I-20
DRPB-2	DRPBA-2	Cast Iron	Felt	Contact, Nomex	1 3/4” - 3 1/2”	45 mm - 95 mm	I-21, I-23
DRPB-4	DRPBA-4	Cast Iron	Felt	Contact, Nomex	3 15/16” - 4”	100 mm - 105 mm	I-22, I-24
N/A	EDPBA-2	Cast Iron	Felt	Contact, Nomex	1 3/4” - 3 1/2”	100 mm - 105 mm	I-25
N/A	EDPBA-4	Cast Iron	Felt	Contact, Nomex	3 15/16” - 4”	100 mm - 105 mm	I-26
RPBXT-4	N/A	Cast Iron	Felt	Contact, Nomex	2 1/4” - 5”	60 mm - 125 mm	I-27
ERPBXT-4	N/A	Cast Iron	Felt	Contact, Nomex	2 1/4” - 5”	60 mm - 125 mm	I-28
SPB-2	N/A	Cast Steel	Felt	Contact, Nomex	1 1/2” - 3 1/2”	40 mm - 95 mm	I-29
SPB-4	N/A	Cast Steel	Felt	Contact, Nomex	3 15/16” - 5”	100 mm - 125 mm	I-30

Mounted Tapered Roller Selection Guide

Brand	Image	Series	Housing Style
Sealmaster		RFB	Four Bolt Flange
		RFP	Piloted Flange Cartridge
		ERCI	Expansion Cartridge Insert
		RCI	Roller Cartridge Insert
Browning		PBE920	Two Bolt Pillow Block
		PBE920F	Four Bolt Pillow Block
		FBE920	Flange Block
		TUE920	Take Up
		T1000	Take Up Frame

Lock Type					Size Range		
Double Lock Collar	Single Lock Collar	Housing Material	Standard Seal	Seal Options	Inch	Metric	Page
RFB	RFBA	Cast Iron	Felt	Contact, Nomex	1 3/16” - 4”	35 mm - 105 mm	I-31 to I-32
RFP	RFPA	Cast Iron	Felt	Contact, Nomex	1 3/16” - 5”	35 mm - 125 mm	I-33 to I-34
ERCI	ERCIA	N/A	Felt	Contact, Nomex	1 3/4” - 5”	45 mm - 125 mm	I-35
RCI	RCIA	N/A	Felt	Contact, Nomex	1 3/16” - 5”	35 mm - 125 mm	I-37
PBE920	N/A	Cast Iron	Contact	N/A	1 3/16” - 3 1/2”	N/A	I-42
PBE920F	N/A	Cast Iron	Contact	N/A	2 1/4” - 5”	N/A	I-42
FBE920	N/A	Cast Iron	Contact	N/A	1 3/16” - 4”	N/A	I-43
TUE920	N/A	Cast Iron	Contact	N/A	1 3/8” - 4 7/16”	N/A	I-44
N/A	N/A	N/A	N/A	N/A	1 1/2” - 4 1/2”	N/A	I-45 to I-46

Sealmaster Tapered Roller Bearings

Sealmaster® RPB mounted tapered roller bearings are a dimensionally interchangeable upgrade from competitive Type E bearings. The exclusive features include unitized replaceable inserts, self aligning capability, split housing and the Sealmaster alignment pin which provides for a direct path for lubrication into the bearing and helps prevent outer ring rotation. The Sealmaster RPB is available with two traditional setscrew locking collars for easy installation. The felt seal with flinger provides a good balance between contaminant entry, grease retention and friction. Depending on application requirements, these bearings are available in both inch and metric with a wide variety of housing, sealing, and lubrication options as illustrated on the pages to follow.

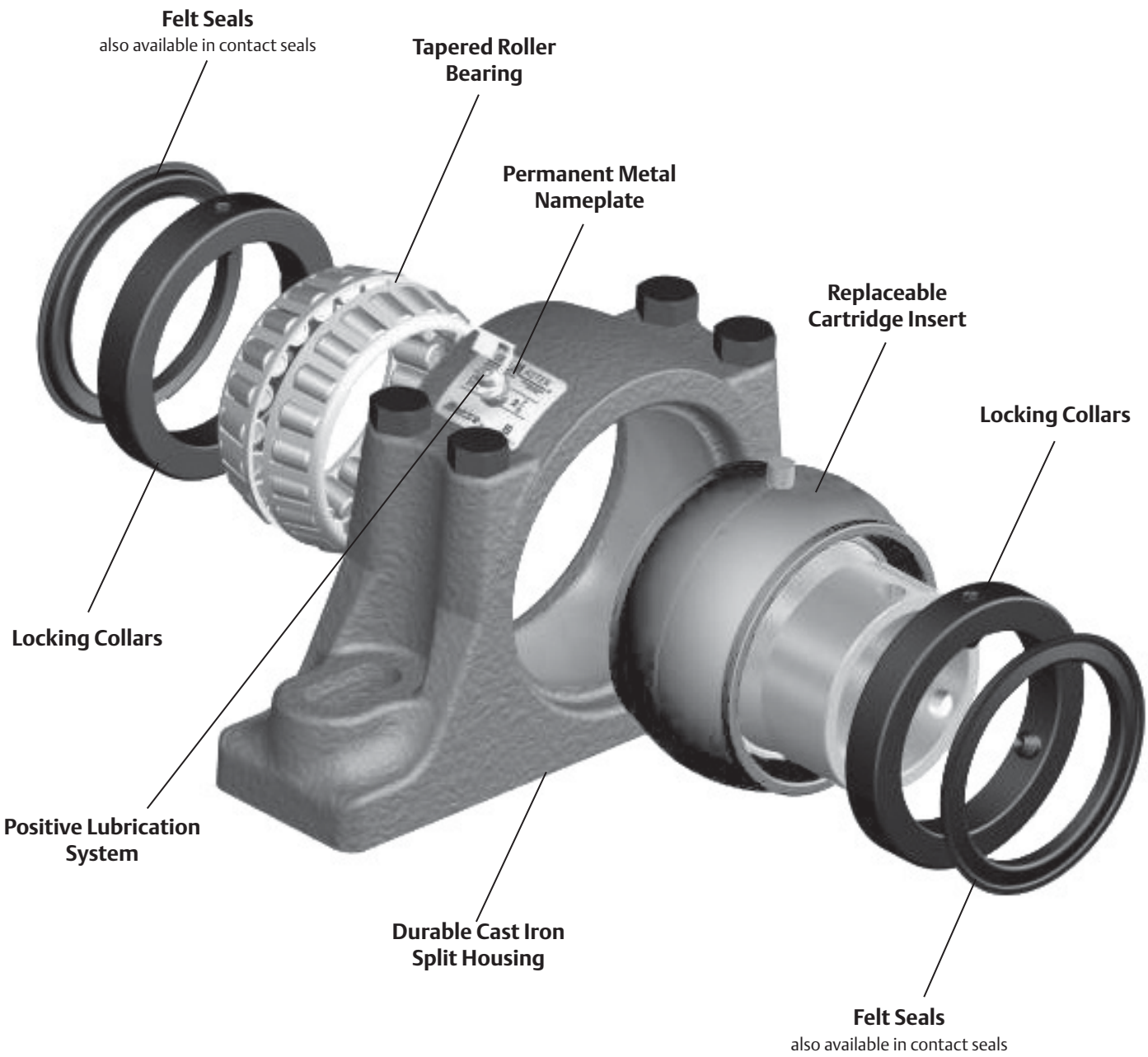

Tapered Roller Bearing Nomenclature

Optional Prefix
- E - Expansion

Housing Type (*see below)

Optional Suffix
- A - Single Lock Collar
- No Suffix - Two Lock Collars

Bore Size
- Inch - First Digit - Number of Inches
  - Second & Third Digit - Number of 1/16” of Inches (ex. 107 = 1 7/16”)
- Metric - 65 mm = 65 mm

Seal Option
- C - Contact Seal
- N - Nomex Seal
- No Suffix - Felt Seal

Bolts
- 2 - Two Bolt Base
- 4 - Four Bolt Base

Options
- CR - Corrosion Resistant (see page K-19)
- AH - Air Handling
- TF - Tight Fit
- RC - Reduced Internal Clearance

ERPBA - 107 - C2CR

***Housing Type**
- RPB - Roller Pillow Block
- DRPB - Roller Pillow Block (DI)
- RPBXT - Roller Pillow Block (SAF Mounting Dim.)
- SPB - Steel Pillow Block
- RFB - Roller Flange Block
- RFP - Roller Flange Pilot

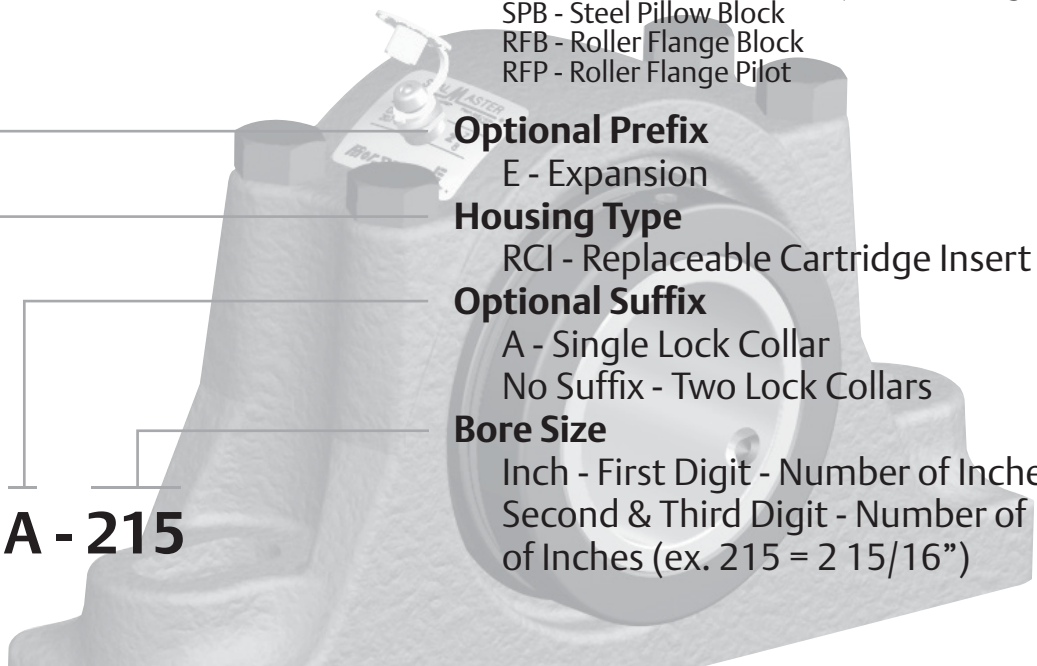

Optional Prefix
- E - Expansion

Housing Type
- RCI - Replaceable Cartridge Insert

Optional Suffix
- A - Single Lock Collar
- No Suffix - Two Lock Collars

Bore Size
- Inch - First Digit - Number of Inches
- Second & Third Digit - Number of 1/16” of Inches (ex. 215 = 2 15/16”)

ERCI - A - 215

Features and Benefits

Tapered Roller Bearings

Sealmaster RPB series contains heavy duty tapered roller bearings for radial, thrust and combination loading.

Durable Cast Iron Split Housing

Durable cast iron split housings allow for quick insert replacement when change-out is required. Once installed, the base remains fixed and aligned with the shaft, reducing downtime and maintenance costs. Guide pin in the housing base orientates the proper assembly of the cap during replacement. Pillow block housings have elongated bolt holes for interchangeability with other competitive units. Permanent metal nameplate allows for easy identification after years of operation. Multiple housing styles include 2 and 4 bolt pillow block (RPB), 4 bolt flange (RFB), Piloted flange (RFP). Inch and metric bore size from 1 3/16" – 5” bore and 35 to 125 mm.

Replaceable Cartridge Insert (RCI)

The heart of the RPB is the unitized, self-aligning cartridge insert with integral seals and double locking collars. The replaceable cartridge insert can accommodate +/- 3° static misalignment and is factory sealed and lubricated. The cartridges fit all housing styles and are field replaceable for quick change out. RCI outer races are black oxide treated.

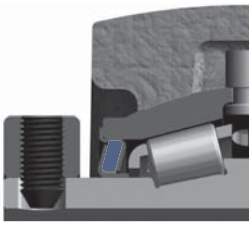

Felt Seals

Patented race mounted felt lined flinger seals help filter out contaminants and are not subject to misalignment distortion. The felt acts as a filter to help exclude contaminants. The rotating flinger helps repel contaminant build-up on the seal surfaces. Felt seal stampings are black oxided.

Features and Benefits continued

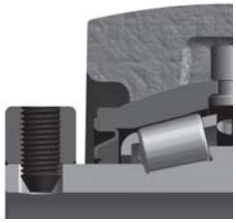

Single Lip Contact Seal

Single lip race mounted contact seals for dry, dirty and wet conditions. It's composed of a steel inner seal with a bonded elastomeric sealing member. The steel inner seal is press fit into the inside diameter of the outer race, while the bonded elastomeric sealing member is held in the proper rubbing contact position on the outer diameter of the inner race. Contact seal stampings are black oxided.

Positive Lubrication System

Positive lubrication system provides direct grease path to the bearing. The unit is designed with two lubrication ports in the cartridge OD so that one of lube holes in cartridge lines up with grease fitting regardless of insert orientation in the housing. A rubber grommet in housing top recess directs lubricant into bearing cavity. Extra lubrication ports help prevent seal damage by venting excess pressure from over greasing. Sealmaster alignment pin helps prevent outer race rotation.

Collar Mount System

Two locking collars are standard on all units with two setscrews at 120° for balanced three point contact. Precision manufactured diamond faceted point setscrew design contributes to improved clamping and resistance to back out. Single locking collars are available where space limitations are present. Locking collars are black oxided.

Additional Configurations

Expansion Roller Bearing Pillow Blocks

Axial shaft expansion is compensated by a non-expansion (fixed) and expansion (float) arrangement. It is recommended to use both units on one shaft in high temperature applications to help account for linear shaft expansion.

ERCI Cylindrical Cartridge Inserts

Cylindrical cartridge insets (ERCI) are used in standard expansion ERPB housings or can be mounted into customer designed housings.

Additional Configurations continued

DRPB Series
Interchangeable with most type DI mounting dimensions

DRPBA Series
Interchangeable with most Type K mounting dimensions

RPBXT Series
Interchangeable with four bolt SAF mounting dimensions in shaft sizes from 2 1/4” - 5” (60mm - 125mm).

SPB Series
This series incorporates all features of the standard RPB with cast steel housings in two and four bolt pillow blocks in shaft sizes from 1 1/2” - 5” (40mm - 125mm).

Air Handling
RPB-AH Series designed for HVAC applications. It incorporates all features of the standard RPB with a custom AH fit between the bearing cartridge OD and the bearing housing, which provides lower misalignment torque.
Available in the RPB, RFB & RFP and DRPB Series

RPB-MM Series
Incorporates all the features of the standard RPB but with metric bore sizes from 35-125mm and metric setscrews

Options

- Custom housing configurations
- Custom lubricants, including synthetic and food grade greases and oil saturated polymers

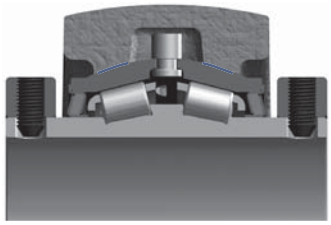

Tight Housing Fit "TF"

(TF suffix) for applications with vibration and rotating loads

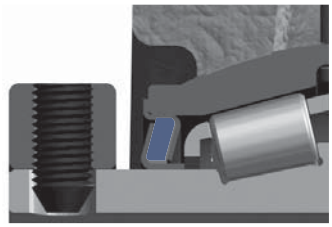

High Temperature "N"

High temperature bearing with Nomex* seal and high temperature synthetic grease.

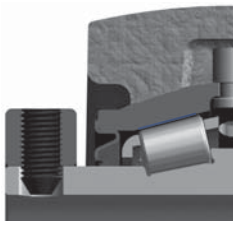

Reduced Bearing Internal Clearance "RC"

(RC suffix) for specific application requirements

* The following trade names, trademarks and/or registered trademarks are used in this material by Regal Power Transmission Solutions are NOT owned or controlled by Regal Power Transmission Solutions and are believed to be owned by the following parties: Nomex; E.I. du Pont de Nemuns and company. Regal Power Transmission Solutions cannot and does not represent or warrant the accuracy of this information.

Rolling Elements: Tapered Roller
Housing: Cast Iron Two Bolt Pillow Block
Self Alignment: +/- 3 Degrees
Lock: Setscrew, Double Collar
Seal: Felt
Optional Seal: Single Lip Contact
Temperature: -20°F to 220°F

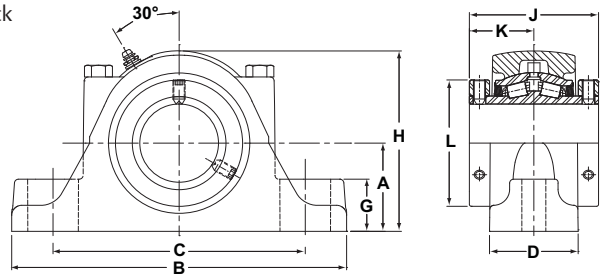

RPB Series Two-Bolt Base Pillow Blocks

Bore Diameter inch	Bore Diameter mm	Part No.	Bearing Insert No.	Basic Dynamic Rating lb/N	Dimensions inch / mm A	B	C Min.	C Max.	D	G	H	J	K	L	Bolt Size	Unit Wt. lb/kg
1 3/16		RPB-103-2	RCI-103	2975	1 1/2	6 1/4	4 9/16	4 15/16	1 7/8	7/8	3 1/8	2 3/4	1 3/8	2 1/4	1/2	4.8
1 1/4		RPB-104-2	RCI-104	13233	38.1	158.8	115.9	125.4	47.6	22.2	79.4	69.9	34.9	57.2		2.18
1 3/8		RPB-106-2	RCI-106	4760	1 7/8	7 1/4	5 5/16	5 15/16	2 1/16	1 1/8	3 13/16	3	1 1/2	2 5/8	1/2	7.7
	35	RPB-35MM-2	RCI-35MM	21174	47.6	184.2	134.9	150.8	52.4	28.6	96.8	76.2	76.2	66.7		3.5
1 7/16		RPB-107-2	RCI-107													
1 1/2		RPB-108-2	RCI-108	6140	2 1/8	7 3/4	5 9/16	6 7/16	2 5/16	1 1/4	4 3/8	3 3/8	1 11/16	2 7/8	1/2	10.9
	40	RPB-40MM-2	RCI-40MM	27312	54.0	196.9	141.3	163.5	58.7	31.8	111.1	85.7	42.9	73.0		4.94
1 5/8		RPB-110-2	RCI-110													
1 11/16		RPB-111-2	RCI-111													
1 3/4		RPB-112-2	RCI-112	8070	2 1/4	8 7/8	6 5/16	7 3/16	2 7/16	1 1/4	4 5/8	3 1/2	1 3/4	3 1/4	5/8	13.2
	45	RPB-45MM-2	RCI-45MM	35897	57.2	225.4	160.3	182.6	61.9	31.8	117.5	88.9	44.5	82.6		5.99
1 15/16		RPB-115-2	RCI-115													
	50	RPB-50MM-2	RCI-50MM													
2		RPB-200-2	RCI-200													
	55	RPB-55MM-2	RCI-55MM	8570	2 1/2	9 5/8	6 11/16	7 15/16	2 9/16	1 7/16	5 1/8	3 3/4	1 7/8	3 5/8	5/8	15.7
2 3/16		RPB-203-2	RCI-203	38121	63.5	244.5	169.9	201.6	65.1	36.5	130.2	95.3	47.6	92.1		7.12
2 1/4		RPB-204-2	RCI-204	9030	2 3/4	10 3/8	6 15/16	8 11/16	2 3/4	1 5/8	5 5/8	4	2	3 15/16	5/8	20.7
	60	RPB-60MM-2	RCI-60MM	40167	69.9	263.5	176.2	220.7	69.9	41.3	142.9	101.6	50.8	100.0		9.39
2 7/16		RPB-207-2	RCI-207													
2 1/2		RPB208-2	RCI-208													
	65	RPB-65MM-2	RCI-65MM													
2 11/16		RPB-211-2	RCI-211	9630	3 1/8	11 3/4	8 1/16	9 11/16	3	1 3/4	6 3/8	4 1/2	2 1/4	4 23/32	3/4	29.3
2 3/4		RPB-212-2	RCI-212	42836	79.4	298.5	204.8	246.1	76.2	44.5	161.9	114.3	57.2	119.9		13.29
	70	RPB-70MM-2	RCI-70MM													
2 15/16		RPB-215-2	RCI-215													
	75	RPB-75MM-2	RCI-75MM													
3		RPB-300-2	RCI-300													
	80	RPB-80MM-2	RCI-80MM	15320	3 3/4	13 3/4	10 1/8	11 1/4	4 1/8	2	7 3/4	5	2 1/2	5 7/16	7/8	56.0
3 3/16		RPB-303-2	RCI-303	65147	95.3	349.3	257.2	285.8	104.8	52.4	196.9	127.0	63.5	138.1		25.40
3 1/4		RPB-304-2	RCI-304													
	85	RPB-85MM-2	RCI-85MM													
3 7/16		RPB-307-2	RCI-307													
3 1/2		RPB-308-2	RCI-308													
	90	RPB-90MM-2	RCI-90MM													
	95	RPB-95MM-2	RCI-95MM													

Metric dimensions for reference only.
Not all parts are available from stock. Please contact customer service for availability (800) 626-2120.
For more information on bearing capabilities outside of our standard offering, please contact Application Engineering (800) 626-2093.

Rolling Elements: Tapered Roller
Housing: Cast Iron Four Bolt Pillow Block
Self Alignment: +/- 3 Degrees
Lock: Setscrew, Double Collar
Seal: Felt
Optional Seal: Single Lip Contact
Temperature: -20°F to 220°F

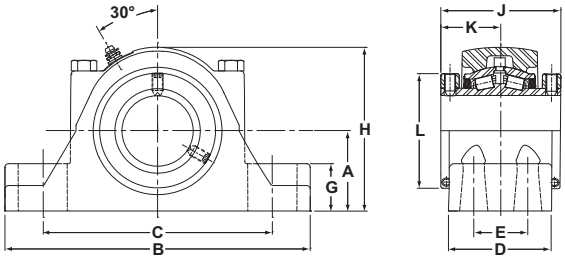

RPB Series Four-Bolt Base Pillow Blocks

Bore Diameter inch	Bore Diameter mm	Part No.	Bearing Insert No.	Basic Dynamic Rating lb/N	Dimensions inch / mm A	B	C Min.	C Max.	D	E	G	H	J	K	L	Bolt Size	Unit Wt. lb/kg
2 1/4		RPB-204-4	RCI-204	9030 40167	2 3/4 69.9	10 3/8 263.5	7 3/4 196.9	8 3/4 222.3	3 1/2 88.9	1 7/8 47.6	1 5/8 41.3	5 5/8 142.9	4 101.6	2 50.8	3 15/16 100.0	5/8	22.4 10.16
	60	RPB-60MM-4	RCI-60MM														
2 7/16		RPB-207-4	RCI-207														
2 1/2		RPB-208-4	RCI-208														
	65	RPB-65MM-4	RCI-65MM														
2 11/16		RPB-211-4	RCI-211	9630 42836	3 1/8 79.4	11 3/4 298.5	8 3/4 222.3	10 254.0	3 3/4 95.3	2 1/8 54.0	1 3/4 44.5	6 3/8 161.9	4 1/2 114.3	2 1/4 57.2	4 23/32 119.9	5/8	31.5 14.29
2 3/4		RPB-212-4	RCI-212														
	70	RPB-70MM-4	RCI-70MM														
2 15/16		RPB-215-4	RCI-215														
	75	RPB-75MM-4	RCI-75MM														
3		RPB-300-4	RCI-300														
	80	RPB-80MM-4	RCI-80MM	15320 68147	3 3/4 95.3	13 3/4 349.3	10 9/16 268.3	11 1/2 292.1	4 1/2 114.3	2 3/8 60.3	2 1/16 52.4	7 3/4 196.9	5 127.0	2 1/2 63.5	5 7/16 138.1	3/4	59.6 27.03
3 3/16		RPB-303-4	RCI-303														
3 1/4		RPB-304-4	RPB-304														
	85	RPB-85MM-4	RCI-85MM														
3 7/16		RPB-307-4	RCI-307														
3 1/2		RPB-308-4	RCI-308														
	90	RPB-90MM-4	RCI-90MM														
	95	RPB-95MM-4	RCI-95MM														
3 15/16		RPB-315-4	RCI-315	20980 93324	4 1/4 108.0	15 1/4 387.4	11 279.4	13 330.2	4 1/2 114.3	2 1/4 57.2	2 7/16 61.9	8 5/8 219.1	6 1/4 158.8	3 1/8 79.4	5 15/16 150.8	3/4	76.9 34.88
	100	RPB-100MM-4	RCI-100MM														
4		RPB-400-4	RCI-400														
	105	RPB-105MM-4	RCI-105MM														
	110	RPB-110MM-4	RCI-110MM	25750 114542	4 3/4 120.7	16 1/2 419.1	11 3/4 298.5	13 7/8 352.4	4 5/8 117.5	2 1/2 63.5	2 3/4 69.9	9 5/8 244.5	6 3/4 171.5	3 3/8 85.7	6 13/32 162.7	3/4	95.6 43.36
4 7/16		RPB-407-4	RCI-407														
4 1/2		RPB-408-4	RCI-408														
	115	RPB-115MM-4	RCI-115MM														
	120	RPB-120MM-4	RCI-120MM	35520 158001	5 1/2 139.7	18 1/2 469.9	13 1/2 342.9	15 7/8 403.2	5 1/8 130.2	2 3/4 69.9	3 1/8 79.4	11 279.4	7 1/4 184.2	3 5/8 92.1	7 13/32 188.1	7/8	143.6 65.14
	125	RPB-125MM-4	RCI-125MM														
4 15/16		RPB-415-4	RCI-415														
5		RPB-500-4	RCI-500														

Rolling Elements: Tapered Roller
Housing: Cast Iron Two Bolt Pillow Block
Self Alignment: +/- 3 Degrees
Lock: Setscrew, Single Collar
Seal: Felt
Optional Seal: Single Lip Contact
Temperature: -20°F to 220°F

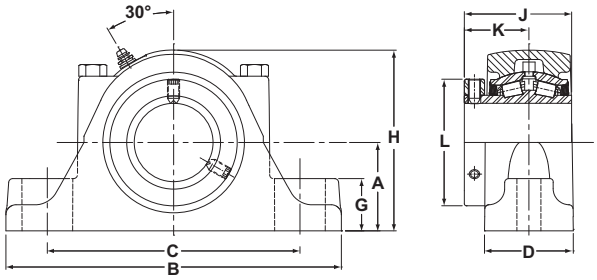

RPBA Series Two-Bolt Base Pillow Blocks - Single Lock Collar

Bore Diameter inch	Bore Diameter mm	Part No.	Bearing Insert No.	Basic Dynamic Rating lb/N	Dimensions inch / mm A	B	C Min.	C Max.	D	G	H	J	K	L	Bolt Size	Unit Wt. lb/kg
1 3/16		RPBA-103-2	RCIA-103	2975	1 1/2	6 1/4	4 9/16	4 15/16	1 7/8	7/8	3 1/8	2 3/8	1 3/8	2 1/4	1/2	4.8
1 1/4		RPBA-104-2	RCIA-104	13233	38.1	158.8	115.9	125.4	47.6	22.2	79.4	60.3	34.9	57.2		2.18
1 3/8		RPBA-106-2	RCIA-106	4760	1 7/8	7 1/4	5 5/16	5 15/16	2 1/16	1 1/8	3 13/16	2 17/32	1 1/2	2 5/8	1/2	7.7
	35	RPBA-35MM-2	RCI-35MM	21174	47.6	184.2	134.9	150.8	52.4	28.6	96.8	64.3	38.1	66.7		3.49
1 7/16		RPBA-107-2	RCIA-107													
1 1/2		RPBA-108-2	RCIA-108													
	40	RPBA-40MM-2	RCI-40MM	6140	2 1/8	7 3/4	5 9/16	6 7/16	2 5/16	1 1/4	4 3/8	2 27/32	1 11/16	2 7/8	1/2	10.9
1 5/8		RPBA-110-2	RCIA-110	27312	54.0	196.9	141.3	163.5	58.7	31.8	111.1	72.2	42.9	73.0		4.94
1 11/16		RPBA-111-2	RCIA-111													
1 3/4		RPBA-112-2	RCIA-112													
	45	RPBA-45MM-2	RCI-45MM	8070	2 1/4	8 7/8	6 5/16	7 3/16	2 7/16	1 1/4	4 5/8	2 61/64	1 3/4	3 1/4	5/8	13.2
1 15/16		RPBA-115-2	RCIA-115	35897	57.2	225.4	160.3	182.6	61.9	31.8	117.5	75.0	44.5	82.6		5.99
	50	RPBA-50MM-2	RCI-50MM													
2		RPBA-200-2	RCIA-200													
	55	RPBA-55MM-2	RCI-55MM	8570	2 1/2	9 5/8	6 11/16	7 15/16	2 9/16	1 7/16	5 1/8	3 1/8	1 7/8	3 5/8	5/8	15.7
2 3/16		RPBA-203-2	RCIA-203	38121	63.5	244.5	169.9	201.6	65.1	36.5	130.2	79.4	47.6	92.1		7.12
2 1/4		RPBA-204-2	RCIA-204													
	60	RPBA-60MM-2	RCI-60MM	9030	2 3/4	10 3/8	6 15/16	8 11/16	2 3/4	1 5/8	5 5/8	3 5/16	2	3 15/16	5/8	20.7
2 7/16		RPBA-207-2	RCIA-207	40167	69.9	263.5	176.2	220.7	69.9	41.3	142.9	84.1	50.8	100.0		9.39
2 1/2		RPBA-208-2	RCIA-208													
	65	RPBA-65MM-2	RCI-65MM													
2 11/16		RPBA-211-2	RCIA-211													
2 3/4		RPBA-212-2	RCIA-212													
	70	RPBA-70MM-2	RCI-70MM	9630	3 1/8	11 3/4	8 1/16	9 11/16	3	1 3/4	6 3/8	3 11/16	2 1/4	4 23/32	3/4	29.3
2 15/16		RPBA-215-2	RCIA-215	42836	79.4	298.5	204.8	246.1	76.2	44.5	161.9	93.7	57.2	119.9		13.29
	75	RPBA-75MM-2	RCI-75MM													
3		RPBA-300-2	RCIA-300													
	80	RPBA-80MM-2	RCI-80MM													
3 3/16		RPBA-303-2	RCIA-303													
3 1/4		RPBA-304-2	RCIA-304													
	85	RPBA-85MM-2	RCI-85MM	15320	3 3/4	13 3/4	10 1/8	11 1/4	4 1/8	2	7 3/4	4 3/16	2 1/2	5 7/16	7/8	56
3 7/16		RPBA-307-2	RCIA-307	68147	95.3	349.3	257.2	285.8	104.8	50.8	196.9	106.4	63.5	138.1		25.40
3 1/2		RPBA-308-2	RCIA-308													
	90	RPBA-90MM-2	RCI-90MM													
	95	RPBA-95MM-2	RCI-95MM													

Metric dimensions for reference only.
Not all parts are available from stock. Please contact customer service for availability (800) 626-2120.
For more information on bearing capabilities outside of our standard offering, please contact Application Engineering (800) 626-2093.

Rolling Elements: Tapered Roller
Housing: Cast Iron Four Bolt Pillow Block
Self Alignment: +/- 3 Degrees
Lock: Setscrew, Single Collar
Seal: Felt
Optional Seal: Single Lip Contact
Temperature: -20°F to 220°F

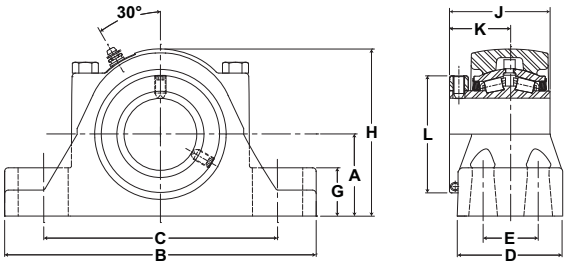

RPBA Series Four-Bolt Base Pillow Blocks

Bore Diameter inch	Bore Diameter mm	Part No.	Bearing Insert No.	Basic Dynamic Rating lb/N	Dimensions inch / mm A	B	C Min.	C Max.	D	E	G	H	J	K	L	Bolt Size	Unit Wt. lb/kg
2 1/4		RPBA-204-4	RCIA-204														
	60	RPBA-60MM-4	RCI-60MM	9030	2 3/4	10 3/8	7 3/4	8 3/4	3 1/2	1 7/8	1 5/8	5 5/8	3 5/16	2	3 15/16	5/8	22.4
2 7/16		RPBA-207-4	RCIA-207	40167	69.9	263.5	196.9	222.3	88.9	47.6	41.3	142.9	84.1	50.8	100.0		10.16
2 1/2		RPBA-208-4	RCIA-208														
	65	RPBA-65MM-4	RCI-65MM														
2 11/16		RPBA-211-4	RCIA-211														
2 3/4		RPBA-212-4	RCIA-212														
	70	RPBA-70MM-4	RCI-70MM	9630	3 1/8	11 3/4	8 3/4	10	3 3/4	2 1/8	1 3/4	6 3/8	3 11/16	2 1/2	4 23/32	5/8	31.5
2 15/16		RPBA-215-4	RCIA-215	42836	79.4	298.5	222.3	254.0	95.3	54.0	44.5	161.9	93.7	63.5	119.9		14.29
	75	RPBA-75MM-4	RCI-75MM														
3		RPBA-300-4	RCIA-300														
	80	RPBA-80MM-4	RCI-80MM														
3 3/16		RPBA-303-4	RCIA-303														
3 1/4		RPBA-304-4	RCIA-304														
	85	RPBA-85MM-4	RCI-85MM	15320	3 3/4	13 3/4	10 9/16	11 1/2	4 1/2	2 3/8	2 1/16	7 3/4	4 3/16	2 1/2	5 7/16	3/4	59.8
3 7/16		RPBA-307-4	RCIA-307	68147	95.3	349.3	268.3	292.1	114.3	60.3	52.4	196.9	106.4	63.5	138.1		27.12
3 1/2		RPBA-308-4	RCIA-308														
	90	RPBA-90MM-4	RCI-90MM														
	95	RPBA-95MM-4	RCI-95MM														
3 15/16		RPBA-315-4	RCIA-315														
	100	RPBA-100MM-4	RCI-100MM	20980	4 1/4	15 1/4	11	13	4 1/2	2 1/4	2 7/16	8 5/8	5 1/4	3 1/8	5 15/16	3/4	76.9
4		RPBA-400-4	RCIA-400	93324	108.0	387.4	279.4	330.2	114.3	57.2	61.9	219.1	133.4	79.4	150.8		34.88
	105	RPBA-105MM-4	RCI-105MM														
	110	RPBA-110MM-4	RCI-110MM														
4 7/16		RPBA-407-4	RCIA-407	25750	4 3/4	16 1/2	11 3/4	13 7/8	4 5/8	2 1/2	2 7/8	9 5/8	5 1/2	3 3/8	6 13/32	3/4	95.6
4 1/2		RPBA-408-4	RCIA-408	114542	120.7	419.1	298.5	352.4	117.5	63.5	73.0	244.5	139.7	85.7	162.7		43.36
	115	RPBA-115MM-4	RCI-115MM														
	120	RPBA-120MM-4	RCI-120MM														
	125	RPBA-125MM-4	RCI-125MM	35520	5 1/2	18 1/2	13 1/2	15 7/8	5 1/8	2 3/4	3 1/8	11	6 13/64	3 5/8	7 13/32	7/8	143.6
4 15/16		RPBA-415-4	RCIA-415	158001	139.7	469.9	342.9	403.2	130.2	69.9	79.4	279.4	157.6	92.1	188.1		65.14
5		RPBA-500-4	RCIA-500														

Rolling Elements: Tapered Roller
Housing: Cast Iron Two Bolt Pillow Block
Self Alignment: +/- 3 Degrees
Lock: Setscrew, Double Collar
Seal: Felt
Optional Seal: Single Lip Contact
Temperature: -20°F to 220°F

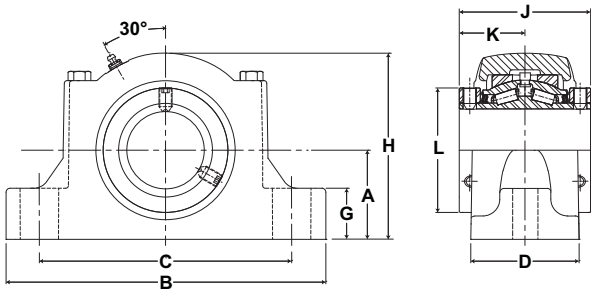

ERPB Expansion Series Two-Bolt Base Pillow Blocks

Bore Diameter inch	Bore Diameter mm	Part No.	Bearing Insert No.	Basic Dynamic Rating lb/N	Dimensions inch / mm A	B	C Min.	C Max.	D	G	H	J	K	L	Bolt Size	Total Expansion	Unit Wt. lb/kg
1 3/4		ERPB-112-2	ERCI-112														
	45	ERPB-45MM-2	ERCI-45MM														
1 15/16		ERPB-115-2	ERCI-115	8070 35897	2 1/4 57.2	8 7/8 225.4	6 5/16 160.3	7 3/16 182.6	2 57/64 73.4	1 1/4 31.8	4 7/8 123.8	3 1/2 88.9	1 3/4 44.5	3 1/4 82.6	5/8	3/16 4.8	14.9 6.76
	50	ERPB-50MM-2	ERCI-50MM														
2		ERPB-200-2	ERCI-200														
	55	ERPB-55MM-2	ERCI-55MM	8570	2 1/2	9 5/8	6 11/16	7 15/16	3 1/32	1 7/16	5 5/16	3 3/4	1 7/8	3 5/8	5/8	3/16	17.8
2 3/16		ERPB-203-2	ERCI-203	38121	63.5	244.5	169.9	201.6	77.0	36.5	134.9	95.3	47.6	92.1		4.8	8.07
2 1/4		ERPB-204-2	ERCI-204														
	60	ERPB-60MM-2	ERCI-60MM														
2 7/16		ERPB-207-2	ERCI-207	9030 40167	2 3/4 69.9	10 3/8 263.5	6 15/16 176.2	8 11/16 220.7	3 13/32 86.5	1 5/8 41.3	5 3/4 146.1	4 101.6	2 50.8	3 15/16 100.0	5/8	1/4 6.4	23.0 10.43
2 1/2		ERPB-208-2	ERCI-208														
	65	ERPB-65MM-2	ERCI-65MM														
2 11/16		ERPB-211-2	ERCI-211														
2 3/4		ERPB-212-2	ERCI-212														
	70	ERPB-70MM-2	ERCI-70MM	9630 42836	3 1/8 79.4	11 3/4 298.5	8 1/16 204.8	9 11/16 246.1	3 31/64 88.5	1 3/4 44.5	6 9/16 166.7	4 33/64 114.7	2 1/4 57.3	4 23/32 119.9	3/4	5/16 7.9	32.0 14.51
2 15/16		ERPB-215-2	ERCI-215														
	75	ERPB-75MM-2	ERCI-75MM														
3		ERPB-300-2	ERCI-300														
	80	ERPB-80MM-2	ERCI-80MM														
3 3/16		ERPB-303-2	ERCI-303														
3 1/4		ERPB-304-2	ERCI-304														
	85	ERPB-85MM-2	ERCI-85MM	15320 68147	3 3/4 95.3	13 3/4 349.3	10 1/8 257.2	11 1/4 285.8	4 33/64 114.7	2 1/16 52.4	7 15/16 201.6	5 127.0	2 1/2 63.5	5 7/16 138.1	7/8	5/16 7.9	64.0 29.03
3 7/16		ERPB-307-2	ERCI-307														
3 1/2		ERPB-308-2	ERCI-308														
	90	ERPB-90MM-2	ERCI-90MM														
	95	ERPB-95MM-2	ERCI-95MM														

Metric dimensions for reference only.
Not all parts are available from stock. Please contact customer service for availability (800) 626-2120.
For more information on bearing capabilities outside of our standard offering, please contact Application Engineering (800) 626-2093.

Rolling Elements: Tapered Roller
Housing: Cast Iron Four Bolt Pillow Block
Self Alignment: +/- 3 Degrees
Lock: Setscrew, Double Collar
Seal: Felt
Optional Seal: Single Lip Contact
Temperature: -20°F to 220°F

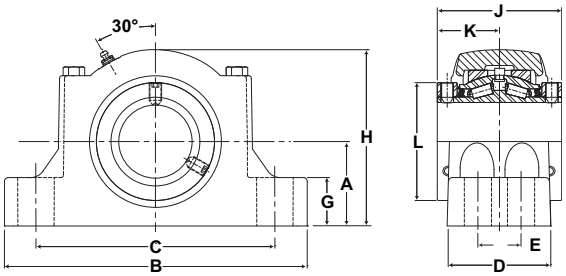

ERPB Expansion Series Four-Bolt Base Pillow Blocks

Bore Diameter inch	Bore Diameter mm	Part No.	Bearing Insert No.	Basic Dynamic Rating lb/N	Dimensions inch / mm A	B	C Min.	C Max.	D	E	G	H	J	K	L	Bolt Size	Total Expansion	Unit Wt. lb/kg
3 15/16		ERPB-315-4	ERCI-315															
	100	ERPB-100MM-4	ERCI-100MM	20980	4 1/4	15 1/4	11	13	5 5/32	2 1/4	2 7/16	8 7/8	6 1/4	3 1/8	5 15/16	3/4	3/8	90.0
4		ERPB-400-4	ERCI-400	93324	108.0	387.4	279.4	330.2	131.0	57.2	61.9	225.4	158.8	79.4	150.8		9.5	40.82
	105	ERPB-105MM-4	ERCI-105MM															
	110	ERPB-110MM-4	ERCI-110MM															
4 7/16		ERPB-407-4	ERCI-407	25750	4 3/4	16 1/2	11 3/4	13 7/8	5 3/8	2 1/2	2 3/4	9 7/8	6 3/4	3 3/8	6 13/32	3/4	3/8	110.6
4 1/2		ERPB-408-4	ERCI-408	114542	120.7	419.1	298.5	352.4	136.5	63.5	69.9	250.8	171.5	85.7	162.7		9.5	50.2
	115	ERPB-115MM-4	ERCI-115MM															
	120	ERPB-120MM-4	ERCI-120MM															
	125	ERPB-125MM-4	ERCI-125MM	35520	5 1/2	18 1/2	13 1/2	15 7/8	6 5/64	2 3/4	3 1/8	11 5/16	7 1/4	3 5/8	7 13/32	7/8	3/8	161.0
4 15/16		ERPB-415-4	ERCI-415	158001	139.7	469.9	342.9	403.2	154.4	69.9	79.4	287.3	184.2	92.1	188.1		9.5	73.03
5		ERPB-500-4	ERCI-500															

Rolling Elements: Tapered Roller
Housing: Cast Iron Two Bolt Pillow Block
Self Alignment: +/- 3 Degrees
Lock: Setscrew, Single Collar
Seal: Felt
Optional Seal: Single Lip Contact
Temperature: -20°F to 220°F

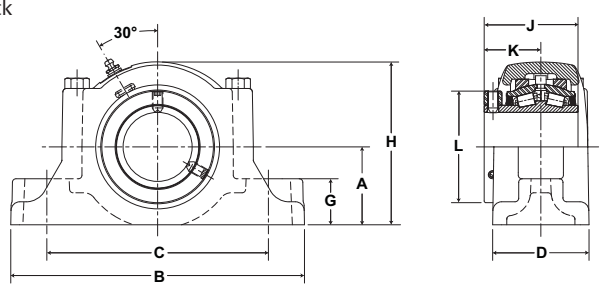

ERPBA Expansion Series Two-Bolt Base Pillow Blocks

Bore Diameter inch	Bore Diameter mm	Part No.	Bearing Insert No.	Basic Dynamic Rating lb/N	Dimensions inch / mm A	B	C Min.	C Max.	D	G	H	J	K	L	Bolt Size	Total Expansion	Unit Wt. lb/kg
1 3/4		ERPBA-112-2	ERCIA-112														
	45	ERPBA-45MM-2	ERCI-45MM														
1 15/16		ERPBA-115-2	ERCIA-115	8070 35897	2 1/4 57.2	8 7/8 225.4	6 5/16 160.3	7 3/16 182.6	2 57/64 73.4	1 1/4 31.8	4 7/8 123.8	2 61/64 75.0	1 13/64 30.6	3 1/4 82.6	5/8	3/16 4.8	14.9 6.76
	50	ERPBA-50MM-2	ERCI-50MM														
2		ERPBA-200-2	ERCIA-200														
	55	ERPBA-55MM-2	ERCI-55MM	8570	2 1/2	9 5/8	6 11/16	7 15/16	3 1/32	1 7/16	5 5/16	3 1/8	1 1/4	3 5/8	5/8	3/16	17.8
2 3/16		ERPBA-203-2	ERCIA-203	38121	63.5	244.5	169.9	201.6	77.0	36.5	134.9	79.4	31.8	92.1		4.8	8.07
2 1/4		ERPBA-204-2	ERCIA-204														
	60	ERPBA-60MM-2	ERCI-60MM														
2 7/16		ERPBA-207-2	ERCIA-207	9030 40167	2 3/4 69.9	10 3/8 263.5	6 15/16 176.2	8 11/16 220.7	3 13/32 86.5	1 5/8 41.3	5 3/4 146.1	3 5/16 84.1	1 5/16 33.3	3 15/16 100.0	5/8	1/4 6.4	23.0 10.43
2 1/2		ERPBA-208-2	ERCIA-208														
	65	ERPBA-65MM-2	ERCI-65MM														
2 11/16		ERPBA-211-2	ERCIA-211														
2 3/4		ERPBA-212-2	ERCIA-212														
	70	ERPBA-70MM-2	ERCI-70MM	9630 42836	3 1/8 79.4	11 3/4 298.5	8 1/16 204.8	9 11/16 246.1	3 31/64 88.5	1 3/4 44.5	6 9/16 166.7	3 11/16 93.7	1 7/16 36.5	4 23/32 119.9	3/4	5/16 7.9	32.0 14.51
2 15/16		ERPBA-215-2	ERCIA-215														
	75	ERPBA-75MM-2	ERCI-75MM														
3		ERPBA-300-2	ERCIA-300														
	80	ERPBA-80MM-2	ERCI-80MM														
3 3/16		ERPBA-303-2	ERCIA-303														
3 1/4		ERPBA-304-2	ERCIA-304														
	85	ERPBA-85MM-2	ERCI-85MM	15320 68147	3 3/4 95.3	13 3/4 349.3	10 1/8 257.2	11 1/4 285.8	4 33/64 114.7	2 1/16 52.4	7 15/16 201.6	4 3/16 106.4	1 57/64 48.0	5 7/16 138.1	7/8	5/16 7.9	64.0 29.03
3 7/16		ERPBA-307-2	ERCIA-307														
3 1/2		ERPBA-308-2	ERCIA-308														
	90	ERPBA-90MM-2	ERCI-90MM														
	95	ERPBA-95MM-2	ERCI-95MM														

Metric dimensions for reference only.
Not all parts are available from stock. Please contact customer service for availability (800) 626-2120.
For more information on bearing capabilities outside of our standard offering, please contact Application Engineering (800) 626-2093.

Rolling Elements: Tapered Roller
Housing: Cast Iron Four Bolt Pillow Block
Self Alignment: +/- 3 Degrees
Lock: Setscrew, Single Collar
Seal: Felt
Optional Seal: Single Lip Contact
Temperature: -20°F to 220°F

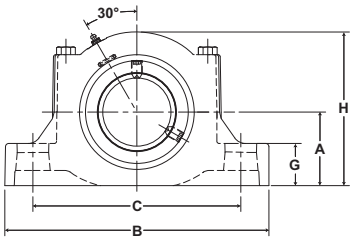

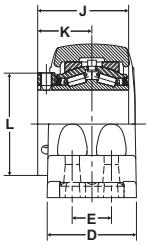

ERPBA Expansion Series Four-Bolt Base Pillow Blocks

Bore Diameter		Part No.	Bearing Insert No.	Basic Dynamic Rating lb/N	Dimensions inch / mm													Unit Wt. lb/kg
					A	B	C		D	E	G	H	J	K	L	Bolt Size	Total Expansion	
inch	mm						Min.	Max.										
3 15/16		ERPBA-315-4	ERCIA-315															
	100	ERPBA-100MM-4	ERCI-100MM	20980	4 1/4	15 1/4	11	13	5 5/32	2 1/4	2 7/16	8 7/8	5 1/4	2 1/8	5 15/16	3/4	3/8	90.0
4		ERPBA-400-4	ERCIA-400	93324	108.0	387.4	279.4	330.2	131.0	57.2	61.9	225.4	133.4	54.0	150.8		9.5	40.82
	105	ERPBA-105MM-4	ERCI-105MM															
	110	ERPBA-110MM-4	ERCI-110MM															
4 7/16		ERPBA-407-4	ERCIA-407	25750	4 3/4	16 1/2	11 3/4	13 7/8	5 3/8	2 1/2	2 3/4	9 7/8	5 1/2	3 3/8	6 13/32	3/4	3/8	110.6
4 1/2		ERPBA-408-4	ERCIA-408	114542	120.7	419.1	298.5	352.4	136.5	63.5	69.9	250.8	139.7	85.7	162.7		9.5	50.2
	115	ERPBA-115MM-4	ERCI-115MM															
	120	ERPBA-120MM-4	ERCI-120MM															
	125	ERPBA-125MM-4	ERCI-125MM	35520	5 1/2	18 1/2	13 1/2	15 7/8	6 5/64	2 3/4	3 1/8	11 5/16	6 13/64	2 37/64	7 13/32	7/8	3/8	161.0
4 15/16		ERPBA-415-4	ERCIA-415	158001	139.7	469.9	342.9	403.2	154.4	69.9	79.4	287.3	157.6	90.9	188.1		9.5	73.03
5		ERPBA-500-4	ERCIA-500															

Rolling Elements: Tapered Roller
Housing: Cast Iron Two Bolt Pillow Block
Self Alignment: +/- 3 Degrees
Lock: Setscrew, Double Collar
Seal: Felt
Optional Seal: Single Lip Contact
Temperature: -20°F to 220°F

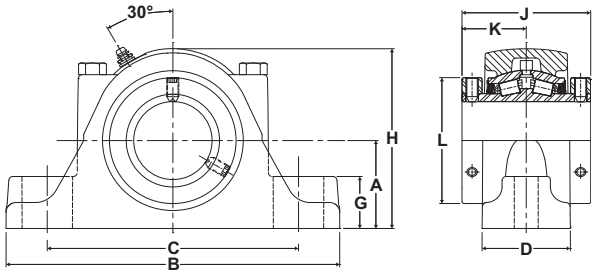

DRPB Series Two-Bolt Base Pillow Blocks

Bore Diameter inch	Bore Diameter mm	Part No.	Bearing Insert No.	Basic Dynamic Rating lb/N	Dimensions inch / mm A	B	C Min.	C Max.	D	G	H	J	K	L	Bolt Size	Unit Wt. lb/kg
1 3/4		DRPB-112-2	RCI-112													
	45	DRPB-45MM-2	RCI-45MM													
1 15/16		DRPB-115-2	RCI-115	8070 35897	2 7/8 73.0	10 254.0	6 3/4 171.5	8 1/2 215.9	2 9/16 65.1	1 1/2 38.1	5 1/4 133.4	3 1/2 88.9	1 3/4 44.5	3 1/4 82.6	5/8	17.5 7.94
	50	DRPB-50MM-2	RCI-50MM													
2		DRPB-200-2	RCI-200													
	55	DRPB-55MM-2	RCI-55MM	8570	3	11	7 3/4	9 1/4	2 9/16	1 9/16	5 5/8	3 3/4	1 7/8	3 5/8	5/8	19.7
2 3/16		DRPB-203-2	RCI-203	38121	76.2	279.4	196.9	235.0	65.1	39.7	142.9	95.3	47.6	92.1		8.94
2 1/4		DRPB-204-2	RCI-204													
	60	DRPB-60MM-2	RCI-60MM													
2 7/16		DRPB-207-2	RCI-207	9030 40167	3 1/4 82.6	12 304.8	8 1/2 215.9	10 3/8 263.5	2 7/8 73.0	1 3/4 44.5	6 1/8 155.6	4 101.6	2 50.8	3 15/16 100.0	5/8	25.5 11.57
2 1/2		DRPB-208-2	RCI-208													
	65	DRPB-65MM-2	RCI-65MM													
2 11/16		DRPB-211-2	RCI-211													
2 3/4		DRPB-212-2	RCI-212													
	70	DRPB-70MM-2	RCI-70MM	9630	3 3/4	13 1/2	9 5/16	11 9/16	3 1/8	2	7	4 1/2	2 1/4	4 23/32	3/4	35.2
2 15/16		DRPB-215-2	RCI-215	42836	95.3	342.9	236.5	293.7	79.4	50.8	177.8	114.3	57.2	119.9		15.97
	75	DRPB-75MM-2	RCI-75MM													
3		DRPB-300-2	RCI-300													
	80	DRPB-80MM-2	RCI-80MM													
3 3/16		DRPB-303-2	RCI-303													
3 1/4		DRPB-304-2	RCI-304													
	85	DRPB-85MM-2	RCI-85MM	15320	4 1/2	16	10 7/8	13 7/8	4 3/8	2 1/4	8 1/2	5	2 1/2	5 7/16	7/8	67.8
3 7/16		DRPB-307-2	RCI-307	68147	114.3	406.4	276.2	352.4	111.1	57.2	215.9	127.0	63.5	138.1		30.75
3 1/2		DRPB-308-2	RCI-308													
	90	DRPB-90MM-2	RCI-90MM													
	95	DRPB-95MM-2	RCI-95MM													

Metric dimensions for reference only.
Not all parts are available from stock. Please contact customer service for availability (800) 626-2120.
For more information on bearing capabilities outside of our standard offering, please contact Application Engineering (800) 626-2093.

Rolling Elements: Tapered Roller
Housing: Cast Iron Four Bolt Pillow Block
Self Alignment: +/- 3 Degrees
Lock: Setscrew, Double Collar
Seal: Felt
Optional Seal: Single Lip Contact
Temperature: -20°F to 220°F

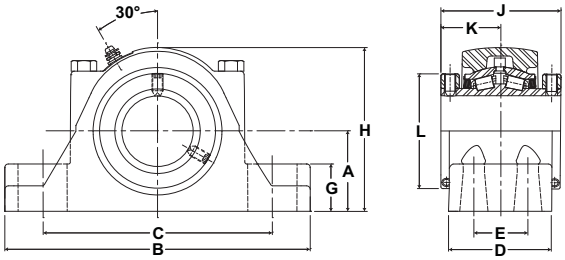

DRPB Series Four-Bolt Base Pillow Blocks

Bore Diameter		Part No.	Bearing Insert No.	Basic Dynamic Rating lb/N	Dimensions inch / mm												Unit Wt. lb/kg
					A	B	C		D	E	G	H	J	K	L	Bolt Size	
inch	mm						Min.	Max.									
3 15/16		DRPB-315-4	RCI-315														
	100	DRPB-100MM-4	RCI-100MM	20980	5	17 1/2	12	15	4 43/64	2	2 3/4	9 3/8	6 1/4	3 1/8	5 15/16	3/4	93.0
4		DRPB-400-4	RCI-400	93324	127.0	444.5	304.8	381.0	118.7	50.8	69.9	238.1	158.8	79.4	150.8		42.18
	105	DRPB-105MM-4	RCI-105MM														

Rolling Elements: Tapered Roller
Housing: Cast Iron Two Bolt Pillow Block
Self Alignment: +/- 3 Degrees
Lock: Setscrew, Single Collar
Seal: Felt
Optional Seal: Single Lip Contact
Temperature: -20°F to 220°F

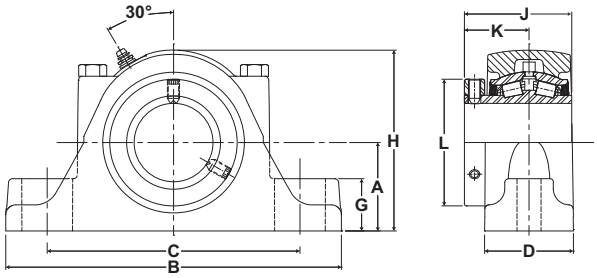

DRPBA Series Two-Bolt Base Pillow Blocks - Single Lock Collar

Bore Diameter inch	Bore Diameter mm	Part No.	Bearing Insert No.	Basic Dynamic Rating lb/N	Dimensions inch / mm A	B	C Min.	C Max.	D	G	H	J	K	L	Bolt Size	Unit Wt. lb/kg
1 3/4		DRPBA-112-2	RCIA-112													
	45	DRPBA-45MM-2	RCI-45MM													
1 15/16		DRPBA-115-2	RCIA-115	8070 35897	2 7/8 73.0	10 254.0	6 3/4 171.5	8 1/2 215.9	2 9/16 65.1	1 1/2 38.1	5 1/4 133.4	2 61/64 75.0	1 3/4 44.5	3 1/4 82.6	5/8	17.5 7.94
	50	DRPBA-50MM-2	RCI-50MM													
2		DRPBA-200-2	RCIA-200													
	55	DRPBA-55MM-2	RCI-55MM	8570	3 76.2	11 279.4	7 3/4 196.9	9 1/4 235.0	2 9/16 65.1	1 9/16 39.7	5 5/8 142.9	3 1/8 79.4	1 7/8 47.6	3 5/8 92.1	5/8	19.7 8.94
2 3/16		DRPBA-203-2	RCIA-203	38121												
2 1/4		DRPBA-204-2	RCIA-204													
	60	DRPBA-60MM-2	RCI-60MM													
2 7/16		DRPBA-207-2	RCIA-207	9030 40167	3 1/4 82.6	12 304.8	8 1/2 215.9	10 3/8 263.5	2 7/8 73.0	1 3/4 44.5	6 1/8 155.6	3 5/16 84.1	2 50.8	3 15/16 100.0	5/8	25.5 11.57
2 1/2		DRPBA-208-2	RCIA-208													
	65	DRPBA-65MM-2	RCI-65MM													
2 11/16		DRPBA-211-2	RCIA-211													
2 3/4		DRPBA-212-2	RCIA-212													
	70	DRPBA-70MM-2	RCI-70MM	9630 42836	3 3/4 95.3	13 1/2 342.9	9 5/16 236.5	11 9/16 293.7	3 1/8 79.4	2 50.8	7 177.8	3 11/16 93.7	2 1/4 57.2	4 23/32 119.9	3/4	35.2 15.97
2 15/16		DRPBA-215-2	RCIA-215													
	75	DRPBA-75MM-2	RCI-75MM													
3		DRPBA-300-2	RCIA-300													
	80	DRPBA-80MM-2	RCI-80MM													
3 3/16		DRPBA-303-2	RCIA-303													
3 1/4		DRPBA-304-2	RCIA-304													
	85	DRPBA-85MM-2	RCI-85MM	15320 68147	4 1/2 114.3	16 406.4	10 7/8 276.2	13 7/8 352.4	4 3/8 111.1	2 1/4 57.2	8 1/2 215.9	4 3/16 106.4	2 1/2 63.5	5 7/16 138.1	7/8	67.8 30.75
3 7/16		DRPBA-307-2	RCIA-307													
3 1/2		DRPBA-308-2	RCIA-308													
	90	DRPBA-90MM-2	RCI-90MM													
	95	DRPBA-95MM-2	RCI-95MM													

Metric dimensions for reference only.
Not all parts are available from stock. Please contact customer service for availability (800) 626-2120.
For more information on bearing capabilities outside of our standard offering, please contact Application Engineering (800) 626-2093.

Rolling Elements: Tapered Roller
Housing: Cast Iron Four Bolt Pillow Block
Self Alignment: +/- 3 Degrees
Lock: Setscrew, Single Collar
Seal: Felt
Optional Seal: Single Lip Contact
Temperature: -20°F to 220°F

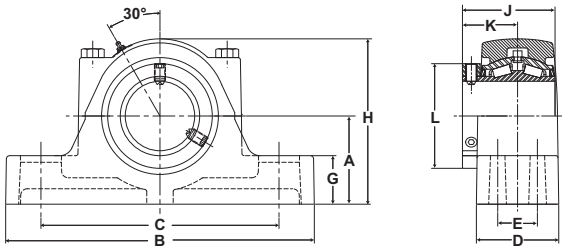

DRPBA Series Four-Bolt Base Pillow Blocks - Single Lock Collar

Bore Diameter		Part No.	Bearing Insert No.	Basic Dynamic Rating lb/N	Dimensions inch / mm												Unit Wt. lb/kg
					A	B	C		D	E	G	H	J	K	L	Bolt Size	
inch	mm						Min.	Max.									
3 15/16		DRPBA-315-4	RCIA-315														
	100	DRPBA-100MM-4	RCI-100MM	20980	5	17 1/2	12	15	4 43/64	2	2 3/4	9 3/8	5 1/4	3 1/8	5 15/16	3/4	93.0
4		DRPBA-400-4	RCIA-400	93324	127.0	444.5	304.8	381.0	118.7	50.8	69.9	238.1	133.4	79.4	150.8		42.2
	105	DRPBA-105MM-4	RCI-105MM														

Rolling Elements: Tapered Roller
Housing: Cast Iron Two Bolt Pillow Block
Self Alignment: +/- 3 Degrees
Lock: Setscrew, Single Collar
Seal: Felt
Optional Seal: Single Lip Contact
Temperature: -20°F to 220°F

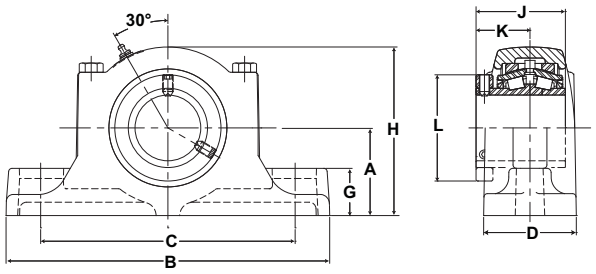

EDPBA Expansion Series Two-Bolt Base Pillow Blocks - Single Lock Collar

Bore Diameter inch	Bore Diameter mm	Part No.	Bearing Insert No.	Basic Dynamic Rating lb/N	Dimensions inch / mm A	B	C Min.	C Max.	D	G	H	J	K	L	Bolt Size	Total Expansion	Unit Wt. lb/kg
1 3/4		EDPBA-112-2	ERCIA-112														
	45	EDPBA-45MM-2	ERCI-45MM														
1 15/16		EDPBA-115-2	ERCIA-115	8070 35897	2 7/8 73.0	10 254.0	6 3/4 171.5	8 1/2 215.9	2 29/32 73.8	1 1/2 38.1	5 1/2 139.7	2 61/64 75.0	1 3/4 44.5	3 1/4 82.6	5/8	3/16 4.8	19.2 8.72
	50	EDPBA-50MM-2	ERCI-50MM														
2		EDPBA-200-2	ERCIA-200														
	55	EDPBA-55MM-2	ERCI-55MM	8570 38121	3 76.2	11 279.4	7 3/4 196.9	9 1/4 235.0	3 1/32 77.0	1 9/16 39.7	5 13/16 147.6	3 1/8 79.4	1 7/8 47.6	3 5/8 92.1	5/8	3/16 4.8	21.8 9.89
2 3/16		EDPBA-203-2	ERCIA-203														
2 1/4		EDPBA-204-2	ERCIA-204														
	60	EDPBA-60MM-2	ERCI-60MM														
2 7/16		EDPBA-207-2	ERCIA-207	9030 40167	3 1/4 82.6	12 304.8	8 1/2 215.9	10 3/8 263.5	3 7/16 87.3	1 3/4 44.5	6 1/4 158.8	3 5/16 84.1	2 50.8	3 15/16 100.0	5/8	1/4 6.4	27.8 12.61
2 1/2		EDPBA-208-2	ERCIA-208														
	65	EDPBA-65MM-2	ERCI-65MM														
2 11/16		EDPBA-211-2	ERCIA-211														
2 3/4		EDPBA-212-2	ERCIA-212														
	70	EDPBA-70MM-2	ERCI-70MM	9630 42836	3 3/4 95.3	13 1/2 342.9	9 5/16 236.5	11 9/16 293.7	3 1/2 88.9	2 50.8	7 3/16 182.6	3 11/16 93.7	2 1/4 57.2	4 23/32 119.9	3/4	5/16 7.9	38.0 17.24
2 15/16		EDPBA-215-2	ERCIA-215														
	75	EDPBA-75MM-2	ERCI-75MM														
3		EDPBA-300-2	ERCIA-300														
	80	EDPBA-80MM-2	ERCI-80MM														
3 3/16		EDPBA-303-2	ERCIA-303														
3 1/4		EDPBA-304-2	ERCIA-304														
	85	EDPBA-85MM-2	ERCI-85MM	15320 68147	4 1/2 114.3	16 406.4	10 7/8 276.2	13 7/8 352.4	4 1/2 114.3	2 1/4 57.2	8 11/16 220.7	4 3/16 106.4	2 1/2 63.5	5 7/16 138.1	7/8	5/16 7.9	75.8 34.38
3 7/16		EDPBA-307-2	ERCIA-307														
3 1/2		EDPBA-308-2	ERCIA-308														
	90	EDPBA-90MM-2	ERCI-90MM														
	95	EDPBA-95MM-2	ERCI-95MM														

Metric dimensions for reference only.
Not all parts are available from stock. Please contact customer service for availability (800) 626-2120.
For more information on bearing capabilities outside of our standard offering, please contact Application Engineering (800) 626-2093.

Rolling Elements: Tapered Roller
Housing: Cast Iron Four Bolt Pillow Block
Self Alignment: +/- 3 Degrees
Lock: Setscrew, Single Collar
Seal: Felt
Optional Seal: Single Lip Contact
Temperature: -20°F to 220°F

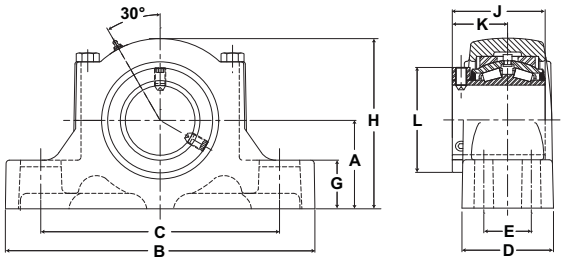

EDPBA Expansion Series Four-Bolt Base Pillow Blocks - Single Lock Collar

Bore Diameter		Part No.	Bearing Insert No.	Basic Dynamic Rating lb/N	Dimensions inch / mm													Unit Wt. lb/kg
					A	B	C		D	E	G	H	J	K	L	Bolt Size	Total Expansion	
inch	mm						Min.	Max.										
3 15/16		EDPBA-315-4	ERCIA-315															
	100	EDPBA-100MM-4	ERCI-100MM	20980	5	17 1/2	12	15	5 3/16	2	2 3/4	9 5/8	5 1/4	3 3/25	5 15/16	3/4	3/8	106.0
4		EDPBA-400-4	ERCIA-400	93321	127.0	444.5	304.8	381.0	131.8	50.8	69.9	244.5	133.4	79.2	150.8		9.84	48.08
	105	EDPBA-105MM-4	ERCI-105MM															

Rolling Elements: Tapered Roller
Housing: Cast Iron Four Bolt Pillow Block
Self Alignment: +/- 3 Degrees
Lock: Setscrew, Double Collar
Seal: Felt
Optional Seal: Single Lip Contact
Temperature: -20°F to 220°F

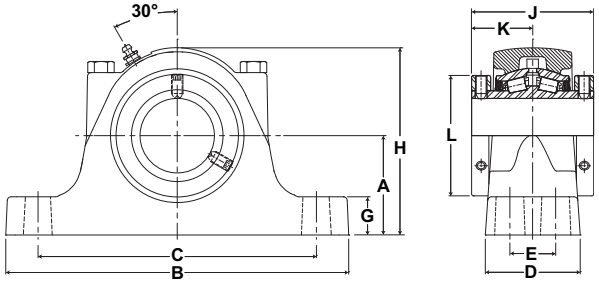

RPBXT Series Four-Bolt Base Pillow Blocks - SAF Mounting Dimensions

Bore Diameter		Part No.	Bearing Insert No.	Basic Dynamic Rating lb/N	Dimensions inch / mm												Unit Wt. lb/kg
					A	B	C		D	E	G	H	J	K	L	Bolt Size	
inch	mm						Min.	Max.									
2 1/4		RPBXT-204-4	RCI-204														
	60	RPBXT-60MM-4	RCI-60MM														
2 7/16		RPBXT-207-4	RCI-207	9030 40167	3 1/4 82.6	11 1/4 285.8	8 5/8 219.1	9 5/8 244.5	3 1/8 79.4	1 7/8 47.6	1 1/4 31.8	6 1/8 155.6	4 101.6	2 50.8	3 15/16 100.0	1/2	25.5 11.57
2 1/2		RPBXT-208-4	RCI-208														
	65	RPBXT-65MM-4	RCI-65MM														
2 11/16		RPBXT-211-4	RCI-211														
2 3/4		RPBXT-212-4	RCI-212														
	70	RPBXT-70MM-4	RCI-70MM	9630 42836	3 3/4 95.3	13 330.2	10 254.0	11 279.4	3 1/2 88.9	2 1/8 54.0	1 1/2 38.1	7 177.8	4 1/2 114.3	2 1/4 57.2	4 23/32 119.9	5/8	36.2 16.42
2 15/16		RPBXT-215-4	RCI-215														
	75	RPBXT-75MM-4	RCI-75MM														
3		RPBXT-300-4	RCI-300														
	80	RPBXT-80MM-4	RCI-80MM														
3 3/16		RPBXT-303-4	RCI-303														
3 1/4		RPBXT-304-4	RCI-304														
	85	RPBXT-85MM-4	RCI-85MM	15320 68147	4 1/2 114.3	15 1/4 387.4	11 3/4 298.5	12 3/4 323.9	4 3/8 111.1	2 3/8 60.3	1 3/4 44.5	8 1/2 215.9	5 127.0	2 1/2 63.5	5 7/16 138.1	3/4	67.8 30.75
3 7/16		RPBXT-307-4	RCI-307														
3 1/2		RPBXT-308-4	RCI-308														
	90	RPBXT-90MM-4	RCI-90MM														
	95	RPBXT-95MM-4	RCI-95MM														
3 15/16		RPBXT-315-4	RCI-315														
	100	RPBXT-100MM-4	RCI-100MM	20980 93324	4 15/16 125.4	16 1/2 419.1	12 7/8 327.0	14 1/8 358.8	4 3/4 120.7	2 3/4 69.9	2 50.8	9 5/16 236.5	6 1/4 158.8	3 1/8 79.4	5 15/16 150.8	3/4	93 42.18
4		RPBXT-400-4	RCI-400														
	105	RPBXT-105MM-4	RCI-105MM														
	110	RPBXT-110MM-4	RCI-110MM														
4 7/16		RPBXT-407-4	RCI-407	25750 114542	6 152.4	18 3/8 466.7	14 1/2 368.3	16 406.4	5 1/4 133.4	3 1/4 82.6	2 1/2 63.5	10 7/8 276.2	6 3/4 171.5	3 3/8 85.7	6 13/32 162.7	7/8	114.7 52.03
4 1/2		RPBXT-408-4	RCI-408														
	115	RPBXT-115MM-4	RCI-115MM														
	120	RPBXT-120MM-4	RCI-120MM														
	125	RPBXT-125MM-4	RCI-125MM	35520 158001	6 152.4	20 1/8 511.2	15 5/8 396.9	17 3/8 441.3	6 152.4	3 3/8 85.7	2 1/2 63.5	11 1/2 292.1	7 1/4 184.2	3 5/8 92.1	7 13/32 188.1	1	172.4 78.20
4 15/16		RPBXT-415-4	RCI-415														
5		RPBXT-500-4	RCI-500														

Metric dimensions for reference only.
Not all parts are available from stock. Please contact customer service for availability (800) 626-2120.
For more information on bearing capabilities outside of our standard offering, please contact Application Engineering (800) 626-2093.

Rolling Elements: Tapered Roller
Housing: Cast Iron Four Bolt Pillow Block
Self Alignment: +/- 3 Degrees
Lock: Setscrew, Double Collar
Seal: Felt
Optional Seal: Single Lip Contact
Temperature: -20°F to 220°F

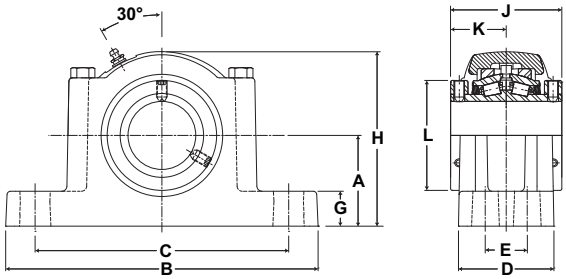

ERPBXT Expansion Series Four-Bolt Base Pillow Blocks - SAF Mounting Dimensions

Bore Diameter		Part No.	Bearing Insert No.	Basic Dynamic Rating lb/N	Dimensions inch / mm													Unit Wt. lb/kg
					A	B	C		D	E	G	H	J	K	L	Bolt Size	Total Expansion	
inch	mm						Min.	Max.										
2 1/4		ERPBXT-204-4	ERCI-204															
	60	ERPBXT-60MM-4	ERCI-60MM															
2 7/16		ERPBXT-207-4	ERCI-207	9030 40167	3 1/4 82.6	11 1/4 285.8	8 5/8 219.1	9 5/8 244.5	3 27/64 86.9	1 7/8 47.6	1 1/4 31.8	6 1/4 158.8	4 101.6	2 50.8	3 15/16 100.0	1/2	1/4 6.35	27.7 12.56
2 1/2		ERPBXT-208-4	ERCI-208															
	65	ERPBXT-65MM-4	ERCI-65MM															
2 11/16		ERPBXT-211-4	ERCI-211															
2 3/4		ERPBXT-212-4	ERCI-212															
	70	ERPBXT-70MM-4	ERCI-70MM	9630 42836	3 3/4 95.3	13 330.2	10 254.0	11 279.4	3 1/2 88.9	2 1/8 54.0	1 1/2 38.1	7 3/16 182.6	4 1/2 114.3	2 1/4 57.2	4 23/32 119.9	5/8	5/16 7.94	39.0 17.69
2 15/16		ERPBXT-215-4	ERCI-215															
	75	ERPBXT-75MM-4	ERCI-75MM															
3		ERPBXT-300-4	ERCI-300															
	80	ERPBXT-80MM-4	ERCI-80MM															
3 3/16		EPRBXT-303-4	ERCI-303															
3 1/4		ERPBXT-304-4	ERCI-304															
	85	ERPBXT-85MM-4	ERCI-85MM	15320 68147	4 1/2 114.3	15 1/4 387.4	11 3/4 298.5	12 3/4 323.9	4 1/2 114.3	2 3/8 60.3	1 3/4 44.5	8 11/16 220.7	5 127.0	2 1/2 63.5	5 7/16 138.1	3/4	5/16 7.94	75.3 34.16
3 7/16		ERPBXT-307-4	ERCI-307															
3 1/2		ERPBXT-308-4	ERCI-308															
	90	ERPBXT-90MM-4	ERCI-90MM															
	95	ERPBXT-95MM-4	ERCI-95MM															
3 15/16		ERPBXT-315-4	ERCI-315															
	100	ERPBXT-100MM-4	ERCI-100MM	20980 93324	4 15/16 125.4	16 1/2 419.1	12 7/8 327.0	14 1/8 358.8	5 3/16 131.8	2 3/4 69.9	2 50.8	9 9/16 242.9	6 1/4 158.8	3 1/8 79.4	5 15/16 150.8	3/4	3/8 9.84	106.0 48.08
4		ERPBXT-400-4	ERCI-400															
	105	ERPBXT-105MM-4	ERCI-105MM															
	110	ERPBXT-110MM-4	ERCI-110MM															
4 7/16		ERPBXT-407-4	ERCI-407	25750 114542	6 152.4	18 3/8 466.7	14 1/2 368.3	16 406.4	5 13/32 137.3	3 1/4 82.6	2 1/2 63.5	11 1/8 282.6	6 3/4 171.5	3 3/8 85.7	6 13/32 162.7	7/8	3/8 9.84	104.0 47.17
4 1/2		ERPBXT-408-4	ERCI-408															
	115	ERPBXT-115MM-4	ERCI-115MM															
	120	ERPBXT-120MM-4	ERCI-120MM															
	125	ERPBXT-125MM-4	ERCI-125MM	35520 158001	6 152.4	20 1/8 511.2	15 5/8 396.9	17 3/8 441.3	6 3/32 154.8	3 3/8 85.7	2 1/2 63.5	11 13/16 300.0	7 1/4 184.2	3 5/8 92.1	7 13/32 188.1	1	3/8 9.84	190.0 86.18
4 15/16		ERPBXT-415-4	ERCI-415															
5		ERPBXT-500-4	ERCI-500															

Rolling Elements: Tapered Roller
Housing: Cast Steel Two Bolt Pillow Block
Self Alignment: +/- 3 Degrees
Lock: Setscrew, Double Collar
Seal: Felt
Optional Seal: Single Lip Contact
Temperature: -20°F to 220°F

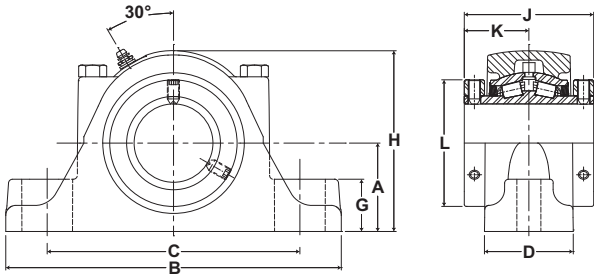

SPB Series Two-Bolt Base Pillow Blocks - Cast Steel Housing

Bore Diameter inch	Bore Diameter mm	Part No.	Bearing Insert No.	Basic Dynamic Rating lb/N	A	B	C Min.	C Max.	D	G	H	J	K	L	Bolt Size	Unit Wt. lb/kg
					Dimensions inch / mm											
1 1/2		SPB-108-2	RCI-108													
	40	SPB-40MM-2	RCI-40MM	6140	2 1/8	7 3/4	5 9/16	6 7/16	2 5/16	1 1/4	4 3/8	3 3/8	1 11/16	2 7/8	1/2	12.0
1 5/8		SPB-110-2	RCI-110	27312	54.0	196.9	141.3	163.5	58.7	31.8	111.1	85.7	42.9	73.0		5.44
1 11/16		SPB-111-2	RCI-111													
1 3/4		SPB-112-2	RCI-112													
	45	SPB-45MM-2	RCI-45MM													
1 15/16		SPB-115-2	RCI-115	8070	2 1/4	8 7/8	6 5/16	7 3/16	2 7/16	1 1/4	4 5/8	3 1/2	1 3/4	3 1/4	5/8	14.5
	50	SPB-50MM-2	RCI-50MM	35897	57.2	225.4	160.3	182.6	61.9	31.8	117.5	88.9	44.5	82.6		6.58
2		SPB-200-2	RCI-200													
	55	SPB-55MM-2	RCI-55MM	8570	2 1/2	9 5/8	6 11/16	7 15/16	2 9/16	1 7/16	5 1/8	3 3/4	1 7/8	3 5/8	5/8	17.3
2 3/16		SPB-203-2	RCI-203	38121	63.5	244.5	169.9	201.6	65.1	36.5	130.2	95.3	47.6	92.1		7.85
2 1/4		SPB-204-2	RCI-204													
	60	SPB-60MM-2	RCI-60MM													
2 7/16		SPB-207-2	RCI-207	9030	2 3/4	10 3/8	6 15/16	8 11/16	2 3/4	1 5/8	5 5/8	4	2	3 15/16	5/8	22.8
2 1/2		SPB-208-2	RCI-208	40167	69.9	263.5	176.2	220.7	69.9	41.3	142.9	101.6	50.8	100.0		10.34
	65	SPB-65MM-2	RCI-65MM													
2 11/16		SPB-211-2	RCI-211													
2 3/4		SPB-212-2	RCI-212													
	70	SPB-70MM-2	RCI-70MM	9630	3 1/8	11 3/4	8 1/16	9 11/16	3	1 3/4	6 3/8	4 1/2	2 1/4	4 23/32	3/4	32.2
2 15/16		SPB-215-2	RCI-215	42836	79.4	298.5	204.8	246.1	76.2	44.5	161.9	114.3	57.2	119.9		14.61
	75	SPB-75MM-2	RCI-75MM													
3		SPB-300-2	RCI-300													
	80	SPB-80MM-2	RCI-80MM													
3 3/16		SPB-303-2	RCI-303													
3 1/4		SPB-304-2	RCI-304													
	85	SPB-85MM-2	RCI-85MM	15320	3 3/4	13 3/4	10 1/8	11 1/4	4 1/8	2 1/16	7 3/4	5	2 1/2	5 7/16	7/8	65.6
3 7/16		SPB-307-2	RCI-307	68147	95.3	349.3	257.2	285.8	104.8	52.4	196.9	127.0	63.5	138.1		29.76
3 1/2		SPB-308-2	RCI-308													
	90	SPB-90MM-2	RCI-90MM													
	95	SPB-95MM-2	RCI-95MM													

Metric dimensions for reference only.
Not all parts are available from stock. Please contact customer service for availability (800) 626-2120.
For more information on bearing capabilities outside of our standard offering, please contact Application Engineering (800) 626-2093.

Rolling Elements: Tapered Roller
Housing: Cast Steel Four Bolt Pillow Block
Self Alignment: +/- 3 Degrees
Lock: Setscrew, Double Collar
Seal: Felt
Optional Seal: Single Lip Contact
Temperature: -20°F to 220°F

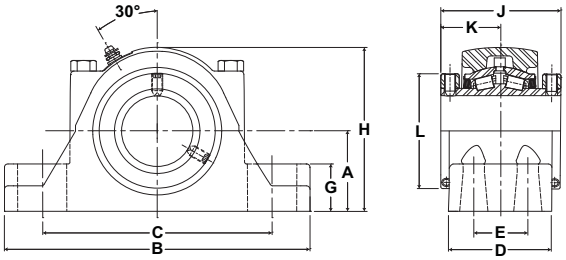

SPB Series Four-Bolt Base Pillow Blocks - Cast Steel Housing

Bore Diameter		Part No.	Bearing Insert No.	Basic Dynamic Rating lb/N	Dimensions inch / mm											Unit Wt. lb/kg
					A	B	C		D	E	G	H	J	K	L	Bolt Size	
inch	mm						Min.	Max.									
3 15/16		SPB-315-4	RCI-315														
	100	SPB-100MM-4	RCI-100MM	20980	4 1/4	15 1/4	11	13	4 1/2	2 1/4	2 7/16	8 5/8	6 1/4	3 1/8	5 15/16	3/4	84.6
4		SPB-400-4	RCI-400	93324	108.0	387.4	279.4	330.2	114.3	57.2	61.9	219.1	158.8	79.4	150.8		38.37
	105	SPB-105MM-4	RCI-105MM														
	110	SPB-110MM-4	RCI-110MM														
4 7/16		SPB-407-4	RCI-407	25750	4 3/4	16 1/2	11 3/4	13 7/8	4 5/8	2 1/4	2 3/4	9 5/8	6 3/4	3 3/8	6 13/32	3/4	105.2
4 1/2		SPB-408-4	RCI-408	114542	120.7	419.1	298.5	352.4	117.5	57.2	69.9	244.5	171.5	85.7	162.7		47.7
	115	SPB-115MM-4	RCI-115MM														
	120	SPB-120MM-4	RCI-120MM														
	125	SPB-125MM-4	RCI-125MM	35520	5 1/2	18 1/2	13 1/2	15 7/8	5 1/8	2 3/4	3 1/8	11	7 1/4	3 5/8	7 13/32	7/8	158.0
4 15/16		SPB-415-4	RCI-415	158001	139.7	469.9	342.9	403.2	130.2	69.9	79.4	279.4	184.2	92.1	188.1		71.67
5		SPB-500-4	RCI-500														

Rolling Elements: Tapered Roller
Housing: Cast Iron Four Bolt Flange
Self Alignment: +/- 3 Degrees
Lock: Setscrew, Double Collar
Seal: Felt
Optional Seal: Single Lip Contact
Temperature: -20°F to 220°F

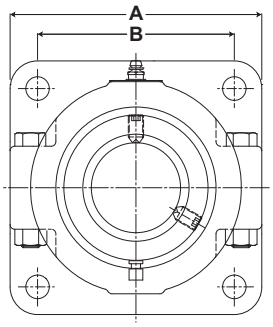

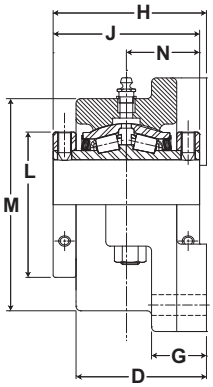

RFB Series Four-Bolt Flange Units

Bore Diameter inch	Bore Diameter mm	Part No.	Bearing Insert No.	Basic Dynamic Rating lb/N	Dimensions inch / mm A	B	B.C.	D	G	H	J	L	M	N	Bolt Size	Unit Wt. lb/kg
1 3/16		RFB-103	RCI-103	2975	4	2 7/8	4 1/16	2 5/16	1	2 13/16	2 25/32	2 1/4	3 1/4	1 25/64	3/8	6.0
1 1/4		RFB-104	RCI-104	13233	101.6	73.0	103.2	58.7	25.4	71.4	70.6	57.2	82.6	35.3		2.72
1 3/8		RFB-106	RCI-106	4760	4 5/8	3 1/2	4 61/64	2 9/16	1	3 1/16	3	2 5/8	3 3/4	1 1/2	1/2	8.1
	35	RFB-35MM	RCI-35MM	21174	117.5	88.9	125.8	65.1	25.4	77.8	76.2	66.7	95.3	38.1		3.67
1 7/16		RFB-107	RCI-107													
1 1/2		RFB-108	RCI-108	6140	5 3/8	4 1/8	5 53/64	2 15/16	1 3/16	3 1/2	3 3/8	2 7/8	4 1/2	1 11/16	1/2	12.3
	40	RFB-40MM	RCI-40MM	27312	136.5	104.8	148.0	74.6	30.2	88.9	85.7	73.0	114.3	42.9		5.58
1 5/8		RFB-110	RCI-110													
1 11/16		RFB-111	RCI-111													
1 3/4		RFB-112	RCI-112	8070	5 5/8	4 3/8	6 3/16	3 1/16	1 3/16	3 5/8	3 1/2	3 1/4	4 3/4	1 3/4	1/2	14.5
	45	RFB-45MM	RCI-45MM	35897	142.9	111.1	157.2	77.8	30.2	92.1	88.9	82.6	120.7	44.5		6.58
1 15/16		RFB-115	RCI-115													
	50	RFB-50MM	RCI-50MM													
2		RFB-200	RCI-200													
	55	RFB-55MM	RCI-55MM	8570	6 1/4	4 7/8	6 57/64	3 1/4	1 3/8	3 7/8	3 3/4	3 5/8	5 1/4	1 7/8	5/8	19.0
2 3/16		RFB-203	RCI-203	38121	158.8	123.8	175.0	82.6	34.9	98.4	95.3	92.1	133.4	47.6		8.62
2 1/4		RFB-204	RCI-204	9030	6 7/8	5 3/8	7 39/64	3 9/16	1 1/2	4 3/16	4	3 15/16	5 3/4	2	5/8	24.0
	60	RFB-60MM	RCI-60MM	40167	174.6	136.5	193.3	90.5	38.1	106.4	101.6	100.0	146.1	50.8		10.89
2 7/16		RFB-207	RCI-207													
2 1/2		RFB-208	RCI-208													
	65	RFB-65MM	RCI-65MM													
2 11/16		RFB-211	RCI-211	9630	7 3/4	6	8 31/64	3 15/16	1 5/8	4 11/16	4 1/2	4 23/32	6 1/2	2 1/4	3/4	33.4
2 3/4		RFB-212	RCI-212	42836	196.9	152.4	215.5	100.0	41.3	119.1	114.3	119.9	165.1	57.2		15.15
	70	RFB-70MM	RCI-70MM													
2 15/16		RFB-215	RCI-215													
	75	RFB-75MM	RCI-75MM													
3		RFB-300	RCI-300													
	80	RFB-80MM	RCI-80MM	15320	9 1/4	7	9 29/32	4 1/2	1 7/8	5 1/4	5	5 7/16	8	2 1/2	3/4	57.4
3 3/16		RFB-303	RCI-303	68147	235.0	177.8	251.6	114.3	47.6	133.4	127.0	138.1	203.2	63.5		26.04
3 1/4		RFB-304	RCI-304													
	85	RFB-85MM	RCI-85MM													
3 7/16		RFB-307	RCI-307													
3 1/2		RFB-308	RCI-308													
	90	RFB-90MM	RCI-90MM													
	95	RFB-95MM	RCI-95MM													
3 15/16		RFB-315	RCI-315	20980	10 1/4	7 3/4	10 61/64	5 5/8	2 1/8	6 1/2	6 1/4	5 15/16	8 7/8	3 1/8	7/8	81.8
	100	RFB-100MM	RCI-100MM	93324	260.4	196.9	278.2	142.9	54.0	165.1	158.8	150.8	225.4	79.4		37.10
4		RFB-400	RCI-400													
	105	RFB-105MM	RCI-105MM													

Metric dimensions for reference only.
Not all parts are available from stock. Please contact customer service for availability (800) 626-2120.
For more information on bearing capabilities outside of our standard offering, please contact Application Engineering (800) 626-2093.

Rolling Elements: Tapered Roller
Housing: Cast Iron Four Bolt Flange
Self Alignment: +/- 3 Degrees
Lock: Setscrew, Single Collar
Seal: Felt
Optional Seal: Single Lip Contact
Temperature: -20°F to 220°F

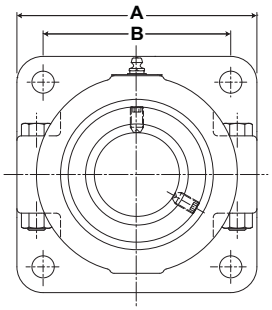

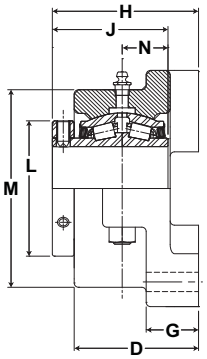

RFBA Series Four-Bolt Flange Units - Single Lock Collar

Bore Diameter inch	Bore Diameter mm	Part No.	Bearing Insert No.	Basic Dynamic Rating lb/N	Dimensions inch / mm A	B	B.C.	D	G	H	J	L	M	N	Bolt Size	Unit Wt. lb/kg
1 3/16		RFBA-103	RCIA-103	2975	4	2 7/8	4 1/16	2 5/16	1	2 13/16	2 1/4	2 1/4	3 1/4	55/64	3/8	6.0
1 1/4		RFBA-104	RCIA-104	13233	101.6	73.0	103.2	58.7	25.4	71.4	57.2	57.2	82.6	21.8		2.72
1 3/8		RFBA-106	RCIA-106	4760	4 5/8	3 1/2	4 61/64	2 9/16	1	3 1/16	2 17/32	2 5/8	3 3/4	1 1/32	1/2	8.1
1 7/16		RFBA-107	RCIA-107	21174	117.5	88.9	125.8	65.1	25.4	77.8	64.3	66.7	95.3	26.2		3.67
1 1/2		RFBA-108	RCIA-108	6140	5 3/8	4 1/8	5 53/64	2 15/16	1 3/16	3 1/2	2 27/32	2 7/8	4 1/2	1 5/32	1/2	12.3
1 5/8		RFBA-110	RCIA-110	27312	136.5	104.8	148.0	74.6	30.2	88.9	72.2	73.0	114.3	29.4		5.58
1 11/16		RFBA-111	RCIA-111													
1 3/4		RFBA-112	RCIA-112													
	45	RFBA-45MM	RCI-45MM	8070	5 5/8	4 3/8	6 3/16	3 1/16	1 3/16	3 5/8	2 61/64	3 1/4	4 3/4	1 13/64	1/2	14.5
1 15/16		RFBA-115	RCIA-115	35897	142.9	111.1	157.2	77.8	30.2	92.1	75.0	82.6	120.7	30.6		6.58
	50	RFBA-50MM	RCI-50MM													
2		RFBA-200	RCIA-200													
	55	RFBA-55MM	RCI-55MM	8570	6 1/4	4 7/8	6 57/64	3 1/4	1 3/8	3 7/8	3 1/8	3 5/8	5 1/4	1 1/4	5/8	19.0
2 3/16		RFBA-203	RCIA-203	38121	158.8	123.8	175.0	82.6	34.9	98.4	79.4	92.1	133.4	31.8		8.62
2 1/4		RFBA-204	RCIA-204													
	60	RFBA-60MM	RCI-60MM	9030	6 7/8	5 3/8	7 39/64	3 9/16	1 1/2	4 3/16	3 5/16	3 15/16	5 3/4	1 5/16	5/8	24.0
2 7/16		RFBA-207	RCIA-207	40167	174.6	136.5	193.3	90.5	38.1	106.4	84.1	100.0	146.1	33.3		10.89
2 1/2		RFBA-208	RCIA-208													
	65	RFBA-65MM	RCI-65MM													
2 11/16		RFBA-211	RCIA-211													
2 3/4		RFBA-212	RCIA-212													
	70	RFBA-70MM	RCI-70MM	9630	7 3/4	6	8 31/64	3 15/16	1 5/8	4 11/16	3 11/16	4 23/32	6 1/2	1 7/16	3/4	33.4
2 15/16		RFBA-215	RCIA-215	42836	196.9	152.4	215.5	100.0	41.3	119.1	93.7	119.9	165.1	36.5		15.15
	75	RFBA-75MM	RCI-75MM													
3		RFBA-300	RCIA-300													
	80	RFBA-80MM	RCI-80MM													
3 3/16		RFBA-303	RCIA-303													
3 1/4		RFBA-304	RCIA-304													
	85	RFBA-85MM	RCI-85MM	15320	9 1/4	7	9 29/32	4 1/2	1 7/8	5 1/4	4 3/16	5 7/16	8	1 11/16	3/4	57.4
3 7/16		RFBA-307	RCIA-307	68147	235.0	177.8	251.6	114.3	47.6	133.4	106.4	138.1	203.2	42.9		26.04
3 1/2		RFBA-308	RCIA-308													
	90	RFBA-90MM	RCI-90MM													
	95	RFBA-95MM	RCI-95MM													
3 15/16		RFBA-315	RCIA-315													
	100	RFBA-100MM	RCI-100MM	20980	10 1/4	7 3/4	10 61/64	5 5/8	2 1/8	6 1/2	5 1/4	5 15/16	8 7/8	2 1/8	7/8	81.8
4		RFBA-400	RCIA-400	93324	260.4	196.9	278.2	142.9	54.0	165.1	133.4	150.8	225.4	54.0		37.10
	105	RFBA-105MM	RCI-105MM													

Rolling Elements: Tapered Roller
Housing: Cast Iron Piloted Flange
Self Alignment: +/- 3 Degrees
Lock: Setscrew, Double Collar
Seal: Felt
Optional Seal: Single Lip Contact
Temperature: -20°F to 220°F

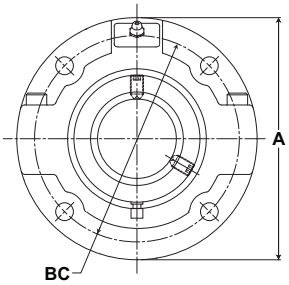

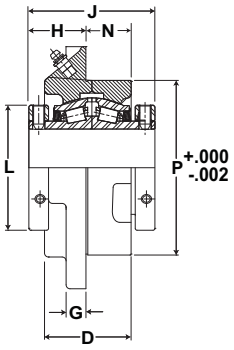

RFP Series Piloted Flange Cartridge Units

Bore Diameter inch	Bore Diameter mm	Part No.	Bearing Insert No.	Basic Dynamic Rating lb/N	Dimensions inch / mm A	B.C.	D	G	H	J	L	N	P	Bolt Size	Unit Wt. lb/kg
1 3/16 1 1/4		RFP-103 RFP-104	RCI-103 RCI-104	2975 13233	5 127.0	4 1/8 104.8	1 3/4 44.5	7/16 11.1	1 5/16 33.3	2 3/4 69.9	2 1/4 57.2	7/8	3 3/8 85.7	3/8	5.5 2.49
1 3/8 1 7/16	35	RFP-106 RFP-35MM RFP-107	RCI-106 RCI-35MM RCI-107	4760 21174	5 1/4 133.4	4 3/8 111.1	2 50.8	1/2 12.7	1 1/2 38.1	3 76.2	2 5/8 66.7	15/16	3 5/8 92.1	3/8	6.8 3.08
1 1/2 1 5/8 1 11/16	40	RFP-108 RFP-40MM RFP-110 RFP-111	RCI-108 RCI-40MM RCI-110 RCI-111	6140 27312	6 1/8 155.6	5 1/8 130.2	2 1/4 57.2	1/2 12.7	1 9/16 39.7	3 3/8 85.7	2 7/8 73.0	1 1/8 28.6	4 1/4 108.0	7/16	10.1 4.58
1 3/4 1 15/16 2	45 50	RFP-112 RFP-45MM RFP-115 RFP-50MM RFP-200	RCI-112 RCI-45MM RCI-115 RCI-50MM RCI-200	8070 35897	6 3/8 161.9	5 3/8 136.5	2 5/16 58.7	9/16 14.3	1 9/16 39.7	3 1/2 88.9	3 1/4 82.6	1 1/4 31.8	4 1/2 114.3	7/16	11.6 5.26
2 3/16	55	RFP-55MM RFP-203	RCI-55MM RCI-203	8570 38121	7 1/8 181.0	6 152.4	2 1/2 63.5	9/16 14.3	1 11/16 42.9	3 3/4 95.3	3 5/8 92.1	1 15/16 49.2	5 127.0	1/2	14.5 6.58
2 1/4 2 7/16 2 1/2	60 65	RFP-204 RFP-60MM RFP-207 RFP-208 RFP-65MM	RCI-204 RCI-60MM RCI-207 RCI-208 RCI-65MM	9030 40167	7 5/8 193.7	6 1/2 165.1	2 3/4 69.9	5/8 15.9	1 13/16 46.0	4 101.6	3 15/16 100.0	1 7/16 36.5	5 1/2 139.7	1/2	19 8.62
2 11/16 2 3/4 2 15/16 3	70 75	RFP-211 RFP-212 RFP-70MM RFP-215 RFP-75MM RFP-300	RCI-211 RCI-212 RCI-70MM RCI-215 RCI-75MM RCI-300	9630 42836	8 3/4 222.3	7 1/2 190.5	2 7/8 73.0	3/4 19.1	2 50.8	4 1/2 114.3	4 23/32 119.9	1 9/16 39.7	6 3/8 161.9	5/8	26.7 12.11
3 3/16 3 1/4 3 7/16 3 1/2	80 85 90 95	RFP-80MM RFP-303 RFP-304 RFP-85MM RFP-307 RFP-308 RFP-90MM RFP-95MM	RCI-80MM RCI-303 RCI-304 RCI-85MM RCI-307 RCI-308 RCI-90MM RCI-95MM	15320 68147	10 1/4 260.4	8 5/8 219.1	3 3/8 85.7	7/8 22.2	2 7/16 61.9	5 127.0	5 7/16 138.1	1 5/8 41.3	7 3/8 187.3	3/4	42.6 19.32
3 15/16 4	100 105	RFP-315 RFP-100MM RFP-400 RFP-105MM	RCI-315 RCI-100MM RCI-400 RCI-105MM	20980 93324	10 7/8 276.2	9 3/8 238.1	4 3/8 111.1	15/16 23.8	2 11/16 68.3	6 1/4 158.8	5 15/16 150.8	2 7/16 61.9	8 1/8 206.4	3/4	55.2 25.04
4 7/16 4 1/2	110 115	RFP-110MM RFP-407 RFP-408 RFP-115MM	RCI-110MM RCI-407 RCI-408 RCI-115MM	25750 114542	13 1/2 342.9	11 3/4 298.5	4 5/8 117.5	1 25.4	3 1/32 77.0	6 3/4 171.5	6 13/32 162.7	2 3/8 60.3	10 1/4 260.4	3/4	91 41.28
4 15/16 5	120 125	RFP-120MM RFP-125MM RFP-415 RFP-500	RCI-120MM RCI-125MM RCI-415 RCI-500	35520 158001	14 3/4 374.7	12 3/4 323.9	5 3/8 136.5	1 1/4 31.8	2 31/32 75.4	7 1/4 184.2	7 13/32 188.1	2 7/8 73.0	11 279.4	7/8	115 52.16

Metric dimensions for reference only.

Rolling Elements: Tapered Roller
Housing: Cast Iron Piloted Flange
Self Alignment: +/- 3 Degrees
Lock: Setscrew, Single Collar
Seal: Felt
Optional Seal: Single Lip Contact
Temperature: -20°F to 220°F

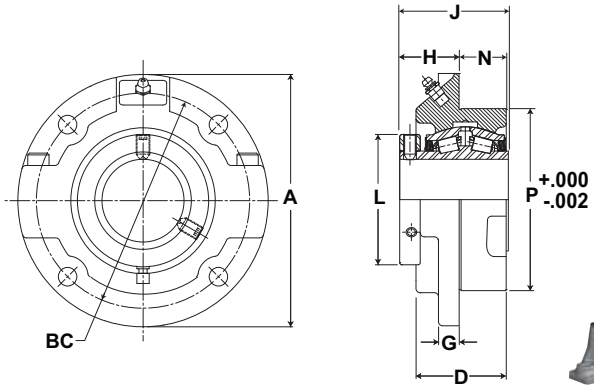

RFPA Series Piloted Flange Cartridge Units - Single Lock Collar

Bore Diameter inch	Bore Diameter mm	Part No.	Bearing Insert No.	Basic Dynamic Rating lb/N	Dimensions inch / mm A	B.C.	D	G	H	J	L	N	P	Bolt Size	Unit Wt. lb/kg
1 3/16 1 1/4		RFPA-103 RFPA-104	RCIA-103 RCIA-104	2975 13233	5 127.0	4 1/8 104.8	1 3/4 44.5	7/16 11.1	1 5/16 33.3	2 3/8 60.3	2 1/4 57.2	7/8 22.2	3 3/8 85.7	3/8	5.5 2.49
1 3/8 1 7/16		RFPA-106 RFPA-107	RCIA-106 RCIA-107	4760 21174	5 1/4 133.4	4 3/8 111.1	2 50.8	1/2 12.7	1 1/2 38.1	2 17/32 64.3	2 5/8 66.7	15/16 23.8	3 5/8 92.1	3/8	6.8 3.08
1 1/2 1 5/8 1 11/16		RFPA-108 RFPA-110 RFPA-111	RCIA-108 RCIA-110 RCIA-111	6140 27312	6 1/8 155.6	5 1/8 130.2	2 1/4 57.2	1/2 12.7	1 9/16 39.7	2 27/32 72.2	2 7/8 73.0	1 1/8 28.6	4 1/4 108.0	7/16	10.1 4.58
1 3/4 1 15/16 2	45 50	RFPA-112 RFPA-45MM RFPA-115 RFPA-50MM RFPA-200	RCIA-112 RCI-45MM RCIA-115 RCI-50MM RCIA-200	8070 35897	6 3/8 161.9	5 3/8 136.5	2 5/16 58.7	9/16 14.3	1 9/16 39.7	2 61/64 75.0	3 1/4 82.6	1 9/16 39.7	4 1/2 114.3	7/16	11.6 5.26
2 3/16	55	RFPA-55MM RFPA-203	RCI-55MM RCIA-203	8570 38121	7 1/8 181.0	6 152.4	2 1/2 63.5	9/16 14.3	1 11/16 42.9	3 1/8 79.4	3 5/8 92.1	1 5/16 33.3	5 127.0	1/2	14.5 6.58
2 1/4 2 7/16 2 1/2	60 65	RFPA-204 RFPA-60MM RFPA-207 RFPA-208 RFPA-65MM	RCIA-204 RCI-60MM RCIA-207 RCIA-208 RCI-65MM	9030 40167	7 5/8 193.7	6 1/2 165.1	2 3/4 69.9	5/8 15.9	1 13/16 46.0	3 5/16 84.1	3 15/16 100.0	1 7/16 36.5	5 1/2 139.7	1/2	19 8.62
2 11/16 2 3/4 2 15/16 3	70 75	RFPA-211 RFPA-212 RFPA-70MM RFPA-215 RFPA-75MM RFPA-300	RCIA-211 RCIA-212 RCI-70MM RCIA-215 RCI-75MM RCIA-300	9630 42836	8 3/4 222.3	7 1/2 190.5	2 7/8 73.0	3/4 19.1	2 50.8	3 11/16 93.7	4 23/32 119.9	1 9/16 39.7	6 3/8 161.9	5/8	26.7 12.11
3 3/16 3 1/4 3 7/16 3 1/2	80 85 90 95	RFPA-80MM RFPA-303 RFPA-304 RFPA-85MM RFPA-307 RFPA-308 RFPA-90MM RFPA-95MM	RCI-80MM RCIA-303 RCIA-304 RCI-85MM RCIA-307 RCIA-308 RCI-90MM RCI-95MM	15320 68147	10 1/4 260.4	8 5/8 219.1	3 3/8 85.7	7/8 22.2	2 7/16 61.9	4 3/16 106.4	5 7/16 138.1	1 5/8 41.3	7 3/8 187.3	3/4	42.6 19.32
3 15/16 4	100 105	RFPA-315 RFPA-100MM RFPA-400 RFPA-105MM	RCIA-315 RCI-100MM RCIA-400 RCI-105MM	20980 93324	10 7/8 276.2	9 3/8 238.1	4 3/8 111.1	15/16 23.8	2 11/16 68.3	5 1/4 133.4	5 15/16 150.8	2 7/16 61.9	8 1/8 206.4	3/4	55.2 25.04
4 7/16 4 1/2	110 115	RFPA-407 RFPA-408	RCI-110MM RCIA-407 RCIA-408 RCI-115MM	25750 114542	13 1/2 342.9	11 3/4 298.5	4 5/8 117.5	1 25.4	3 1/32 77.0	5 1/2 139.7	6 13/32 162.7	2 3/8 60.3	10 1/4 260.4	3/4	91 41.28
4 15/16 5	120 125	RFPA-415 RFPA-500	RCI-120MM RCI-125MM RCIA-415 RCIA-500	35520 158001	14 3/4 374.7	12 3/4 323.9	5 3/8 136.5	1 1/4 31.8	2 31/32 75.4	6 13/64 157.6	7 13/32 188.1	2 7/8 73.0	11 279.4	7/8	115 52.16

Rolling Elements: Tapered Roller
Housing: Cylindrical Cartridge Insert
Self Alignment: +/- 3 Degrees
Lock: Setscrew, Double Collar
Seal: Felt
Optional Seal: Single Lip Contact
Temperature: -20°F to 220°F

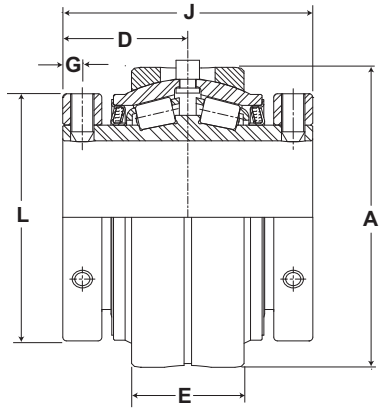

ERCI Series Replacement Cartridge Insert

Bore Diameter inch	Bore Diameter mm	Part No.	Basic Dynamic Rating lb/N	Dimensions inch / mm A +.000 / -.001	D	E	G	J	L	Unit Wt. lb/kg
1 3/4		ERCI-112								
	45	ERCI-45MM								
1 15/16		ERCI-115	8070 35897	3.937 100.0	1 3/4 44.5	1 3/4 44.5	5/16 7.9	3 1/2 88.9	3 1/4 82.6	6.5 2.95
	50	ERCI-50MM								
2		ERCI-200								
	55	ERCI-55MM	8570	4.437	1 7/8	1 3/4	5/16	3 3/4	3 5/8	7.7
2 3/16		ERCI-203	38121	112.7	47.6	44.5	7.9	95.3	92.1	3.49
2 1/4		ERCI-204								
	60	ERCI-60MM								
2 7/16		ERCI-207	9030 40167	4.782 121.5	2 50.8	1 13/16 46.0	5/16 7.9	4 101.6	3 15/16 100.0	10.0 4.54
2 1/2		ERCI-208								
	65	ERCI-65MM								
2 11/16		ERCI-211								
2 3/4		ERCI-212								
	70	ERCI-70MM	9630	5.374	2 1/4	2	7/16	4 1/2	4 23/32	13.0
2 15/16		ERCI-215	42836	136.5	57.2	50.8	11.1	114.3	119.9	5.90
	75	ERCI-75MM								
3		ERCI-300								
	80	ERCI-80MM								
3 3/16		ERCI-303								
	85	ERCI-85MM	15320	6.593	2 1/2	2 1/4	7/16	5	5 7/16	22.0
3 7/16		ERCI-307	68147	167.5	63.5	57.2	11.1	127.0	138.1	9.98
3 1/2		ERCI-308								
	90	ERCI-90MM								
	95	ERCI-95MM								
3 15/16		ERCI-315								
	100	ERCI-100MM	20980	7.187	3 1/8	3 1/8	1/2	6 1/4	5 15/16	30.0
4		ERCI-400	93321	182.5	79.4	79.4	12.7	158.8	150.8	13.61
	105	ERCI-105MM								
	110	ERCI-110MM								
4 7/16		ERCI-407	25750	7.999	3 3/8	3 1/4	1/2	6 3/4	6 13/32	38.4
4 1/2		ERCI-408	114542	203.2	85.7	82.6	12.7	171.5	162.7	17.42
	115	ERCI-115MM								
	120	ERCI-120MM								
	125	ERCI-125MM	35520	9.061	3 5/8	3 3/4	5/8	7 1/4	7 13/32	55.0
4 15/16		ERCI-415	158001	230.1	92.1	95.3	15.9	184.2	188.1	24.95
5		ERCI-500								

Metric dimensions for reference only.
Not all parts are available from stock. Please contact customer service for availability (800) 626-2120.
For more information on bearing capabilities outside of our standard offering, please contact Application Engineering (800) 626-2093.

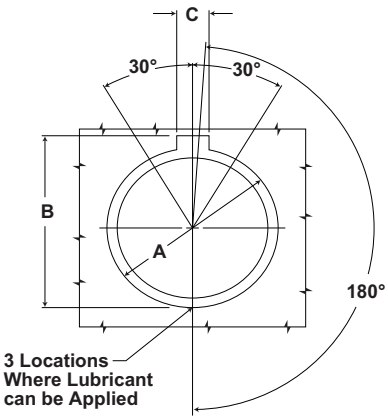

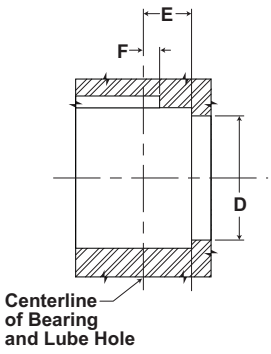

ERCI Series Housing Bore Dimensions

Bore Diameter		Dimensions inch / mm					
inch	mm	A +.002 / -.000 +.05 / -.000	B +.01 / -.00 +.25 / -.00	C +.01 / -.00 +.25 / -.00	D ±.01 ±.25	E ±.01 ±.25	F ±.005 ±.127
1 3/4 1 15/16 2	45 50	3.939 100.05	4.12 104.65	.44 11.18	3.63 42.20	.97 24.64	.25 6.35
2 3/16	55	4.439 112.75	4.62 117.35	.56 14.22	4.00 101.10	.97 24.64	.38 9.65
2 1/4 2 7/16 2 1/2	60 65	4.782 121.46	5.01 127.25	.56 14.22	4.38 111.25	1.03 26.16	.38 9.65
2 11/16 2 3/4 2 15/16 3	70 75	5.376 136.55	5.50 139.70	.56 14.22	5.12 130.05	1.16 29.46	.38 9.65
3 3/16 3 7/16 3 1/2	80 85 90 95	6.595 167.51	6.89 175.01	.75 19.05	6.00 152.40	1.28 32.51	.50 12.70
3 15/16 4	100 105	7.189 182.60	7.46 189.48	.75 19.05	6.62 168.15	1.75 44.45	.50 12.70
4 7/16 4 1/8	110 115	8.001 203.23	8.28 210.31	.75 19.05	7.25 184.15	1.81 45.97	.50 12.70
4 15/16 5	120 125	9.063 230.20	9.34 237.24	.75 19.05	8.50 215.90	2.06 52.35	.50 12.70

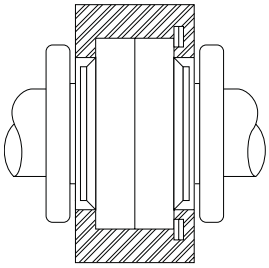

Cartridge Fixed Between Shoulder and Snap Ring

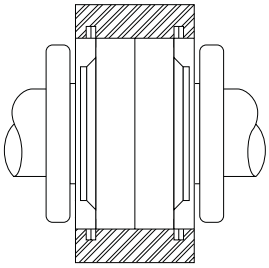

Cartridge Set For Expansion And Held Between Snap Rings

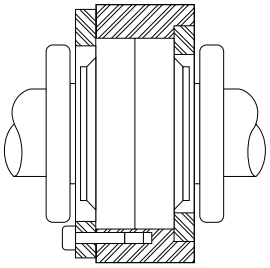

Cartridge Fixed Between Two Types of Collars

Rolling Elements: Tapered Roller
Housing: Cylindrical Cartridge Insert
Self Alignment: +/- 3 Degrees
Lock: Setscrew, Single and Double Collar
Seal: Felt
Optional Seal: Single Lip Contact
Temperature: -20°F to 220°F

RCI and RCIA Series Replacement Cartridge Inserts - Inch

Bore Diameter inch	RCI Felt Seal	Contact Seal	Hi-Temp Seal	Unit Wt. lb/kg
1 3/16	RCI-103	RCI-103-C	RCI-103-N	2.0 .91
1 1/4	RCI-104	RCI-104-C	RCI-104-N	1.9 .86
1 3/8	RCI-106	RCI-106-C	RCI-106-N	2.9 1.32
1 7/16	RCI-107	RCI-107-C	RCI-107-N	2.7 1.22
1 1/2	RCI-108	RCI-108-C	RCI-108-N	4.5 2.04
1 5/8	RCI-110	RCI-110-C	RCI-110-N	4.2 1.91
1 11/16	RCI-111	RCI-111-C	RCI-111-N	4.0 1.81
1 3/4	RCI-112	RCI-112-C	RCI-112-N	5.3 2.40
1 15/16	RCI-115	RCI-115-C	RCI-115-N	4.8 2.18
2 7/16	RCI-207	RCI-207-C	RCI-207-N	7.4 3.36
2 1/2	RCI-208	RCI-208-C	RCI-208-N	7.2 3.27
2 11/16	RCI-211	RCI-211-C	RCI-211-N	11.5 5.22
2 3/4	RCI-212	RCI-212-C	RCI-212-N	11.3 5.13
2 15/16	RCI-215	RCI-215-C	RCI-215-N	10.3 4.67
3	RCI-300	RCI-300-C	RCI-300-N	10.0 4.54
3 3/16	RCI-303	RCI-303-C	RCI-303-N	19.6 8.89
3 7/16	RCI-307	RCI-307-C	RCI-307-N	17.8 8.07
3 1/2	RCI-308	RCI-308-C	RCI-308-N	17.3 7.85
3 15/16	RCI-315	RCI-315-C	RCI-315-N	23.1 10.48
4	RCI-400	RCI-400-C	RCI-400-N	22.6 10.25
4 7/16	RCI-407	RCI-407-C	RCI-407-N	30.4 13.79
4 1/2	RCI-408	RCI-408-C	RCI-408-N	29.9 13.56
4 15/16	RCI-415	RCI-415-C	RCI-415-N	45.6 20.68
5	RCI-500	RCI-500-C	RCI-500-N	44.4 20.14

Bore Diameter inch	RCIA Felt Seal	Contact Seal	Hi-Temp Seal	Unit Wt. lb/kg
1 3/16	RCIA-103	RCIA-103-C	RCIA-103-N	2.0 .91
1 1/4	RCIA-104	RCIA-104-C	RCIA-104-N	1.9 .86
1 3/8	RCIA-106	RCIA-106-C	RCIA-106-N	2.9 1.32
1 7/16	RCIA-107	RCIA-107-C	RCIA-107-N	2.7 1.22
1 1/2	RCIA-108	RCIA-108-C	RCIA-108-N	4.5 2.04
1 5/8	RCIA-110	RCIA-110-C	RCIA-110-N	4.2 1.91
1 11/16	RCIA-111	RCIA-111-C	RCIA-111-N	4.0 1.81
1 3/4	RCIA-112	RCIA-112-C	RCIA-112-N	5.3 2.40
1 15/16	RCIA-115	RCIA-115-C	RCIA-115-N	4.8 2.18
2 7/16	RCIA-207	RCIA-207-C	RCIA-207-N	7.4 3.36
2 1/2	RCIA-208	RCIA-208-C	RCIA-208-N	7.2 3.27
2 11/16	RCIA-211	RCIA-211-C	RCIA-211-N	11.5 5.22
2 3/4	RCIA-212	RCIA-212-C	RCIA-212-N	11.3 5.13
2 15/16	RCIA-215	RCIA-215-C	RCIA-215-N	10.3 4.67
3	RCIA-300	RCIA-300-C	RCIA-300-N	10.0 4.54
3 3/16	RCIA-303	RCIA-303-C	RCIA-303-N	19.6 8.89
3 7/16	RCIA-307	RCIA-307-C	RCIA-307-N	17.8 8.07
3 1/2	RCIA-308	RCIA-308-C	RCIA-308-N	17.3 7.85
3 15/16	RCIA-315	RCIA-315-C	RCIA-315-N	23.1 10.48
4	RCIA-400	RCIA-400-C	RCIA-400-N	22.6 10.25
4 7/16	RCIA-407	RCIA-407-C	RCIA-407-N	30.4 13.79
4 1/2	RCIA-408	RCIA-408-C	RCIA-408-N	29.9 13.56
4 15/16	RCIA-415	RCIA-415-C	RCIA-415-N	45.6 20.68
5	RCIA-500	RCIA-500-C	RCIA-500-N	44.4 20.14

RCI-M and RCIA-M - Replacement Cartridge Inserts - Metric

Bore Diameter mm	RCI-M Felt Seal	Contact Seal	Hi-Temp Seal
35	RCI-35MM	RCI35MM-C	RCI35MM-N
40	RCI-40MM	RCI40MM-C	RCI40MM-N
45	RCI-45MM	RCI45MM-C	RCI45MM-N
50	RCI-50MM	RCI50MM-C	RCI50MM-N
55	RCI-55MM	RCI55MM-C	RCI55MM-N
60	RCI-60MM	RCI60MM-C	RCI60MM-N
65	RCI-65MM	RCI65MM-C	RCI65MM-N
70	RCI-70MM	RCI70MM-C	RCI70MM-N
75	RCI-75MM	RCI75MM-C	RCI75MM-N
80	RCI-80MM	RCI80MM-C	RCI80MM-N
95	RCI-85MM	RCI85MM-C	RCI85MM-N
90	RCI-90MM	RCI90MM-C	RCI90MM-N
95	RCI-95MM	RCI95MM-C	RCI95MM-N
100	RCI-100MM	RCI100MM-C	RCI100MM-N
105	RCI-105MM	RCI105MM-C	RCI105MM-N
110	RCI-110MM	RCI110MM-C	RCI110MM-N
115	RCI-115MM	RCI115MM-C	RCI115MM-N
120	RCI-120MM	RCI120MM-C	RCI120MM-N
125	RCI-125MM	RCI125MM-C	RCI125MM-N

Bore Diameter mm	RCIA-M Felt Seal	Contact Seal	Hi-Temp Seal
35	RCIA-35MM	RCIA35MM-C	RCIA35MM-N
40	RCIA-40MM	RCIA40MM-C	RCIA40MM-N
45	RCIA-45MM	RCIA45MM-C	RCIA45MM-N
50	RCIA-50MM	RCIA50MM-C	RCIA50MM-N
55	RCIA-55MM	RCIA55MM-C	RCIA55MM-N
60	RCIA-60MM	RCIA60MM-C	RCIA60MM-N
65	RCIA-65MM	RCIA65MM-C	RCIA65MM-N
70	RCIA-70MM	RCIA70MM-C	RCIA70MM-N
75	RCIA-75MM	RCIA75MM-C	RCIA75MM-N
80	RCIA-80MM	RCIA80MM-C	RCIA80MM-N
95	RCIA-85MM	RCIA85MM-C	RCIA85MM-N
90	RCIA-90MM	RCIA90MM-C	RCIA90MM-N
95	RCIA-95MM	RCIA95MM-C	RCIA95MM-N
100	RCIA-100MM	RCIA100MM-C	RCIA100MM-N
105	RCIA-105MM	RCIA105MM-C	RCIA105MM-N
110	RCIA-110MM	RCIA110MM-C	RCIA110MM-N
115	RCIA-115MM	RCIA115MM-C	RCIA115MM-N
120	RCIA-120MM	RCIA120MM-C	RCIA120MM-N
125	RCIA-125MM	RCIA125MM-C	RCIA125MM-N

Browning® E920 Series Tapered Roller Bearing

Browning® 920 series mounted tapered roller bearings feature one-piece durable cast iron non-expansion housings with Type E mounting dimensions and limited misalignment. The E920 series contains setscrew locking collars for easy installation and contact face riding seals to provide a good balance between contaminant entry, grease retention and friction. Depending on your application requirements, these bearings are available in a wide variety of bore sizes and housing configurations as illustrated on the pages to follow.

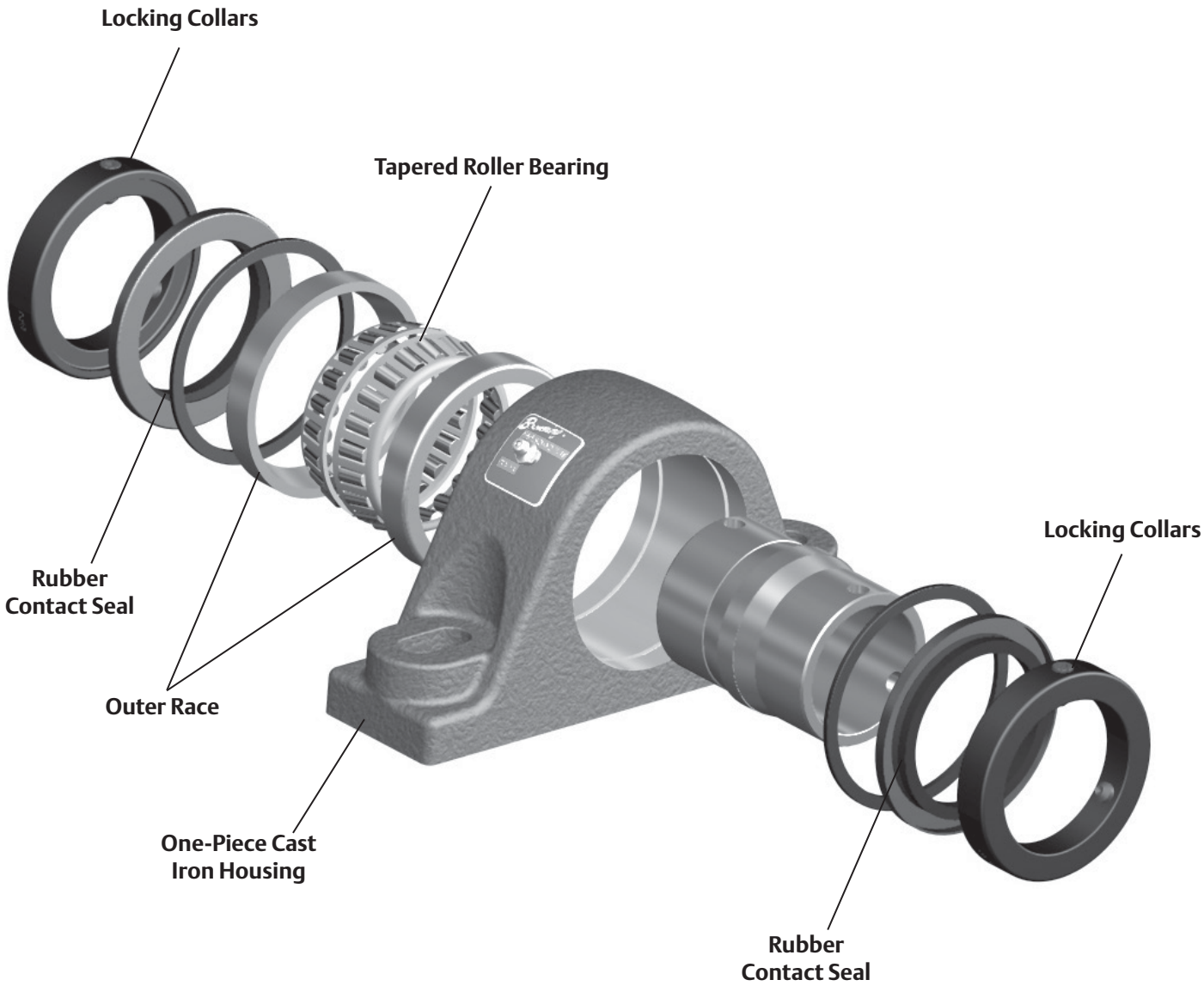

E920 Series Tapered Roller Nomenclature

Housing Assembly

Housing Type
- PB - Pillow Block
- FB - Four Bolt Flange
- TU - Take-Up

Series
- E920 - Setscrew

Pillow Block Bolts
- F - Four Bolts

Bore Size (Inches)

PB E920 F X 2 7/16

Take-Up Frames

Nominal & Actual Adjustments (Inches)

Take-Up Frame

Series
- 1000 - Center Pull (TUE920)

Compatible Range

D	- Up to 2”
EL	- 2 3/16”
EH	- 2 3/16”
F	- 2 1/4” to 2 7/16”
GH	- 2 15/16”
GL	- 2 15/16”
JH	- 3 7/16”
JL	- 3 7/16””
K	- 3 15/16” to 4 7/16”

12-16.5 T 1000 D

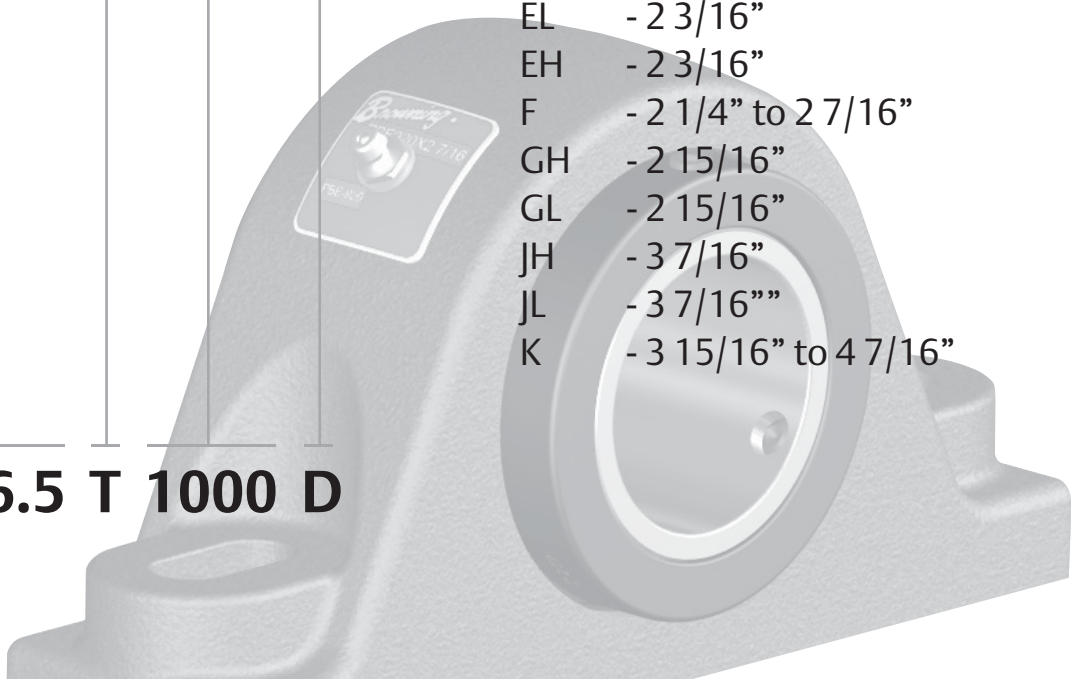

Features and Benefits

Tapered Roller Bearings

Browning® E920 Series mounted tapered roller bearings are available from 1 3/16” to 5” in a two and four bolt pillow blocks, four bolt flanges and take-up housing styles. All units are completely assembled, adjusted and lubricated at the factory and are ready for use.

Heavy Duty Tapered Roller Bearings

Heavy duty tapered roller bearings for radial, thrust and combination loading.

One-Piece Cast Iron Housing

Durable one-piece cast iron housings provide support load.

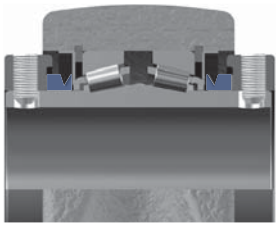

Contact Seal

Rubber contact face riding seals rotate with the shaft to help retain lubricant and help exclude contaminants.

Collar Mount System

Two locking collars are standard on all units with two setscrews at 120° for balanced three point contact and holding power. Locking collars are black oxide treated.

Rolling Elements: Tapered Roller

Housing: Cast Iron, Two And Four Bolt Pillow Blocks

Lock: Setscrew, Double Collar

Seal: Contact

Temperature: -20°F to 200°F

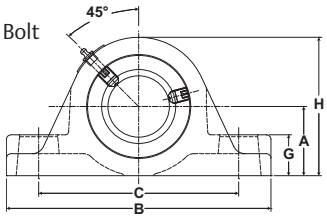

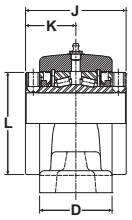

Type SR / Two-Bolt

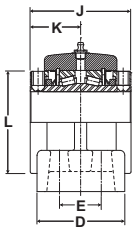

Type SR / Four-Bolt

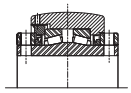

Type LN

PBE920 Series Two and Four-Bolt Base Pillow Blocks

Bore Diameter	Part No.	Basic Dynamic Rating lb/N	Type*	Dimensions inch / mm													Unit Wt. lb/kg
				A	B	C		D	E	G	H	J	K	L	Bolt Size		
inch						Min.	Max.								2 Bolt	4 Bolt	
1 3/16 1 1/4	PBE920x 1 3/16 PBE920x 1 1/4	2975 13233	SR	1 1/2 38.1	6 3/8 161.9	4 5/16 109.5	5 127.0	1 7/8 47.6	-----	7/8 22.2	3 76.2	2 3/4 69.9	1 25/64 35.3	2 1/4 57.2	1/2	-----	4.0 1.81
1 3/8 1 7/16	PBE920x 1 3/8 PBE920x 1 7/16	4760 21172	SR	1 7/8 47.6	7 3/8 187.3	5 127.0	6 152.4	2 1/8 54.0	-----	1 1/8 28.6	3 3/4 95.3	3 76.2	1 1/2 38.1	2 3/4 69.9	1/2	-----	6.9 3.1
1 1/2 1 5/8 1 11/16	PBE920x 1 1/2 PBE920x 1 5/8 PBE920x 1 11/16	6140 27311	SR	2 1/8 54.0	7 7/8 200.0	5 11/16 144.5	6 1/2 165.1	2 1/2 63.5	-----	1 1/4 31.8	4 1/4 108.0	3 3/8 85.7	1 11/16 42.9	3 3/16 81.0	1/2	-----	9.5 4.31
1 3/4 1 15/16 2	PBE920x 1 3/4 PBE920x 1 15/16 PBE920x 2	8070 35895	SR	2 1/4 57.2	8 7/8 225.4	6 3/16 157.2	7 1/4 184.2	2 1/2 63.5	-----	1 1/4 31.8	4 1/2 114.3	3 1/2 88.9	1 3/4 44.5	3 7/16 87.3	5/8	-----	10.9 4.94
2 3/16	PBE920x 2 3/16	8570 38119	SR	2 1/2 63.5	9 5/8 244.5	6 11/16 169.9	8 203.2	2 5/8 66.7	-----	1 7/16 36.5	5 127.0	3 3/4 95.3	1 7/8 47.6	3 3/4 95.3	5/8	-----	14.0 6.35
2 1/4 2 7/16 2 1/2	PBE920x 2 1/4 PBE920x 2 7/16 PBE920x 2 1/2	9030 40165	SR	2 3/4 69.9	10 1/2 266.7	7 1/8 181.0	8 3/4 222.3	2 7/8 73.0	-----	1 5/8 41.3	5 1/2 139.7	4 101.6	2 50.8	4 1/16 103.2	5/8	-----	19.0 8.62
2 11/16 2 3/4 2 15/16 3	PBE920x 2 11/16 PBE920x 2 3/4 PBE920x 2 15/16 PBE920x 3	9630 42834	SR	3 1/8 79.4	12 304.8	8 7/16 214.3	9 3/4 247.7	3 76.2	-----	1 3/4 44.5	6 1/4 158.8	4 1/2 114.3	2 1/4 57.2	4 23/32 119.9	3/4	-----	26.0 11.79
3 3/16 3 7/16 3 1/2	PBE920x 3 3/16 PBE920x 3 7/16 PBE920x 3 1/2	15320 68143	LN	3 3/4 95.3	14 355.6	9 3/4 247.7	11 1/2 292.1	3 5/8 92.1	-----	2 1/8 54.0	7 1/2 190.5	5 127.0	2 1/2 63.5	5 7/16 138.1	7/8	-----	44.0 19.96
2 1/4 2 7/16 2 1/2	PBE920Fx 2 1/4 PBE920Fx 2 7/16 PBE920Fx 2 1/2	9030 40165	SR	2 3/4 69.9	10 1/2 266.7	7 1/8 181.0	8 3/4 222.3	3 1/2 88.9	1 7/8 47.6	1 5/8 41.3	5 1/2 139.7	4 101.6	2 50.8	4 1/16 103.2	-----	5/8	19 8.62
2 11/16 2 3/4 2 15/16 3	PBE920Fx 2 11/16 PBE920Fx 2 3/4 PBE920Fx 2 15/16 PBE920Fx 3	9630 42834	SR	3 1/8 79.4	12 304.8	8 203.2	9 7/8 250.8	4 101.6	2 1/8 54.0	1 3/4 44.5	6 1/4 158.8	4 1/2 114.3	2 1/4 57.2	4 23/32 119.9	-----	5/8	26 11.79
3 3/16 3 7/16 3 1/2	PBE920Fx 3 3/16 PBE920Fx 3 7/16 PBE920Fx 3 1/2	15320 68143	LN	3 3/4 95.3	14 355.6	9 11/16 246.1	11 7/16 290.5	4 1/2 114.3	2 3/8 60	2 1/8 54.0	7 1/2 190.5	5 127.0	2 1/2 63.5	5 7/16 138.1	-----	3/4	44 19.96
3 15/16 4	PBE920Fx 3 15/16 PBE920Fx 4	20980 93319	LN	4 1/4 108.0	15 1/4 387.4	10 7/16 265.1	12 7/8 327.0	4 1/2 114.3	2 1/4 57.2	2 7/16 61.9	8 1/2 215.9	6 1/4 158.8	3 1/8 79.4	5 15/16 150.8		3/4	65 29.48
4 7/16 4 1/2	PBE920Fx 4 7/16 PBE920Fx 4 1/2	25750 114536	LN	4 3/4 120.7	16 5/8 422.3	11 1/4 285.8	13 7/8 352.4	4 5/8 117.6	2 1/2 63.5	2 3/4 69.9	9 3/8 238.1	6 3/4 171.5	3 3/8 85.7	6 13/32 162.7	-----	3/4	65 29
4 15/16 5	PBE920Fx 4 15/16 PBE920Fx 5	35520 157993	LN	5 1/2 139.7	18 1/2 469.9	13 330.2	15 7/8 403.2	5 1/8 130.2	2 3/4 69.9	3 1/8 79.4	10 7/8 276.2	7 1/4 184.2	3 5/8 92.1	7 13/32 188.1	-----	7/8	132 59.87

*Type LN and SR are different internal mounting configurations as shown in line drawings.

Metric dimensions for reference only.
Not all parts are available from stock. Please contact customer service for availability (800) 626-2120.
For more information on bearing capabilities outside of our standard offering, please contact Application Engineering (800) 626-2093.

E920 Series Bearings

Rolling Elements: Tapered Roller

Housing: Cast Iron, Four Bolt, Flange Block

Lock: Setscrew, Double Collar

Seal: Contact

Temperature: -20°F to 200°F

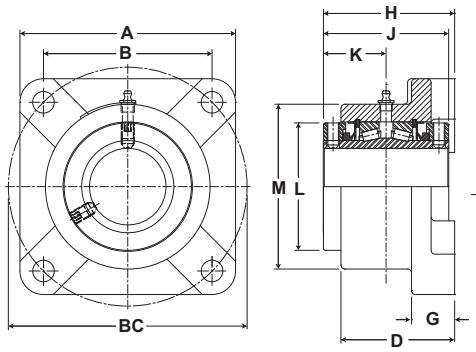

Type SR

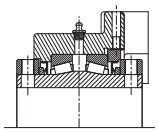

Type LN

FBE920 Series Four-Bolt Flange Units

Bore Diameter inch	Part No.	Basic Dynamic Rating lb/N	Type*	Dimensions inch / mm A	B.C.	B	D	G	H	J	L	M	Bolt Size	Unit Wt. lb/kg
1 3/16 1 1/4	FBE920x 1 3/16 FBE920x 1 1/4	2975 13233	SR	3 3/4 95.3	4 1/16 103.3	2 7/8 73.0	2 3/8 60.3	1 1/32 26.2	2 27/32 72.2	2 3/4 69.9	2 1/4 57.2	3 76.2	3/8	4.5 2.04
1 3/8 1 7/16	FBE920x 1 3/8 FBE920x 1 7/16	4760 21172	SR	4 5/8 117.5	4 61/64 125.8	3 1/2 88.9	2 5/8 66.7	1 1/16 27.0	3 5/64 78.2	3 76.2	2 3/4 69.9	3 5/8 92.1	1/2	6.7 3.04
1 1/2 1 5/8 1 11/16	FBE920x 1 1/2 FBE920x 1 5/8 FBE920x 1 11/16	6140 27311	SR	5 3/8 136.5	5 53/64 148.0	4 1/8 104.8	3 76.2	1 3/16 30.2	3 29/64 87.7	3 3/8 85.7	3 3/16 81.0	4 1/4 108.0	1/2	10.0 4.54
1 3/4 1 15/16 2	FBE920x 1 3/4 FBE920x 1 15/16 FBE920x 2	8070 35895	SR	5 5/8 142.9	6 3/16 157.2	4 3/8 111.1	3 1/8 79.4	1 3/16 30.2	3 5/8 92.1	3 1/2 88.9	3 7/16 87.3	4 1/2 114.3	1/2	12.0 5.44
2 3/16	FBE920x 2 3/16	8570 38119	SR	6 1/4 158.8	6 57/64 175.0	4 7/8 123.8	3 5/16 84.1	1 1/4 31.8	3 7/8 98.3	3 3/4 95.0	3 3/4 95.3	4 7/8 123.8	5/8	16.0 7.26
2 1/4 2 7/16 2 1/2 2 1/2	FBE920x 2 1/4 FBE920x 2 7/16 FBE920x 2 1/2 FBE920x 2 1/2	9030 40165	SR	6 7/8 174.6	7 39/64 193.3	5 3/8 136.5	3 5/8 92.1	1 1/2 38.1	4 3/16 106.3	4 101.6	4 1/16 103.2	5 1/4 133.4	5/8	21.0 9.53
2 11/16 2 3/4 2 15/16 3	FBE920x 2 11/16 FBE920x 2 3/4 FBE920x 2 15/16 FBE920x 3	9630 42834	SR	7 3/4 196.9	8 31/64 215.5	6 152.4	3 15/16 100.0	1 5/8 41.3	4 11/16 119.1	4 1/2 114.3	4 23/32 119.9	6 1/8 155.6	3/4	28.0 12.70
3 3/16 3 7/16 3 1/2	FBE920x 3 3/16 FBE920x 3 7/16 FBE920x 3 1/2	15320 68143	LN	9 1/4 235.0	9 29/32 251.6	7 177.8	4 9/16 115.9	1 7/8 47.6	5 1/4 133.4	5 127.0	5 7/16 138.1	7 1/2 190.5	3/4	46.0 20.87
3 15/16 4	FBE920x 3 15/16 FBE920x 4	20980 93319	LN	10 1/4 260.4	10 31/32 278.6	7 3/4 196.9	5 11/16 144.5	2 3/16 55.6	6 9/16 166.7	6 1/4 158.6	5 15/16 150.8	8 1/4 209.6	7/8	64.0 29.03

*Type LN and SR are different internal mounting configurations as shown in line drawings.

Metric dimensions for reference only.
Not all parts are available from stock. Please contact customer service for availability (800) 626-2120.
For more information on bearing capabilities outside of our standard offering, please contact Application Engineering (800) 626-2093.

Rolling Elements: Tapered Roller
Housing: Cast Iron, Take Ups
Lock: Setscrew, Double Collar
Seal: Contact
Temperature: -20°F to 200°F

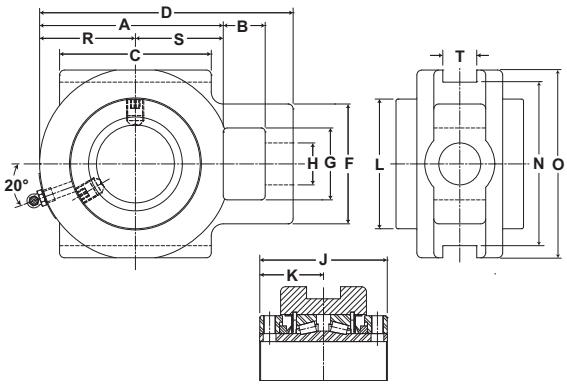

TUE920 Series Take Up Units

Bore Diameter inch	Part No.	Basic Dynamic Rating lb/N	Dimensions inch / mm A	B	C	D	F	G	H	J	K	L	N	O	R	S	T	Unit Wt. lb/kg
1 3/8*	TUE920x 1 3/8	4760	3 3/4	5/8	2 3/4	5 3/32	2 7/16	1 7/16	13/16	3	1 1/2	2 3/4	3 1/2	4 1/8	1 3/4	1 29/32	17/32	6.0
1 7/16*	TUE920x 1 7/16	21172	95.8	15.9	69.9	129.4	61.9	36.5	20.6	76.2	38.1	69.9	88.9	104.8	47.3	48.4	13.5	2.72
1 1/2	TUE920x 1 1/2	6140	4 5/16	1 1/16	3 1/4	6	2 7/8	1 15/16	1 1/16	3 3/8	1 11/16	3 3/16	4	4 3/4	2 1/4	2 1/8	11/16	9.0
1 11/16	TUE920x 1 11/16	27311	109.5	27.0	82.6	152.4	73.0	49.2	27.0	85.7	42.9	81.0	101.6	120.7	55.5	54.0	17.5	4.08
1 3/4	TUE920x 1 3/4	8070	4 3/8	1 1/16	3 1/2	6 3/16	2 7/8	1 15/16	1 1/16	3 1/2	1 3/4	3 7/16	4	4 3/4	2 1/2	2 1/8	11/16	12.0
1 15/16	TUE920x 1 15/16	35895	111.3	27.0	88.9	157.2	73.0	49.2	27.0	88.9	44.5	87.3	101.6	120.7	57.3	54.0	17.5	5.44
2	TUE920x 2																	
2 3/16	TUE920x 2 3/16	8570	4 7/8	1 3/16	3 3/4	6 13/16	3 1/2	2 1/4	1 3/16	3 3/4	1 7/8	3 3/4	4 1/2	5 1/4	2 1/2	2 3/8	13/16	16.0
		38119	123.7	30.2	95.3	173.0	88.9	57.2	30.2	95.3	47.6	95.3	114.3	133.4	63.4	60.3	20.6	7.26
2 7/16	TUE920x 2 7/16	9030	5 3/4	1 5/16	4 3/4	7 15/16	3 3/4	2 1/4	1 5/16	4	2	4 1/16	5 1/8	5 7/8	3	2 3/4	1 1/16	21.0
2 1/2	TUE920x 2 1/2	40165	146.1	33.3	120.7	201.6	95.3	57.2	33.3	101.6	50.8	103.2	130.0	149.2	76.2	69.9	27.0	9.53
2 11/16	TUE920x 2 11/16																	
2 3/4	TUE920x 2 3/4	9630	6 3/16	1 9/16	4 3/4	8 3/4	4 1/4	2 3/4	1 9/16	4 1/2	2 1/4	4 23/32	5 15/16	6 3/4	3 1/4	3	1 13/16	30.0
2 15/16	TUE920x 2 15/16	42834	157.2	39.7	120.7	222.3	108.0	69.9	39.7	114.3	57.2	119.9	150.6	171.5	81.0	76.2	46.0	13.61
3	TUE920x 3																	
3 7/16	TUE920x 3 7/16	15320	7 5/8	1 13/16	6 1/4	10 7/16	4 7/8	2 7/8	1 13/16	5	2 1/2	5 7/16	6 13/16	7 5/8	4	3 5/8	1 13/16	44.0
		68143	193.8	46.0	158.8	265.1	123.8	73.0	46.0	127.0	63.5	138.1	173.0	193.7	101.7	92.1	46.0	19.96
3 15/16	TUE920x 3 15/16	20980	8 9/16	2 1/8	7	11 13/16	5 5/8	3 3/8	2 3/16	6 1/4	3 1/8	5 15/16	8 5/8	9 7/16	4 1/2	4 1/8	2 1/16	70.0
		93319	217.2	54.0	177.8	300.0	142.9	85.7	55.6	158.8	79.4	150.8	219.1	239.7	112.4	104.8	52.4	31.75
4 7/16	TUE920x 4 7/16	25750	8 9/16	2 1/8	7	11 13/16	5 5/8	3 3/8	2 3/16	6 3/4	3 3/8	6 13/32	8 5/8	9 7/16	4 1/2	4 1/8	2 1/16	74.0
		114536	217.2	54.0	177.8	300.0	142.9	85.7	55.6	171.5	85.7	162.7	219.1	239.7	112.4	104.8	52.4	33.57

Part Numbers are specified by TUE 920 and bore size: Example, TUE920 x 1 3/16.
These Take-Up Bearings are to be used with Take-Up Frames shown on page I-45 and I-46.
Bearing unit and frame must be ordered separately.
* Take -Up frames not available in these sizes.

E920 Series Bearings

Housing: All Steel Take-Up Frame, Removable Top Permits Assembling Of Take-Up Unit On Shelf Before Inserting In Take-Up Frame

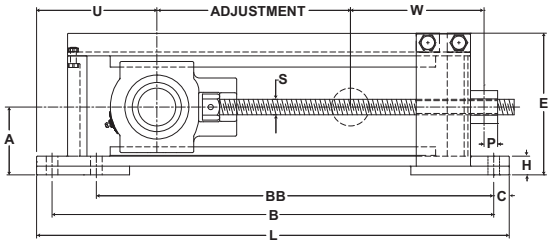

T1000 Take Up Frames

Bore Diameter	Part No.	Dimensions inch / mm																			Unit Wt.
		Adjustment		A	B	BB	C	E	G	H	K	L	M	P	S	U	V	W	Bolts Req'd		
inch		Nominal	Actual																No.	Size	lb/kg
1 3/4	12-16.5T1000D	12 304.8	16.5 419.1	3 15/16 100.0	27 1/2 698.5	26 1/2 673.1						29 1/2 749.3									60.0 27.22
1 15/16	18-22.5T1000D	18 457.2	22.5 571.5	3 15/16 100.0	33 1/2 850.9	32 1/2 825.5	1 25.4	8 9/32 210.3	4 101.6	1 1/4 31.8	-----	35 1/2 901.7	1 7/8 47.6	1 1/4 31.8	1-8NC	5 3/8 136.5	-----	5 5/8 142.9	2	5/8	70.0 31.75
2	24-28.5T1000D	24 609.6	28.5 723.9	3 15/16 100.0	39 1/2 1,003.3	38 1/2 977.9						41 1/2 1,054.1									80.0 36.29
2 3/16	12-17T1000EL	12 304.8	17.0 431.8	4 3/16 106.4	27 1/2 698.5							29 1/2 749.3									65.0 29.48
	18-23T1000EL	18 457.2	23.0 584.2	4 3/16 106.4	33 1/2 850.9	-----	1 25.4	8 21/32 219.9	4 101.6	1 3/8 34.9	-----	35 1/2 901.7	2 50.8	1 5/8 41.3	1 1/8-7NC	4 9/16 115.9	-----	5 15/16 150.8	2	5/8	77.0 34.93
	24-29T1000EL	24 609.6	29.0 736.6	4 3/16 106.4	39 1/2 1,003.3							41 1/2 1,054.1									86.0 39.01
2 3/16	12-17T1000EH	12 304.8	17.0 431.8	4 7/16 112.7	27 1/2 698.5							29 1/2 749.3									68.0 30.8
	18-23T1000EH	18 457.2	23.0 584.2	4 7/16 112.7	33 1/2 850.9	-----	1 25.4	8 29/32 226.2	4 101.6	1 5/8 41.3	-----	35 1/2 901.7	2 50.8	1 5/8 41.3	1 1/8-7NC	4 9/16 115.9	-----	5 15/16 150.8	2	5/8	80.0 36.29
	24-29T1000EH	24 609.6	29.0 736.6	4 7/16 112.7	39 1/2 1,003.3							41 1/2 1,054.1									91.0 41.28
2 7/16	12-16.6T1000F	12 304.8	16.6 421.64	4 3/8 111.1	28 1/2 723.9							30 1/2 774.7									71.0 32.21
	18-22.6T1000F	18 457.2	22.6 574.04	4 3/8 111.1	34 1/2 876.3	-----	1 25.4	9 9/32 235.7	4 101.6	1 1/8 28.6	-----	36 1/2 927.1	2 1/8 54.0	1 3/4 44.5	1 1/4-7NC	5 5/16 134.9	-----	6 9/16 166.7	2	3/4	81.0 36.74
2 1/2	24-28.6T1000F	24 609.6	28.6 726.44	4 3/8 111.1	40 1/2 1,028.7							42 1/2 1,079.5									91.0 41.28
	30-34.6T1000F	30 762.0	34.6 878.84	4 3/8 111.1	46 1/2 1,181.1							48 1/2 1,231.9									111.0 50.35
2 11/16	12-15.5T1000GL	12 304.8	15.5 393.7	4 15/16 125.4	30 1/2 774.7							32 1/2 825.5									105.0 47.63
2 3/4	18-21.5T1000GL	18 457.2	21.5 546.1	4 15/16 125.4	36 1/2 927.1	-----	1 25.4	10 11/16 271.5	5 127.0	31/32 24.6	1 1/2 38.1	38 1/2 977.9	2 3/8 60.3	1/2 12.7	1 1/2-6NC	6 1/2 165.1	2 50.8	8 1/2 215.9	4	5/8	120.0 54.43
2 15/16	24-27.5T1000GL	24 609.6	27.5 698.5	4 15/16 125.4	42 1/2 1,079.5							44 1/2 1,130.3									135.0 61.23
3	30-33.5T1000GL	30 762	33.5 850.9	4 15/16 125.4	48 1/2 1,231.9							50 1/2 1,282.7									150.0 68.04

Part Numbers are specified by "T1000" with travel adjustment and bore size.
Example 12-16.6T1000 has 12"-16.6" adjustment and will accommodate a TUE920x 2 7/16" or USTU5000-207 bearing unit.
These Take-Up Frames are to be used with TUE Take-Up Units shown on page I-44 and USTU Take-Up Units shown on page H-21.
Bearing unit and frame must be ordered separately.
Frames give greater ACTUAL adjustment, often permitting use of shorter, more compact frames.
Frames with over 12" nominal adjustment have a third foot in the center for extra support.

Metric dimensions for reference only.
Not all parts are available from stock. Please contact customer service for availability (800) 626-2120.
For more information on bearing capabilities outside of our standard offering, please contact Application Engineering (800) 626-2093.

Housing: All Steel Take-Up Frame, Removable Top Permits Assembling Of Take-Up Unit On Shelf Before Inserting In Take-Up Frame

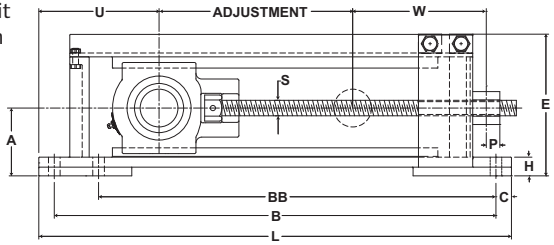

T1000 Take Up Frames Continued

Bore Diameter	Part No.	Dimensions inch / mm																			Unit Wt.
		Adjustment		A	B	BB	C	E	G	H	K	L	M	P	S	U	V	W	Bolts Req'd		
inch		Nominal	Actual																No.	Size	lb/kg
2 11/16	12-15.5T1000GH	12	15.5	5 1/8	30 1/2	-----	1	10 7/8	5	1 5/32	1 1/2	32 1/2	2 3/8	1/2	1 1/2-6NC	6 1/2	2	8 1/2	4	5/8	109.0
		304.8	393.7	130.2	774.7		25.4	276.2	127.0	29.4	38.1	825.5	60.3	12.7		165.1	50.8	215.9			49.44
2 3/4	18-21.5T1000GH	18	21.5	5 1/8	36 1/2							38 1/2									126.0
		457.2	546.1	130.2	927.1							977.9									57.15
2 15/16	24-27.5T1000GH	24	27.5	5 1/8	42 1/2							44 1/2									141.0
		609.6	698.5	130.2	1,079.5							1130.3									63.96
3	30-33.5T1000GH	30	33.5	5 1/8	48 1/2							50 1/2									156.0
		762.0	850.9	130.2	1,231.9							1,282.7									70.76
3 3/16	12-15.5T1000JL	12	15.5	5 7/16	32	-----	1 1/8	11 5/8	5	1 1/32	1 1/2	34 1/4	2 19/32	1	1 3/4-5NC	7 5/16	2	9 3/16	4	3/4	138.0
		304.8	393.7	138.1	812.8		28.6	295.3	127.0	26.2	38.1	870.0	65.9	25.4		185.7	50.8	233.4			62.60
3 7/16	18-21.5T1000JL	18	21.5	5 7/16	38							40 1/4									156.0
		457.2	546.1	138.1	965.2							1022.4									70.76
3 1/2	24-27.5T1000JL	24	27.5	5 7/16	44							46 1/4									173.0
		609.6	698.5	138.1	1117.6							1174.8									78.47
	30-33.5T1000JL	30	33.5	5 7/16	50							52 1/4									191.0
		762	850.9	138.1	1,270.0							1,327.2									86.64
3 3/16	12-15.5T1000JH	12	15.5	5 5/8	32	-----	1 1/8	11 13/16	5	1 7/32	1 1/2	34 1/4	2 19/32	1	1 3/4-5NC	7 5/16	2	9 3/16	4	3/4	145.0
		304.8	393.7	142.9	812.8		28.6	300.0	127.0	31.0	38.1	867	65.9	25.4		185.7	50.8	233.4			65.77
3 7/16	18-21.5T1000JH	18	21.5	5 5/8	38							40 1/4									163.0
		457.2	546.1	142.9	965.2							1022.4									73.94
3 1/2	24-27.5T1000JH	24	27.5	5 5/8	44							46 1/4									179.0
		609.6	698.5	142.9	1,117.6							1174.8									81.19
	30-33.5T1000JH	30	33.5	5 5/8	50							52 1/4									197.0
		762.0	850.9	142.9	1,270.0							1327.2									89.36
3 11/16	12-18T1000K	12	18.0	7	36	-----	1 1/4	14 15/32	6	1 7/16	1 3/4	38 1/2	2 31/32	1 5/8	2-4 1/2NC	7 1/2	2 1/2	10 7/16	4	3/4	191.0
		304.8	457.2	177.8	914.4		31.8	367.5	152.4	36.5	44.5	977.9	75.4	41.3		190.5	63.5	265.1			86.64
3 15/16	18-24T1000K	18	24	7	42							44 1/2									223.0
		457.2	609.6	177.8	1,066.8							1,130.3									101.15
4	24-30T1000K	24	30	7	48							50 1/2									249.0
		609.6	762	177.8	1219.2							1,282.7									112.94
4 7/16	30-36T1000K	30	36	7	54							56 1/2									274.0
		762	914.4	177.8	1,371.6							1,435.1									124.28
4 1/2																					

Part Numbers are specified by "T1000" with travel adjustment and bore size.
Example 12-16.6T1000 has 12"-16.6" adjustment and will accommodate a TUE920x 2 7/16" or USTU5000-207 bearing unit.
These Take-Up Frames are to be used with TUE Take-Up Units shown on page I-44 and USTU Take-Up Units shown on page H-21.
Bearing unit and frame must be ordered separately.
Frames give greater ACTUAL adjustment, often permitting use of shorter, more compact frames.
Frames with over 12" nominal adjustment have a third foot in the center for extra support.

Table of Contents

Load Ratings and Life

Life Calculations

The L10 (rating) life for any given application and bearing selection can be calculated in terms of millions of revolutions by using the bearing Basic Dynamic Rating and applied radial load (or, equivalent radial load in the case of radial bearing applications having combined radial and thrust loads). The L10 life for any given application can be calculated in terms of hours, using the bearing Basic Dynamic Rating, applied load (or equivalent radial load) and suitable speed factors. The BDR for double row spherical roller bearings is based on one million revolutions and the equation to calculate their L10 life is as follows:

Spherical Roller Bearing

$$L_{10} = \left(\frac{C}{P}\right)^{10/3} \times \frac{1{,}000{,}000}{60 \times n} = \left(\frac{C}{P}\right)^{10/3} \times \frac{16667}{n}$$

Where: L_{10} = The # of hours that 90% of identical bearings under ideal conditions will operate at a specific speed and condition before fatigue is expected to occur.

C = Basic Dynamic Rating (lbs) 1,000,000 Revolutions

P = Constant Equivalent Radial Load (lbs)

n = Speed (RPM)

The BDR for tapered roller bearings is based on 90 million revolutions instead of one million for other types of bearings. Therefore there is a specific equation used to calculate their L10 life.

Tapered Roller Bearing

$$L_{10} = \left(\frac{C90}{P}\right)^{10/3} \times \frac{90{,}000{,}000}{60 \times n} = \left(\frac{C90}{P}\right)^{10/3} \times \frac{1{,}500{,}000}{n}$$

Where: L_{10} = The # of hours that 90% of identical bearings under ideal conditions will operate at a specific speed and condition before fatigue is expected to occur.

C90 = 2-Row Basic Dynamic Rating (lbs) 90,000,000 Revolutions

P = Constant Equivalent Radial Load (lbs)

n = Speed (RPM)*

* For speeds less than 50 RPM, use 50 RPM when doing L10 calculations.

Note: L10 life does not apply to rod ends and plain spherical bearings due to the sliding motion between components versus a rolling motion. Normal operation of these types of bearings results in wear of the raceways or fatigue or fracture of the outer member. Give consideration to this in the design of the equipment.

Shock and Vibration

Vibration and shock loading can act a additional loading to the steady expected applied load. When shock or vibration is present, multiply the theoretical life by the factors below to determine adjusted theoretical life.

Mounted Roller Bearing Shock Vibration Factors	
Steady Loading	1.0
Light Shock / Vibration	0.5
Moderate Shock / Vibration	0.3

Additionally, the ABMA provides application factors for all types of bearings which need to be considered to determine an adjusted Rated Life (Lna). L10 life rating is based on laboratory conditions yet other factors are encountered in actual bearing application that will reduce bearing life. Lna life rating takes into account reliability factors, material type, and operating conditions.

$$L_{na} = a_1 \times a_2 \times a_3 \times L_{10}$$

Where:

L_{na} = Adjusted Rated Life.

a_1 = Reliability Factor. Adjustment factor applied where estimated fatigue life is based on reliability other than 90% (See Table No 1).

a_2 = Material Factor. Life adjustment for bearing race material. Regal Power Transmission Solutions bearing races are manufactured from bearing quality steel. Therefore the a_2 factor is 1.0.

a_3 = Life Adjustment Factor for Operating Conditions. This factor should take into account the adequacy of lubricant, presence of foreign matter, conditions causing changes in material properties, and unusual loading or mounting conditions. Assuming a properly selected and mounted bearing having adequate seals and lubricant operating below 250°F and tight fitted to the shaft, the a_3 factor should be 1.0.

Table No. 1 Life Adjustment Factor for Reliability

Reliability %	L_{na}	a_1
90	L10	1
95	L5	0.62
96	L4	0.53
97	L3	0.44
98	L2	0.33
99	L1	0.21
50	L50	5

Load Ratings and Life Continued

Mounted bearings are typically "slip fitted" to the shaft and rely on design features such as the inner race length and locking device for support.

Vibration and shock loading can act as an additional loading to the steady expected applied load. When shock or vibration is present, an a^3 Life Adjustment Factor can be applied. Shock loading has many variables which often are not easily determined. Typically, it is best to rely on one's experience with the particular application. Consult Application Engineering for assistance with applications involving shock or vibration loading.

The a^3 factor takes into account a wide range of application and mounting conditions as well as bearing features and design. Accurate determination of this factor is normally achieved through testing and in-field experience. Regal Power Transmission Solutions offers a wide range of options which can maximize bearing performance. Consult Application Engineering for more information. See sample calculations on page I-54.

Combined Load – Tapered Roller Bearings

1. Calculate the bearing internal thrust reaction (FIR):

$$FIR = \frac{0.6 \times F}{K}$$

- applied radial load
- factor K in Table No. 6

2. If the thrust load (Fa) is less than or equal to FIR, then calculate the equivalent radial load as follows:

$$P = (0.5 \times F_r) + (0.83 \times K \times F_a)$$

3. If the thrust load (Fa) is greater than FIR then calculate the equivalent radial load as follows:

$$P = (0.4 \times F_r) + (K \times F_a)$$

4. Calculate the expected L10 life using the single row basic dynamic load rating:

$$L10 = \left(\frac{\text{single row load rating}}{P}\right)^{10/3} \times \frac{3000 \times 500}{n}$$

Table No. 2 - Sealmaster RPB and Browning E920 Tapered Roller Bearing Load Ratings

Bore Size		Radial Rating (pounds)		(1) Thrust Rating (pounds)	Factor K	Allowable Thrust on Pillow Block Housing	
inch	mm	2 Row	1 Row			2 Bolt Base	4 Bolt Base
1 3/16 - 1 1/4	-	2975	1710	1390	1.23	960	-
1 3/8 - 1 7/16	35	4760	2740	2080	1.31	1600	-
1 1/2 - 1 11/16	40	6140	3530	2600	1.36	1580	-
1 3/4 - 2	45 - 50	8070	4640	2540	1.83	2500	-
2 3/16	55	8570	4910	2980	1.65	2360	-
2 1/4 - 2 1/2	60 - 65	9030	5220	3470	1.51	2350	5700
2 11/16 - 3	70 - 75	9630	5510	4260	1.30	3340	5700
3 3/16 - 3 1/2	80 - 95	15320	8790	7410	1.19	4450	10980
3 15/16 - 4	100 - 105	20980	12100	9800	1.23	-	7250
4 7/16 - 4 1/2	110 - 115	25750	14800	13100	1.13	-	6680
4 15/16 - 4 1/2	120 - 125	35520	20400	16000	1.27	-	9000

(1) For thrust load pillow block applications, the bearing thrust rating must be compared to the allowable thrust load capacity of the housing. In a number of sizes, the allowable thrust capacity of the pillow block is less than the thrust rating of the bearing. When this circumstance exists, do not exceed the pillow block housing thrust capacity. In thrust applications utilizing flange or piloted flange housings, please contact application engineering for allowable housing thrust limits.

Load Ratings and Life Continued

Combined Load – Double Row Spherical Roller Bearings

1. Calculate Fa/Fr and compare the value to the "e" value found in following tables. Fa/Fr must be less than 1.

2. Choose values for "X" and "Y" from Table 3.

Table No. 3 - Sealmaster USRB Spherical Roller Bearing Load Ratings

Bore Size (inch)	Basic Dynamic Rating	Basic Static Rating		$F_a/F_r \leq e$		$F_a/F_r > e$		Combined Static Load Factors	
	C (lb)	C_o (lb)	e	X	Y	X	Y	X_o	Y_o
1 1/8 - 1 1/2	20368	23609	.34	1.0	2.0	0.67	2.9	1.0	1.9
1 11/16 - 1 3/4	22689	28021	.32	1.0	2.1	0.67	3.2	1.0	2.1
1 15/16 - 2	23520	29918	.31	1.0	2.2	0.67	3.2	1.0	2.1
2 3/16	28087	34981	.30	1.0	2.3	0.67	3.4	1.0	2.2
2 7/16 - 2 1/2	44691	59535	.31	1.0	2.2	0.67	3.3	1.0	2.2
2 11/16 - 3	47447	65610	.29	1.0	2.3	0.67	3.4	1.0	2.3
3 3/16 - 3 /12	72640	105628	.29	1.0	2.3	0.67	3.5	1.0	2.3
3 11/16 - 4	96050	136151	.30	1.0	2.3	0.67	3.4	1.0	2.2
4 7/16 - 4 1/2	111537	161283	.30	1.0	2.3	0.67	3.4	1.0	2.2
4 15/16 - 5	158816	247307	.32	1.0	2.1	0.67	3.2	1.0	2.1
5 7/16	196682	290447	.33	1.0	2.0	0.67	3.0	1.0	2.0
5 15/16	261346	390391	.35	1.0	1.9	0.67	2.9	1.0	1.9
6 7/16 - 7	334229	498544	.35	1.0	1.9	0.67	2.9	1.0	1.9
7 1/2 - 8	363818	587106	.35	1.0	1.9	0.67	2.9	1.0	1.9

3. Calculate equivalent load using the following equation:

$$P = XFr + YFa$$

4. Calculate the L10 life using the life equation on page I-48.

Load Ratings and Life Continued

Variable Load Formula

Root mean load (RML) is to be used when a number of varying loads are applied to a bearing for varying time limits. Maximum loading still must be considered for bearing size selection.

$$\text{RML}^* = \sqrt[10/3]{\frac{(L_1^{10/3} N_1) + (L_2^{10/3} N_2) + (L_3^{10/3} N_3)}{100}}$$

Where,
RML = Root Mean Load (lbs.)
L1, L2, etc. = Load in pounds
N1, N2, etc. = Percent of total time operated at loads L1, L2, etc.

* Apply RML to rating at mean speed to determine resultant life.

Mean Speed Formula

The following formula is to be used when operating speed varies over time.

$$\text{Mean Speed} = \frac{S_1N_1 + S_2N_2 + S_3N_3}{100}$$

S_1S_2, etc = Speeds in RPM
N_1N_2, etc = Percentage of total time operated at speeds S_1S_2, etc

Bearing Life In Oscillating Applications

The equivalent rotative speed (ERS) is used in life calculations when the bearing does not make complete revolutions during operation. The ERS is then used as the bearing operating speed in the calculation of the L10 (Rating) Life. The formula is based on sufficient angular rotation to have roller paths overlap.

ERS = Equivalent Rotative Speed
N = Total number of degrees per minute through which the bearing will rotate.

$$\text{ERS} = \frac{N}{360}$$

In the above formula, allowance is made for the total number of stress applications on the weakest race per unit time, which, in turn, determines fatigue life and the speed factors. The theory behind fretting corrosion is best explained by the fact that the rolling elements in small angles of oscillation retrace a path over an unchanging area of the inner or outer races where the lubricant is prevented by inertia from flowing in behind the roller as the bearing oscillates in one direction. Upon reversal, this small area of rolling contact is traversed by the same roller in the dry state. The friction of the two unlubricated surfaces causes fretting corrosion and produces failures which are unpredictable from a normal life standpoint.

With a given bearing selected for an oscillating application, the best lubrication means is a light mineral oil under positive flow conditions. With a light oil, there is a tendency for all areas in the bearing load zone to be immersed in lubricant at all times. The full flow lubrication dictates that any oxidized material which may form is immediately carried away by the lubricant, and since these oxides are abrasive, further wear tends to be avoided. If grease lubrication must be used, it is best to consult with either the bearing manufacturer or the lubricant manufacturer to determine the best possible type of lubricant. Greases have been compounded to resist the detrimental effect of fretting corrosion for such applications.

Load Ratings and Life Continued

Static Load Rating

The "static load rating" for rolling element bearings is that uniformly distributed static radial load acting on a non-rotating bearing, which produces a contact stress of 580,000 psi at the center of the most heavily loaded rolling element. At this stress level, plastic deformation begins to be significant. Experience has shown that the plastic deformation at this stress level can be tolerated in most bearing applications without impairment of subsequent bearing operation. In certain applications where subsequent rotation of the bearing is slow and where smoothness and friction requirements are not too exacting, a higher static load limit can be tolerated. Where extreme smoothness is required or friction requirements are critical, a lower static load limit may be necessary.

Load Ratings and Life Continued

Minimum Bearing Load:

Skidding, or sliding, of the rolling elements on the raceway instead of a true rolling motion can cause excessive wear. Applications with high speeds and light loading are particularly prone to skidding. As a general guideline, rolling element bearings should be radially loaded at least 2% of Basic Dynamic Rating for roller bearings. For applications where load is light relative to the bearings dynamic load rating, consult Application Engineering for assistance.

Computing Bearing Loads

In the computation of bearing loads in any application of an Regal Power Transmission Solutions unit, the principal factor determining the selection of the unit is the equivalent radial load to which the bearing will be subjected. These radial loads result from any one or any combination of the following sources:

1. Weights of machine parts supported by bearings.
2. Tension due to belt or chain pull.
3. Centrifugal force from out of balance, eccentric or cam action.

The resulting load from any one, or any combination of the above sources is further determined by knowing:

1. The magnitude of the load.
2. Direction of the load.
3. The point of load application.
4. The distance between bearing centers.

Bearing loads are the result of force acting on the shaft. Direction, magnitude, and location with respect to the bearings must be considered when calculating bearing loads. The following cases are typical examples of loads encountered and methods of calculating bearing loads.

CASE #1
Drive Load Calculation

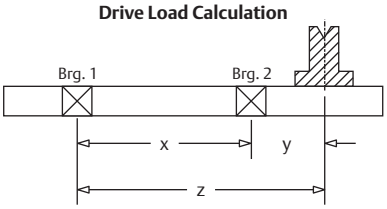

$$P = \frac{126{,}000 \times HP}{RPM \times d} \times K$$ = Apply P to Case 2, 3 or 4 if applicable

HP = horsepower
RPM = revolutions per minute
d = pitch of pulley in inches
K = constant for type of drive used
K = 1.5 for V-belts
K = 2 to 3 for flat transmission belts
K = 1.1 for chain drives

CASE #2
Cantilever and Drive

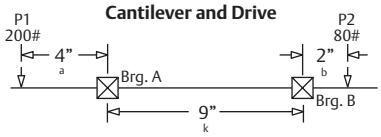

$$\text{Load on Bearing A} = \frac{P_1 \times (a + k) - (P_2 \times b)}{k}$$

$$= \frac{200 \times (4 + 9) - (80 \times 2)}{9}$$

= 271 lbs.

$$\text{Load on Bearing B} = \frac{P_2 \times (k + b) - (P_1 \times a)}{k}$$

$$= \frac{80 \times (9 + 2) - (200 \times 4)}{9}$$

= 9 lbs.

CASE #3
Straddle, Cantilever Drive

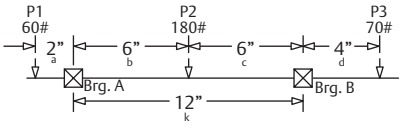

$$\text{Load on Bearing A} = \frac{P_1 \times (k + a) + (P_2 \times c) - (P_3 \times d)}{k}$$

$$= \frac{60 \times (12 + 2) + (180 \times 6) - (70 \times 4)}{12}$$

= 137 lbs.

$$\text{Load on Bearing B} = \frac{-(P_1 \times a) + (P_2 + b) + P_3 \times (k + d)}{k}$$

$$= \frac{-(60 \times 2) + (180 \times 6) + 70 \times (12 + 4)}{12}$$

= 173 lbs.

CASE #4
Straddle Mount, Cantilever Drive

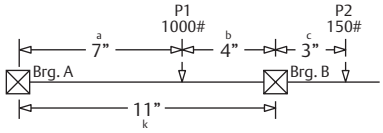

$$\text{Load on Bearing A} = \frac{(P_1 \times b) - (P_2 \times c)}{k}$$

$$= \frac{(1000 \times 4) - (150 \times 3)}{11}$$

= 323 lbs.

$$\text{Load on Bearing B} = \frac{(P_1 \times a) + (c + k) \times (P_2)}{k}$$

$$= \frac{(1000 \times 7) + (3 + 11) \times (150)}{11}$$

= 827 lbs.

CASE #5
Vibrating Drives

Load due to Centrifugal and Inertial Forces - In a shaker or gyrating screen bearing application, the load on the bearings is increased by sudden stopping, starting, and reversing of typically large loads. This can be expressed as a basic physical law:

Force = Mass x Accelerations

In order to use this law, we develop from it the following equation:

$$F = .000341 \times WR(RPM)^2$$

Where: F = Load of force in lbs.
W = Weight of rotating mass in lbs.
R = Radius of rotation or throw in feet
RPM = Shaft rotation in revolutions per minute

What is the centrifugal bearing load on a shaker screen which weighs 2,500 lbs., has a throw of 1/4 in. and whose shaft speed is 500 RPM?

$$F = .000341 \times 2{,}500 \times \frac{.250}{12} \times (500)^2 = 4{,}440 \text{ lbs.}$$

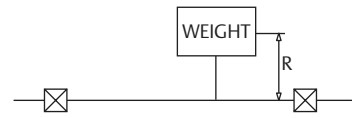

Load Ratings and Life Continued

Mounted Roller Bearing Selection - New Applications:

Using variations of the life formulas and application information, it is possible to select bearings based on desired life, load applied, and shaft speed. **This method is applicable only when thrust load is less than or equal to 1/2 the radial load.**

1. Determine required application hours (Lna).

2. Calculate L10 using adjustment factors:

$$L10 = \frac{L_a}{a_1 \times a_2 \times a_3}$$

3. Calculate Basic Dynamic Radial Rating (Creq).

$$Creq = P \times \left(\frac{L10 \times N}{3{,}000 \times 500}\right)^{3/10}$$

P = Constant Equivalent Radial Load (lbs)
N = Speed (RPM)

4. Use Table 2 on page I-49, find a basic Dynamic Radial Rating Value greater than or equal to Creq calculated in step # 3.

5. Select any bearing from the row in step # 4 or larger.

6. Proceed with housing, seal, and lock selection pages I-3 to I-5.

Typical operating temperature range for standard bearings is -20° to 200° F for Browning and -20°F to 220°F for Sealmaster Gold. For operating temperatures outside this range, contact Application Engineering. For Maximum speed information, see tables on page I-58.

Application Examples:

Question #1:
What is the bearing life (L_{10} hours) for an RPB207-2 Tapered Roller Bearing with no shock conditions and the following application criteria?

Design Radial Load (P) = 5,000 lbs.
Speed (n) = 100 RPM
Shaft Size = 2 7/16”
Operating Temperature = 125°F

Solution:
1. Begin with the L_{10} life formula:

$$L_{10} = (C/P)^{10/3} \times \frac{500 \times 3{,}000}{n}$$

2. RPB207-2 has 2 7/16” shaft size. From Table 2 on page I-49, the radial rating is 9,030 lbs.

$$L_{10}\ \text{hrs.} = \left(\frac{9{,}030}{5{,}000}\right)^{10/3} \times \frac{500 \times 3{,}000}{100} = 107{,}601$$

Question #2:
What is the bearing life (L_{10} hours) for an USRB5000-207 Spherical Roller Bearing with no shock conditions and the same application criteria?

Solution:
1. Begin with the L_{10} life formula:

$$L_{10} = (C/P)^{10/3} \times \frac{16{,}667}{n}$$

2. USRB5000-207 has 2 7/16” shaft size. From Table 3 on page I-50, the radial rating is 44,691 lbs.

$$L_{10}\ \text{hrs.} = \left(\frac{44{,}691}{5{,}000}\right)^{10/3} \times \frac{16{,}667}{100} = 246{,}997$$

Load Ratings and Life Continued

Combined Radial and Thrust Load Application Examples:

Question #1:
What is the bearing life (L_{10} hours) for an RPB207-2 Tapered Roller Bearing with no shock conditions and the following application criteria?

Design Radial Load (Fr) = 5,000 lbs.
Design Thrust Load (Fa) = 1,000 lbs.
Speed (n) = 100 RPM
Shaft Size = 2 7/16"
Operating Temperature = 125°F

Solution:
1. Find the K factor value from Table 2 on page I-49, K = 1.51

2. Calculate the internal thrust reaction (FIR):

$$\text{FIR} = \frac{0.6 \times F_r}{K}$$ - applied radial load
- factor K in Table No. 2

$$\text{FIR} = \frac{0.6 \times 5000}{1.51} = 1{,}987 \text{ lbs.}$$

3. Since the thrust load is less than the internal thrust reaction (FIR) use the following formula from page I-49 to calculate the equivalent radial load:

$$P = (0.5 \times F_r) + (.83 \times K \times F_a)$$
$$P = (0.5 \times 5000) + (.83 \times 1.51 \times 1000) = 3{,}753 \text{ lbs.}$$

4. Calculate the expected L_{10} life using the single row rating. Single row rating = 5,220 lbs. This is found in Table 2 on page I-49.

$$L_{10} = \left(\frac{\text{single row load rating}}{P}\right)^{10/3} \times \frac{500 \times 3000}{n}$$

$$L_{10} = \left(\frac{5{,}220}{3{,}753}\right)^{10/3} \times \frac{500 \times 3000}{100} = 45{,}054 \text{ hrs.}$$

Question #2:
What is the bearing life (L_{10} hours) for an USRB5000-207 Spherical Roller Bearing with no shock conditions and the same application criteria?

Solution:
1. Calculate Fa/Fr and compare the value to the "e" value found in Table 3 on page I-50.

Fa/Fr = 1,000/5,000 = .20

2. Choose values for "x" and "y" based on Step 1 above from Table 3 on page I-50.

3. Calculate the equivalent load.

$$P = (x\,Fr) + (y\,Fa)$$
$$= (1 \times 5{,}000) + (2.2 \times 1000)$$
$$= 7{,}200 \text{ lbs.}$$

4. Calculate the expected L_{10} life using the rating from the equation on page I-48.

$$L_{10} = (C/P)^{10/3} \times \frac{16{,}667}{n}$$
$$= \left(\frac{44{,}691}{7{,}200}\right)^{10/3} \times \frac{16{,}667}{100}$$
$$= 73{,}251 \text{ hrs.}$$

Shock Load Considerations

Question #3:
What is the bearing life (L_{10} hours) for the bearing in Question #1 and #2 with moderate shock conditions and the same application criteria from above?

Solution:
1. Calculate the Adjusted Rate Life

$$Lna = a_1 \times a_2 \times a_3 \times L_{10}$$

2. (a_1) = Life Adjustment Factor for Reliability = 1.0

3. (a_2) = Life Adjustment Factor for Operating Conditions = 1.0

4. (a_3) = For moderate shock (from mounted Roller Bearing Shock Vibration Factors Table on page I-48) = 0.5

RPB207-2 Tapered Roller Bearing:
$$L_{10} = .5 \times 45{,}054 = 22{,}527 \text{ hrs.}$$

USRB5000-207 Spherical Roller Bearing:
$$L_{10} = .5 \times 73{,}251 = 36{,}626 \text{ hrs.}$$

Table 4 - Sealmaster RPB and Browning E920 Tapered Roller Bearing Load / Speed Chart

Bore Size inch	Bore Size mm	"K" Factor	Basic Dynamic Rating Double Row lb/N	Basic Dynamic Rating Single Row* lb/N	Thrust Rating lb/N	Hours	Revolutions Per Minute 50	100	150	250	500	750	1000	1500	1750	2000	2500	3000	3500	4000
1 3/16	-	1.23	2975	1710	1390	5000	3360	3360	3360	3142	2552	2260	2073	1836	1753	1684	1575	1491	1424	1368
1 1/4			13233	7006	6183	10000	3360	3360	2975	2552	2073	1836	1684	1491	1424	1368	1279	1211	1156	1111
						30000	2975	2416	2140	1836	1491	1320	1211	1072	1024	984	920	871	832	799
						50000	2552	2073	1836	1575	1279	1133	1039	920	878	844	789	747	714	685
						100000	2073	1684	1491	1279	1039	920	844	747	714	685	641	607	580	556
1 3/8	35	1.31	4760	2740	2080	5000	5376	5376	5376	5028	4084	3616	3317	2937	2804	2694	2520	2386	2278	-
1 7/16			21174	12188	9252	10000	5376	5376	4760	4084	3317	2937	2694	2386	2278	2188	2047	1938	1850	-
						30000	4760	3866	3424	2937	2386	2112	1938	1716	1638	1574	1472	1394	1331	-
						50000	4084	3317	2937	2520	2047	1812	1662	1472	1406	1350	1263	1196	1142	-
						100000	3317	26741	2386	2047	1662	1472	1350	1196	1142	1097	1026	971	927	-
1 1/2	40	1.36	6140	3530	2600	5000	6934	6934	6934	6485	5268	4664	4279	3789	3617	3475	3250	3077	-	-
1 11/16			27312	15702	11565	10000	6934	6934	6140	5268	4279	3789	3475	3077	2938	2823	2640	2500	-	-
						30000	6140	4987	4416	3789	3077	2725	2500	2213	2113	2030	1899	1798	-	-
						50000	5268	4279	3789	3250	2640	2338	2144	1899	1813	1742	1629	1542	-	-
						100000	4279	3475	3077	2640	2144	1899	1742	1542	1473	1415	1323	1253	-	-
1 3/4	45	1.83	8070	4640	2540	5000	9114	9114	9114	8524	6923	6130	5624	4979	4754	4568	4272	-	-	-
1 15/16	50		35897	20640	11298	10000	9114	9114	8070	6923	5624	4979	4568	4045	3862	3710	3470	-	-	-
2						30000	8070	6555	5804	4979	4045	3581	3285	2909	2777	2668	2496	-	-	-
						50000	6923	5624	4979	4272	3470	3072	2818	2496	2383	2289	2141	-	-	-
						100000	5624	4568	4045	3470	2818	2496	2289	2027	1935	1859	1739	-	-	-
2 3/16	55	1.65	8570	4910	2980	5000	9679	9679	9679	9052	7352	6510	5972	5288	5049	4851	4537	-	-	-
			38121	21841	13256	10000	9679	9679	8570	7352	5972	5288	4851	4295	4101	3940	3685	-	-	-
						30000	8570	6961	9194	5288	4295	3803	3489	3089	2950	2834	2650	-	-	-
						50000	7352	5972	5288	4537	3685	3263	2993	2650	2530	2431	2274	-	-	-
						100000	5972	4851	4295	3685	2993	2650	2431	2153	2055	1975	1847	-	-	-
2 1/4	60	1.51	9030	5220	3470	5000	10198	10198	10198	9538	7747	6860	6293	5572	5320	5111	-	-	-	-
2 7/16	65		40167	23220	15435	10000	10198	10198	9030	7747	6293	5572	5111	4526	4321	4152	-	-	-	-
2 1/2						30000	9030	7335	6495	5572	4526	4007	3676	3255	3108	2986	-	-	-	-
						50000	7747	6293	5572	4780	3883	3438	3154	2793	2666	2562	-	-	-	-
						100000	6293	5111	4526	3883	3154	2793	2562	2268	2166	2081	-	-	-	-
2 11/16	70	1.30	9630	5510	4260	5000	10876	10876	10876	10171	8262	7316	6711	5942	5674	-	-	-	-	-
2 15/16	75		42836	24510	18949	10000	10876	10876	9630	8262	6711	5942	5451	4826	4608	-	-	-	-	-
3						30000	9360	7822	6926	5942	4826	4274	3920	3471	3314	-	-	-	-	-
						50000	8262	6711	5942	5098	4141	3666	3363	2978	2843	-	-	-	-	-
						100000	6711	5451	4826	4141	3363	2978	2732	2419	2310	-	-	-	-	-
3 3/16	80	1.19	15320	8790	4710	5000	17302	17302	17302	16181	13143	11638	10676	9453	-	-	-	-	-	-
3 7/16	85		68147	39100	20951	10000	17302	17302	15320	13143	10676	9453	8671	7678	-	-	-	-	-	-
3 1/2	90					30000	15320	12444	11018	9453	7678	6799	6273	5522	-	-	-	-	-	-
	95					50000	13143	10676	9453	8110	6587	5833	5351	4738	-	-	-	-	-	-
						100000	10676	8671	7678	6587	5351	4738	4346	3848	-	-	-	-	-	-
3 15/16	100	1.23	20980	12100	9800	5000	23694	23694	23694	22159	17999	15938	14620	12945	-	-	-	-	-	-
4	105		93324	53823	43593	10000	23694	23694	20980	17999	14620	12945	11875	10515	-	-	-	-	-	-
						30000	20980	17041	15089	12945	10515	9311	5841	7563	-	-	-	-	-	-
						50000	17999	14620	12945	11106	9021	7988	7327	6488	-	-	-	-	-	-
						100000	14620	11875	10515	9021	7327	6488	5952	5270	-	-	-	-	-	-
4 7/16	110	1.13	25750	14800	13100	5000	29081	29081	29081	27198	22091	19561	17944	-	-	-	-	-	-	-
4 1/2	115		114542	65834	58272	10000	29081	29081	25750	22091	17944	15889	14575	-	-	-	-	-	-	-
						30000	25750	20915	18520	15889	12906	11427	10483	-	-	-	-	-	-	-
						50000	22091	17944	15889	13631	11072	9804	8993	-	-	-	-	-	-	-
						100000	17944	14575	12906	11072	8993	7963	7305	-	-	-	-	-	-	-
4 15/16	120	1.27	35520	20400	16000	5000	40114	40114	40114	37517	30473	26983	24752	-	-	-	-	-	-	-
5	125		158001	90744	71172	10000	40114	40114	35520	30473	24752	21917	20105	-	-	-	-	-	-	-
						30000	35520	28851	25547	21917	17802	15763	14460	-	-	-	-	-	-	-
						50000	30473	24752	21917	18803	15273	13524	12405	-	-	-	-	-	-	-
						100000	24752	20105	17802	15273	12405	10985	10076	-	-	-	-	-	-	-

This chart displays the Sealmaster RPB and Browning E920 Series Tapered Roller Bearings load capacity for a given L10 life speed and shaft size. Values in the table represent load at ideal conditions. The shaded areas indicate maximum speed for the Sealmaster RPB series only. For combined load determination, see the Bearing Selection section on page I-49. Areas designated by "-" exceed maximum speed value.

*Single Row Basic Dynamic Rating required for determining combined loads as shown on page I-49.

Table 5 - Sealmaster USRB Spherical Roller Bearing Load / Speed Chart

Series	Bore Size	L_{10} Hours	Revolutions per Minute													
			50	100	150	250	500	750	1000	1500	1750	2000	2500	3000	3500	4000
107	1 1/8	5000	9039	7342	6501	5577	4530	4011	3680	3258	3111	2989	2795	2647	2527	2428
	1 3/16	10000	7342	5964	5281	4530	3680	3258	2989	2647	2527	2428	2271	2150	2053	1972
	1 1/4	30000	5281	4289	3798	3258	2647	2343	2150	1903	1817	1746	1633	1546	1476	1418
	1 3/8	50000	4530	3680	3258	2795	2271	2010	1844	1633	1559	1498	1401	1326	1266	1217
	1 7/16	100000	3680	2989	2647	2271	1844	1633	1498	1326	1266	1217	1138	1077	1029	988
	1 1/2															
111	1 11/16	5000	10069	8179	7242	6213	5046	4468	4099	3630	3465	3329	3114	2948	2815	2704
	1 3/4	10000	8179	6643	5882	5046	4099	3630	3329	2948	2815	2704	2529	2395	2286	2197
		30000	5882	4778	4231	3630	2948	2610	2395	2120	2025	1945	1819	1722	1644	1580
		50000	5046	4099	3630	3114	2529	2240	2054	1819	1737	1669	1561	1478	1411	1355
		100000	4099	3329	2948	2529	2054	1819	1669	1478	1411	1355	1268	1200	1146	1101
115	1 15/16	5000	10438	8478	7507	6441	5231	4632	4249	3762	3592	3451	3228	3056	2918	2803
	2	10000	8478	6886	6098	5231	4249	3762	3451	3056	2918	2803	2622	2482	2370	2277
		30000	6098	4953	4386	3762	3056	2706	2482	2198	2099	2016	1886	1785	1705	1638
		50000	5231	4249	3762	3228	2622	2322	2130	1886	1800	1730	1618	1532	1462	1405
		100000	4249	3451	3056	2622	2130	1886	1730	1532	1462	1405	1314	1244	1188	1141
203	2 3/16	5000	12465	10124	8965	7691	6247	5532	5074	4493	4290	4122	3855	3650	3485	3348
		10000	10124	8224	7282	6247	5074	4493	4122	3650	3485	3348	3131	2964	2830	2719
		30000	7282	5915	5237	4493	3650	3232	2964	2625	2506	2408	2252	2132	2036	1956
		50000	6247	5074	4493	3855	3131	2772	2543	2252	2150	2066	1932	1829	1746	1678
		100000	5074	4122	3650	3131	2543	2252	2066	1829	1746	1678	1569	1486	1419	1363
207	2 7/16	5000	19833	16110	14265	12238	9940	8802	8074	7149	6826	6558	6133	5807	5545	-
	2 1/2	10000	16110	13085	11586	9940	8074	7149	6558	5807	5545	5327	4982	4717	4504	-
		30000	11586	9411	8333	7149	5807	5142	4717	4177	3988	3831	3583	3392	3239	-
		50000	9940	8074	7149	6133	4982	4411	4047	3583	3421	3287	3074	2910	2778	-
		100000	8074	6558	5807	4982	4047	3583	3287	2910	2779	2670	2497	2364	2257	-
215	2 11/16	5000	21056	17103	15144	12992	10553	9344	8572	7590	7247	6962	6512	6165	-	-
	2 3/4	10000	17103	13892	12301	10553	8572	7590	6962	6165	5886	5655	5289	5008	-	-
	2 15/16	30000	12301	9991	8847	7590	6165	5459	5008	4434	4234	4067	3804	3602	-	-
	3	50000	10553	8572	7590	6512	5289	4683	4296	3804	3632	3489	3264	3090	-	-
		100000	8572	6962	6165	5289	4296	3804	3489	3090	2950	2834	2651	2510	-	-
307	3 3/16	5000	32237	26184	23185	19891	16157	14306	13123	11620	11095	10659	9969	-	-	-
	3 7/16	10000	26184	21268	18832	16157	13123	11620	10659	9439	9012	8658	8098	-	-	-
	3 1/2	30000	18832	15297	13545	11620	9439	8358	7666	6788	6482	6227	5824	-	-	-
		50000	16157	13123	11620	9969	8098	7170	6577	5824	5561	5342	4996	-	-	-
		100000	13123	10659	9439	8098	6577	5824	5342	4730	4517	4339	4058	-	-	-
315	3 11/16	5000	42626	34623	30657	26302	21364	18917	17353	15365	14671	14095	13182	-	-	-
	3 15/16	10000	34623	28123	24902	21364	17353	15365	14095	12480	11916	11448	10707	-	-	-
	4	30000	24902	20226	17910	15365	12480	11051	10137	8976	8571	8234	7701	-	-	-
		50000	21364	17353	15365	13182	10707	9481	8697	7701	7353	7064	6607	-	-	-
		100000	17353	14095	12480	10707	8697	7701	7064	6255	5972	5738	5366	-	-	-
407	4 7/16	5000	49499	40205	35601	30542	24808	21967	20150	17843	17036	16367	-	-	-	-
	4 1/2	10000	40205	32657	28917	24808	20150	17843	16367	14493	13838	13294	-	-	-	-
		30000	28917	23488	20798	17843	14493	12833	11772	10423	9952	9562	-	-	-	-
		50000	24808	20150	17843	15307	12434	11009	10099	8942	8538	8203	-	-	-	-
		100000	20150	16367	14493	12434	10099	8942	8203	7264	6935	6663	-	-	-	-
415	4 15/16	5000	70481	57248	50691	43489	35324	31278	28692	25406	24258	-	-	-	-	-
	5	10000	57248	46500	41174	35324	28692	25406	23305	20636	19703	-	-	-	-	-
		30000	41174	33444	29613	25406	20636	18272	16762	14842	14171	-	-	-	-	-
		50000	35324	28692	25406	21796	17704	15676	14380	12733	12158	-	-	-	-	-
		100000	28692	23305	20636	17704	14380	12733	11680	10342	9875	-	-	-	-	-
507	5 7/16	5000	87285	70897	62777	53858	43746	38736	35533	31463	-	-	-	-	-	-
	5 1/2	10000	70897	57587	50991	43746	35533	31463	28862	25556	-	-	-	-	-	-
		30000	50991	41418	36674	31463	25556	22629	20758	18381	-	-	-	-	-	-
		50000	43746	35533	31463	26993	21925	19414	17809	15769	-	-	-	-	-	-
		100000	35533	28862	25556	21925	17809	15769	14465	12808	-	-	-	-	-	-
515	5 15/16	5000	115982	94207	83417	71565	58129	51471	47215	41808	-	-	-	-	-	-
		10000	94207	76520	67756	58129	47215	41808	38351	33958	-	-	-	-	-	-
		30000	67756	55035	48731	41808	33958	30069	27583	24424	-	-	-	-	-	-
		50000	58129	47215	41808	35867	29133	25797	23664	20953	-	-	-	-	-	-
		100000	47215	38351	33958	29133	23664	20953	19221	17019	-	-	-	-	-	-
615	6 7/16	5000	143889	116874	103488	88784	72115	63856	58576	51867	-	-	-	-	-	-
	6 1/2	10000	116874	94931	84059	72115	58576	51867	47578	42129	-	-	-	-	-	-
	6 15/16	30000	84059	68277	60457	51867	42129	37304	34219	30300	-	-	-	-	-	-
	7	50000	72115	58576	51867	44498	36143	32004	29357	25995	-	-	-	-	-	-
		100000	58576	47578	42129	36143	29357	25995	23846	21115	-	-	-	-	-	-
708	7 1/2	5000	161458	131145	116124	99625	80921	71653	65728	58200	-	-	-	-	-	-
	7 15/16	10000	131145	106523	94322	80921	65728	58200	53388	47273	-	-	-	-	-	-
	8	30000	94322	76613	67839	58200	47273	41859	38398	34000	-	-	-	-	-	-
		50000	80921	65728	58200	49931	40556	35911	32942	29169	-	-	-	-	-	-
		100000	65728	53388	47273	40556	32942	29169	26757	23693	-	-	-	-	-	-

This chart displays the Sealmaster Unitized Spherical Roller Bearing (USRB) load capacity for a given L10 life, speed and shaft size. Values in the Table represent estimated load at ideal conditions. The shaded areas indicate maximum speed for USRB felt seals. For combined load determination, see the Bearing Selection section on page I-50. Areas designated by "—" exceed maximum speed value. For actual maximum speed limits see table on page I-58.

Speed Limit Tables

Table 6 - Sealmaster RPB Tapered Roller Bearing Maximum Speed Rating

Maximum Operational Speed*		
Bore Size		Speed (RPM)
inch	mm	
1 3/16 - 1 1/4	-	4000
1 3/8 - 1 7/16	35	3500
1 1/2 - 1 11/16	40	3000
1 3/4 - 2 3/16	45 - 50	2500
2 1/4 - 2 1/2	60 - 65	2000
2 11/16 - 3	70 - 75	1750
3 3/16 - 3 1/2	80 - 95	1500
3 15/16 - 4 1/2	100 - 115	1250
4 15/16 - 5	120 - 125	1000

* Tapered Roller Bearing maximum speeds are not limited by seals, value listed is for all seal designs.

Table 7 - Browning E920 Tapered Roller Bearing Maximum Speed Rating

Maximum Operational Speed	
Bore Size	Speed (RPM)
inch	
1 3/16 - 1 1/4	3500
1 3/8 - 1 7/16	3000
1 1/2 - 1 11/16	2500
1 3/4 - 2 3/16	2000
2 1/4 - 2 1/2	1750
2 11/16 - 3	1500
3 3/16 - 4	1000
4 7/16 - 5	750

Table 8 - Sealmaster USRB Spherical Roller Bearing Maximum Speed Rating

Maximum Operational Speed		
Bore Size	Felt Seal (RPM)	Contact Seal (RPM)
inch		
1 1/8 - 1 1/2	4000	3000
1 11/16 - 1 3/4	4000	2750
1 15/16 - 2	4000	2500
2 3/16	3750	2200
2 7/16 - 2 1/2	3250	1750
2 11/16 - 3	3000	1600
3 3/16 - 3 1/2	2500	1350
3 11/16 - 4	2250	1200
4 7/16 - 4 1/2	2000	1100
4 15/16 - 5	1750	900

Values in these tables represent speeds at ideal conditions. Other application factors may reduce the speed rating of a bearing.
Seal limits evaluated at a load of c/10.

Sealmaster RPB Tapered Roller Bearing Installation

Mounting Lock Collar Units:

NOTICE

• These bearings are designed for maximum permissible static misalignment of ± 3 degrees. Installation, handling or operation of the bearing in excess of the maximum of ± 3 degrees can cause reduction in bearing performance and may lead to equipment failure.

• Do not strike or hammer on any component of the bearing and/or shaft. Impact can result in damage to the bearing that may cause reduction in bearing performance and may lead to equipment failure.

Step 1: Inspect Shaft and Bore

Shaft should be within tolerance range shown in Table I, clean and free of nicks and burrs. Mount bearings on unused section of shafting or repair/replace shafting as required. Inspect both the shaft and bearing bore for debris or contaminants. Wipe clean as necessary.

Table I

Recommended Shaft Tolerances	
Nominal Bore Diameter	**Tolerance (inch)**
1 3/16 - 2	+0.000 / -0.0005
2 3/16 - 4	+0.000 / -0.001
4 7/16 - 5	+0.000 / -0.0015

Step 2: Check Support Surfaces

Make sure the base of the housing and the support surfaces are clean and free from burrs. If the housing elevation is adjusted with shims these must cover the entire contact area between the housing and the support surface.

Step 3: Install Unit

To aid installation, keep weight off bearing during mounting. Slide unit onto shaft by pushing on the inner ring. If it is difficult to mount bearing on shaft, use a piece of emery cloth to reduce any high spots on the shaft.

Step 4: Fasten Unit in Place

Install housing mounting bolts and check bearing alignment. Align the bearing units as closely as possible. Tighten mounting bolts to recommended fastener torques. Check the shaft for freedom of rotation by rotating shaft with hand in both directions.

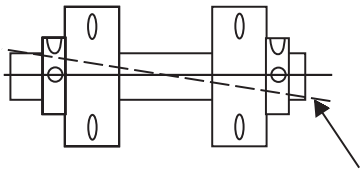

Step 5: Position Insert

If expansion units are used, the insert must be located in the housing to allow for axial shaft expansion and/or contraction. Position bearing insert to obtain the required axial expansion in desired directions. It may be necessary to unload the bearing while moving the assembly.

Installation Instructions continued

Step 6: Tighten Setscrews

Setscrews in multiple bearing applications should be aligned as shown in Figure 1.

Tighten bearing units to the shaft as follows:

a) Torque the first setscrew to one half of the recommended torque in Table II.

b) Torque the second setscrew to the full recommended torque. Go back to the first setscrew and tighten to the full recommended torque.

If the bearing unit has two lock collars, repeat the same procedure for the second lock collar. Check shaft again for freedom of rotation and then tighten the second bearing unit in the same fashion. When all bearings are tightened, perform a final check to the shaft for freedom of rotation.

Figure 1

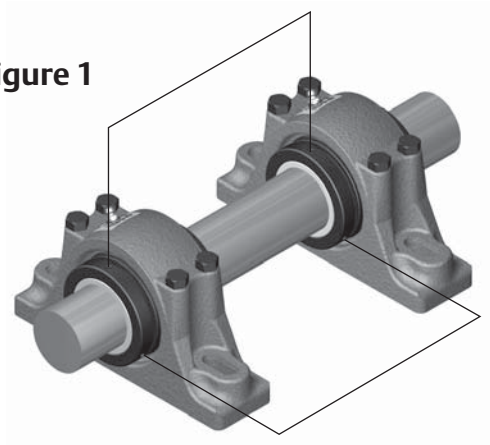

Table II

Lock Collar Setscrew Torque			
Bore Size		Hex Size	Foot-Pounds
inch	mm		
1 3/16 - 1 11/16	35 - 40	5/32	12
1 3/4 - 2 1/2	45 - 65	3/16	19
2 11/16 - 3 1/2	70 - 95	1/4	43
3 15/16 - 4	100 - 105	5/16	83
4 7/16 - 5	110 - 125	3/8	155

Replacing Existing Sealmaster Inserts:

Note: Replacement Sealmaster bearing inserts are intended for use in Sealmaster housings only.

Step 1: Remove Housing Cap Bolts

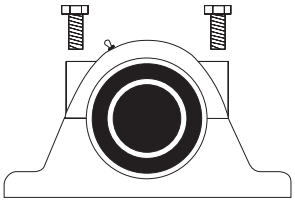

Step 2: Remove Top Half of Housing

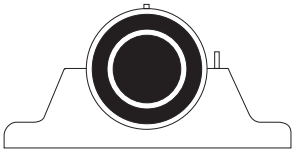

Step 3: Remove Bearing from Shaft

Loosen the setscrews and slide the bearing off the shaft.

Step 4: Inspect Shaft and Bore

Shaft should be within tolerance range shown in Table I, clean and free of nicks and burrs. Mount bearings on unused section of shafting or repair/replace shafting as required. Inspect both the shaft and bearing bore for debris or contaminants. Also be sure to inspect the housing for damages. Wipe housing bore clean as necessary and check that the lubrication hole is clean and free of debris.

Installation Instructions continued

Step 5: Load New Insert

Slide bearing onto shaft and seat the bearing in the housing base.

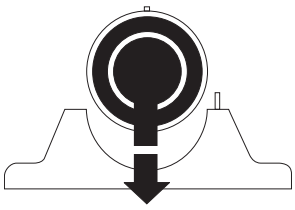

Step 6: Install Top Half of Housing

Check to assure that the rubber grommet is properly seated in the lube hole in the top half of the housing. Position the insert so that the lock pin lines up with the lock pin slot in the top half of the housing. Be sure that the lock pin is not positioned in the lube hole.

Be sure to check the bearing inserts for proper alignment. Align the bearings.

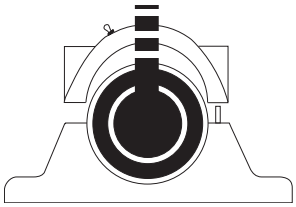

Install the top half of the housing. Tighten down the cap bolts to the recommended torque in Tables III, IV, V, or VI, based on the housing type. Rotate the shaft by hand to check for freedom of rotation.

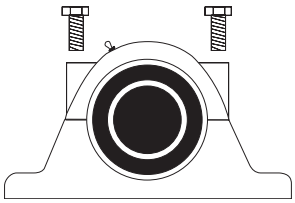

Step 7: Refer to Steps 5 and 6 from the Previous Installation Section

Table III

Pillow Block Housing		
Bore Size		Housing Cap Tightening Torque (Foot-Pounds)
inch	mm	
1 3/16 - 1 1/4	-	17
1 3/8 - 2 3/16	35 - 55	30
2 1/4 - 3	60 - 75	75
3 3/16 - 4 1/2	80 - 115	265
4 15/16 - 5	120 - 125	390

Table IV

Flange Bearing Housing		
Bore Size		Housing Cap Tightening Torque (Foot-Pounds)
inch	mm	
1 3/16 - 2	35 - 50	30
2 3/16 - 3	55 - 75	75
3 3/16 - 4	80 - 105	150

Table V

Piloted Flange Housing			
Bore Size		Outside Bolts Tightening Torque (Foot-Pounds)	Inside Bolts Tightening Torque (Foot-Pounds)
inch	mm		
1 3/16 - 2	35 - 50	17	4
2 3/16 - 3	55 - 75	50	8
3 3/16 - 4	80 - 105	75	17
4 7/16 - 5	110 - 125	150	75

Table VI

Expansion Pillow Block Housing		
Bore Size		Housing Cap Tightening Torque (Foot-Pounds)
inch	mm	
1 3/16 - 1 1/4	-	17
1 3/4 - 2 3/16	35 - 55	30
2 1/4 - 3	60 - 75	75
3 3/16 - 3 1/2	80 - 95	265
3 15/16 - 4 1/2	100 - 115	150
4 15/16 - 5	120 - 125	265

Sealmaster RPB Tapered Roller Bearing Lubrication:

Pre-Mounting Checklist:

All Sealmaster RPB Mounted Tapered Roller Bearings are delivered with a high quality lithium complex grease with an EP additive. The bearing is ready for use with no initial lubrication required. The grease consists of a lithium complex thickener, mineral oil, and NLGI grade 2 consistency.

Compatibility of grease is critical; therefore consult with Application Engineering and your grease supplier to insure greases are compatible. For best performance it is recommended to relubricate with lithium complex thickened grease with a comparable NLGI consistency and base oil properties.

Relubricatable Sealmaster bearings are supplied with grease fittings or zerks for ease of lubrication with hand or automatic grease guns. Always wipe the fitting and grease nozzle clean.

Caution: If possible, it is recommended to lubricate the bearing while rotating, until grease purge is observed from the seals. If this is not an option due to safety reasons, follow the alternate lubrication procedure below.

Alternate Lubrication Procedure:

Stop rotating equipment. Add one half the recommended amount shown in Table VII. Start the bearing and run for a few minutes. Stop the bearing and add the second half of the recommended amount. A temperature rise after lubrication, sometimes 30°F (17°C), is normal. Bearing should operate at temperatures less than 200°F (94°C) and should not exceed 250° (121°C) for intermittent operation. For lubrication guidelines, see Tables VIII.

Note: Table VIII are general recommendations. Experience and testing may be required for specific applications.

Note: Grease charges in Table VII are based on the use of lithium complex thickened grease with a NLGI grade 2 consistency.

Expansion Bearing Applications:

Before installation, make certain proper expansion is accounted for. Expansion units should be placed in a location where relative movement between the bearing insert and the housing can be tolerated. For most applications using expansion type units, the fixed unit (non-expansion unit) is placed at the drive end of the shaft. Use Table IX to review the total available bearing expansion. If the application requires additional expansion, consult Application Engineering.

Table VII

Grease Charge for Relubrication		
Bore Size		Grease Charge (Mass - Ounces)
inch	mm	
1 3/16 - 1 1/4	-	0.10
1 3/8 - 1 7/16	35	0.20
1 1/2 - 1 11/16	40	0.30
1 3/4 - 2	45 - 50	0.50
2 3/16	55	0.55
2 1/4 - 2 1/2	60 - 65	0.65
2 11/16 - 3	70 - 75	0.85
3 3/16 - 3 1/2	80 - 95	1.25
3 15/16 - 4	100 - 105	2.50
4 7/16 - 4 1/2	110 - 115	3.00
4 15/16 - 5	120 - 125	4.75

Table VIII

Relubrication Recommendations			
Environment	Temperature (°F)	Speed (% Catalog Max)	HI Suffix
Dirty	-20 to 250	0 - 100%	Daily to 1 Week
Clean	-20 to 125	0 - 25%	4 to 10 Months
		26 - 50%	1 to 4 Months
		51 - 75%	1 Week to 1 Month
		76 - 100%	Daily to 1 Week
	125 to 175	0 - 25%	2 to 6 Weeks
		26 - 50%	1 Week to 1 Month
		51 - 75%	Daily to 1 Week
		76 - 100%	
	175 to 250	0 - 100%	Daily to 1 Week

Table IX

Total Available Pillow Block Housing Expansion			
Bore Size		Expansion	
inch	mm	inch	mm
1 3/16 - 2 3/16	35 - 55	3/16	4.76
2 1/4 - 2 1/2	60 - 65	1/4	6.35
2 11/16 - 3 1/2	70 - 95	5/16	7.94
3 15/16 - 5	100 - 125	3/8	9.53

Browning E920 Tapered Roller Bearing Installation

Mounting Lock Collar Units:

NOTICE

• Do not strike or hammer on any component of the bearing and/or shaft. Impact can result in damage to the bearing that may cause reduction in bearing performance and may lead to equipment failure.

Step 1: Inspect Shaft and Bore

Shaft should be within tolerance range shown in Table I, clean and free of nicks and burrs. Mount bearings on unused section of shafting or repair/replace shafting as required. Inspect both the shaft and bearing bore for debris or contaminants. Wipe clean as necessary.

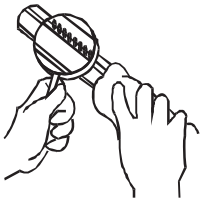

Table I

Recommended Shaft Tolerances	
Nominal Bore Diameter	Tolerance (inch)
1 3/16 - 2	+0.000 / -0.0005
2 3/16 - 4	+0.000 / -0.001
4 7/16 - 5	+0.000 / -0.0015

Step 2: Check Support Surfaces

Make sure the base of the housing and the support surfaces are clean and free from burrs. If the housing elevation is adjusted with shims these must cover the entire contact area between the housing and the support surface.

Step 3: Install Unit

To aid installation, keep weight off bearing during mounting. Slide unit onto shaft by pushing on the inner ring. If it is difficult to mount bearing on shaft, use a piece of emery cloth to reduce any high spots on the shaft.

Step 4: Fasten Unit in Place

Install housing mounting bolts and check bearing alignment. Align the bearing units as closely as possible.
Tighten mounting bolts to recommended fastener torques. Check the shaft for freedom of rotation by rotating shaft with hand in both directions.

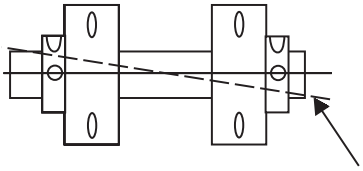

Step 5: Tighten Setscrews

Setscrews in multiple bearing applications should be aligned as shown in Figure 1. Tighten bearing units to the shaft as follows:

a) Torque the first setscrew to one half of the recommended torque in Table II.
b) Torque the second setscrew to the full recommended torque. Go back to the first setscrew and tighten to the full recommended torque.

Repeat the same procedure for the second lock collar. Check shaft again for freedom of rotation and then tighten the second bearing unit in the same fashion. When all bearings are tightened, perform a final check to the shaft for freedom of rotation.

Figure 1

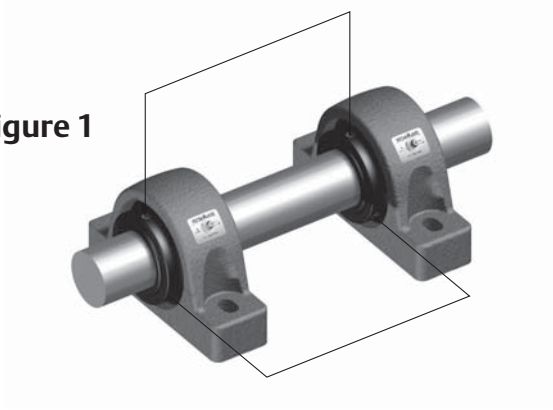

Table II

Lock Collar Setscrew Torque	
Bore Size	Foot-Pounds
1 3/16 - 1 11/16	12
1 3/4 - 2 1/2	19
2 11/16 - 3 1/2	45
3 15/16 - 4	95
4 7/16 - 5	150

Browning E920 Tapered Roller Bearing Lubrication:

Pre-Mounting Checklist:

All Browning E920 Tapered Roller Bearings are delivered with a high quality lithium grease with an EP additive. The bearing is ready for use with no initial lubrication required. The grease consists of a lithium thickener, mineral oil, and NLGI grade 2 consistency.

Compatibility of grease is critical; therefore consult with Application Engineering and your grease supplier to insure greases are compatible. For best performance it is recommended to relubricate with lithium thickened grease with a comparable NLGI consistency and base oil properties.

Relubricatable Browning bearings are supplied with grease fittings or zerks for ease of lubrication with hand or automatic grease guns. Always wipe the fitting and grease nozzle clean.

CAUTION: If possible, it is recommended to lubricate the bearing while rotating, until grease purge is observed from the seals. If this is not an option due to safety reasons, follow the alternate lubrication procedure below.

Alternate Lubrication Procedure:

Stop rotating equipment. Add one half of the recommended amount shown in Table III. Start the bearing and run for a few minutes. Stop the bearing and add the second half of the recommended amount. A temperature rise after lubrication, sometimes 30°F (17°C), is normal. Bearing should operate at temperatures less than 200°F (94°C) and should not exceed 250° (121°C) for intermittent operation. For lubrication guidelines, see Table IV.

Note: Table IV are general recommendations. Experience and testing may be required for specific applications.

Note: Grease charges in Table III are based on the use of lithium thickened grease with a NLGI grade 2 consistency.

Table III

Grease Charge for Relubrication	
Bore Size	**Grease Charge (Mass - Ounces)**
1 3/16 - 1 1/4	0.26
1 3/8 - 1 7/16	0.30
1 1/2 - 1 11/16	0.36
1 3/4 - 2	0.42
2 3/16	0.69
2 1/4 - 2 1/2	0.75
2 11/16 - 3	0.92
3 3/16 - 3 1/2	1.50
3 15/16 - 4	1.92
4 7/16 - 4 1/2	2.79
4 15/16 - 5	4.17

Table IV

Relubrication Recommendations			
Environment	**Temperature (°F)**	**Speed (% Catalog Max)**	**Frequency**
Dirty	-20 to 250	0 - 100%	Daily to 1 Week
Clean	-20 to 125	0 - 25%	4 to 10 Months
		26 - 50%	1 to 4 Months
		51 - 75%	1 Week to 1 Month
		76 - 100%	Daily to 1 Week
	125 to 175	0 - 25%	2 to 6 Weeks
		26 - 50%	1 Week to 1 Month
		51 - 75%	Daily to 1 Week
		76 - 100%	
	175 to 250	0 - 100%	Daily to 1 Week

Table V

Maximum Operational Speed	
Bore Size	**Speed (RPM)**
1 3/16 - 1 1/4	3500
1 3/8 - 1 7/16	3000
1 1/2 - 1 11/16	2500
1 3/4 - 2 3/16	2000
2 1/4 - 2 1/2	1750
2 11/16 - 3	1500
3 3/16 - 4	1000
4 7/16 - 5	750

Sealmaster USRB Spherical Roller Bearing Installation

Mounting Lock Collar Units:

NOTICE

• These bearings are designed for maximum permissible misalignment of ± 2 degrees. Installation, handling or operation of the bearing in excess of the maximum of ± 2 degrees can cause reduction in bearing performance and may lead to equipment failure.

• Do not strike or hammer on any component of the bearing and/or shaft. Impact can result in damage to the bearing that may cause reduction in bearing performance and may lead to equipment failure.

Step 1: Inspect Shaft and Bore

Shaft should be within tolerance range shown in Table I, clean and free of nicks and burrs. Mount bearings on unused section of shafting or repair/replace shafting as required. Inspect both the shaft and bearing bore for debris or contaminants. Wipe clean as necessary.

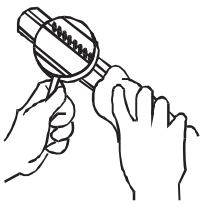

Table I

Recommended Shaft Tolerances	
Nominal Bore Diameter	Tolerance (inch)
1 1/8 - 2	+0.000 / -0.0005
2 3/16 - 4	+0.000 / -0.001
4 7/16 - 5	+0.000 / -0.0015

Step 2: Check Support Surfaces

Make sure the base of the housing and the support surfaces are clean and free from burrs. If the housing elevation is adjusted with shims these must cover the entire contact area between the housing and the support surface.

Step 3: Install Unit

To aid installation, keep weight off bearing during mounting. Slide unit onto shaft by pushing on the inner ring. If it is difficult to mount bearing on shaft, use a piece of emery cloth to reduce any high spots on the shaft.

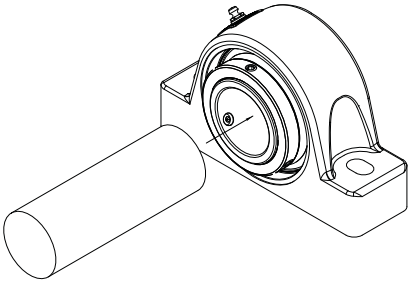

Step 4: Fasten Unit in Place

Install housing mounting bolts and check bearing alignment. Align the bearing units as closely as possible.

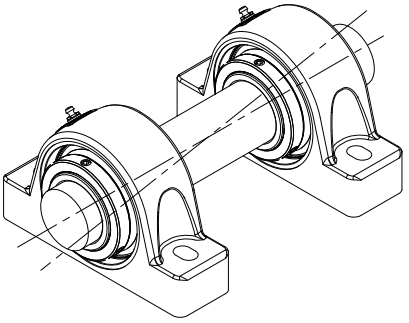

Tighten mounting bolts to recommended fastener torques. Check the shaft for freedom of rotation by rotating shaft with hand in both directions.

Step 5: Position Insert

If expansion units are used, the insert must be located in the housing to allow for axial shaft expansion and/or contraction. Position bearing insert to obtain the required axial expansion in desired directions. It may be necessary to unload the bearing while moving the assembly.

Installation Instructions continued

Step 6: Tighten Setscrews

Setscrews in multiple bearing applications should be aligned as shown in Figure 1. Tighten bearing units to the shaft as follows:

a) Torque the first setscrew to one half of the recommended torque in Table II.
b) Torque the second setscrew to the full recommended torque. Go back to the first setscrew and tighten to the full recommended torque.

Figure 1

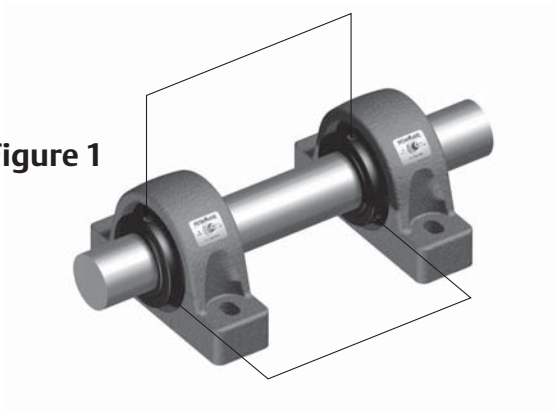

Table II

Lock Collar Setscrew Torque		
Bore Size	Hex Size	Foot-Pounds
1 1/8 - 1 3/4	5/32	14
1 15/16 - 2 1/2	3/16	25
2 11/16 - 3 1/2	1/4	55
3 11/16 - 4 1/2	5/16	120
4 15/16	3/8	180

If the bearing unit has two lock collars, repeat the same procedure for the second lock collar. Check shaft again for freedom of rotation and then tighten the second bearing unit in the same fashion. When all bearings are tightened, perform a final check to the shaft for freedom of rotation.

Mounting Adapter Lock Units:

Step 1: Inspect Shaft and Bore

Shaft should be within tolerance range shown in Table I, clean and free of nicks and burrs. Mount bearings on unused section of shafting or repair/replace shafting as required. Inspect both the shaft and bearing bore for debris or contaminants. Wipe clean as necessary.

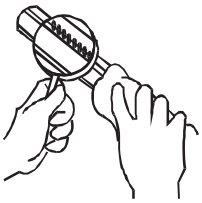

NOTICE: Do not apply any additional lubricant (ex. Grease, oil, or anti-seize) to bearing tapered surfaces, bore or shafting. Bearing components have a light oil, rust preventative coating that should not be removed. Application of additional lubricant may cause reduction in bearing performance and may lead to equipment failure.

Table III

Recommended Shaft Tolerances (Adapter Lock)	
Nominal Bore Diameter	Tolerance (inch)
1 1/8 - 2	+0.000 / -0.003
2 3/16 - 4	+0.000 / -0.004
4 7/16 - 5	+0.000 / -0.005

Step 2: Check Support Surfaces

Make sure the base of the housing and the support surfaces are clean and free from burrs. If the housing elevation is adjusted with shims these must cover the entire contact area between the housing and the support surface.

Step 3: Install Unit

NOTICE: One expansion unit is to be used in conjunction with one non-expansion unit for applications using adapter lock units. Failure to utilize one expansion and one non-expansion unit is likely to result in reduced bearing performance.

To aid installation, keep weight off bearing during mounting. Slide unit onto shaft by pushing on the inner ring. If it is difficult to mount bearing on shaft, use a piece of emery cloth to reduce any high spots on the shaft.

Installation Instructions continued

Step 4: Fasten Unit in Place

Install housing mounting bolts and check bearing alignment. Align the bearing units as closely as possible.

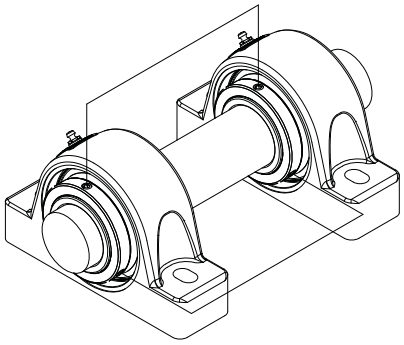

Tighten mounting bolts to recommended fastener torques. Check the shaft for freedom of rotation by rotating shaft with hand in both directions.

Step 5: Position Insert

Expansion inserts must be located in the housing to allow for axial shaft expansion and/or contraction. If the direction of shaft expansion or contraction is in the direction shown in Figure 2, locate the bearing insert as shown. If the direction of shaft expansion or contraction is opposite to that shown in Figure 2, center the insert in the housing.

Figure 2

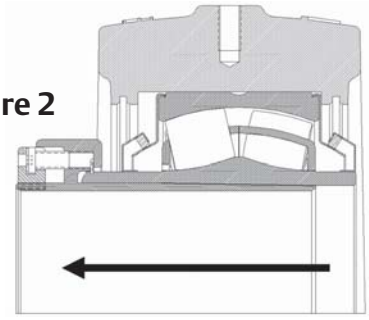

Step 6: Tighten Cap Screws

Tighten bearing units to the shaft as follows:

a) Tighten the cap screws in the specified order, as shown in Figure 3. Continue tightening until all cap screws have become snug.
b) Using a torque wrench, tighten each cap screw in the specified order to one half of the recommended torque in Table IV.
c) In the same order, repeat the procedure tightening each cap screw to the full recommended torque. Once complete, follow the same pattern and verify that each cap screw has met the full recommended torque value and all cap screws have achieved equivalent resistance.

Check shaft for freedom of rotation and then tighten the second bearing unit in the same fashion. When all bearings are tightened, perform a final check to the shaft for freedom of rotation.

Figure 3

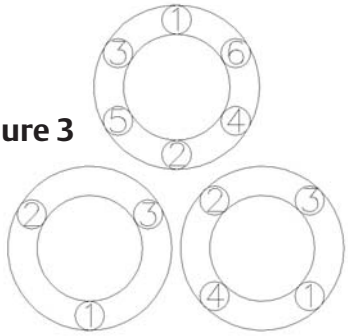

Table IV

Adapter Lock Cap Screw Information			
Bore Size	Torque (inch - Pounds)	Hex Size	# Cap Screws
1 1/8 - 1 1/2	45	1/8	3
1 11/16 - 1 3/4	40	1/8	3
1 15/16 - 2	30	1/8	3
2 3/16	45	1/8	3
2 7/16 - 2 1/2	60	1/8	4
2 11/16 - 3	55	1/8	4
3 3/16 - 3 1/2	80	3/16	4
3 11/16 - 4	80	3/16	4
4 7/16 - 4 1/2	115	3/16	4
4 15/16 - 5	130	3/16	6

Installation Instructions continued

Replacing Existing Sealmaster Inserts:

Step 1: Loosen and Remove Housing Mounting Bolts

Step 2: Remove Bearing from Shaft
For lock collar units, loosen the setscrews. For adapter lock units, loosen the cap screws in the specified order as shown in Figure 3. Once locking mechanism is loosened, slide the bearing off the shaft.

Step 3: Remove the Bearing Insert from the Housing
Carefully remove retaining ring and spacer (non-expansion units) from the housing bore. Clean rings before reuse. Remove insert from housing.

Step 4: Inspect and Prepare Housing
Housings should be inspected for damage prior to installation. Wipe housing bore clean as necessary and check that the lubrication hole is clean and free of debris. Wetting of the housing bore with oil or grease may be done to ease installation of bearing insert.

Step 5: Load New Insert
Slide the bearing insert into the housing.

Step 6: Secure Bearing in Housing
Replace the spacer into housing (non-expansion units only). Install retaining rings into the grooves in the housing bore.

Step 7: Refer to Steps 1 - 6 from the Previous Installation Sections for the Respective Locking Mechanism

Sealmaster USRB Spherical Roller Bearing Lubrication:

Pre-Mounting Checklist:

All Sealmaster Spherical Roller Bearings are delivered with a high quality lithium complex grease with an EP additive. The bearing is ready for use with no initial lubrication required. The grease consists of a lithium complex thickener, mineral oil, and NLGI grade 2 consistency.

Compatibility of grease is critical; therefore consult with Application Engineering and your grease supplier to insure greases are compatible. For best performance it is recommended to relubricate with lithium complex thickened grease with a comparable NLGI consistency and base oil properties.

Relubricatable Sealmaster bearings are supplied with grease fittings or zerks for ease of lubrication with hand or automatic grease guns. Always wipe the fitting and grease nozzle clean.

Caution: If possible, it is recommended to lubricate the bearing while rotating, until grease purge is observed from the seals. If this is not an option due to safety reasons, follow the alternate lubrication procedure below.

Installation Instructions continued

Alternate Lubrication Procedure:

Stop rotating equipment. Add one half the recommended amount shown in Table V. Start the bearing and run for a few minutes. Stop the bearing and add the second half of the recommended amount. A temperature rise after lubrication, sometimes 30°F (17°C), is normal. Bearing should operate at temperatures less than 200°F (94°C) and should not exceed 250° (121°C) for intermittent operation. For lubrication guidelines, see Table VI.

Note: Table VI are general recommendations. Experience and testing may be required for specific applications.

Note: Grease charges in Table V are based on the use of lithium complex thickened grease with a NLGI grade 2 consistency.

Expansion Bearing Applications:

Before installation, make certain proper expansion is accounted for. Expansion units should be placed in a location where relative movement between the bearing insert and the housing can be tolerated. For most applications using expansion type units, the fixed unit (non-expansion unit) is placed at the drive end of the shaft. Use Table VIII to review the total available bearing expansion. If the application requires additional expansion, consult Application Engineering.

NOTICE: One expansion unit is to be used in conjunction with one non-expansion unit for applications using adapter lock units. Failure to utilize one expansion and one non-expansion unit is likely to result in reduced bearing performance.

Table V

Grease Charge for Relubrication	
Bore Size	**Grease Charge (Mass - Ounces)**
1 1/8 - 1 1/2	0.20
1 11/16 - 1 3/4	0.20
1 15/16 - 2	0.25
2 3/16	0.40
2 7/16 - 2 1/2	0.60
2 11/16 - 3	0.75
3 3/16 - 3 1/2	1.25
3 11/16 - 4	2.00
4 7/16 - 4 1/2	2.75
4 15/16 - 5	4.00

Table VI

Relubrication Recommendations			
Environment	**Temperature (°F)**	**Speed (% Catalog Max)**	**Frequency**
Dirty	-20 to 250	0 - 100%	Daily to 1 Week
Clean	-20 to 125	0 - 25%	4 to 10 Months
		26 - 50%	1 to 4 Months
		51 - 75%	1 Week to 1 Month
		76 - 100%	Daily to 1 Week
	125 to 175	0 - 25%	2 to 6 Weeks
		26 - 50%	1 Week to 1 Month
		51 - 75%	Daily to 1 Week
		76 - 100%	
	175 to 250	0 - 100%	Daily to 1 Week

Table VII

Maximum Operational Speed		
Bore Size	**Felt Seal (RPM)**	**Contact Seal (RPM)**
1 1/8 - 1 1/2	4000	3000
1 11/16 - 1 3/4	4000	2750
1 15/16 - 2	4000	2500
2 3/16	3750	2200
2 7/16 - 2 1/2	3250	1750
2 11/16 - 3	3000	1600
3 3/16 - 3 1/2	2500	1350
3 11/16 - 4	2250	1200
4 7/16 - 4 1/2	2000	1100
4 15/16 - 5	1750	900

Table VIII

Total Available Housing Expansion (inch)		
Bore Size	**Setscrew**	**Adapter Lock**
1 1/8 - 1 1/2	3/16	5/32
1 11/16 - 3 1/2	1/4	7/32
3 11/16 - 4	5/16	1/4
4 7/16 - 5	3/8	9/32

Sealmaster USRB Spherical Roller Bearing Split Pillow Block Housing Installation

Mounting Lock Collar Units:

NOTICE

• These bearings are designed for maximum permissible misalignment of ± 2 degrees. Installation, handling or operation of the bearing in excess of the maximum of ± 2 degrees can cause reduction in bearing performance and may lead to equipment failure.

• Do not strike or hammer on any component of the bearing and/or shaft. Impact can result in damage to the bearing that may cause reduction in bearing performance and may lead to equipment failure.

Step 1: Inspect Shaft and Bore

Shaft should be within tolerance range shown in Table I, clean and free of nicks and burrs. Mount bearings on unused section of shafting or repair/replace shafting as required. Inspect both the shaft and bearing bore for debris or contaminants. Wipe clean as necessary.

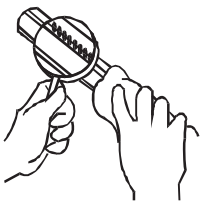

Table I

Recommended Shaft Tolerances	
Nominal Bore Diameter	Tolerance (inch)
1 7/16 - 2	+0.0000 / -0.0005
2 7/16 - 4	+0.000 / -0.001
4 7/16 - 5 15/16	+0.0000 / -0.0015
6 7/16 - 7	+0.000 / -0.002

Step 2: Check Support Surfaces

Make sure the base of the housing and the support surfaces are clean and free from burrs. If the housing elevation is adjusted with shims these must cover the entire contact area between the housing and the support surface.

Step 3: Install Unit

To aid installation, keep weight off bearing during mounting. Slide unit onto shaft by pushing on the inner ring. If it is difficult to mount bearing on shaft, use a piece of emery cloth to reduce any high spots on the shaft.

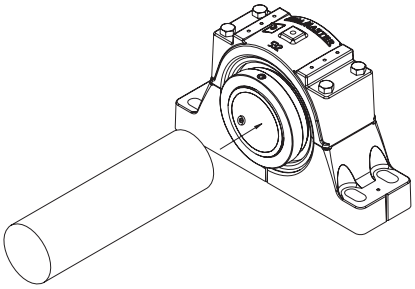

Step 4: Fasten Unit in Place

Install housing mounting bolts and check bearing alignment. Align the bearing units as closely as possible.

Tighten mounting bolts to recommended fastener torques. Check the shaft for freedom of rotation by rotating shaft with hand in both directions.

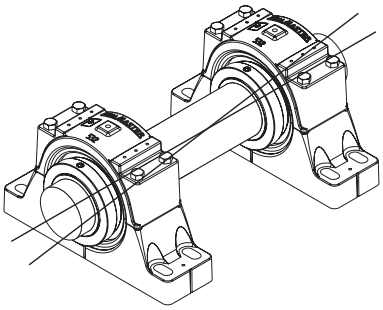

Step 5: Position Insert

Expansion units must be located in the housing to allow for axial shaft expansion and/or contraction. Position bearing insert to obtain the required axial expansion in desired directions. It may be necessary to unload the bearing while moving the assembly.

Installation Instructions continued

Step 6: Tighten Setscrews

Setscrews in multiple bearing applications should be aligned as shown in Figure 1. Tighten bearing units to the shaft as follows:

a) Torque the first setscrew to one half of the recommended torque in Table II.
b) Torque the second setscrew to the full recommended torque. Go back to the first setscrew and tighten to the full recommended torque.

If the bearing unit has two lock collars, repeat the same procedure for the second lock collar. Check shaft again for freedom of rotation and then tighten the second bearing unit in the same fashion. When all bearings are tightened, perform a final check to the shaft for freedom of rotation.

Figure 1

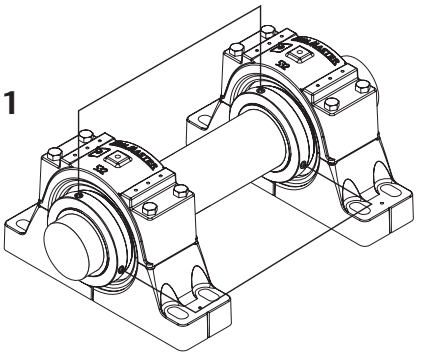

Table II

Lock Collar Setscrew Torque		
Bore Size	Hex Size	Foot-Pounds
1 7/16 - 1 3/4	5/32	14
1 15/16 - 2 1/2	3/16	25
2 15/16 - 3 1/2	1/4	55
3 15/16 - 4 1/2	5/16	120
4 15/16 - 5 15/16	3/8	180
6 7/16 - 7	1/2	428

Mounting Adapter Lock Units:

Step 1: Inspect Shaft and Bore

Shaft should be within tolerance range shown in Table III, clean and free of nicks and burrs. Mount bearings on unused section of shafting or repair/replace shafting as required. Inspect both the shaft and bearing bore for debris or contaminants. Wipe clean as necessary.

NOTICE: Do not apply any additional lubricant (ex. Grease, oil, or anti-seize) to bearing tapered surfaces, bore or shafting. Bearing components have a light oil, rust preventative coating that should not be removed. Application of additional lubricant may cause reduction in bearing performance and may lead to equipment failure.

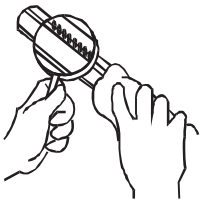

Table III

Recommended Shaft Tolerances	
Nominal Bore Diameter	Tolerance (inch)
1 7/16 - 2	+0.000 / -0.003
2 7/16 - 4	+0.000 / -0.004
4 7/16 - 5 15/16	+0.000 / -0.005
6 7/16 - 8	+0.000 / -0.006

Step 2: Check Support Surfaces

Make sure the base of the housing and the support surfaces are clean and free from burrs. If the housing elevation is adjusted with shims these must cover the entire contact area between the housing and the support surface.

Step 3: Install Unit

NOTICE: One expansion unit is to be used in conjunction with one non-expansion unit for applications using adapter lock units. Failure to utilize one expansion and one non-expansion unit is likely to result in reduced bearing performance.

Installation Instructions continued

To aid installation, keep weight off bearing during mounting. Slide unit onto shaft by pushing on the inner ring. If it is difficult to mount bearing on shaft, use a piece of emery cloth to reduce any high spots on the shaft.

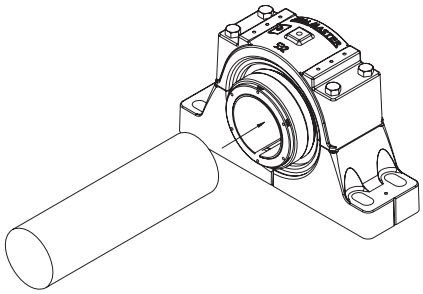

Step 4: Fasten Unit in Place

Install housing mounting bolts and check bearing alignment. Align the bearing units as closely as possible.

Tighten mounting bolts to recommended fastener torques. Check the shaft for freedom of rotation by rotating shaft with hand in both directions.

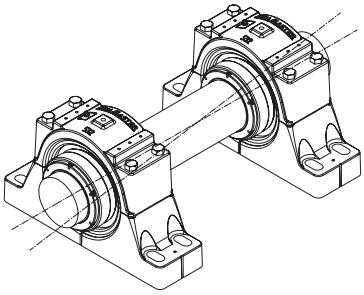

Step 5: Position Insert

Expansion inserts must be located in the housing to allow for axial shaft expansion and/or contraction. If the direction of shaft expansion or contraction is in the direction shown in Figure 2, locate the bearing insert as shown. If the direction of shaft expansion or contraction is opposite to that shown in Figure 2, center the insert in the housing.

Figure 2

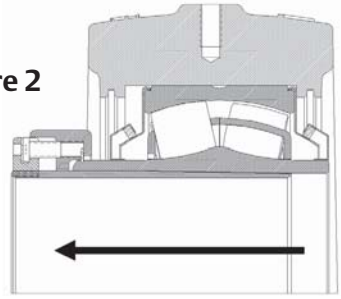

Step 6: Tighten Cap Screws

Tighten bearing units to the shaft as follows:

a) Tighten the cap screws in the specified order, as shown in Figure 3. Continue tightening until all cap screws have become snug.
b) Using a torque wrench, tighten each cap screw in the specified order to one half of the recommended torque in Table IV.
c) In the same order, repeat the procedure tightening each cap screw to the full recommended torque. Once complete, follow the same pattern and verify that each cap screw has met the full recommended torque value and all cap screws have achieved equivalent resistance.

Check shaft for freedom of rotation and then tighten the second bearing unit in the same fashion. When all bearings are tightened, perform a final check to the shaft for freedom of rotation.

Figure 3

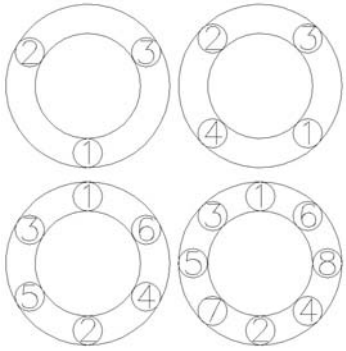

Table IV

Adapter Lock Cap Screw Information			
Bore Size	Torque (inch - Pounds)	Hex Size	# Cap Screws
1 7/16 - 1 1/2	45	1/8	3
1 15/16 - 2	30	1/8	3
2 7/16 - 2 1/2	60	1/8	4
2 15/16 - 3	55	1/8	4
3 7/16 - 3 1/2	80	3/16	4
3 15/16 - 4	80	3/16	4
4 7/16 - 4 1/2	115	3/16	4
4 15/16 - 5	130	3/16	6
5 7/16 - 5 1/2	115	3/16	6
5 15/16	175	3/16	8
6 7/16 - 7	225	1/4	8
7 1/2 - 8	275	1/4	8

Installation Instructions continued

Replacing Existing Sealmaster Inserts:

Step 1: Remove Housing Cap Bolts

Step 2: Remove Top Half of Housing

Step 3: Remove Bearing from Shaft

For lock collar units, loosen the setscrews. For adapter lock units, loosen the cap screws in the specified order as shown in Figure 3. Once locking mechanism is loosened, slide the bearing off the shaft.

Step 4: Inspect Shaft and Bore

Shaft should be within tolerance range shown in Table III, clean and free of nicks and burrs. Mount bearings on unused section of shafting or repair/replace shafting as required. Inspect both the shaft and bearing bore for debris or contaminants. Also be sure to inspect the housing for damages. Wipe housing bore clean as necessary and check that the lubrication hole is clean and free of debris.

Step 5: Load New Insert

Slide bearing onto shaft and seat the bearing in the housing base.

Step 6: Install Top Half of Housing

Be sure to check the bearing inserts for proper alignment. Align the bearings.

Install the top half of the housing. Tighten down the cap bolts to the recommended torque in Tables V. Rotate the shaft by hand to check for freedom of rotation.

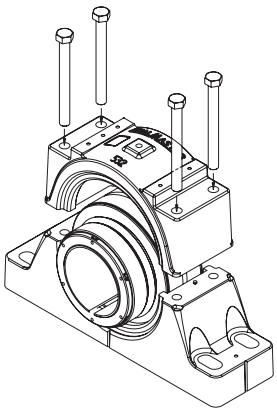

Table V

Cap Bolt Tightening Torque		
Casting	Bore Size	Foot-Pounds
509	1 7/16 - 1 1/2	31
511	1 15/16 - 2	31
515	2 7/16 - 2 1/2	75
517	2 15/16 - 3	75
520	3 7/16 - 3 1/2	109
522	3 15/16 - 4	150
526	4 7/16 - 4 1/2	150
528	4 15/16 - 5	266
532	5 7/16 - 5 1/2	266
534	5 15/16	266
536	6 7/16 - 6 1/2	266
538	6 15/16 - 7	600
544	7 1/2 - 8	600

Step 7: Refer to Steps 5 and 6 from the Previous Installation Sections for the Respective Locking Mechanism

Sealmaster USRB Spherical Roller Bearing Split Pillow Block Housing Lubrication:

Pre-Mounting Checklist:

Lubrication:

All Sealmaster Spherical Roller Bearings are delivered with a high quality lithium complex grease with an EP additive. The bearing is ready for use with no initial lubrication required. The grease consists of a lithium complex thickener, mineral oil, and NLGI grade 2 consistency.

Compatibility of grease is critical; therefore consult with Application Engineering and your grease supplier to insure greases are compatible. For best performance it is recommended to relubricate with lithium complex thickened grease with a comparable NLGI consistency and base oil properties.

Relubricatable Sealmaster bearings are supplied with

Installation Instructions continued

grease fittings or zerks for ease of lubrication with hand or automatic grease guns. Always wipe the fitting and grease nozzle clean.

Caution: If possible, it is recommended to lubricate the bearing while rotating, until grease purge is observed from the seals. If this is not an option due to safety reasons, follow the alternate lubrication procedure below.

Alternate Lubrication Procedure:

Stop rotating equipment. Add one half the recommended amount shown in Table VI. Start the bearing and run for a few minutes. Stop the bearing and add the second half of the recommended amount. A temperature rise after lubrication, sometimes 30°F (17°C), is normal. Bearing should operate at temperatures less than 200°F (94°C) and should not exceed 250° (121°C) for intermittent operation. For lubrication guidelines, see Table VII.

Note: Table VII are general recommendations. Experience and testing may be required for specific applications.

Note: Grease charges in Table VI are based on the use of lithium complex thickened grease with a NLGI grade 2 consistency.

Expansion Bearing Applications:

Before installation, make certain proper expansion is accounted for. Expansion units should be placed in a location where relative movement between the bearing insert and the housing can be tolerated. For most applications using expansion type units, the fixed unit (non-expansion unit) is placed at the drive end of the shaft. Use Table IX to review the total available bearing expansion. If the application requires additional expansion, consult Application Engineering.

NOTICE: One expansion unit is to be used in conjunction with one non-expansion unit for applications using adapter lock units. Failure to utilize one expansion and one non-expansion unit is likely to result in reduced bearing performance.

Table VI

Grease Charge for Relubrication	
Bore Size	Grease Charge (Mass - Ounces)
1 7/16 - 1 1/2	0.20
1 15/16 - 2	0.30
2 7/16 - 2 1/2	0.60
2 15/16 - 3	0.80
3 7/16 - 3 1/2	1.20
3 15/16 - 4	2.00
4 7/16 - 4 1/2	2.75
4 15/16 - 5	4.00
5 7/16 - 5 1/2	6.10
5 15/16	10.60
6 7/16 - 7	13.90
7 1/2 - 8	17.60

Table VII

Relubrication Recommendations			
Environment	Temperature (°F)	Speed (% Catalog Max)	HI Suffix
Dirty	-20 to 250	0 - 100%	Daily to 1 Week
Clean	-20 to 125	0 - 25%	4 to 10 Months
		26 - 50%	1 to 4 Months
		51 - 75%	1 Week to 1 Month
		76 - 100%	Daily to 1 Week
	125 to 175	0 - 25%	2 to 6 Weeks
		26 - 50%	1 Week to 1 Month
		51 - 75%	Daily to 1 Week
		76 - 100%	
	175 to 250	0 - 100%	Daily to 1 Week

Table VIII

Maximum Operational Speed		
Bore Size	Felt Seal (RPM)	Contact Seal (RPM)
1 7/16 - 1 1/2	4000	3000
1 15/16 - 2	4000	2500
2 7/16 - 2 1/2	3250	1750
2 15/16 - 3	3000	1600
3 7/16 - 3 1/2	2500	1350
3 15/16 - 4	2250	1200
4 7/16 - 4 1/2	2000	1100
4 15/16 - 5	1750	900
5 7/16 - 5 1/2	1500	900
5 15/16	1300	800
6 7/16 - 7	1200	750
7 1/2 - 8	1100	750

Table IX

Total Available Housing Expansion (inch)			
Casting	Bore Size	Setscrew	Adapter Lock
509	1 7/16 - 1 1/2	7/32	3/16
511	1 15/16 - 2	1/4	7/32
515	2 7/16 - 2 1/2	5/16	9/32
517	2 15/16 - 3	3/8	11/32
520	3 7/16 - 3 1/2	3/8	11/32
522	3 15/16 - 4	3/8	5/16
526	4 7/16 - 4 1/2	3/8	9/32
528	4 15/16 - 5	3/8	9/32
532	5 7/16 - 5 1/2	3/8	9/32
534	5 15/16	3/8	9/32
536	6 7/16 - 6 1/2	3/8	9/32
538	6 15/16 - 7	3/8	9/32
544	7 1/2 - 8	3/8	9/32

Vibration Analysis

The following equations are used to calculate the fundamental frequencies for Mounted Tapered Roller Bearings.

1. All information can be linked to three factors:
   - Shaft Size
   - Unit number
   - Insert number
2. Use the information from Step 1 to select the vibration geometry information (R, I, O and F) from the Table 9.
3. Use the information to calculate the fundamental bearing frequencies:
   - Roller Spin Frequency (Hz) = R x RPM
   - Inner Roller Pass Frequency (Hz) = I x RPM
   - Outer Roller Pass Frequency (Hz) = O x RPM
   - Fundamental Train Frequency (Hz) = F x RPM

Bearing Symbols for Vibration Analysis

RPM = Shaft Speed (Revolutions per Minute)
R = Roller Spin Frequency Factor
I = Inner Roller Pass Frequency Factor
O = Outer Roller Pass Frequency Factor
F = Fundamental Train Frequency Factor

Table 9 - Sealmaster RPB and Browning E920 Vibration Geometry Information

Bore Size		Factor for Roller Spin	Factor for Inner Roller Pass	Factor for Outer Roller Pass	Factor for F.T.F.
inch	mm	R	I	O	F
1 3/16 - 1 1/4	-	0.1258	0.1782	0.1384	0.0073
1 3/8 - 1 7/16	35	0.1173	0.1892	0.1442	0.0072
1 1/2 - 1 11/16	40	0.1132	0.1710	0.1290	0.0072
1 3/4 - 2	45 - 50	0.1083	0.1626	0.1207	0.0071
2 3/16	55	0.1216	0.1792	0.1375	0.0072
2 1/4 - 2 1/2	60 - 65	0.1345	0.1958	0.1542	0.0073
2 11/16 - 3	70 - 75	0.1578	0.2202	0.1798	0.0075
3 3/16 - 3 1/2	80 - 95	0.1706	0.2368	0.1966	0.0076
3 15/16 - 4	100 - 105	0.1645	0.2376	0.1958	0.0075
4 7/16 - 4 1/2	110 - 115	0.1601	0.2289	0.1878	0.0075
4 15/16 - 5	120 - 125	0.1587	0.2292	0.1875	0.0075

Vibration Analysis

The following equations are used to calculate the fundamental frequencies for Mounted Spherical Roller Bearings.

1. All information can be linked to three factors:
   - Shaft Size
   - Unit number
   - Insert number
2. Use the information from Step 1 to select the vibration geometry information (R, I, O and F) from Table 10.
3. Use the information to calculate the fundamental bearing frequencies:
   - Roller Spin Frequency (Hz) = R x RPM
   - Inner Roller Pass Frequency (Hz) = I x RPM
   - Outer Roller Pass Frequency (Hz) = O x RPM
   - Fundamental Train Frequency (Hz) = F x RPM

Bearing Symbols for Vibration Analysis

RPM = Shaft Speed (Revolutions per Minute)
R = Roller Spin Frequency Factor
I = Inner Roller Pass Frequency Factor
O = Outer Roller Pass Frequency Factor
F = Fundamental Train Frequency Factor

Table 10 - USRB Vibration Geometry Information

Bore Size	Factor for Roller Spin	Factor for Inner Roller Pass	Factor for Outer Roller Pass	Factor for F.T.F.
	R	I	O	F
1 1/8 - 1 1/2	0.0977	0.1549	0.1117	0.0070
1 11/16 - 1 3/4	0.1077	0.1722	0.1278	0.0071
1 15/16 - 2	0.1151	0.1804	0.1363	0.0072
2 3/16	0.1106	0.1717	0.1283	0.0071
2 7/16 - 2 1/2	0.1105	0.1812	0.1354	0.0071
2 11/16 - 3	0.1204	0.1983	0.1517	0.0072
3 3/16 - 3 1/2	0.1205	0.1889	0.1444	0.0072
3 11/16 - 4	0.1088	0.1816	0.1351	0.0071
4 7/16 - 4 1/2	0.1138	0.1806	0.1360	0.0072
4 15/16 - 5	0.1171	0.1894	0.1439	0.0072
5 7/16 - 5 1/2	0.1037	0.1730	0.1270	0.0071
5 15/16	0.1009	0.1735	0.1265	0.0070
6 7/16 - 7	0.1020	0.1733	0.1267	0.0070
7 1/2 - 8	0.1115	0.1809	0.1357	0.0071

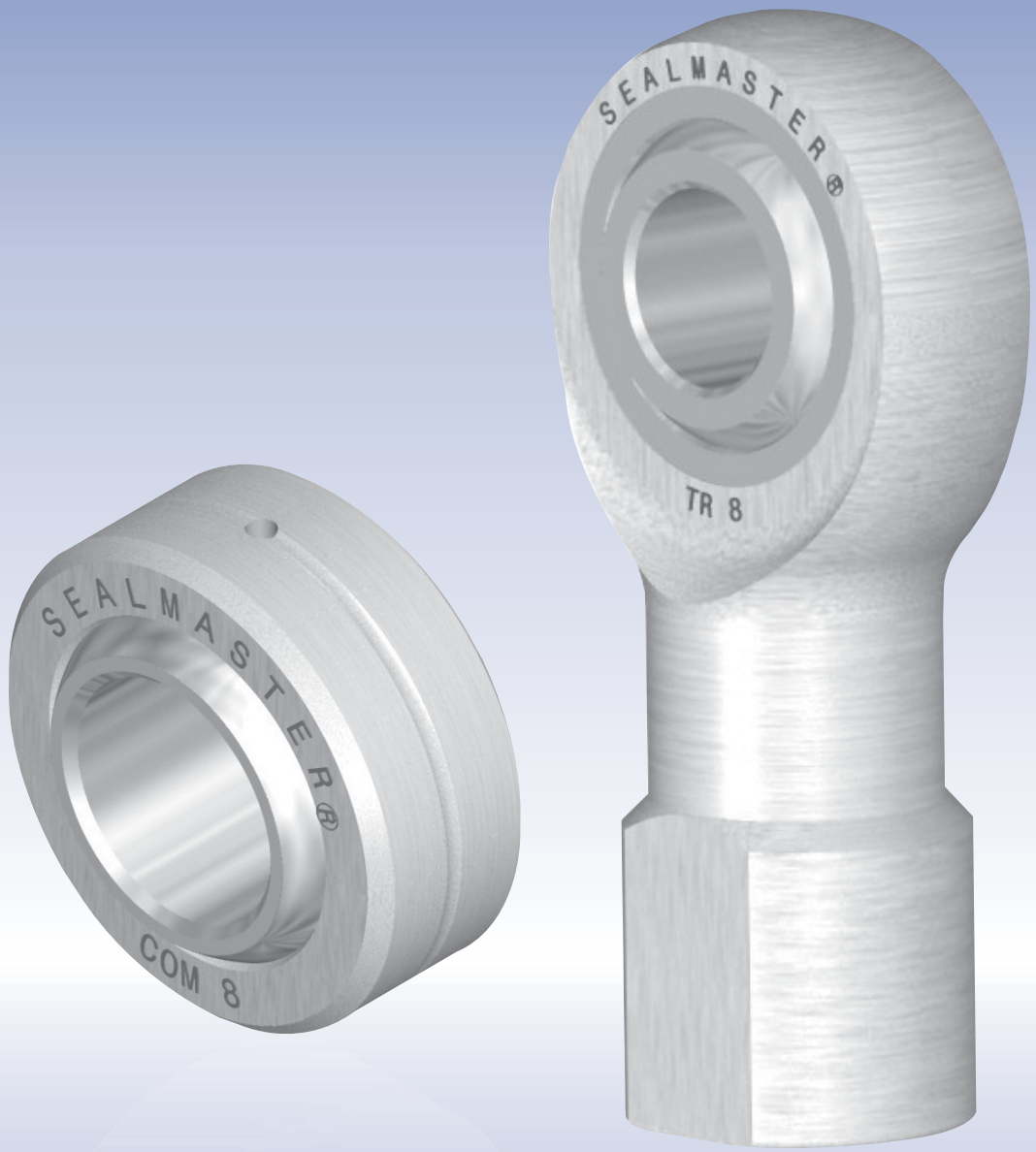
SEALMASTER®
TR 8
SEALMASTER®
COM 8

Rod Ends and Spherical Plain Bearings

Rod ends and spherical plain bearings are designed to support a load, accommodate angular motion, misalignment and oscillation in mechanical motion systems. Rod ends consist of a threaded housing with an integral spherical plain bearing or a threaded housing formed around a ball. Spherical plain bearings consist of an outer race and hardened spherical ball. Spherical plain bearings provide a similar function as rod ends and require housing support.

Bearing Configurations

Male And Female Thread Types In Right And Left Hand Threads With The Option Of Grease Fittings.

Mounting Requirements

Light Press Or Mechanical Fit, Threaded Rod.

Bore Size Range

3/16” To 2”

Materials Housing & Balls

Carbon Steel, Alloy Steel, Stainless Steel

Races

Carbon Steel, Bronze, Delrin*, Stainless And PTFE Liners

* The following trade names, trademarks and/or registered trademarks are used in this material by Regal Power Transmission Solutions are NOT owned or controlled by Regal Power Transmission Solutions and are believed to be owned by the following parties: Delrin; E.I. du Pont de Nemurs and Company. Regal Power Transmission Solutions cannot and does not represent or warrant the accuracy of this information.

SEALMASTER® Rod End Bearings

Rod End Selection Guide

Brand	Image	Product Series	Housing / Race Material	Bore Size Range
Sealmaster Rod Ends		AR / ARE	HT Steel / Steel	3/16” - 3/4”
		ARE-20	HT Steel / Steel	3/16” - 3/4”
		TR / TRE	Steel / Steel	3/16” - 1”
		CFF-T / CFM-T	Steel / PTFE Liner	3/16” - 1”
		TF / TM	Steel / Bronze	3/16” - 3/4”
		CFF / CFM	Steel	3/16” - 1”
		CTFD / CTMD	Steel / Delrin*	3/16” - 3/4”

HT = Heat Treated
SS = Stainless Steel

Design Characteristics				Features					
Static Load	Reversing Load	Shock Load	Relative Base Cost	Construction	Max Temp. (°F)	Grease Fitting	Left Hand Thread	Y-Stud	Page No.
◓	◓	◓	$$$	3 Piece	350	Optional	Standard	---	J-13, J-15
◓	◓	◓	$$$	3 Piece	350	Optional	Standard	---	J-14
◒	◒	◓	$	3 Piece	350	Optional	Standard	Optional	J-16 to J-17
◒	◒	◒	$$	2 Piece	250	---	Standard	Optional	J-18 to J-19
◒	◒	◒	$	3 Piece	350	Optional	Standard	Optional	J-20 to J-21
◒	◓	◒	$	2 Piece	350	Optional	Standard	Optional	J-22 to J-23
○	○	○	$	3 Piece	150	---	--Standard-	Optional	J-24 to J-25

○ = Not Recommended

○ ◒ ◒ ◓ ●

Poor ←→ Best

SEALMASTER® *Rod End Bearings*

Spherical Plain Bearings Selection Guide

Brand	Image	Product Series	Outer / Race Material	Bore Size Range
Sealmaster Spherical Plain Bearings		SBG	Bronze / Steel Ball	3/16” - 1”
		SBG-S	HT Steel / Steel Ball	3/16” - 1”
		SBG-SA	HT Steel / Steel Ball	1/2” - 1”
		SBG-SS	SS / SS Ball	3/16” - 1”
		COR	SS / SS Ball	3/16” - 1”
		COM	Steel / Steel Ball	3/16” - 1”
		FLBG	Steel Outer / Bronze Race / Steel Ball	3/16” - 1”
Sealmaster Heavy Duty Spherical Plain Bearings		BTS-LS	Steel / Steel Ball	3/4” - 1 1/2”
		BH-LS	Steel / Steel Ball	1”- 2”

HT = Heat Treated
SS = Stainless Steel

Design Characteristics				Features				
Static Load	Reversing Load	Shock Load	Relative Base Cost	Construction	Max Temp. (°F)	Groove on Ball ID and Inter-connecting Hole	Seal	Page No.
◒	◒	○	$	2 Piece	350	---	---	J-32
●	◒	◒	$	2 Piece	350	---	---	J-32
●	◒	◒	$	2 Piece	350	Standard	---	J-32
◒	◒	◒	$$	2 Piece	500	---	---	J-32
◒	◒	◒	$$	2 Piece	500	---	---	J-33
◒	◒	◒	$	2 Piece	350	---	---	J-34
◒	◒	◒	$$	3 Piece	350	---	---	J-35
◒	◒	◒	$$$	2 Piece	250	---	Standard	J-36
●	●	●	$$$	2 Piece	350	---	---	J-37

○ = Not Recommended

○ ◒ ◒ ◒ ●

Poor ←→ Best

SEALMASTER® *Rod End Bearings*

Sealmaster Rod Ends Bearings

Sealmaster two and three piece rod end bearing housing designs have been optimized for overall strength. This housing advantage and variety of outer race materials including brass, steel, DELRIN*, and PTFE liners provide a wide selection of application solutions. Sealmaster rod end bearings can be joined together or connected with a threaded rod or tube as linkage assemblies for flexibility in motion transfer. In addition Sealmaster rod end bearings can accommodate angular misalignment to provide ease in assembly and smooth motion transfer in a variety of applications.

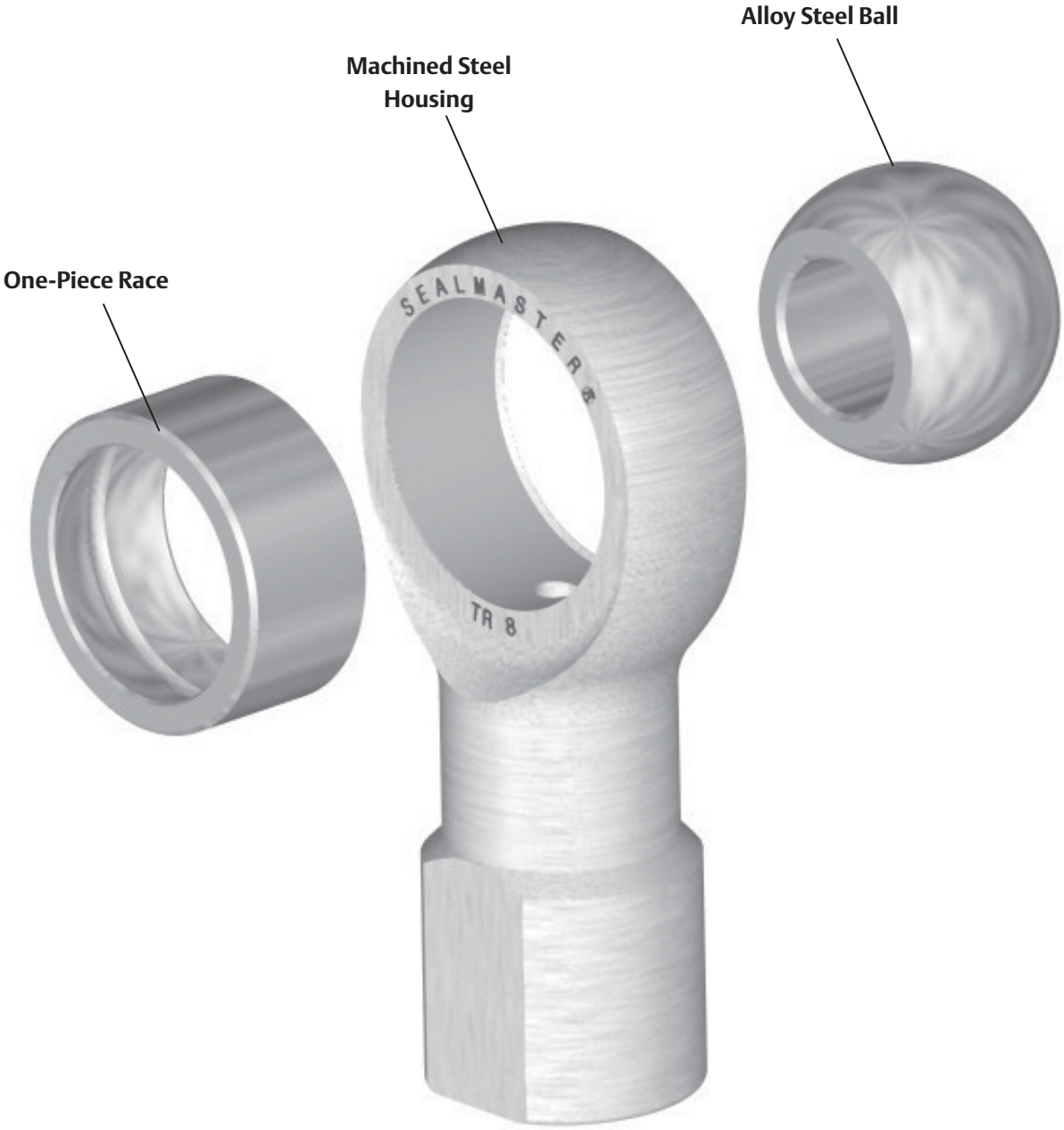

* The following trade names, trademarks and/or registered trademarks are used in this material by Regal Power Transmission Solutions are NOT owned or controlled by Regal Power Transmission Solutions and are believed to be owned by the following parties: Delrin;E.I. du Pont de Nemurs and Company. Regal Power Transmission Solutions cannot and does not represent or warrant the accuracy of this information.

Rod End Bearing Nomenclature

Series* (see table below)

Thread Option
- L - Left Hand
- Right hand (no designation)

Bore Size
- Number of 1/16" of inches (ex. 5 = 5/16")

Optional Suffix
- T - PTFE Liner (CFF-T / CFM-T series only)
- Y - Y-Stud (not available on AR, ARE or ARE-20N)
- 20 - Large Shank (ARE series only)
- R - Reverse Grease Fitting Location with Y-Stud
- N - Grease Fitting

TRE L - 8 N

*Series	Description
TR	**T**hree Piece **R**od End (Internal Threads)
TRE	**T**hree Piece **R**od End (Male **E**xternal Threads)
AR	**A**lloy **R**od End (Internal Threads)
ARE	**A**lloy **R**od End (**E**xternal Threads)
CFF	**C**ommercial **F**emale (Internal Threads)
CFM	**C**ommercial **M**ale (External Threads)
TF	**T**hree Piece **F**emale (Internal Threads)
TM	**T**hree Piece **M**ale (External Threads)
CTFD	**C**ommercial **T**hree Piece **F**emale **D**elrin* (Internal Threads)
CTMD	**C**ommercial **T**hree Piece **M**ale **D**ELRIN (External Threads)

SEALMASTER® *Rod End Bearings*

Features and Benefits

Three-Piece Rod Ends

Sealmaster three-piece rod ends incorporate a one-piece race formed around a hardened steel chrome plated ball in a controlled manufacturing process. Three-piece construction offers flexibility for alternative race materials designed to help solve specific application problems. Consult Application Engineering for material combinations available to meet your application needs.

Machined Steel Housing

- Protective coated for corrosion resistance
- Higher average tensile strength and fatigue life vs. competition
- Wrench flat on female rod ends facilitates assembly
- Full catalog thread depth for maximum thread engagement

One-piece Race

- Reduces pound-out in applications with high frequency oscillation, vibration or shock loading
- Improved spherical ball-race conformity for even load distribution
- Precision ball-race fit
- Less wear than rod ends with two-piece race designs
- Manufactured in steel, aluminum bronze and self lubricating Delrin®

Ball

- Alloy steel heat treated and chrome plated for corrosion resistance
- Better wear resistance properties than carbon steel tin nickel plated balls

Two-Piece Rod Ends

Sealmaster two-piece design rod ends consist of a machined housing formed around a hardened steel chrome plated ball. This construction offers more load capacity than three-piece designs with like housing materials because of greater housing cross section.

Machined Steel Housing

- Protective coated for corrosion resistance
- Wrench flat on female rod ends facilitates assembly

Ball

- Alloy steel, heat treated, chrome plated for wear resistance properties

Multiple Configurations


AR


ARE


ARE-N

Sealmaster AR, ARE and ARE-20N Precision Series Extra Capacity Rod Ends

- Three-piece design rod ends with heat treated alloy steel housing for high static, radial loads. The construction also helps reduce "pound-out" in applications with high frequency oscillation, vibration or shock loading.
- One-piece carbon steel outer race with protective coating for corrosion resistance
- Alloy steel, heat treated, chrome plated ball for wear resistance properties
- Wrench flat on female rod ends facilitates assembly
- Bore sizes form 3/16” to 3/4”
- Grease fittings available on ¼” through ¾” bore sizes
- Male and female versions with right and left hand threads
- The ARE-20N Series offers an oversized shank for additional shank strength


CFF-T


CFM-T

Sealmaster CFF-T and CFM-T Precision Two Piece Rod Ends

- Two piece construction with self-lubricating PTFE liner for applications where grease lubrication is not practical or desirable
- Manufactured with consistent, no load, rotational torque values for accurate linkage control
- Machined carbon steel housings with protective coating for corrosion resistance
- Alloy steel, heat treated, chrome plated ball for wear resistance properties
- Wrench flat on female rod ends facilitates assembly
- Bore sizes form 3/16” to 3/4”
- Male and female versions with right and left hand threads


TR


TRE

Sealmaster TR and TRE Precision Series Rod Ends

- Three-piece construction to help reduce “pound-out” in applications with high frequency oscillation, vibration or shock loading
- One-piece carbon steel outer race with protective coating for corrosion resistance
- Alloy steel, heat treated, chrome plated ball for wear resistance properties
- Wrench flat on female rod ends facilitates assembly
- Bore sizes from 3/16" to 1"
- Grease fittings available on ¼” through 1” bore sizes
- Male and female versions in both right and left hand threads

SEALMASTER® *Rod End Bearings*

Multiple Configurations continued

Sealmaster TF/TM, CFF/CFM, CFTD, CTMD Commercial Series Rod Ends

- Two and three-piece design
- Variety of material and construction combinations
- Machined carbon steel housings with protective coating for corrosion resistance
- Alloy steel, heat treated, chrome plated ball for wear resistance properties
- Wrench flat on female rod ends facilitates assembly
- Bore sizes from 3/16" to 3/4"
- Grease fitting available on CFF/CFM and TF/TM series in 1/4" through 3/4" bore sizes
- Male and female versions in both right and left hand threads


TF


TM

TF and TM

- TF and TM series is designed with one-piece bronze race for lower coefficient of friction.


CFF


CFM

CFF and CFM

- CFF and CFM series with two piece construction has a greater housing cross section and increased load capacity than three piece rod ends with like housing materials.
- The commercial CFF, CFM series provides a lower cost alternative to the precision grade three piece rod ends with like housing material.


CTFD


CTMD

CTFD and CTMD

- CTFD and CTMD series with self-lubricating Delrin* race for light duty applications where oil and grease should be avoided.
- The rod end utilizes a DELRIN acetal resin race material with lower coefficient of friction than metal to metal versions.
- Delrin material withstands vibration without galling or fretting and absorbs little moisture compared to bearings with nylon races.

Multiple Configurations continued

CFF-Y

Sealmaster Rod Ends with Y-Studs

- Y-studs are available on Sealmaster TR/TRE, TR-N/TRE-N, CFF/CFM, CFF-N/CFM-N and CTFD/CTMD rod ends bore sizes from 3/16" to 3/4".
- They are designed to facilitate right angle connections and accommodates up to ± 25 degrees of angular misalignment in any direction.
- The Y-stud contains a hex wrench flat to facilitate assembly advantages and are manufactured from carbon steel and plated for corrosion protection.
- Caution when selecting rod ends with Y-studs: Catalog load ratings are not applicable with Y-studs because of the reduced stud strength due to bending. For load ratings with Y-stud contact Application Engineering.

Design Modifications

Sealmaster rod ends can be ordered with the following design modifications at an extra cost.

Stock Modifications	Design Modifications	Option Offered on These Series	Ordering Instructions and Example for Specifying
	Zerk Type Fitting	AR, ARE, ARE-20, TR, TRE, TF, TM, CFF, CFM	Add “N” to part number suffix Example: TRE-8N (available on sizes 4-16 only) Caution: Catalog load ratings of rod ends are not applicable when grease fittings are specified, because of the reduced cross section of the head. When selecting rod ends with grease fittings, consult Application Engineering for static load capacities.
	Y-Studs	TR, TRE, TF, TM, CFF, CFM, CFF-T, CFM-T, CTFD, CTMD	Add “Y” to part number suffix Example: TRE-8Y (see page J-37 for stud specifications) Caution when selecting rod ends with Y-studs: Catalog load ratings are not applicable with Y-studs because of the reduced stud strength due to bending. For load ratings with Y-stud contact Application Engineering.
Special Modifications	**Design Modifications**	**Option Offered on These Series**	**Ordering Instructions and Example for Specifying**
	Alloy Steel Race	AR, ARE, ARE-20, TR, TRE	Add “S” to part number suffix Example ARE-8S
	Stainless Steel Race	AR, ARE, ARE-20, TR, TRE	Add “SS” to part number suffix Example TRE-6SS

Rod End Bearings

SEALMASTER®

Basic Construction Type: Female 3 pc. Extra Capacity, Precision

Outer Member Material: Alloy Steel, Heat Treated Protective Plating for Corrosion Resistance

Race Material: Carbon Steel with Protective Plating for Corrosion Resistance

Ball Material: Alloy Steel, Heat Treated, Chrome Plated

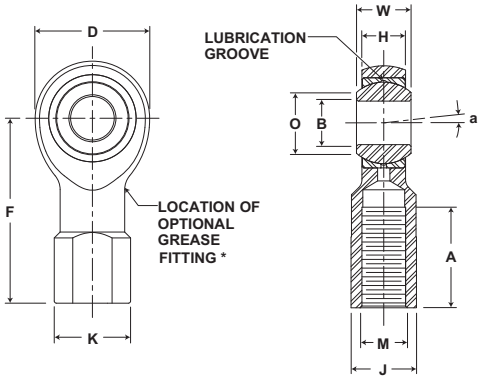

AR, AR-N Series Rod Ends

Part No.	Dimensions inch / mm											Max Static Radial Load lb/N	Misalignment Angle a	Unit Wt. lb/kg
	B	W	H	D	F	A	M	K	J	Ball Diam.	O			
	+.0015 -.0005	+.000 -.005	+.005 -.005	+.010 -.010	+.010 -.010	Min.	Class UNF-3B	Ref.	+.010 -.010	Ref.	Ref.		Deg. +/-	
AR-3	.1900	.312	.250	.625	1.062	.531	#10-32	.375	.312	.437	.306	3700	6 1/2	.030
	4.826	7.92	6.35	15.88	26.97	13.49		9.53	7.92	11.10	7.77	16458		.014
AR-4	.2500	.375	.281	.750	1.312	.719	1/4-28	.469	.375	.500	.331	5370	8	.060
	6.350	9.53	7.14	19.05	33.32	18.26		11.91	9.53	12.70	8.41	23887		.027
AR-5	.3125	.437	.344	.875	1.375	.719	5/16-24	.531	.437	.625	.447	7500	7	.080
	7.938	11.10	8.74	22.23	34.93	18.26		13.49	11.10	15.88	11.35	33362		.036
AR-6	.3750	.500	.406	1.000	1.625	.906	3/8-24	.688	.562	.718	.517	9570	6	.140
	9.525	12.70	10.31	25.40	41.28	23.01		17.48	14.27	18.24	13.13	42569		.064
AR-7	.4375	.562	.437	1.125	1.812	1.031	7/16-20	.750	.625	.812	.586	11000	7	.180
	11.113	14.27	11.10	28.58	46.02	26.19		19.05	15.88	20.62	14.88	48930		.082
AR-8	.5000	.625	.500	1.312	2.125	1.156	1/2-20	.875	.750	.937	.698	13500	6	.290
	12.700	15.88	12.70	33.32	53.98	29.36		22.23	19.05	23.80	17.73	60051		.132
AR-10	.6250	.750	.562	1.500	2.500	1.469	5/8-18	1.000	.875	1.125	.839	17300	8	.430
	15.875	19.05	14.27	38.10	63.50	37.31		25.40	22.23	28.58	21.31	76954		.195
AR-12	.7500	.875	.687	1.750	2.875	1.719	3/4-16	1.125	1.000	1.312	.978	23200	7	.640
	19.050	22.23	17.45	44.45	73.03	43.66		28.58	25.40	33.32	24.84	103199		.290

NOTES
1. Rod ends with Zerk type grease fittings can be obtained by ordering the AR-N series; Example: AR-8N.
2. Grease fittings are available on sizes 4 through 12 only.
*3. Load ratings apply to the AR series only. For AR-N load ratings contact Application Engineering.
4. To order left hand threaded units add letter “L” to part number prefix; Example: ARL-8.
5. For design modifications, see page J-13.

Metric dimensions for reference only.
Not all parts are available from stock. Please contact customer service for availability (800) 626-2120.
For more information on bearing capabilities outside of our standard offering, please contact Application Engineering (800) 626-2093.

SEALMASTER® Rod End Bearings

Basic Construction Type: Male 3 pc. Extra Capacity, Precision

Outer Member Material: Alloy Steel, Heat Treated Protective Plating for Corrosion Resistance

Race Material: Carbon Steel with Protective Plating for Corrosion Resistance

Ball Material: Alloy Steel, Heat Treated, Chrome Plated

Feature: Large Shank

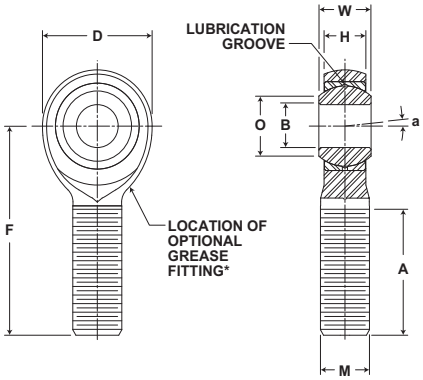

ARE-20, ARE-20N Series Male Rod Ends

Part No.	Dimensions inch / mm									Max Static Radial Load	Misalignment Angle a	Unit Wt. lb/kg
	B	W	H	D	F	A	M	Ball Diam.	O			
	+.0015 -.0005	+.000 -.005	+.005 -.005	+.010 -.010	+.010 -.010	Min.	Class UNF-3A	Ref.	Ref.	lb/N	Deg. +/-	
ARE-3-20	.1900	.312	.250	.625	1.250	.719	1/4-28	.437	.306	3700	6 1/2	.030
	4.826	7.92	6.35	15.88	31.75	18.26		11.10	7.77	16458		.014
ARE-4-20	.2500	.375	.281	.750	1.562	.969	5/16-24	.500	.331	5370	8	.060
	6.350	9.53	7.14	19.05	39.67	24.61		12.70	8.41	23887		.027
ARE-5-20	.3125	.437	.344	.875	1.875	1.219	3/8-24	.625	.447	7500	7	.090
	7.938	11.10	8.74	22.23	47.63	30.96		15.88	11.35	33362		.041
ARE-6-20	.3750	.500	.406	1.000	1.938	1.219	7/16-20	.718	.517	9570	6	.130
	9.525	12.70	10.31	25.40	49.23	30.96		18.24	13.13	42569		.059
ARE-7-20	.4375	.562	.437	1.125	2.125	1.344	1/2-20	.812	.586	11000	7	.180
	11.113	14.27	11.10	28.58	53.98	34.14		20.62	14.88	48930		.082
ARE-8-20	.5000	.625	.500	1.312	2.438	1.469	5/8-18	.937	.698	13500	6	.300
	12.700	15.88	12.70	33.32	61.93	37.31		23.80	17.73	60051		.136
ARE-10-20	.6250	.750	.562	1.500	2.625	1.594	3/4-16	1.125	.839	17300	8	.460
	15.875	19.05	14.27	38.10	66.68	40.49		28.58	21.31	76954		.209
ARE-12-20	.7500	.875	.687	1.750	2.875	1.719	7/8-14	1.312	.978	23200	7	.720
	19.050	22.23	17.45	44.45	73.03	43.66		33.32	24.84	103199		.327

NOTES
1. Rod ends with Zerk type grease fittings can be obtained by ordering the ARE-20N series; Example: ARE-8-20N.
2. Grease fittings are available on sizes 4 through 12 only.
*3. Load ratings apply to the ARE-20 series only. For ARE-20N load ratings contact Application Engineering.
4. To order left hand threaded units add letter “L” to part number prefix; Example: AREL-8-20.
5. For design modifications, see page J-13.

Metric dimensions for reference only.
Not all parts are available from stock. Please contact customer service for availability (800) 626-2120.
For more information on bearing capabilities outside of our standard offering, please contact Application Engineering (800) 626-2093.

Rod End Bearings

SEALMASTER®

Basic Construction Type: Male 3 pc. Extra Capacity, Precision

Outer Member Material: Alloy Steel, Heat Treated Protective Plating for Corrosion Resistance

Race Material: Carbon Steel with Protective Plating for Corrosion Resistance

Ball Material: Alloy Steel, Heat Treated, Chrome Plated

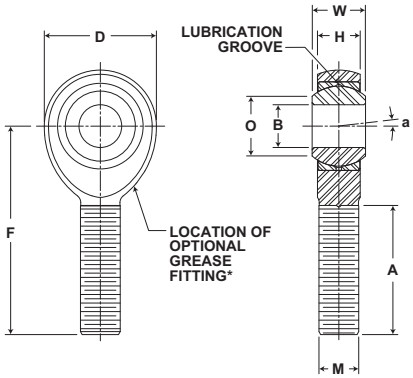

ARE, ARE-N Series Male Rod Ends

Part No.	Dimensions inch / mm									Max Static Radial Load lb/N	Misalignment Angle a	Unit Wt. lb/kg
	B	W	H	D	F	A	M	Ball Diam.	O			
	+.0015 -.0005	+.000 -.005	+.005 -.005	+.010 -.010	+.010 -.010	Min.	Class UNF-3A	Ref.	Ref.		Deg. +/-	
ARE-3	.1900	.312	.250	.625	1.250	.719	#10-32	.437	.306	2850	6 1/2	.030
	4.826	7.92	6.35	15.88	31.75	18.26		11.10	7.77	12677		.014
ARE-4	.2500	.375	.281	.750	1.562	.969	1/4-28	.500	.331	4480	8	.050
	6.350	9.53	7.14	19.05	39.67	24.61		12.70	8.41	19928		.023
ARE-5	.3125	.437	.344	.875	1.875	1.219	5/16-24	.625	.447	7280	7	.080
	7.938	11.10	8.74	22.23	47.63	30.96		15.88	11.35	32383		.036
ARE-6	.3750	.500	.406	1.000	1.938	1.219	3/8-24	.718	.517	9580	6	.120
	9.525	12.70	10.31	25.40	49.23	30.96		18.24	13.13	42614		.054
ARE-7	.4375	.562	.437	1.125	2.125	1.344	7/16-20	.812	.586	11000	7	.170
	11.113	14.27	11.10	28.58	53.98	34.14		20.62	14.88	48930		.077
ARE-8	.5000	.625	.500	1.312	2.438	1.469	1/2-20	.937	.698	13500	6	.260
	12.700	15.88	12.70	33.32	61.93	37.31		23.80	17.73	60051		.118
ARE-10	.6250	.750	.562	1.500	2.625	1.594	5/8-18	1.125	.839	17300	8	.410
	15.875	19.05	14.27	38.10	66.68	40.49		28.58	21.31	76954		.186
ARE-12	.7500	.875	.687	1.750	2.875	1.719	3/4-16	1.312	.978	23200	7	.640
	19.050	22.23	17.45	44.45	73.03	43.66		33.32	24.84	103199		.290

NOTES
1. Rod ends with Zerk type grease fittings can be obtained by ordering the ARE-N series; Example: ARE-8N.
2. Grease fittings are available on sizes 4 through 12 only.
*3. Load ratings apply to the ARE series only. For ARE-N load ratings contact Application Engineering.
4. To order left hand threaded units add letter “L” to part number prefix; Example: AREL-8.
5. For design modifications, see page J-13.

SEALMASTER® Rod End Bearings

Basic Construction Type: Female 3 pc. General Purpose, Precision

Outer Member Material: Carbon Steel with Protective Plating for Corrosion Resistance

Race Material: Carbon Steel with Protective Plating for Corrosion Resistance

Ball Material: Alloy Steel, Heat Treated, Chrome Plated

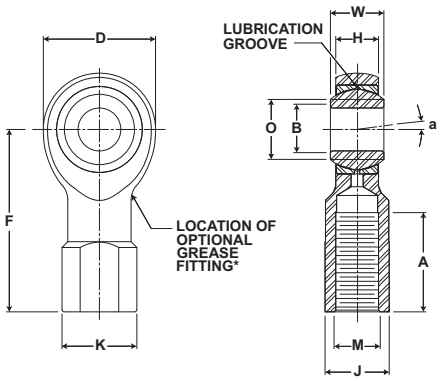

TR, TR-N Series Female Rod Ends

Part No.	Dimensions inch / mm											Max Static Radial Load lb/N	Misalignment Angle a	Unit Wt. lb/kg
	B	W	H	D	F	A	M	K	J	Ball Diam.	O			
	+.0015 -.0005	+.000 -.005	+.005 -.005	+.010 -.010	+.015 -.015	Min.	Class UNF-2B	Ref.	+.010 -.010	Ref.	Ref.		Deg. +/-	
TR-3	.1900	.312	.250	.625	1.062	.531	#10-32	.375	.312	.437	.306	1850	6 1/2	.030
	4.826	7.92	6.35	15.88	26.97	13.49		9.53	7.92	11.10	7.77	8229		.014
TR-4	.2500	.375	.281	.750	1.312	.719	1/4-28	.469	.375	.500	.331	2700	8	.060
	6.350	9.53	7.14	19.05	33.32	18.26		11.91	9.53	12.70	8.41	12010		.027
TR-5	.3125	.437	.344	.875	1.375	.719	5/16-24	.531	.437	.625	.447	3350	7	.080
	7.938	11.10	8.74	22.23	34.93	18.26		13.49	11.10	15.88	11.35	14902		.036
TR-6	.3750	.500	.406	1.000	1.625	.906	3/8-24	.688	.562	.718	.517	4450	6	.140
	9.525	12.70	10.31	25.40	41.28	23.01		17.48	14.27	18.24	13.13	19795		.064
TR-7	.4375	.562	.437	1.125	1.812	1.031	7/16-20	.750	.625	.812	.586	5350	7	.180
	11.113	14.27	11.10	28.58	46.02	26.19		19.05	15.88	20.62	14.88	23798		.082
TR-8	.5000	.625	.500	1.312	2.125	1.156	1/2-20	.875	.750	.937	.698	7400	6	.290
	12.700	15.88	12.70	33.32	53.98	29.36		22.23	19.05	23.80	17.73	32917		.132
TR-10	.6250	.750	.562	1.500	2.500	1.469	5/8-18	1.000	.875	1.125	.839	8050	8	.430
	15.875	19.05	14.27	38.10	63.50	37.31		25.40	22.23	28.58	21.31	35808		.195
TR-12	.7500	.875	.687	1.750	2.875	1.719	3/4-16	1.125	1.000	1.312	.978	11300	7	.640
	19.050	22.23	17.45	44.45	73.03	43.66		28.58	25.40	33.32	24.84	50265		.290
** TR-16	1.0000	1.375	1.000	2.750	4.125	2.094	1 1/4-12	1.688	1.500	1.875	1.269	21000	8 1/2	2.250
	25.400	34.93	25.40	69.85	104.78	53.19		42.88	38.10	47.63	32.23	93413		1.021

NOTES
1. Rod ends with Zerk type grease fittings can be obtained by ordering the TR-N series; Example: TR-8N.
2. Grease fittings are available on sizes 4 through 16 only.
*3. Load ratings apply to the TR series only. For TR-N load ratings contact Application Engineering.
4. To order left hand threaded units add letter “L” to part number prefix; Example: TRL-8.
5. Add letter "Y" to the part number suffix to indicate stud. Example: TR-8Y.
6. For design modifications, see page J-13.
**7. Tolerances for "D" dimensions is +.030, -.010. For "H" dimensions is +.030, -.010.

Metric dimensions for reference only.
Not all parts are available from stock. Please contact customer service for availability (800) 626-2120.
For more information on bearing capabilities outside of our standard offering, please contact Application Engineering (800) 626-2093.

Rod End Bearings

SEALMASTER®

Basic Construction Type: Male 3 pc. General Purpose, Precision

Outer Member Material: Carbon Steel with Protective Plating for Corrosion Resistance

Race Material: Carbon Steel with Protective Plating for Corrosion Resistance

Ball Material: Alloy Steel, Heat Treated, Chrome Plated

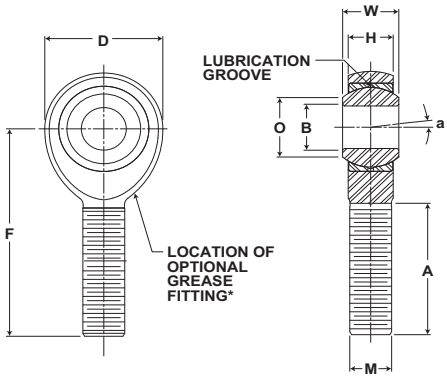

TRE, TRE-N Series Female Rod Ends

Part No.	Dimensions inch / mm									Max Static Radial Load lb/N	Misalignment Angle a	Unit Wt. lb/kg
	B	W	H	D	F	A	M	Ball Diam.	O			
	+.0015 -.0005	+.000 -.005	+.005 -.005	+.010 -.010	+.015 -.015	Min.	Class UNF-3A	Ref.	Ref.		Deg. +/-	
TRE-3	.1900 4.826	.312 7.92	.250 6.35	.625 15.88	1.250 31.75	.719 18.26	#10-32	.437 11.10	.306 7.77	900 4003	6 1/2	.030 .014
TRE-4	.2500 6.350	.375 9.53	.281 7.14	.750 19.05	1.562 39.67	.969 24.61	1/4-28	.500 12.70	.331 8.41	1700 7562	8	.050 .023
TRE-5	.3125 7.938	.437 11.10	.344 8.74	.875 22.23	1.875 47.63	1.219 30.96	5/16-24	.625 15.88	.447 11.35	2500 11121	7	.080 .036
TRE-6	.3750 9.525	.500 12.70	.406 10.31	1.000 25.40	1.938 49.23	1.219 30.96	3/8-24	.718 18.24	.517 13.13	4000 17793	6	.120 .054
TRE-7	.4375 11.113	.562 14.27	.437 11.10	1.125 28.58	2.125 53.98	1.344 34.14	7/16-20	.812 20.62	.586 14.88	5000 22241	7	.170 .077
TRE-8	.5000 12.700	.625 15.88	.500 12.70	1.312 33.32	2.438 61.93	1.469 37.31	1/2-20	.937 23.80	.698 17.73	7000 31138	6	.260 .118
TRE-10	.6250 15.875	.750 19.05	.562 14.27	1.500 38.10	2.625 66.68	1.594 40.49	5/8-18	1.125 28.58	.839 21.31	8050 35808	8	.410 .186
TRE-12	.7500 19.050	.875 22.23	.687 17.45	1.750 44.45	2.875 73.03	1.719 43.66	3/4-16	1.312 33.32	.978 24.84	11300 50265	7	.640 .290
** TRE-16	1.0000 25.400	1.375 34.93	1.000 25.40	2.750 69.85	4.125 104.78	2.094 53.19	1 1/4-12	1.875 47.63	1.269 32.23	21000 93413	8 1/2	2.250 1.021

NOTES
1. Rod ends with Zerk type grease fittings can be obtained by ordering the TRE-N series; Example: TRE-8N.
2. Grease fittings are available on sizes 4 through 16 only.
*3. Load ratings apply to the TRE series only. For TRE-N load ratings contact Application Engineering.
4. To order left hand threaded units add letter “L” to part number prefix; Example: TREL-8.
5. Add letter “Y” to the part number suffix to indicate stud; Example: TRE-8Y.
6. For design modifications, see page J-13.
** 7. Tolerances for “D” Dimension is +.030, -.010. For “H” Dimension is +.030, -.010.

SEALMASTER® Rod End Bearings

Basic Construction Type: Female 2 pc. General Purpose, Precision

Outer Member Material: Carbon Steel with Protective Plating for Corrosion Resistance

Ball Material: Alloy Steel, Heat Treated, Chrome Plated

Feature: PTFE Fabric Liner

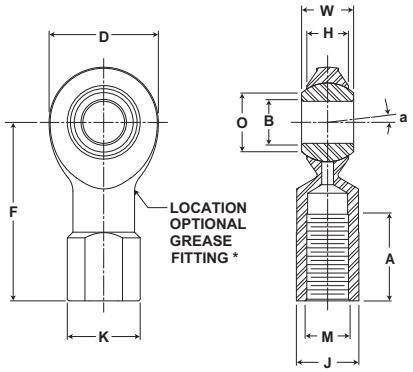

CFF-T Series Female Rod Ends

Part No.	Dimensions inch / mm											Max Static Radial Load lb/N	Misalignment Angle a	Unit Wt. lb/kg
	B	W	H	D	F	A	M	K	J	Ball Diam.	O			
	+.0015 -.0005	+.000 -.005	+.015 -.015	+.031 -.031	+.015 -.015	Min.	Class UNF-2B	Ref.	+.010 -.010	Ref.	Ref.		Deg. +/-	
CFF-3T	.1900	.312	.250	.625	1.062	.469	#10-32	.375	.312	.437	.306	865	6 1/2	.030
	4.826	7.92	6.35	15.88	26.97	11.91		9.53	7.92	11.10	7.77	3848		.014
CFF-4T	.2500	.375	.281	.750	1.312	.656	1/4-28	.469	.375	.500	.331	1550	8	.060
	6.350	9.53	7.14	19.05	33.32	16.66		11.91	9.53	12.70	8.41	6895		.027
CFF-5T	.3125	.437	.344	.875	1.375	.656	5/16-24	.531	.437	.625	.447	2080	7	.080
	7.938	11.10	8.74	22.23	34.93	16.66		13.49	11.10	15.88	11.35	9252		.036
CFF-6T	.3750	.500	.406	1.000	1.625	.781	3/8-24	.688	.562	.718	.517	2950	6	.140
	9.525	12.70	10.31	25.40	41.28	19.84		17.48	14.27	18.24	13.13	13122		.064
CFF-7T	.4375	.562	.437	1.125	1.812	.906	7/16-20	.750	.625	.812	.586	3160	7	.180
	11.113	14.27	11.10	28.58	46.02	23.01		19.05	15.88	20.62	14.88	14056		.082
CFF-8T	.5000	.625	.500	1.312	2.125	1.031	1/2-20	.875	.750	.937	.698	4920	6	.290
	12.700	15.88	12.70	33.32	53.98	26.19		22.23	19.05	23.80	17.73	21885		.132
CFF-10T	.6250	.750	.562	1.500	2.500	1.344	5/8-18	1.000	.875	1.125	.839	5460	8	.430
	15.875	19.05	14.27	38.10	63.50	34.14		25.40	22.23	28.58	21.31	24287		.195
CFF-12T	.7500	.875	.687	1.750	2.875	1.531	3/4-16	1.125	1.000	1.312	.978	8300	7	.640
	19.050	22.23	17.45	44.45	73.03	38.89		28.58	25.40	33.32	24.84	36920		.290
CFF-16T	1.0000	1.375	1.000	2.750	4.125	2.000	1 1/4-12	1.688	1.500	1.875	1.269	21000	8 1/2	2.250
	25.400	34.93	25.40	69.85	104.78	50.80		42.88	38.10	47.63	32.23	93413		1.021

NOTES
1. To order left hand threaded units add letter “L” to part number prefix; Example: CFFL-8T.
2. “T” in part number prefix indicates PTFE liner.
3. Add letter “Y” to the part number suffix to indicate stud; Example: CFF-8TY.
4. For design modifications, see page J-13.

Metric dimensions for reference only.
Not all parts are available from stock. Please contact customer service for availability (800) 626-2120.
For more information on bearing capabilities outside of our standard offering, please contact Application Engineering (800) 626-2093.

Rod End Bearings

SEALMASTER®

Basic Construction Type: Male 2 pc. General Purpose, Precision

Outer Member Material: Carbon Steel with Protective Plating for Corrosion Resistance

Ball Material: Alloy Steel, Heat Treated, Chrome Plated

Feature: PTFE Fabric Liner

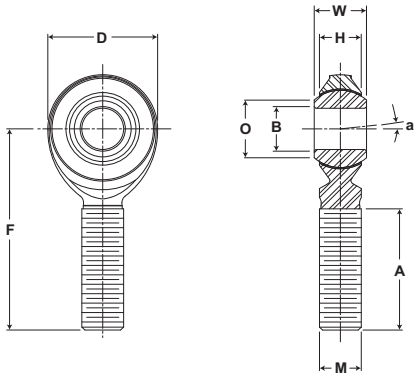

CFM-T Series Male Rod Ends

Part No.	Dimensions inch / mm									Max Static Radial Load lb/N	Misalignment Angle a	Unit Wt. lb/kg
	B	W	H	D	F	A	M	Ball Diam.	O			
	+.0015 -.0005	+.000 -.005	+.015 -.015	+.031 -.031	+.015 -.015	Min.	Class UNF-3A	Ref.	Ref.		Deg. +/-	
CFM-3T	.1900 4.826	.312 7.92	.250 6.35	.625 15.88	1.250 31.75	.719 18.26	#10-32	.437 11.10	.306 7.77	865 3848	6 1/2	.030 .014
CFM-4T	.2500 6.350	.375 9.53	.281 7.14	.750 19.05	1.562 39.67	.969 24.61	1/4-28	.500 12.70	.331 8.41	1550 6895	8	.050 .023
CFM-5T	.3125 7.938	.437 11.10	.344 8.74	.875 22.23	1.875 47.63	1.219 30.96	5/16-24	.625 15.88	.447 11.35	2080 9252	7	.080 .036
CFM-6T	.3750 9.525	.500 12.70	.406 10.31	1.000 25.40	1.938 49.23	1.219 30.96	3/8-24	.718 18.24	.517 13.13	2950 13122	6	.120 .054
CFM-7T	.4375 11.113	.562 14.27	.437 11.10	1.125 28.58	2.125 53.98	1.344 34.14	7/16-20	.812 20.62	.586 14.88	3160 14056	7	.170 .077
CFM-8T	.5000 12.700	.625 15.88	.500 12.70	1.312 33.32	2.438 61.93	1.469 37.31	1/2-20	.937 23.80	.698 17.73	4920 21885	6	.260 .118
CFM-10T	.6250 15.875	.750 19.05	.562 14.27	1.500 38.10	2.625 66.68	1.594 40.49	5/8-18	1.125 28.58	.839 21.31	5460 24287	8	.410 .186
CFM-12T	.7500 19.050	.875 22.23	.687 17.45	1.750 44.45	2.875 73.03	1.719 43.66	3/4-16	1.312 33.32	.978 24.84	8300 36920	7	.640 .290
CFM-16T	1.0000 25.400	1.375 34.93	1.000 25.40	2.750 69.85	4.125 104.78	2.094 53.19	1 1/4-12	1.875 47.63	1.269 32.23	21000 93413	8 1/2	2.250 1.021

NOTES
1. To order left hand threaded units add letter “L” to part number prefix. Example: CFML-8T.
2. “T” in part number prefix indicates PTFE liner.
3. Add letter “Y” to the part number suffix to indicate stud; Example: CFM-8TY.
4. For design modifications, see page J-13.

SEALMASTER® Rod End Bearings

Basic Construction Type: Female 3 pc. General Purpose, Commercial

Outer Member Material: Carbon Steel with Protective Plating for Corrosion Resistance

Race Material: Bronze

Ball Material: Alloy Steel, Heat Treated, Chrome Plated

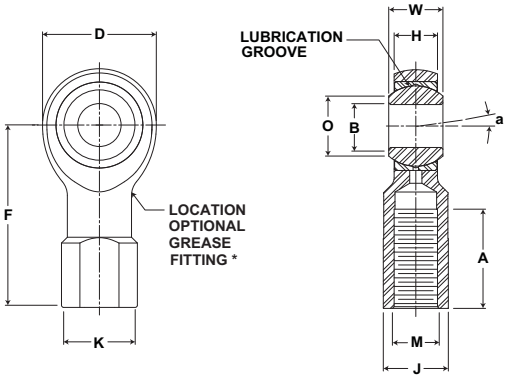

TF, TF-N Series Female Rod Ends

Part No.	Dimensions inch / mm											Max Static Radial Load lb/N	Misalignment Angle a	Unit Wt. lb/kg
	B	W	H	D	F	A	M	K	J	Ball Diam.	O			
	+.0025 -.0005	+.000 -.005	+.010 -.010	+.031 -.031	+.015 -.015	Min.	Class UNF-2B	Ref.	+.010 -.010	Ref.	Ref.		Deg. +/-	
TF-3	.1900	.312	.250	.625	1.062	.531	#10-32	.375	.312	.437	.306	1850	6 1/2	.030
	4.826	7.92	6.35	15.88	26.97	13.49		9.53	7.92	11.10	7.77	8229		.014
TF-4	.2500	.375	.281	.750	1.312	.719	1/4-28	.469	.375	.500	.331	2700	8	.060
	6.350	9.53	7.14	19.05	33.32	18.26		11.91	9.53	12.70	8.41	12010		.027
TF-5	.3125	.437	.344	.875	1.375	.719	5/16-24	.531	.437	.625	.447	3350	7	.080
	7.938	11.10	8.74	22.23	34.93	18.26		13.49	11.10	15.88	11.35	14902		.036
TF-6	.3750	.500	.406	1.000	1.625	.906	3/8-24	.688	.562	.718	.517	4450	6	.140
	9.525	12.70	10.31	25.40	41.28	23.01		17.48	14.27	18.24	13.13	19795		.064
TF-7	.4375	.562	.437	1.125	1.812	1.031	7/16-20	.750	.625	.812	.586	5350	7	.180
	11.113	14.27	11.10	28.58	46.02	26.19		19.05	15.88	20.62	14.88	23798		.082
TF-8	.5000	.625	.500	1.312	2.125	1.156	1/2-20	.875	.750	.937	.698	7400	6	.290
	12.700	15.88	12.70	33.32	53.98	29.36		22.23	19.05	23.80	17.73	32917		.132
TF-10	.6250	.750	.562	1.500	2.500	1.469	5/8-18	1.000	.875	1.125	.839	8050	8	.430
	15.875	19.05	14.27	38.10	63.50	37.31		25.40	22.23	28.58	21.31	35808		.195
TF-12	.7500	.875	.687	1.750	2.875	1.719	3/4-16	1.125	1.000	1.312	.978	11300	7	.640
	19.050	22.23	17.45	44.45	73.03	43.66		28.58	25.40	33.32	24.84	50265		.290

NOTES
1. Rod ends with Zerk type grease fittings can be obtained by ordering the TF-N series; Example: TF-8N.
2. Grease fittings are available on sizes 4 through 12 only.
*3. Load ratings apply to the TF series only. For TF-N load ratings contact Application Engineering.
4. To order left hand threaded units add letter “L” to part number prefix; Example: TFL-8.
5. Add letter “Y” to the part number suffix to indicate stud; Example: TF-8Y.
6. For design modifications, see page J-13.

Metric dimensions for reference only.
Not all parts are available from stock. Please contact customer service for availability (800) 626-2120.
For more information on bearing capabilities outside of our standard offering, please contact Application Engineering (800) 626-2093.

Rod End Bearings

SEALMASTER®

Basic Construction Type: Male 3 pc. General Purpose, Commercial

Outer Member Material: Carbon Steel with Protective Plating for Corrosion Resistance

Race Material: Bronze

Ball Material: Alloy Steel, Heat Treated, Chrome Plated

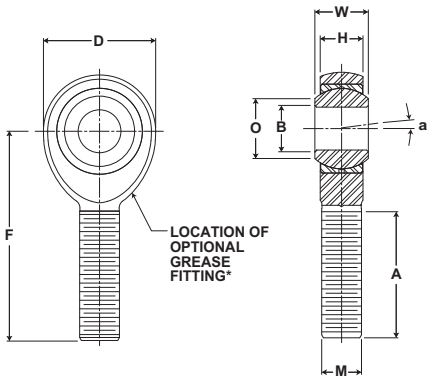

TM, TM-N Series Male Rod Ends

Part No.	Dimensions inch / mm									Max Static Radial Load lb/N	Misalignment Angle a	Unit Wt. lb/kg
	B	W	H	D	F	A	M	Ball Diam.	O			
	+.0025 -.0005	+.000 -.005	+.010 -.010	+.031 -.031	+.015 -.015	Min.	Class UNF-3A	Ref.	Ref.		Deg. +/-	
TM-3	.1900	.312	.250	.625	1.250	.719	#10-32	.437	.306	900	6 1/2	.030
	4.826	7.92	6.35	15.88	31.75	18.26		11.10	7.77	4003		.014
TM-4	.2500	.375	.281	.750	1.562	.969	1/4-28	.500	.331	1700	8	.050
	6.350	9.53	7.14	19.05	39.67	24.61		12.70	8.41	7562		.023
TM-5	.3125	.437	.344	.875	1.875	1.219	5/16-24	.625	.447	2500	7	.080
	7.938	11.10	8.74	22.23	47.63	30.96		15.88	11.35	11121		.036
TM-6	.3750	.500	.406	1.000	1.938	1.219	3/8-24	.718	.517	4000	6	.120
	9.525	12.70	10.31	25.40	49.23	30.96		18.24	13.13	17793		.054
TM-7	.4375	.562	.437	1.125	2.125	1.344	7/16-20	.812	.586	5000	7	.170
	11.113	14.27	11.10	28.58	53.98	34.14		20.62	14.88	22241		.077
TM-8	.5000	.625	.500	1.312	2.438	1.469	1/2-20	.937	.698	7000	6	.260
	12.700	15.88	12.70	33.32	61.93	37.31		23.80	17.73	31138		.118
TM-10	.6250	.750	.562	1.500	2.625	1.594	5/8-18	1.125	.839	8050	8	.410
	15.875	19.05	14.27	38.10	66.68	40.49		28.58	21.31	35808		.186
TM-12	.7500	.875	.687	1.750	2.875	1.719	3/4-16	1.312	.978	11300	7	.640
	19.050	22.23	17.45	44.45	73.03	43.66		33.32	24.84	50265		.290

NOTES
1. Rod ends with Zerk type grease fittings can be obtained by ordering the TM-N series; Example: TM-8N.
2. Grease fittings are available on sizes 4 through 12 only.
*3. Load ratings apply to the TM series only. For TM-N load ratings contact Application Engineering.
4. To order left hand threaded units add letter “L” to part number prefix; Example: TML-8.
5. Add letter “Y” to the part number suffix to indicate stud; Example: TM-8Y.
6. For design modifications, see page J-13.

SEALMASTER® Rod End Bearings

Basic Construction Type: Female 2 pc. General Purpose, Commercial

Outer Member Material: Carbon Steel with Protective Plating for Corrosion Resistance

Ball Material: Alloy Steel, Heat Treated, Chrome Plated

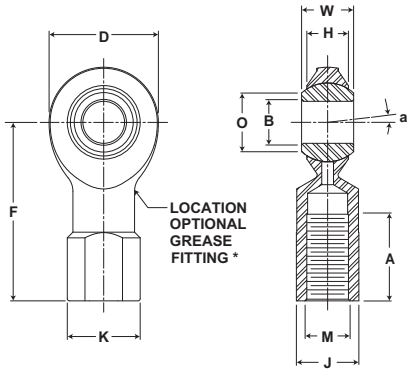

CFF, CFF-N Series Female Rod Ends

Part No.	Dimensions inch / mm											Max Static Radial Load lb/N	Misalignment Angle a	Unit Wt. lb/kg
	B	W	H	D	F	A	M	K	J	Ball Diam.	O			
	+.0025 -.0005	+.005 -.005	+.015 -.015	+.031 -.031	+.015 -.015	Min.	Class UNF-2B	Ref.	+.010 -.010	Ref.	Ref.		Deg. +/-	
CFF-3	.1900	.312	.250	.625	1.062	.469	#10-32	.375	.312	.437	.306	2000	6 1/2	.030
	4.826	7.92	6.35	15.88	26.97	11.91		9.53	7.92	11.10	7.77	8896		.014
CFF-4	.2500	.375	.281	.750	1.312	.656	1/4-28	.469	.375	.500	.331	3200	8	.060
	6.350	9.53	7.14	19.05	33.32	16.66		11.91	9.53	12.70	8.41	14234		.027
CFF-5	.3125	.437	.344	.875	1.375	.656	5/16-24	.531	.437	.625	.447	3800	7	.080
	7.938	11.10	8.74	22.23	34.93	16.66		13.49	11.10	15.88	11.35	16903		.036
CFF-6	.3750	.500	.406	1.000	1.625	.781	3/8-24	.688	.562	.718	.517	5000	6	.140
	9.525	12.70	10.31	25.40	41.28	19.84		17.48	14.27	18.24	13.13	22241		.064
CFF-7	.4375	.562	.437	1.125	1.812	.906	7/16-20	.750	.625	.812	.586	6500	7	.180
	11.113	14.27	11.10	28.58	46.02	23.01		19.05	15.88	20.62	14.88	28913		.082
CFF-8	.5000	.625	.500	1.312	2.125	1.031	1/2-20	.875	.750	.937	.698	9000	6	.290
	12.700	15.88	12.70	33.32	53.98	26.19		22.23	19.05	23.80	17.73	40034		.132
CFF-10	.6250	.750	.562	1.500	2.500	1.344	5/8-18	1.000	.875	1.125	.839	10000	8	.430
	15.875	19.05	14.27	38.10	63.50	34.14		25.40	22.23	28.58	21.31	44482		.195
CFF-12	.7500	.875	.687	1.750	2.875	1.531	3/4-16	1.125	1.000	1.312	.978	14000	7	.640
	19.050	22.23	17.45	44.45	73.03	38.89		28.58	25.40	33.32	24.84	62275		.290
CFF-16	1.0000	1.375	1.000	2.750	4.125	2.000	1 1/4-12	1.688	1.500	1.875	1.269	25200	8 1/2	2.250
	25.400	34.93	25.40	69.85	104.78	50.80		42.88	38.10	47.63	32.23	112095		1.021

NOTES
1. Rod ends with Zerk type grease fittings can be obtained by ordering the CFF-N series; Example: CFF-8N.
2. Grease fittings are available on sizes 4 through 16 only.
*3. Load ratings apply to the CFF series only. For CFF-N load ratings contact Application Engineering.
4. To order left hand threaded units add letter “L” to part number prefix; Example: CFFL-8.
5. Add letter “Y” to the part number suffix to indicate stud; Example: CFF-8Y.
6. For design modifications, see page J-13.

Metric dimensions for reference only.
Not all parts are available from stock. Please contact customer service for availability (800) 626-2120.
For more information on bearing capabilities outside of our standard offering, please contact Application Engineering (800) 626-2093.

Rod End Bearings

SEALMASTER®

Basic Construction Type: Male 2 pc. General Purpose, Commercial

Outer Member Material Carbon Steel with Protective Plating for Corrosion Resistance

Ball Material: Alloy Steel, Heat Treated, Chrome Plated

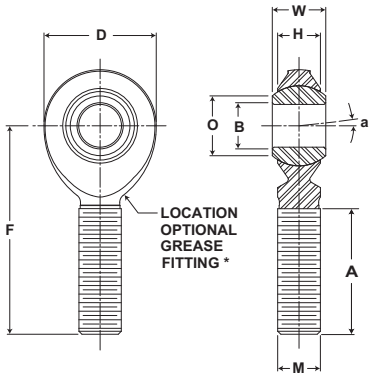

CFM, CFM-N Series Male Rod Ends

Part No.	Dimensions inch / mm									Max Static Radial Load lb/N	Misalignment Angle a	Unit Wt. lb/kg
	B	W	H	D	F	A	M	Ball Diam.	O			
	+.0025 -.0005	+.005 -.005	+.015 -.015	+.031 -.031	+.015 -.015	Min.	Class UNF-3A	Ref.	Ref.		Deg. +/-	
CFM-3	.1900	.312	.250	.625	1.250	.719	#10-32	.437	.306	950	6 1/2	.030
	4.826	7.92	6.35	15.88	31.75	18.26		11.10	7.77	4226		.014
CFM-4	.2500	.375	.281	.750	1.562	.969	1/4-28	.500	.331	2000	8	.050
	6.350	9.53	7.14	19.05	39.67	24.61		12.70	8.41	8896		.023
CFM-5	.3125	.437	.344	.875	1.875	1.219	5/16-24	.625	.447	3000	7	.080
	7.938	11.10	8.74	22.23	47.63	30.96		15.88	11.35	13345		.036
CFM-6	.3750	.500	.406	1.000	1.938	1.219	3/8-24	.718	.517	5000	6	.110
	9.525	12.70	10.31	25.40	49.23	30.96		18.24	13.13	22241		.050
CFM-7	.4375	.562	.437	1.125	2.125	1.344	7/16-20	.812	.586	6500	7	.160
	11.113	14.27	11.10	28.58	53.98	34.14		20.62	14.88	28913		.073
CFM-8	.5000	.625	.500	1.312	2.438	1.469	1/2-20	.937	.698	9000	6	.240
	12.700	15.88	12.70	33.32	61.93	37.31		23.80	17.73	40034		.109
CFM-10	.6250	.750	.562	1.500	2.625	1.594	5/8-18	1.125	.839	10000	8	.400
	15.875	19.05	14.27	38.10	66.68	40.49		28.58	21.31	44482		.181
CFM-12	.7500	.875	.687	1.750	2.875	1.719	3/4-16	1.312	.978	14000	7	.630
	19.050	22.23	17.45	44.45	73.03	43.66		33.32	24.84	62275		.286
CFM-16	1.0000	1.375	1.000	2.750	4.125	2.094	1 1/4-12	1.875	1.269	25200	8 1/2	2.250
	25.400	34.93	25.40	69.85	104.78	53.19		47.63	32.23	112095		1.021

NOTES
1. Rod ends with Zerk type grease fittings can be obtained by ordering the CFM-N series; Example: CFM-8N.
2. Grease fittings are available on sizes 4 through 16 only.
*3. Load ratings apply to the CFM series only. For CFM-N load ratings contact Application Engineering.
4. To order left hand threaded units add letter “L” to part number prefix; Example: CFML-8.
5. Add letter “Y” to the part number suffix to indicate stud; Example: CFM-8Y.
6. For design modifications, see page J-13.

SEALMASTER® Rod End Bearings

Basic Construction Type: Female 3 pc. General Purpose, Commercial

Outer Member Material: Carbon Steel with Protective Plating for Corrosion Resistance

Race Material: Delrin*

Ball Material: Alloy Steel, Heat Treated, Chrome Plated

Feature: Self-Lubricating

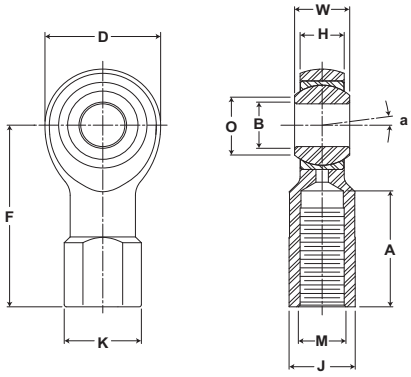

CTFD Series Female Rod Ends

Part No.	Dimensions inch / mm											Max Static Radial Load lb/N	Misalignment Angle a	Unit Wt. lb/kg
	B	W	H	D	F	A	M	K	J	Ball Diam.	O			
	+.0025 -.0005	+.005 -.005	+.010 -.010	+.031 -.031	+.015 -.015	Min.	Class UNF-2B	Ref.	+.010 -.010	Ref.	Ref.		Deg. +/-	
CTFD-3	.1900	.312	.250	.625	1.062	.531	#10-32	.375	.312	.437	.306	800	6 1/2	.030
	4.826	7.92	6.35	15.88	26.97	13.49		9.53	7.92	11.10	7.77	3559		.014
CTFD-4	.2500	.375	.281	.750	1.312	.719	1/4-28	.469	.375	.500	.331	1060	8	.060
	6.350	9.53	7.14	19.05	33.32	18.26		11.91	9.53	12.70	8.41	4715		.027
CTFD-5	.3125	.437	.344	.875	1.375	.719	5/16-24	.531	.437	.625	.447	1570	7	.080
	7.938	11.10	8.74	22.23	34.93	18.26		13.49	11.10	15.88	11.35	6984		.036
CTFD-6	.3750	.500	.406	1.000	1.625	.906	3/8-24	.688	.562	.718	.517	2150	6	.140
	9.525	12.70	10.31	25.40	41.28	23.01		17.48	14.27	18.24	13.13	9564		.064
CTFD-7	.4375	.562	.437	1.125	1.812	1.031	7/16-20	.750	.625	.812	.586	2600	7	.180
	11.113	14.27	11.10	28.58	46.02	26.19		19.05	15.88	20.62	14.88	11565		.082
CTFD-8	.5000	.625	.500	1.312	2.125	1.156	1/2-20	.875	.750	.937	.698	3420	6	.290
	12.700	15.88	12.70	33.32	53.98	29.36		22.23	19.05	23.80	17.73	15213		.132
CTFD-10	.6250	.750	.562	1.500	2.500	1.469	5/8-18	1.000	.875	1.125	.839	4620	8	.430
	15.875	19.05	14.27	38.10	63.50	37.31		25.40	22.23	28.58	21.31	20551		.195
CTFD-12	.7500	.875	.687	1.750	2.875	1.719	3/4-16	1.125	1.000	1.312	.978	6600	7	.640
	19.050	22.23	17.45	44.45	73.03	43.66		28.58	25.40	33.32	24.84	29358		.290

NOTES
1. To order left hand threaded units add letter “L” to part number prefix; Example: CTFDL-8.
2. Add letter “Y” to the part number suffix to indicate stud; Example: CTFD-8Y.
3. For design modifications, see page J-13.
4. Caution: Prolonged exposure to ultraviolet light can cause loss of mechanical properties in DELRIN material. Consult Application Engineering for application assistance.

Metric dimensions for reference only.
Not all parts are available from stock. Please contact customer service for availability (800) 626-2120.
For more information on bearing capabilities outside of our standard offering, please contact Application Engineering (800) 626-2093.

Rod End Bearings

SEALMASTER®

Basic Construction Type: Male 3 pc. General Purpose, Commercial

Outer Member Material: Carbon Steel with Protective Plating for Corrosion Resistance

Race Material: Delrin*

Ball Material: Alloy Steel, Heat Treated, Chrome Plated

Feature: Self-Lubricating

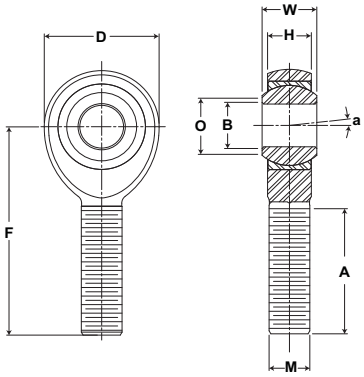

CTMD Series Male Rod Ends

Part No.	Dimensions inch / mm									Max Static Radial Load lb/N	Misalignment Angle a	Unit Wt. lb/kg
	B	W	H	D	F	A	M	Ball Diam.	O			
	+.0025 -.0005	+.005 -.005	+.010 -.010	+.031 -.031	+.015 -.015	Min.	Class UNF-3A	Ref.	Ref.		Deg. +/-	
CTMD-3	.1900	.312	.250	.625	1.250	.719	#10-32	.437	.306	800	6 1/2	.030
	4.826	7.92	6.35	15.88	31.75	18.26		11.10	7.77	3559		.014
CTMD-4	.2500	.375	.281	.750	1.562	.969	1/4-28	.500	.331	1060	8	.050
	6.350	9.53	7.14	19.05	39.67	24.61		12.70	8.41	4715		.023
CTMD-5	.3125	.437	.344	.875	1.875	1.219	5/16-24	.625	.447	1570	7	.080
	7.938	11.10	8.74	22.23	47.63	30.96		15.88	11.35	6984		.036
CTMD-6	.3750	.500	.406	1.000	1.938	1.219	3/8-24	.718	.517	2150	6	.120
	9.525	12.70	10.31	25.40	49.23	30.96		18.24	13.13	9564		.054
CTMD-7	.4375	.562	.437	1.125	2.125	1.344	7/16-20	.812	.586	2600	7	.170
	11.113	14.27	11.10	28.58	53.98	34.14		20.62	14.88	11565		.077
CTMD-8	.5000	.625	.500	1.312	2.438	1.469	1/2-20	.937	.698	3420	6	.260
	12.700	15.88	12.70	33.32	61.93	37.31		23.80	17.73	15213		.118
CTMD-10	.6250	.750	.562	1.500	2.625	1.594	5/8-18	1.125	.839	4620	8	.410
	15.875	19.05	14.27	38.10	66.68	40.49		28.58	21.31	20551		.186
CTMD-12	.7500	.875	.687	1.750	2.875	1.719	3/4-16	1.312	.978	6600	7	.640
	19.050	22.23	17.45	44.45	73.03	43.66		33.32	24.84	29358		.290

NOTES
1. To order left hand threaded units add letter “L” to part number prefix; Example: CTMDL-8.
2. Add letter “Y” to the part number suffix to indicate stud; Example: CTMD-8Y.
3. For design modifications, see page J-13.
4. Caution: Prolonged exposure to ultraviolet light can cause loss of mechanical properties in DELRIN® material. Consult Application Engineering for application assistance.

Sealmaster Spherical Plain Bearings

Sealmaster spherical plain bearings perform a similar function as rod end bearings and must be supported in a housing. Sealmaster spherical plain bearings are designed with a variety of outer race materials including steel, heat treated steel, bronze, stainless steel and heat treated stainless steel for flexibility in a wide range of application requirements. In addition Sealmaster spherical plain bearings can accommodate angular misalignment to provide ease in assembly and smooth motion transfer in a variety of applications.

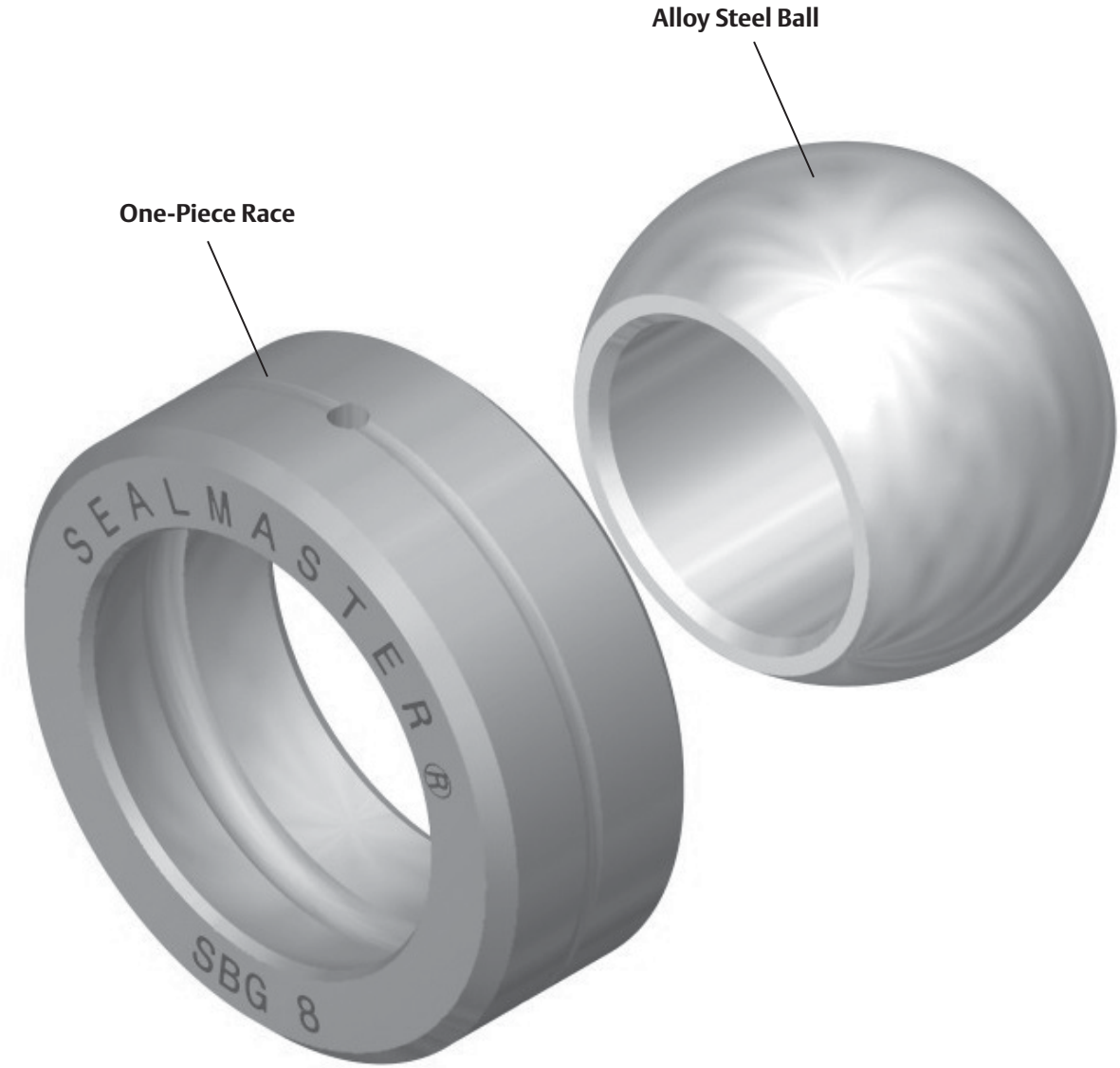

Spherical Plain Bearing Nomenclature

Series

- **SBG** - **S**pherical **B**earing **G**rooved Race OD
- **COM** - **Com**mercial
- **COR** - **Cor**rosion Resistant
- **BTS** - **B**ellow **T**ype **S**eal
- **BH** - **B**earing **H**eavy Duty
- **FLBG** - **B**earing **G**rooved Race OD

Bore Size

Number of 1/16" of inches (ex. 5 = 5/16")

Optional Suffix*

- S - Heat Treated Outer Race (SBG only)
- SS - Stainless Steel Outer Race and Ball (SBG only)
- A - Groove in Ball ID and Interconnection Hole (SBG-S only)
- LS - Low Carbon Steel Race (standard on BTS and BH)

SBG - 16 S

* Options listed may not be available on all sizes and configurations, refer to product tables or consult Application Engineering for more information.

Features and Benefits

One-piece Race

- Helps reduce pound-out in applications with high frequency oscillation, vibration or shock loading
- Improved spherical ball-race conformity for even load distribution
- Precision ball-race fit
- Outer race lubrication grooves and interconnecting hole in outer race to direct grease to the ball and race area. The outer races are chamfered to facilitate installation and retention into housings
- Steel, heat treated steel, stainless steel, and heat treated stainless steel materials

Ball

- Alloy steel heat treated and chrome plated for corrosion resistance
- Heat treated stainless steel balls for corrosion resistance

Multiple Configurations

Sealmaster SBG Precision Spherical Plain Bearings

- SBG series contain a bronze outer race and alloy steel, heat treated, chrome plated ball for wear resistance properties. This material combination provides for low coefficient of friction.

Sealmaster SBG-S Precision Spherical Plain Bearings

- SBG-S series utilize an alloy steel, heat treated outer race with protective coating for corrosion resistance and alloy steel, heat treated, chrome plated ball for wear resistance properties

Sealmaster SBG-SS Precision Spherical Plain Bearings

- SBG-SS series is manufactured with a 300 series stainless steel outer race for corrosion resistance and a stainless steel, heat treated ball for corrosion resistance.

Sealmaster SBG-SA Precision Spherical Plain Bearings

- SBG-SA series is the same as the SBG-S series and has a groove in ball ID and interconnecting hole to facilitate lubrication from the shaft into the bearing

Multiple Configurations continued

Sealmaster COR Precision Spherical Plain Bearings

- COR series spherical plain bearings have a stainless steel, heat treated outer race for strength and corrosion resistance and stainless steel, heat treated ball for corrosion resistance

Sealmaster FLBG Precision Spherical Plain Bearings

- FLBG series is available in with a carbon steel outer race with protective coating for corrosion resistance and bronze race. Also contains an alloy steel, heat treated, chrome plated ball for wear resistance properties

Sealmaster COM Commercial Series Spherical Plain Bearings

- Bore sizes from 3/16” to 1”
- Materials include a carbon steel outer race with protective coating for corrosion resistance with an alloy steel, heat treated, chrome plated ball for wear resistance properties
- Outer race lubrication grooves and interconnecting hole in outer race direct grease to the ball and race area. The outer races are chamfered to facilitate installation and retention into housings

Sealmaster BH-LS Heavy Duty Spherical Plain Bearings

- Heavy duty bearings with radial static load capacities up to 221,000 lbs.
- Available in 1”, 1-3/16”, 1-1/4”, 1-1/2”, 1-3/4” and 2” bore sizes
- Materials include a carbon steel outer race with protective coating for corrosion resistance and alloy steel, heat treated, chrome plated ball for wear resistance properties
- Outer race lubrication grooves and interconnecting hole in outer race direct grease to the ball and race area. The outer races are chamfered to facilitate installation and retention into housings.

Multiple Configurations continued

Sealmaster BTS-LS Sealed Spherical Plain Bearings

- This is a sealed design for applications where the bearing is exposed to dirt, dust, moisture and contaminants. They are available in four bore sizes (3/4", 1", 1-1/4" and 1-1/2")
- Materials include a carbon steel outer race with protective coating for corrosion resistance and alloy steel, heat treated, chrome plated ball for wear resistance properties
- Integral nitrile rubber "bellows type" seals misalign with the bearing and help reduce contaminant entry as well as seal in lubricant.
- Outer race lubrication grooves and interconnecting hole in outer race direct grease to the ball and race area. The outer races are chamfered to facilitate installation and retention into housings.

Design Modifications

Sealmaster spherical plain bearings can be ordered with the following design modifications at an extra cost.

Special Modifications	Design Modifications	Option Offered on These Series	Ordering Instructions and Example for Specifying
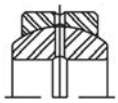	Groove on Ball I.D. and Interconnecting Hole	SBG	Add “A” to part number suffix Example: SBG-8A

Spherical Plain Bearings

SEALMASTER®

Basic Construction Type: 2 pc. General Purpose, Precision

Race Material: Variable, See Below

Ball Material: Variable, See Below

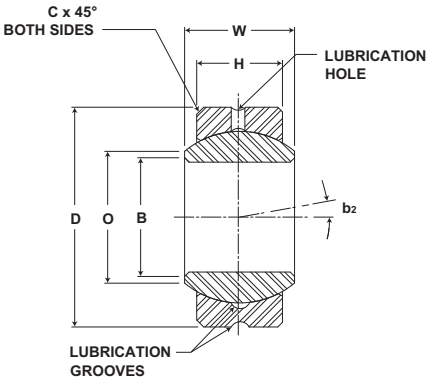

SBG, SBG-S, SBG-SA, SBG-SS Series Spherical Plain Bearings

Part No.	Part No.	Part No.	Part No.	Dimensions inch / mm							Max Static Radial Load lb/N				Misalignment Angle b_2	Unit Wt. lb/kg
				B	D	W	H	C	Ball Diam.	O						
				+.0000 -.0005	+.0000 -.0005	+.000 -.005	+.005 -.005	Ref.	Ref.	Ref.	SBG	SBG-S	SBG-SA	SBG-SS	Deg. +/-	
SBG-3	SBG-3S	-	SBG-3SS	.1900 4.826	.5625 14.288	.281 7.14	.218 5.54	.025 .64	.406 10.31	.293 7.44	2750 12233	6480 28824	-	4400 19572	11 1/2	.020 .009
SBG-4	SBG-4S	-	SBG-4SS	.2500 6.350	.6562 16.667	.343 8.71	.250 6.35	.025 .64	.500 12.70	.364 9.25	4200 18683	10000 44482	-	6700 29803	13 1/2	.020 .009
SBG-5	SBG-5S	-	SBG-5SS	.3125 7.938	.7500 19.050	.375 9.53	.281 7.14	.025 .64	.562 14.27	.419 10.64	5800 25800	13900 61830	-	9200 40924	12	.030 .014
SBG-6	SBG-6S	-	SBG-6SS	.3750 9.525	.8125 20.638	.406 10.31	.312 7.92	.030 .76	.656 16.66	.515 13.08	7750 34474	18700 83182	-	12400 55158	10	.040 .018
SBG-7	SBG-7S	-	SBG-7SS	.4375 11.113	.9062 23.017	.437 11.10	.343 8.71	.035 .89	.687 17.45	.530 13.46	9300 41368	22300 99195	-	14900 66279	9 1/2	.050 .023
SBG-8	SBG-8S	SBG-8SA	SBG-8SS	.5000 12.700	1.0000 25.400	.500 12.70	.390 9.91	.035 .89	.781 19.84	.600 15.24	11200 49820	26900 119657	26900 119657	17900 79623	10	.070 .032
SBG-10	SBG-10S	SBG-10SA	SBG-10SS	.6250 15.875	1.1875 30.163	.625 15.88	.500 12.70	.035 .89	.968 24.59	.739 18.77	20000 88964	48000 213515	48000 213515	32000 142343	9	.120 .054
SBG-12	SBG-12S	SBG-12SA	SBG-12SS	.7500 19.050	1.4375 36.513	.750 19.05	.593 15.06	.045 1.14	1.187 30.15	.920 23.37	30000 133447	78000 346961	78000 346961	48000 213515	9	.210 .095
SBG-14	SBG-14S	SBG-14SA	SBG-14SS	.8750 22.225	1.5625 39.688	.875 22.23	.703 17.86	.045 1.14	1.312 33.32	.980 24.89	43000 191274	103000 458167	103000 458167	69000 306927	9 1/2	.270 .122
SBG-16	SBG-16S	SBG-16SA	SBG-16SS	1.0000 25.400	1.7500 44.450	1.000 25.40	.797 20.24	.045 1.14	1.500 38.10	1.118 28.40	52000 231308	125000 556028	125000 556028	83000 369202	9 1/2	.380 .172

NOTES:
1. Add letter "A" to suffix to indicate cross drilled oil hole in ball and race and a grooved I.D. on ball.
2. For design modifications, see page J-31.
3. For mounting information, see Recommended Housing Bore Diameters page J-43.

Material Specifications

SBG
Outer Race - Aluminum bronze
Ball - Alloy steel, heat treated, chrome plated

SBG-S
Outer Race - Alloy steel, heat treated with protective plating for corrosion resistance
Ball - Alloy steel, heat treated, chrome plated

SBG-SA
Outer Race - Alloy steel, heat treated with protective plating for corrosion resistance
Ball - Alloy steel, heat treated, chrome plated

SBG-SS
Outer Race - 300 series stainless steel
Ball - Stainless steel, heat treated

Metric dimensions for reference only.
Not all parts are available from stock. Please contact customer service for availability (800) 626-2120.
For more information on bearing capabilities outside of our standard offering, please contact Application Engineering (800) 626-2093.

SEALMASTER® Spherical Plain Bearings

Basic Construction Type: 2 pc. Corrosion Resistant, Precision

Race Material: Stainless Steel, Heat Treated

Ball Material: Stainless Steel, Heat Treated

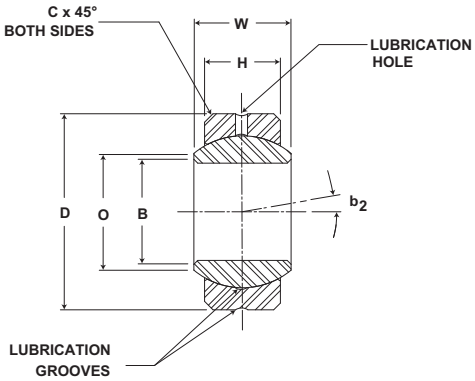

COR Series Spherical Plain Bearings

Part No.	Dimensions inch / mm							Max Static Radial Load	Misalignment Angle b_2	Unit Wt. lb/kg
	B	D	W	H	C	Ball Diam.	O			
	+.0000 -.0005	+.0000 -.0005	+.000 -.005	+.005 -.005	Ref.	Ref.	Ref.	lb/N	Deg. +/-	
COR-3	.1900	.5625	.281	.218	.025	.406	.293	4800	11 1/2	.020
	4.826	14.288	7.14	5.54	.64	10.31	7.44	21351		.009
COR-4	.2500	.6562	.343	.250	.025	.500	.364	7500	13 1/2	.020
	6.350	16.667	8.71	6.35	.64	12.70	9.25	33362		.009
COR-5	.3125	.7500	.375	.281	.025	.562	.419	10400	12	.030
	7.938	19.050	9.53	7.14	.64	14.27	10.64	46262		.014
COR-6	.3750	.8125	.406	.312	.030	.656	.515	14000	10	.040
	9.525	20.638	10.31	7.92	.76	16.66	13.08	62275		.018
COR-8	.5000	1.0000	.500	.390	.035	.781	.600	20000	10	.070
	12.700	25.400	12.70	9.91	.89	19.84	15.24	88964		.032
COR-10	.6250	1.1875	.625	.500	.035	.968	.739	36000	9	.120
	15.875	30.163	15.88	12.70	.89	24.59	18.77	160136		.054
COR-12	.7500	1.4375	.750	.593	.045	1.187	.920	54000	9	.210
	19.050	36.513	19.05	15.06	1.14	30.15	23.37	240204		.095
COR-14	.8750	1.5625	.875	.703	.045	1.312	.980	77000	9 1/2	.270
	22.225	39.688	22.23	17.86	1.14	33.32	24.89	342513		.122
COR-16	1.0000	1.7500	1.000	.797	.045	1.500	1.118	93500	9 1/2	.380
	25.400	44.450	25.40	20.24	1.14	38.10	28.40	415909		.172

NOTES
1. For mounting information, see Recommended Housing Bore Diameters, page J-43.

Metric dimensions for reference only.
Not all parts are available from stock. Please contact customer service for availability (800) 626-2120.
For more information on bearing capabilities outside of our standard offering, please contact Application Engineering (800) 626-2093.

Spherical Plain Bearings

SEALMASTER®

Basic Construction Type: 2 pc. General Purpose, Commercial

Race Material: Carbon Steel with Protective Plating for Corrosion Resistance

Ball Material: Alloy Steel, Heat Treated, Chrome Plated

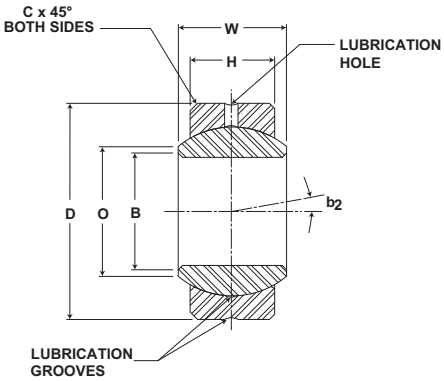

COM Series Spherical Plain Bearings

Part No.	Dimensions inch / mm							Max Static Radial Load lb/N	Misalignment Angle b_2	Unit Wt. lb/kg
	B	D	W	H	C	Ball Diam.	O			
	+.0015 -.0005	+.0000 -.0007	+.000 -.005	+.005 -.005	Ref.	Ref.	Ref.		Deg. +/-	
COM-3	.1900	.5625	.281	.218	.025	.406	.293	3250	11 1/2	.020
	4.826	14.288	7.14	5.54	.64	10.31	7.44	14457		.009
COM-4	.2500	.6562	.343	.250	.025	.500	.364	4900	13 1/2	.020
	6.350	16.667	8.71	6.35	.64	12.70	9.25	21796		.009
COM-5	.3125	.7500	.375	.281	.025	.562	.419	6450	12	.030
	7.938	19.050	9.53	7.14	.64	14.27	10.64	28691		.014
COM-6	.3750	.8125	.406	.312	.030	.656	.515	8250	10	.040
	9.525	20.638	10.31	7.92	.76	16.66	13.08	36698		.018
COM-7	.4375	.9062	.437	.343	.035	.687	.530	10200	9 1/2	.050
	11.113	23.017	11.10	8.71	.89	17.45	13.46	45372		.023
COM-8	.5000	1.0000	.500	.390	.035	.781	.600	13600	10	.070
	12.700	25.400	12.70	9.91	.89	19.84	15.24	60496		.032
COM-10	.6250	1.1875	.625	.500	.035	.968	.739	21000	9	.120
	15.875	30.163	15.88	12.70	.89	24.59	18.77	93413		.054
COM-12	.7500	1.4375	.750	.593	.045	1.187	.920	30000	9	.210
	19.050	36.513	19.05	15.06	1.14	30.15	23.37	133447		.095
COM-14	.8750	1.5625	.875	.703	.045	1.312	.980	41100	9 1/2	.270
	22.225	39.688	22.23	17.86	1.14	33.32	24.89	182822		.122
COM-16	1.0000	1.7500	1.000	.797	.045	1.500	1.118	54700	9 1/2	.380
	25.400	44.450	25.40	20.24	1.14	38.10	28.40	243318		.172

NOTES
1. For mounting information, see Recommended Housing Bore Diameters, page J-43.

SEALMASTER® Spherical Plain Bearings

Basic Construction Type: 3 pc. General Purpose, Precision

Outer Member Material: Carbon Steel with Protective Plating for Corrosion Resistance

Race Material: Bronze

Ball Material: Alloy Steel, Heat Treated, Chrome Plated

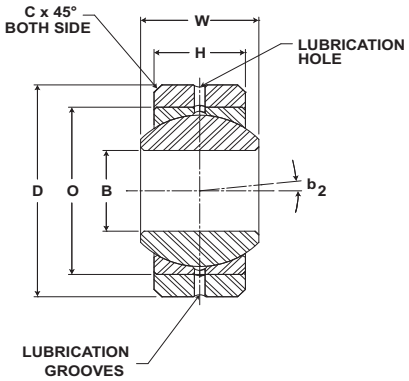

FLBG Series Spherical Plain Bearings

Part No.	Dimensions inch / mm							Max Static Radial Load lb/N	Misalignment Angle b_2	Unit Wt. lb/kg
	B	D	W	H	C	Ball Diam.	O			
	+.0000 -.0005	+.0000 -.0005	+.000 -.005	+.005 -.005	Ref.	Ref.	Ref.		Deg. +/-	
FLBG-3	.1900	.6250	.281	.187	.020	.406	.293	2960	16 1/2	.020
	4.826	15.875	7.14	4.75	.51	10.31	7.44	13167		.009
FLBG-4	.2500	.7500	.375	.281	.020	.500	.331	5240	14 1/2	.040
	6.350	19.050	9.53	7.14	.51	12.70	8.41	23309		.018
FLBG-5	.3125	.8750	.437	.313	.025	.625	.447	6550	14 1/2	.050
	7.938	22.225	11.10	7.95	.64	15.88	11.35	29136		.023
FLBG-6	.3750	1.0000	.500	.375	.025	.718	.517	8600	12 1/2	.080
	9.525	25.400	12.70	9.53	.64	18.24	13.13	38255		.036
FLBG-7	.4375	1.1875	.562	.437	.040	.812	.586	11100	11	.120
	11.113	30.163	14.27	11.10	1.02	20.62	14.88	49375		.054
FLBG-8	.5000	1.3125	.687	.531	.045	.937	.637	15600	12 1/2	.180
	12.700	33.338	17.45	13.49	1.14	23.80	16.18	69392		.082
FLBG-10	.6250	1.5625	.875	.687	.045	1.187	.802	25700	12	.330
	15.875	39.688	22.23	17.45	1.14	30.15	20.37	114319		.150
FLBG-12	.7500	2.2500	1.250	.937	.050	1.625	1.038	47600	15	.970
	19.050	57.150	31.75	23.80	1.27	41.28	26.37	211735		.440
FLBG-16	1.0000	2.3750	1.125	.875	.065	1.750	1.345	48200	10	.940
	25.400	60.325	28.58	22.23	1.65	44.45	34.16	214404		.426

NOTES
1. For mounting information, see Recommended Housing Bore Diameters, page J-43.

Metric dimensions for reference only.
Not all parts are available from stock. Please contact customer service for availability (800) 626-2120.
For more information on bearing capabilities outside of our standard offering, please contact Application Engineering (800) 626-2093.

Spherical Plain Bearings

SEALMASTER®

Basic Construction Type: 2 pc. Heavy Duty, Precision

Race Material: Carbon Steel with Protective Plating for Corrosion Resistance

Ball Material: Alloy Steel, Heat Treated, Chrome Plated

Feature: Nitrile Rubber Seals

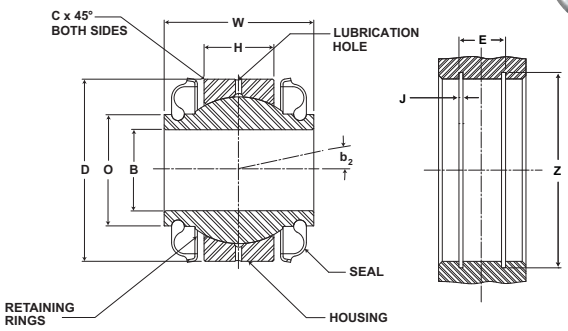

BTS-LS Series Spherical Plain Bearings

Part No.	Dimensions inch / mm											Max Static Radial Load lb/N	Misalignment Angle b_2 Deg. +/-	Unit Wt. lb/kg	Recommended Snap Ring
	B	D	W	H	C	Ball Diam.	O	Housing Width	E	Z	J				
	+.0000 -.0007	+.0000 -.0007	+.000 -.005	+.005 -.005	Ref.	Ref.	Ref.		Groove Spacing	Groove Diam.	Groove Width				
BTS-12LS	.7500 19.050	1.5000 38.100	1.250 31.75	.500 12.70	.015 .38	1.250 31.75	1.000 25.40	1.250 31.75	.507 12.88	1.576/1.584 40.03/40.23	.056/.060 1.42/1.52	31500 140119	13 1/2	.250 .113	TRUARC #5000-150
										1.551/1.556 39.4/39.52	.045/.048 1.14/1.22				SPIROLOX #RR-150
BTS-16LS	1.0000 25.400	2.2500 57.150	1.875 47.63	.875 22.23	.015 .38	1.813 46.05	1.375 34.93	1.687 42.85	.882 22.40	2.364/2.376 60.05/60.35	.086/.091 2.18/2.31	83500 371427	12	.950 .431	TRUARC #5000-225
										2.324/2.330 59.03/59.18	.055/.058 1.4/1.47				SPIROLOX #RR-225
BTS-20LS	1.2500 31.750	2.3750 60.325	1.875 47.63	.875 22.23	.015 .38	2.000 50.80	1.625 41.28	1.687 42.85	.882 22.40	2.499/2.511 63.47/63.78	.086/.091 2.18/2.31	94000 418133	9 1/2	.990 .449	TRUARC #5000-237
										2.453/2.459 62.31/62.46	.055/.058 1.4/1.47				SPIROLOX #RR-237
BTS-24LS	1.5000 38.100	2.7500 69.850	1.875 47.63	1.000 25.40	.015 .38	2.375 60.33	2.000 50.80	1.875 47.63	1.007 25.58	2.894/2.906 73.51/73.81	.103/.108 2.62/2.74	130000 578269	7 1/2	1.440 .653	TRUARC #5000-275
										2.841/2.847 72.16/72.31	.055/.058 1.4/1.47				SPIROLOX #RR-275

NOTES
1. Retaining rings are NOT furnished with the bearings.
2. For mounting information, see Recommended Housing Bore Diameters, page J-43.

SEALMASTER® Spherical Plain Bearings

Basic Construction Type: 2 pc. Heavy Duty, Precision

Race Material: Carbon Steel with Protective Plating for Corrosion Resistance

Ball Material: Alloy Steel, Heat Treated, Chrome Plated

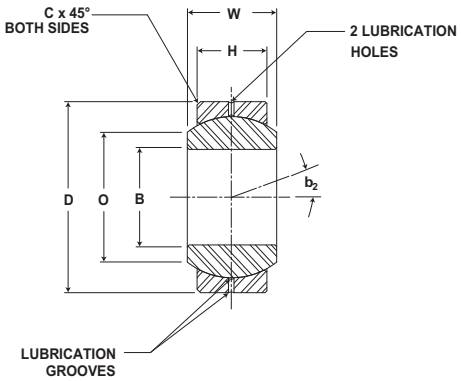

BH-LS Series Spherical Plain Bearings

Part No.	Dimensions inch / mm							Max Static Radial Load lb/N	Misalignment Angle b_2	Unit Wt. lb/kg
	B	D	W	H	C	Ball Diam.	O			
	+.0000 -.0007	+.0000 -.0007	+.000 -.005	+.007 -.007	Ref.	Ref.	Ref.		Deg. +/-	
BH-16LS	1.0000 25.400	2.0000 50.800	1.000 25.40	.781 19.84	.035 .89	1.687 42.85	1.360 34.54	69500 309151	9	.550 .249
BH-19LS	1.1875 30.163	2.3750 60.325	1.187 30.15	.937 23.80	.035 .89	2.000 50.80	1.610 40.89	100000 444822	8 1/2	.940 .426
BH-20LS	1.2500 31.750	2.3750 60.325	1.187 30.15	.937 23.80	.035 .89	2.000 50.80	1.610 40.89	100000 444822	8 1/2	.900 .408
BH-24LS	1.5000 38.100	2.7500 69.850	1.375 34.93	1.094 27.79	.035 .89	2.312 58.72	1.860 47.24	135000 600510	8	1.360 .617
BH-28LS	1.7500 44.450	3.1250 79.375	1.562 39.67	1.250 31.75	.040 1.02	2.625 66.68	2.110 53.59	178000 791783	8	1.950 .885
BH-32LS	2.0000 50.800	3.5000 88.900	1.750 44.45	1.375 34.93	.040 1.02	2.937 74.60	2.360 59.94	221000 983057	8 1/2	2.640 1.197

NOTES
1. For mounting information, see Recommended Housing Bore Diameters, page J-43.

Metric dimensions for reference only.
Not all parts are available from stock. Please contact customer service for availability (800) 626-2120.
For more information on bearing capabilities outside of our standard offering, please contact Application Engineering (800) 626-2093.

Rod Ends and Spherical Plain Bearing Engineering Section

Sealmaster Rods Ends with Y-Studs

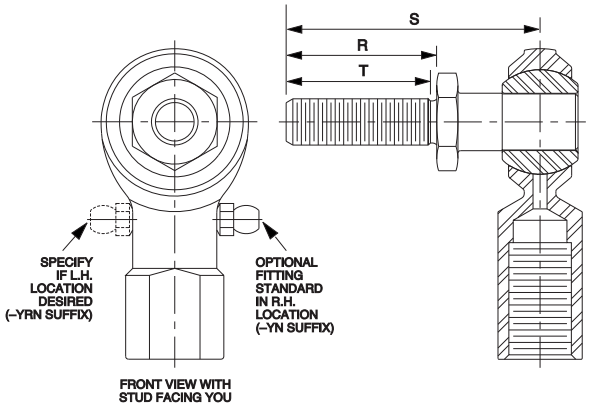

Stud Size	Dimensions in inch			
	R +.031 -.031	S +.031 -.031	T Min.	Thread Size Class UNF-2A
-3	.500	.968	7/16	#10-32
-4	.562	1.047	1/2	1/4-28
-5	.687	1.234	19/32	5/16-24
-6	.906	1.540	13/16	3/8-24
-7	1.125	1.930	1	7/16-20
-8	1.125	2.000	1	1/2-20
-10	1.500	2.500	1 3/8	5/8-18
-12	1.812	3.000	1 5/8	3/4-16

Rod Ends with Y-Studs are available in the following series:

CTFD-Y, CTFDL-Y
CTMD-Y, CTMDL-Y
CFF-Y, CFFL-Y
CFF-YN, CFFL-YN
CFM-Y, CFML-Y
CFM-YN, CFML-YN
CFF-TY, CFFL-TY
CFM-TY, CFML-TY
TF-Y, TFL-Y
TF-YN, TFL-YN
TM-Y, TML-Y
TM-YN, TML-YN
TR-Y, TRL-Y
TR-YN, TRL-YN
TRE-Y, TREL-Y
TRE-YN, TREL-YN

- Sealmaster Y-studs are available with the above rod end series to facilitate right angle connections in a variety of linkage applications.
- To order, add the letter Y to the rod end part number; Example: TR-8Y.
- Sealmaster Y-studs are manufactured from carbon steel and plated for corrosion resistance.
- They are secured in the rod end bore, threaded and manufactured with a hex wrench flat.
- Rod ends with Y-studs can accommodate up to ± 25 degrees of angular misalignment in any direction for linkage design flexibility.
- Y-stud thread sizes are the same as the corresponding rod end and are available in right hand threads only.

Caution: When selecting rod ends with Y-studs: Catalog load ratings are not applicable with Y-studs because of the reduced stud strength due to bending. For load ratings with Y-studs contact Application Engineering.

Rod Ends and Spherical Plain Bearing Engineering Section

Sealmaster rod ends can be joined together or connected with a threaded rod or tube to form linkage assemblies allowing design engineers flexibility in transferring motion between points with long center distances.

Normal operation of rod ends results in wear of the raceways or fatigue or fracture of the outer member. Give consideration to this in the design of the equipment. Spherical plain bearings provide a similar function as rod ends and must be supported in a housing. Spherical plain bearings afford customers greater load rating per equivalent rod end bore size. This occurs because rod end load capacity is controlled by the head and shank geometry. Spherical plain bearings have a larger bearing area and generally are less restricted by the housing material or dimensions in which they are mounted.

Load Ratings
Rod Ends

Static radial load ratings are applied perpendicular to the bearing ball bore and are a function of strength of race and housing materials. Sealmaster static load ratings listed in this catalog are maximum working loads and factors of safety should be applied as necessary. External conditions including mounting components, bolts, pins and housings should be considered separately when designing this product into an application. Static axial load ratings are applied parallel or through the bearing ball bore. In general, rod ends are not intended to carry axial loads. Applications of rod ends with axial loading should be reviewed with Application Engineering.

Spherical Bearings

Static radial load ratings listed in the catalog are based on a maximum permanent set in the bearing race of .2% of normal ball diameter.

Static axial load ratings are approximately 20% of the radial static load ratings listed with each unit. Caution should be exercised in designing adequate housings to support spherical bearings.

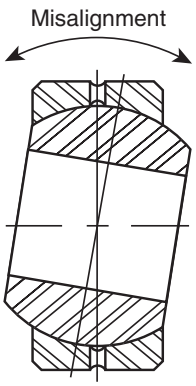

Angular Misalignment

Sealmaster rod ends and spherical plain bearings are primarily selected for their ability to withstand misalignment. As an example, a rod end and a shaft may not always be positioned at right angles and misalignment capability is important. Misalignment can occur through wear, tolerance build-up, structural deflection, or in design. The angle of misalignment in a rod end is controlled by the outside diameter of the head and ball width. The maximum degree of misalignment is obtained when the head contacts the inside of the fork or clevis in which it is mounted. Greater than catalog misalignment can be accomplished by adding a spacer washer between the ball flat and the clevis I.D. or by selecting a rod end with a Y-Stud. The angle of misalignment in a spherical bearing is calculated somewhat differently than a rod end. Illustrated on the following page are common mountings for spherical bearings and the corresponding formula for calculating the angle of misalignment.

Rod Ends and Spherical Plain Bearing Engineering Section

Spherical Plain Bearing Misalignment Capabilities

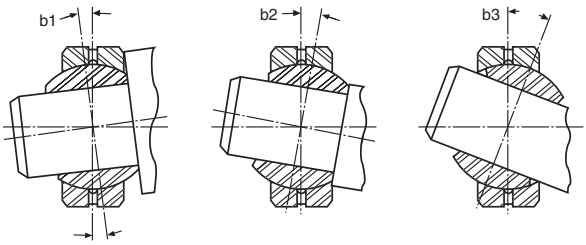

SERIES SBG, SBG-S, SBG-SS, SBG-SA, COM, COR (degrees)			
PART NO.	(+/-) b1	(+/-) b2	(+/-) b3
-3	7 1/2	11 1/2	29 1/2
-4	9	13 1/2	30
-5	8	12	26
-6	7 1/2	10	26 1/2
-7	6 1/2	9 1/2	20 1/2
-8	7	10	20
-10	6 1/2	9	18 1/2
-12	7	9	21
-14	7	9 1/2	16
-16	7	9 1/2	16

SERIES FLBG (degrees)			
PART NO.	(+/-) b1	(+/-) b2	(+/-) b3
-3	9 1/2	16 1/2	34 1/2
-4	8	14 1/2	26
-5	9	14 1/2	30
-6	8	12 1/2	27
-7	6 1/2	11	25
-8	7 1/2	12 1/2	23
-10	7 1/2	12	23
-12	8 1/2	15	27 1/2
-16	6 1/2	10	25

SERIES BH-LS (degrees)			
PART NO.	(+/-) b1	(+/-) b2	(+/-) b3
-16	6 1/2	9	26
-19	6 1/2	8 1/2	25 1/2
-20	6 1/2	8 1/2	23 1/2
-24	6	8	21 1/2
-28	6	8	20
-32	6 1/2	8 1/2	19

SERIES BTS-LS (degrees)			
PART NO.	(+/-) b1	(+/-) b2	(+/-) b3
-12	-	13 1/2	-
-16	-	12	-
-20	-	9 1/2	-
-24	-	7 1/2	-

Rod End Misalignment Capabilities

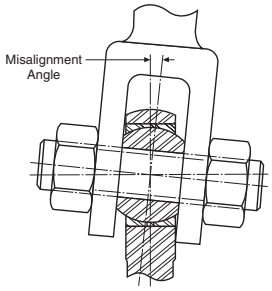

SERIES AR, ARE, ARE-20, TR, TRE, CFF-T, CFM-T, TF, TM, CFF, CFM, CTFD, CTMD (degrees)	
PART NO.	(+/-) a
-3	6 1/2
-4	8
-5	7
-6	6
-7	7
-8	6
-10	8
-12	7
-16	8 1/2

Reference Letters

B = Bore of Ball
C = Chamfer on Outer Race
D = Head or Diameter of Outer Race
E = Ball Diameter
H = Housing Width
$V = \sqrt{(D-2C)^2 + H^2}$
W = Ball Width

Rod Ends and Spherical Plain Bearing Engineering Section

Common Retention Methods

Clevis mounting is a common practice in securing rod ends in an application. Generally they are assembled into the clevis (or yoke) with a bolt or machined pin.

Clevis Installation

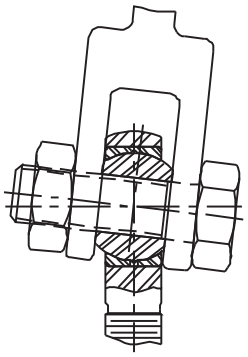

Shoulder on Shaft with Lock Nut

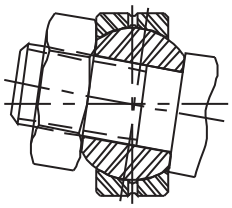

Rod End Grease Fitting Table			
Bore Size	Fitting Number	Thread Size	Hex size
1/4” - 7/16”	#3018 (no ball check)	#6-40 UNF-2A	1/4”
1/2” - 1”	#3016 (no ball check)	#10-32 UNF-2A	1/4”

Lubrication

Sealmaster metal three-piece rod ends are greased from the factory and can be furnished with grease fittings on sizes #4 through #16 to facilitate relubrication in the field. Sealmaster CFF/CFM two-piece rod ends are oil coated and are also available with grease fittings. Sealmaster spherical bearings are oil coated except the stainless steel series which are dry. The BH-LS and BTS-LS series are greased from the factory.

Periodic relubrication helps prevent excessive wear, protects balls and races from corrosion, purges contamination and wear debris and helps to seal against contamination. Relubrication is recommended whenever possible for most applications. The length of interval between greasing is dependent on the application parameters and external conditions. Self-Lubricating PTFE and Delrin* rod ends are generally used where grease relubrication is not practical or desirable. Zerk type threaded grease fittings (designated as “N” suffix) are available on all rod end series except for PTFE and DELRIN. Replacement grease fittings can be ordered by identifying the appropriate rod end series and size.

Caution: Catalog load ratings of rod ends are not applicable when grease fittings are specified, because of the reduced cross section of the head. When selecting rod ends with grease fittings, consult Application Engineering for static load capacities.

* The following trade names, trademarks and/or registered trademarks are used in this material by Regal Power Transmission Solutions are NOT owned or controlled by Regal Power Transmission Solutions and are believed to be owned by the following parties: Delrin;E.I. du Pont de Nemurs and Company. Regal Power Transmission Solutions cannot and does not represent or warrant the accuracy of this information.

Rod Ends and Spherical Plain Bearing Engineering Section

Sealmaster spherical plain bearings are manufactured with two lubrication systems which provide a path for lubrication to the ball and race area.

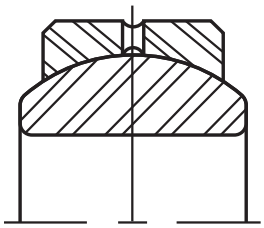

Outer races are manufactured with lubrication grooves and an interconnecting hole in the outer race to direct grease to the ball and race area. Standard on the following series: COM, SBG, SBG-S, SBG-SS, COR, FLBG, HH-LS, BTS-LS

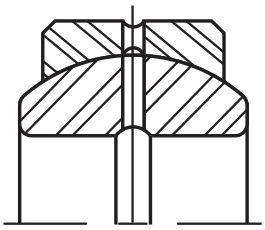

A groove on the ball I.D. and interconnecting hole on “A” series only, directs lubrication from the shaft to the ball and race area. Standard on the SBG-SA

Application

Sealmaster rod ends and spherical plain bearings are designed to provide an efficient smooth transfer of motion in a wide variety of applications and equipment. This motion is usually associated with various types of linkage controls. Commonly referred to as plain or sliding bearings, they are designed primarily to assist and provide motion transfer, support a load, allow for angular motion and angular misalignment. Sealmaster rod ends and spherical bearings serve the industrial market. Typical applications for rod ends and spherical plain bearings can be found in:

- Textile Equipment
- Food Processing
- Bakery Equipment
- Recreational Equipment
- Farm/Garden Machinery
- Bottling Equipment
- Printing Machinery
- Material Handling
- Mining Machinery
- Packaging Machinery
- Labeling Machinery
- Industrial Fans
- Construction Equipment
- Exercise Machines
- Dairy Machinery
- Agricultural Equipment
- Transportation Equipment
- Off-Road Equipment

Rod Ends and Spherical Plain Bearing Engineering Section

Recommended Housing Diameters - Spherical Plain Bearings

Spherical Bearings		Housing Bore (inch)			
Series	Bearing O.D.	Steel Housing		Aluminum Housing	
SBG, SBG-S, SBG-SS, SBG-SA	+.0000 -.0005	Min	Max	Min	Max
3	.5625	.5616	.5620	.5614	.5619
4	.6562	.6553	.6557	.6551	.6556
5	.7500	.7491	.7495	.7489	.7494
6	.8125	.8116	.8120	.8114	.8119
7	.9062	.9053	.9057	.9051	.9056
8	1.0000	.9991	.9995	.9989	.9994
10	1.1875	1.1866	1.1870	1.1864	1.1869
12	1.4375	1.4366	1.4370	1.4364	1.4369
14	1.5625	1.5616	1.5620	1.5614	1.5619
16	1.7500	1.7491	1.7495	1.7489	1.7494
FLBG	+.0000 -.0005	Min	Max	Min	Max
3	.6250	.6241	.6245	.6239	.6244
4	.7500	.7491	.7495	.7489	.7494
5	.8750	.8741	.8745	.8739	.8744
6	1.0000	.9991	.9995	.9989	.9994
7	1.1875	1.1865	1.1870	1.1863	1.1869
8	1.3125	1.3115	1.3120	1.3113	1.3119
10	1.5625	1.5613	1.5620	1.5611	1.5619
12	2.2500	2.2488	2.2495	2.2486	2.2494
16	2.3750	2.3738	2.3745	2.3736	2.3744
COM	+.0000 -.0007	Min	Max	Min	Max
3	.5625	.5615	.5619	.5613	.5618
4	.6562	.6552	.6556	.6550	.6555
5	.7500	.7490	.7494	.7488	.7493
6	.8125	.8115	.8119	.8113	.8118
7	.9062	.9052	.9056	.9050	.9055
8	1.0000	.9990	.9994	.9988	.9993
10	1.1875	1.1864	1.1869	1.1862	1.1868
12	1.4375	1.4364	1.4369	1.4362	1.4368
14	1.5625	1.5614	1.5619	1.5612	1.5618
16	1.7500	1.7489	1.7494	1.7487	1.7493

Spherical Bearings		Housing Bore (inch)			
Series	Bearing O.D.	Steel Housing		Aluminum Housing	
COR	+.0000 -.0005	Min	Max	Min	Max
3	.5625	.5616	.5620	.5614	.5619
4	.6562	.6553	.6557	.6551	.6556
5	.7500	.7491	.7495	.7489	.7494
6	.8125	.8116	.8120	.8114	.8119
8	1.0000	.9991	.9995	.9989	.9994
10	1.1875	1.1866	1.1870	1.1864	1.1869
12	1.4375	1.4366	1.4370	1.4364	1.4369
14	1.5625	1.5616	1.5620	1.5614	1.5619
16	1.7500	1.7491	1.7495	1.7489	1.7494
BTS-LS	+.0000 -.0007	Min	Max	Min	Max
12	1.5000	1.4988	1.4993	1.4986	1.4992
16	2.2500	2.2488	2.2493	2.2486	2.2492
20	2.3750	2.3738	2.3743	2.3736	2.3742
24	2.7500	2.7488	2.7493	2.7486	2.7492
BH-LS	+.0000 -.0007	Min	Max	Min	Max
16	2.0000	1.9988	1.9993	1.9986	1.9992
19	2.3750	2.3738	2.3743	2.3736	2.3742
20	2.3750	2.3738	2.3743	2.3736	2.3742
24	2.7500	2.7488	2.7493	2.7486	2.7492
28	3.1250	3.1238	3.1243	3.1236	2.1242
32	3.5000	3.4988	3.4993	3.4986	3.4992

SEALMASTER®

Rod Ends and Spherical Plain Bearings

Application Inquiry Worksheet

Company Name _____ Contact _____

Address _____ Phone _____

_____ Fax _____

Date _____

I. Application

❑ Currently in use (if current application, what bearings are now being used?)

❑ New _____

Manufacturer _____ Manufacturer's Part No. _____

Your Company's Part No. _____ Application Detail _____

II. Engineering Detail

❑ Rod End ❑ 2 pc ❑ Steel Race ❑ DELRIN Race ❑ Spherical Bearing ❑ 3 pc ❑ Bronze Race ❑ TEFLON Liner

Misalignment Angle _____ (Degrees)

Radial Clearance _____ (Min/Max)

Axial Clearance _____ (Min/Max)

Preload Torque (lined rod ends only)_____ Min _____ Max_____

Materials: Ball _____ Race _____ Housing _____

Protective Finish: Ball _____ Race _____ Housing _____

❑ Solid Film ❑ Race ID ❑ Ball ID ❑ Ball & Race ID ❑ Grease (specify)

III. Operating Conditions

❑ Radial _____ Lbs.

❑ Axial _____ Lbs.

Type: ❑ Reversing ❑ Alternating ❑ Unidirectional ❑ Vibrating ❑ Static

Operating Temperature Range _____

Operating Speeds _____

Motion_____(Degrees/Cycle)

Environmental Conditions: ❑ Dry ❑ Moisture ❑ Corrosive ❑ Contamination

Bearing Life Required_____

Remarks - Specify bearing dimensions on separate sheet or attach part drawing if available.

Fax your application worksheet to: Application Engineering 219-465-2263.

Customer Signature _____ Date _____

Female Rod End

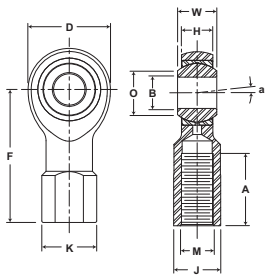

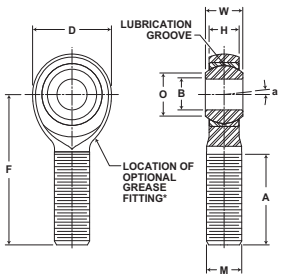

Male Rod End

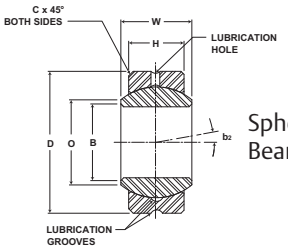

Spherical Bearing

	Bore B	Ball Width W	Housing Width H	Head Dia. D	Length to Ctr. of Ball F	Thread Length A	Thread Size M	Base Dia. K	Across Wrench Flats J	Ball Dia.	Ball Flat Dia. O	Misalign-ment Angle a
Male												
Female												

Bore B	Chamfer C Ref	Outside Dia D	Ball Width. W	Race Width H	Ball Dia.	Ball Flat Dia. O	Misalign-ment Angle a


CRES
CORROSION RESISTANT ENGINEERED SOLUTIONS

CRES Bearings

Corrosion Resistant Engineered Solutions (CRES) bearings address various industries and applications by providing multiple solutions utilizing a variety of materials and sealing elements. CRES bearings assist customers in meeting HACCP (Hazardous Analysis and Critical Control Point) procedures and stringent plant cleaning requirements including both CIP (Clean in Place) and SIP (Steam in Place).

CRES Bearing Selection Guide

Cam Followers

Brand	Image	Series	Style	Duty	Type
McGill		CRES CAMROL	CF-CR	Standard	Stud
			CCF-CR		
			CFE-CR		
			CCFE-CR		
			CYR-CR		Yoke
			CCYR-CR		

Mounted Roller Bearings

Brand	Image	Series	Housing Style	Duty
Sealmaster		RPB-C2 CR	Two Bolt Pillow Block	Standard
		RPB-C4 CR	Four Bolt Pillow Block	
		RFB-CR	Four Bolt Flange	

Mounted Ball Bearings

Brand	Image	Series	Housing Style	Duty
Sealmaster		CRPS-PN	Pillow Block	Standard
		CRFS-PN	Four Bolt Flange	
		CRFTS-PN	Two Bolt Flange	

			Material			Size Range		
O.D.	Eccentric	Mounting	Inner and Outer Material	Rolling Element Material	Seal	Inch	Section Name	Pages
Cylindrical	N/A	Hex Hole	440C Stainless Steel	440C Stainless Steel	LUBRI-DISC (up through 7/8" size) LUBRI-DISC+ (1" size and larger)	3/4" - 2 1/4"	CRES Cam Follower	K-13 to K-16
Crowned								
Cylindrical	Eccentric							
Crowned								
Cylindrical	N/A	Yoke Style						K-17 to K-18
Crowned								

Lock Type		Material			Size Range			
Single Lock Collar	Double Lock Collar	Inner and Outer Material	Rolling Element Material	Seal	Inch	Metric	Section Name	Pages
RPBA-C2 CR	RPB-C2 CR	Inner Ring: 52100 Steel	52100 Steel	Contact	1 3/16" - 3 1/2"	35 mm - 95 mm	RPB-CR Series Mounted Roller Bearings	K-23 to K-24
RPBA-C4 CR	RPB-C4 CR				2 1/4" - 5"	60 mm - 125 mm		K-25 to K-26
RFBA-CR	RFB-CR				1 3/16" - 4"	35 mm - 105 mm		K-27 to K-28

Lock Type		Material				Size Range			
Setscrew	Concentric	Housing Material	Inner and Outer Material	Rolling Element Material	Seal	Inch	Metric	Section Name	Pages
CRPS-PN	CRPS-PN-T	316 Stainless Steel	Phosphorus Nickel Coated 52100 Steel	52100 Steel	High Performance Seal (HPS)	3/4" - 2 7/16"	20 mm - 60 mm	PN Gold Mounted Ball Bearings	K-35 to K-36
CRFS-PN	CRFS-PN-T					3/4" - 2 7/16"	20 mm - 60 mm		K-37 to K-38
CRFTS-PN	CRFTS-PN-T					3/4" - 2 3/16"	20 mm - 55 mm		K-39 to K-40

CRES Bearing Selection Guide Cont.

Mounted Ball Bearings

Brand	Image	Series	Housing Style	Duty
Sealmaster		CRBFRS-PN	Four Bolt Flange Reduced	Standard
		CRBFTRS-PN	Two Bolt Flange Reduced	
		CRFBS-PN	Flange Bracket	
		CRPC-PN	Pillow Block	
		CRTBC-PN	Tapped Base Pillow Block	
		CRFC-PN	Four Bolt Flange	
		CRFTC-PN	Two Bolt Flange	
		CRPLF-PN	Pillow Block - Low Base	
		CRTBF-PN	Tapped Base Pillow Block	
		CRFCF-PN	Piloted Flange Cartridge	
		CREHBF-PN	Hanger Bearing - External Lube	
		CRSTF-PN	Wide Slot Take Up	
		PN	Insert	
		ERX-PN	ER Style	
		NP-C CR	Pillow Block	
		SF-C CR	Four Bolt Flange	
		SFT-C CR	Two Bolt Flange	
		FB-C CR	Flange Bracket	

Lock Type		Material				Size Range			
Setscrew	Concentric	Housing Material	Inner and Outer Material	Rolling Element Material	Seal	Inch	Metric	Section Name	Pages
	CRBFRS-PN-T	316 Stainless Steel	Phosphorus Nickel Coated 52100 Steel	52100 Steel	High Performance Seal (HPS)	1 7/16" - 1 1/2"	40 mm	PN Gold Mounted Ball Bearings	K-41
	CRBFTRS-PN-T					1 7/16" - 1 1/2"	40 mm		K-42
CRFBS-PN	CRFBS-PN-T					3/4" - 1 7/16"	20 mm - 35 mm		K-43 to K-44
CRPC-PN	CRPC-PN-T	High Strength Composite				3/4" - 1 1/2"	20 mm - 40 mm		K-45 to K-46
CRTBC-PN	CRTBC-PN-T					3/4" - 1 1/2"	20 mm - 40 mm		K-47 to K-48
CRFC-PN	CRFC-PN-T					3/4" - 1 1/2"	20 mm - 40 mm		K-49 to K-50
CRFTC-PN	CRFTC-PN-T					3/4" - 1 1/2"	20 mm - 40 mm		K-51 to K-52
CRPLF-PN		Fluoropolymer Coated Cast Iron				1" - 2 3/16"	30 mm - 55 mm		K-53
CRTBF-PN						3/4" - 2"	20 mm - 50 mm		K-54
CRFCF-PN						1 3/16" - 2 7/16"	30 mm - 60 mm		K-55
CREHBF-PN						1" - 2 7/16"			K-56
CRSTF-PN						3/4" - 2 7/16"	20 mm - 60 mm		K-57
PN	PN-T	N/A				3/4" - 2 7/16"	20 mm - 60 mm		K-58 to K-59
ERX-PN	ERX-PN-T					1/2" - 2 1/2"	20 mm - 60 mm	ERX-TREME PN Gold Style Ball Bearings	K-65 to K-66
NP-C CR	N/A	316 Stainless Steel	Black Oxide 52100 Steel	52100 Steel	Single Lip Rubber Contact Seal	3/4" - 2 7/16"		CR Gold Mounted Ball Bearings	K-71
SF-C CR						3/4" - 2 7/16"			K-72
SFT-C CR						3/4" - 2 3/16"			K-73
FB-C CR						3/4" - 1 7/16"			K-74

McGill CRES Cam Follower Bearings

McGill CAMROL® bearings are full complement needle bearings featuring 400 series corrosion resistant steel material and are available in two basic mounting styles for use mechanical automation or linear motion applications. Our basic features each contribute to superior performance, while the LUBRI-DISC® and LUBRI-DISC +® seal feature helps prevent metal to metal contact within the bearing while providing a barrier for contaminant entry while still providing blowout protection when relubricating. In addition to the seal feature these bearings are available with several dimensional choices and combinations to provide a specific solution for the application. Within the following section you can learn more about these features and how the can be applied to your application.

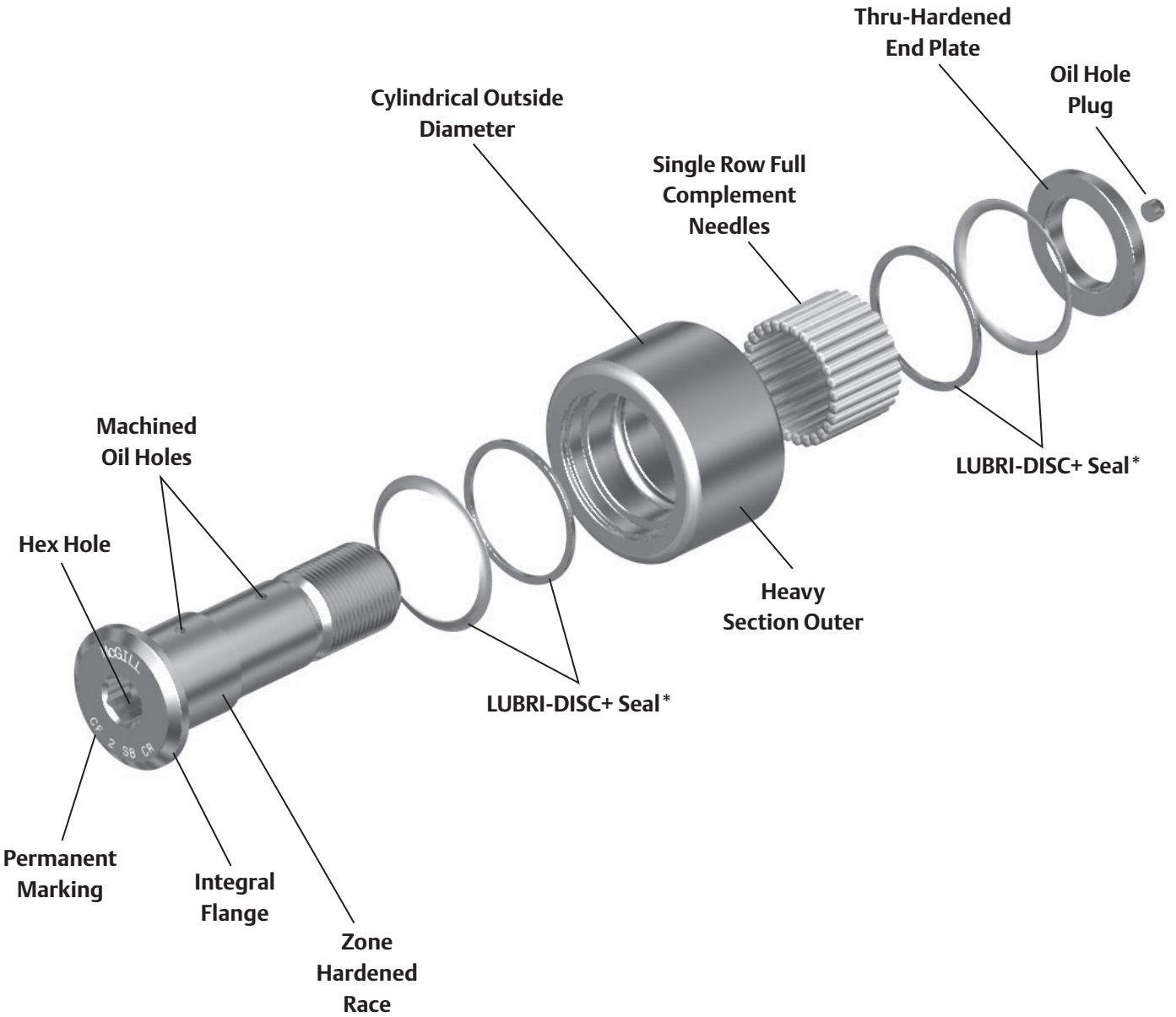

*LUBRI-DISC+ seal is used on bearings with a 1" O.D. and larger. Smaller sizes use LUBRI-DISC seals.

Cam Follower CRES Nomenclature

Basic Type, Construction
- CF - Cam Follower
- CYR - Cam Yoke Roller

Construction Suffix
- E - Eccentric Bushing (Stud Type Only)

Size
- O.D. In Inches

Standard Suffix
- S - LUBRI-DISC+ Seal*
- B - Broach (Hex Hole), (Stud Type Only)

Material
- CR - Corrosion Resistant (400 Series Corrosion Resistant Steel)

CFE - 1 1/2 - SB CR

*LUBRI-DISC+ seal is used on bearings with a 1" O.D. and larger. Smaller sizes use LUBRI-DISC seals.

Features and Benefits

400 Series Corrosion Resistant Steel

Manufactured from bearing quality 400 series corrosion resistant steel components for improved resistance to both external and internal corrosion. CRES CAMROL bearings are dimensionally interchangeable with standard CAMROL® bearings and easily identifiable with "CR" designation

Single Row Full Complement Needle Rollers

The small roller diameter to length ratio of needle rollers provides the maximum amount of rollers, with minimal radial section, which helps support radial loads with minimal deflection. The CRES series also incorporate 400 series corrosion resistant steel needles providing a balance between corrosion resistance and bearing capacity.

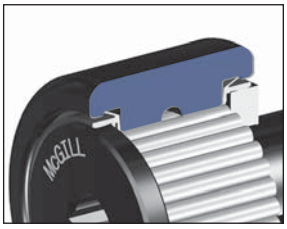

Heavy Section Outer

The heavy section outer helps support radial loading and provide proper rolling element support.

LUBRI-DISC+ SEAL

The LUBRI-DISC®+ seal is provided in sizes 1" and larger and offers a lip wiping seal for improved protection against liquid contamination while maintaining all the benefits of a standard Lubri-Disc® seal. The enhanced seal helps provide up to five times better protection against water entry due to wash down. The CAMROL standard for seals, the Lubri-Disc seal not only helps keep contaminants out and lubrication in the bearing, but with an integral back plate to separate the metal to metal contact between the outer ring and endplate(s) or flange. The back plate feature reduce friction resulting in lower operating temperatures which can extend grease life and allowing for higher operating speeds Our seal also includes vents to help prevent seal blowout during relubrication, while the outer raceway is machined with an reservoir for additional lubricant capacity. The Lubri-Disc+ seal balances sealing, lubricant capacity, and low drag operation essential to a precision cam follower suited for most industrial applications requiring a corrosion resistant solution.

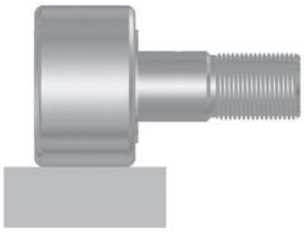

Cylindrical Outside Diameter (OD)

The cylindrical OD can improve performance in certain applications such as improved track capacity by maximizing the contact area with the track.

Features and Benefits continued

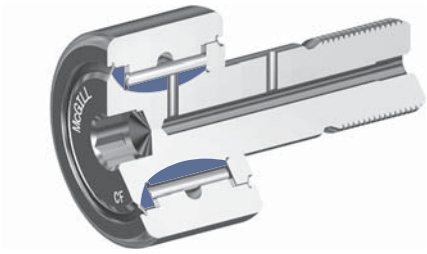

Zone Hardened Raceways

Inner studs are induction heat treated in the roller path and flange surfaces only. The remainder of the stud has a mild hardness (generally below 46HRC) resulting in a ductile stem that provides toughness.

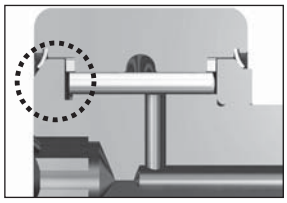

Integral Flange

The integral flange helps maintain bearing integrity throughout the bearing life. Zone hardened to provide wear resistance from incidental contact with the outer or rollers, and provides a sealing surface for the LUBRI-DISC® or LUBRI-DISC+® seal.

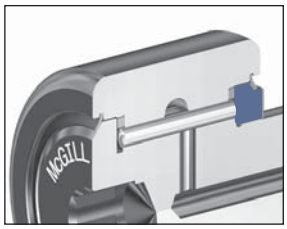

Hardened Endplate

Similar to the flange, the endplate must provide a seal surface for the seal and resist wear from incidental contact with the outer or rollers. The hardened and ground endplate provides a sealing surface for the LUBRI-DISC® or LUBRI-DISC+® seal.

Factory Grease Fill

The cam follower and cam yoke roller bearings are factory lubricated with H1 food grade grease. Contact Application Engineering when application conditions require special lubricants.

Features and Benefits continued

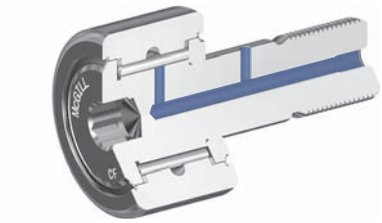

Lubrication Holes

Depending on size, McGill CAMROL bearings may include lubrication holes to accept a standard drive fitting or included oil hole plug(s). The oil hole plug is recommended for closing unused hole to help protect against bearing contamination or lubrication loss.

Permanent Marking

Part number permanently marked on bearing face, helps bearing identification after years of service.

Hole Plug (s)

All McGill Cam followers include 1-2 (depending on # of holes) lubrication hole plugs to help provide proper lubrication path to the rolling elements and prevent contamination from entering the bearing through an unused hole.

Options

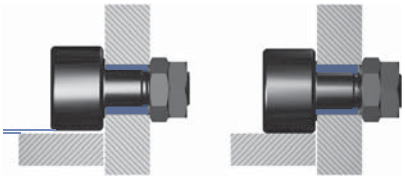

Eccentric Stud

Eccentric stud option provides a means of adjusting the radial position of the bearing which can improve the load sharing of inline bearing combinations. Cam follower load sharing helps reduce operation costs by reducing premature failures due to overloaded bearings, the need of precise mounting hole location tolerances and providing ability to realign bearing due to track wear.

Custom Capabilities

- *Customer Specified factory grease fill*
- *Grease Fitting Installed*
- *Stud or thread length modifications*
- *Roller diameter variations or tolerances*
- *Cam followers grouped or matched diameter tolerance / run out sets*
- *Custom engineered to order designs*

McGILL® CRES CAMROL Bearings

Basic Construction Type: Stud Type 400 Series Stainless Steel

Rolling Elements: Full Complement Needle 400 Series Corrosion Resistant Steel

Seal Type: LUBRI-DISC (7/8" & smaller)
LUBRI-DISC+ (1" & larger)

Lubrication: H1 Food Grade Grease

System Configuration: Concentric / Eccentric Stud

Mounting Feature: Hex Hole

Dimensional Interchange: Standard Camrol

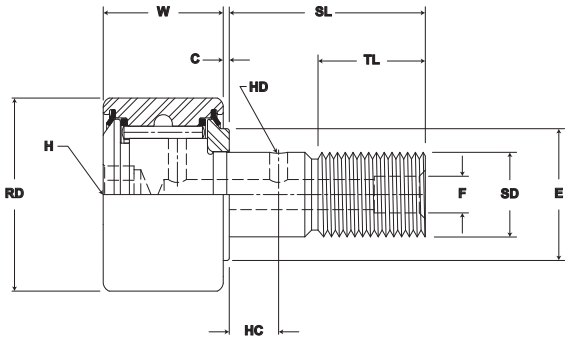

CF-CR Series

Part No.	RD		W		SD		SL	C	TL	L	ECC	G	BD	Track Roller Dynamic Rating	Track Roller Static Rating
With Lubri-Disc Seals	Roller Diameter		Roller Width		Stud Diameter		Stud Length	Endplate Extension	Minimum Thread Length	Length Overall	Eccentric				
	inch mm		inch mm		inch mm		inch mm		inch mm		inch mm			lb/N	lb/N
	Nom.	Tol.	Nom.	Tol.	Nom.	Tol.	(Ref)	(Ref)	(Ref)	(Ref)	(Ref)	+0/-.001	±.001		
CF 1/2 SB CR	.500 12.70	+0/-.001 +0/-.03	.375 9.53	+0/-.001 +0/-.03	.190 4.826	+0/-.001 +0/-.03	.625 15.88	.03 .8	.25 6.35	1.03 26.2	N/A	N/A	N/A	610 2,730	300 1,340
CFE 1/2 SB CR											.010 .25	.375 9.5	.25 6.4		
CF 9/16 SB CR	.5625 14.29	+0/-.001 +0/-.03	.375 9.53	+0/-.001 +0/-.03	.190 4.826	+0/-.001 +0/-.03	.625 15.88	.03 .8	.25 6.35	1.03 26.2	N/A	N/A	N/A	610 2,730	300 1,340
CFE 9/16 SB CR											.010 .25	.375 9.5	.25 6.4		
CF 5/8 SB CR	.625 15.88	+0/-.001 +0/-.03	.438 11.13	+0/-.001 +0/-.03	.250 6.35	+0/-.001 +0/-.03	.750 19.05	.03 .8	.3125 7.94	1.22 30.9	N/A	N/A	N/A	860 3,850	600 2,680
CFE 5/8 SB CR											.015 .38	.437 11.1	.375 9.5		
CF 11/16 SB CR	.6875 17.46	+0/-.001 +0/-.03	.438 11.13	+0/-.001 +0/-.03	.250 6.35	+0/-.001 +0/-.03	.750 19.05	.03 .8	.3125 7.94	1.22 30.9	N/A	N/A	N/A	860 3,850	600 2,680
CFE 11/16 SB CR											.015 .38	.437 11.1	.375 9.5		
CF 3/4 SB CR	.750 19.05	+0/-.001 +0/-.03	.500 12.70	+0/-.001 +0/-.03	.375 9.53	+0/-.001 +0/-.03	.875 22.2	.03 .8	.375 9.5	1.41 35.7	N/A	N/A	N/A	1,500 6,672	1,580 7,028
CFE 3/4 SB CR											.015 .38	.500 12.7	.500 12.7		
CF 7/8 SB CR	.875 22.23	+0/-.001 +0/-.03	.500 12.70	+0/-.001 +0/-.03	.375 9.53	+0/-.001 +0/-.03	.875 22.2	.03 .8	.375 9.5	1.41 35.7	N/A	N/A	N/A	1,500 6,672	1,580 7,028
CFE 7/8 SB CR											.015 .38	.500 12.7	.500 12.7		
CF 1 SB CR	1.000 25.40	+0/-.001 +0/-.03	.625 15.88	+0/-.001 +0/-.03	.4375 11.11	+0/-.001 +0/-.03	1.00 25.4	.03 .8	.50 12.7	1.66 42.1	N/A	N/A	N/A	1,800 8,006	2,040 9,074
CFE 1 SB CR											.030 .76	.500 12.7	.625 15.8		
CF 1 1/8 SB CR	1.125 28.58	+0/-.001 +0/-.03	.625 15.88	+0/-.001 +0/-.03	.4375 11.11	+0/-.001 +0/-.03	1.00 25.4	.03 .8	.50 12.7	1.66 42.1	N/A	N/A	N/A	1,800 8,006	2,040 9,074
CFE 1 1/8 SB CR											.030 .76	.500 12.7	.625 15.8		

Note:
1. Clamping torque is based on lubricated threads. If threads are dry, double the value listed.
2. Since load, lubrication method, temperature and other factors affect the maximum operating speed, it is impossible to determine precise limiting speeds. The listed limiting speeds are based on lightly loaded bearings having adequate lubrication and are listed only as a design guide. More frequent relubrication is required when operating at higher speeds. Actual bearing testing in the specific application should be conducted if the operating speed approaches the listed limiting speed.
3. Use track roller dynamic load rating for life calculations. Maximum dynamic load should not exceed 50% of track roller dynamic load rating. If radial load and/or root mean load exceed 50% of track roller dynamic load rating, life calculations must be reviewed by Application Engineering. If dynamic loads exceed 25% of basic dynamic rating, consideration should be given to use of CYR CRES series CAMROL bearing. For more information please contact Application Engineering (800) 626-2093.
4. The track roller static load rating is based on stud strength. Exceeding the static load rating may impair subsequent dynamic operation.

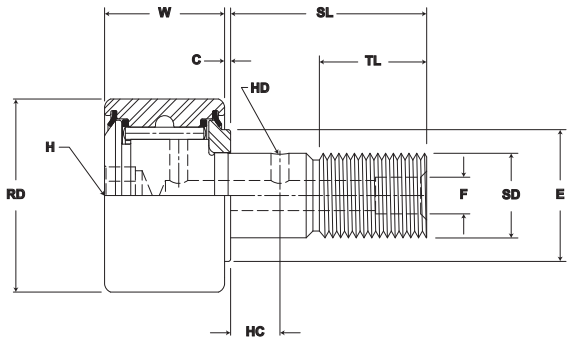

CF-CR Series

Part No. With Lubri-Disc Seals	HC Hole Center inch mm (Ref)	HD Radial Hole Diameter inch mm (Ref)	F Lub. Hole Dia / Fitting inch mm (Ref)	H Hex Hole Suffix XX-B inch mm (Ref)	E Min Boss Diameter inch mm (Ref)	Ro Outer Corner Radius inch mm (Ref)	Housing Bore Diameter inch mm Nom.	Housing Bore Diameter inch mm Tol.	Thread Type	Clamping Torque in-lb Nm	Limiting Speed RPM	WT Bearing Weight lb/kg
CF 1/2 SB CR	-	-	-	.125 3.175	.29 7.5	.015 .38	.1903 4.833	+.0002/-.0003 +.0005/-.0008	10-32	8 .9	11,500	.04 .02
CFE 1/2 SB CR							.253 6.43	+0.001/-0.001 +0.025/-0.025				
CF 9/16 SB CR	-	-	-	.125 3.175	.29 7.5	.015 .38	.1903 4.833	+.0002/-.0003 +.0005/-.0008	10-32	8 .9	10,000	.04 .02
CFE 9/16 SB CR							.253 6.43	+0.001/-0.001 +0.025/-0.025				
CF 5/8 SB CR	-	-	-	.125 3.175	.36 9.1	.015 .38	.2503 6.358	+.0002/-.0003 +.0005/-.0008	1/4-28	18 2	9,200	.05 .02
CFE 5/8 SB CR							.378 9.601	+0.001/-0.001 +0.025/-0.025				
CF 11/16 SB CR	-	-	-	.125 3.175	.36 9.1	.015 .38	.2503 6.358	+.0002/-.0003 +.0005/-.0008	1/4-28	18 2	8,300	.06 .03
CFE 11/16 SB CR							.378 9.601	+0.001/-0.001 +0.025/-0.025				
CF 3/4 SB CR	.25 6.4	.09 2.4	.19 4.8	.1875 5	.500 12.70	.02 .4	.3753 9.533	+.0002/-.0003 +.0005/-.0008	3/8-24	48 5	6,400	.07 .03
CFE 3/4 SB CR							.503 12.77	+0.001/-0.001 +0.025/-0.025				
CF 7/8 SB CR	.25 6.4	.09 2.4	.19 4.8	.1875 5	.500 12.70	.02 .4	.3753 9.533	+.0002/-.0003 +.0005/-.0008	3/8-24	48 5	5,400	.09 .04
CFE 7/8 SB CR							.503 12.77	+0.001/-0.001 +0.025/-0.025				
CF 1 SB CR	.25 6.4	.09 2.4	.19 4.8	.250 6.4	.64 16.3	.03 .8	.4378 11.120	+.0002/-.0003 +.0005/-.0008	7/16-20	125 14	4,800	.17 .08
CFE 1 SB CR							.628 15.95	+0.001/-0.001 +0.025/-0.025				
CF 1 1/8 SB CR	.25 6.4	.09 2.4	.19 4.8	.250 6.4	.64 16.3	.03 .8	.4378 11.120	+.0002/-.0003 +.0005/-.0008	7/16-20	125 14	3,400	.19 .09
CFE 1 1/8 SB CR							.628 15.95	+0.001/-0.001 +0.025/-0.025				

Metric dimensions for reference only.
Not all parts are available from stock. Please contact customer service for availability (800) 626-2120.
For more information on bearing capabilities outside of our standard offering, please contact Application Engineering (800) 626-2093.

McGILL® CRES CAMROL Bearings

Basic Construction Type: Stud Type 400 Series Stainless Steel

Rolling Elements: Full Complement Needle 400 Series Corrosion Resistant Steel

Seal Type: LUBRI-DISC (7/8" & smaller)
LUBRI-DISC+ (1" & larger)

Lubrication: H1 Food Grade Grease

System Configuration: Concentric / Eccentric Stud

Mounting Feature: Hex Hole

Dimensional Interchange: Standard Camrol

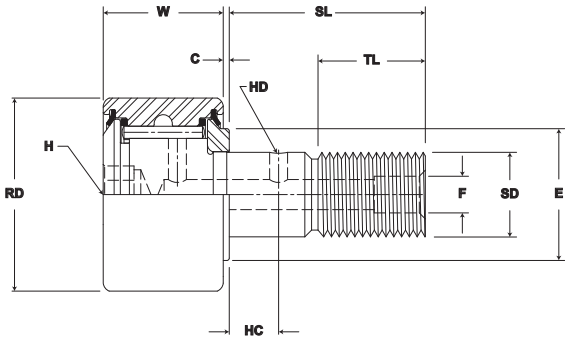

CF-CR Series (continued)

Part No.	RD		W		SD		SL	C	TL	L	ECC	G	BD	Track Roller Dynamic Rating	Track Roller Static Rating
With Lubri-Disc Seals	Roller Diameter		Roller Width		Stud Diameter		Stud Length	Endplate Extension	Minimum Thread Length	Length Overall	Eccentric				
	inch mm		inch mm		inch mm		inch mm		inch mm		inch mm			lb/N	lb/N
	Nom.	Tol.	Nom.	Tol.	Nom.	Tol.	(Ref)	(Ref)	(Ref)	(Ref)	(Ref)	+0/-.001	±.001		
CF 1 1/4 SB CR	1.250 31.75	+0/-.001 +0/-.03	.750 19.05	+0/-.001 +0/-.03	.500 12.70	+0/-.001 +0/-.03	1.25 31.8	.03 .8	.625 15.9	2.03 51.6	N/A	N/A	N/A	2,300 10,230	3,650 16,235
CFE 1 1/4 SB CR											.030 .76	.625 15.8	.687 17.4		
CF 1 3/8 SB CR	1.375 34.93	+0/-.001 +0/-.03	.750 19.05	+0/-.001 +0/-.03	.500 12.70	+0/-.001 +0/-.03	1.25 31.8	.03 .8	.625 15.9	2.03 51.6	N/A	N/A	N/A	2,300 10,230	3,650 16,235
CFE 1 3/8 SB CR											.030 .76	.625 15.8	.687 17.4		
CF 1 1/2 SB CR	1.500 38.10	+0/-.001 +0/-.03	.875 22.23	+0/-.001 +0/-.03	.625 15.88	+0/-.001 +0/-.03	1.50 38.1	.03 .8	.75 19.1	2.41 61.1	N/A	N/A	N/A	4,000 17,792	4,400 19,571
CFE 1 1/2 SB CR											.030 .76	.75 19.1	.875 22.2		
CF 1 5/8 SB CR	1.625 41.28	+0/-.001 +0/-.03	.875 22.23	+0/-.001 +0/-.03	.625 15.88	+0/-.001 +0/-.03	1.50 38.1	.03 .8	.75 19.1	2.41 61.1	N/A	N/A	N/A	4,000 17,792	4,400 19,571
CFE 1 5/8 SB CR											.030 .76	.75 19.1	.875 22.2		
CF 1 3/4 SB CR	1.750 44.45	+0/-.001 +0/-.03	1.000 25.40	+0/-.001 +0/-.03	.750 19.05	+0/-.001 +0/-.03	1.75 44.5	.03 .8	.875 22.2	2.78 70.6	N/A	N/A	N/A	6,000 26,688	5,550 24,686
CFE 1 3/4 SB CR											.030 .76	.875 22.2	1 25.4		
CF 1 7/8 SB CR	1.875 47.63	+0/-.001 +0/-.03	1.000 25.40	+0/-.001 +0/-.03	.750 19.05	+0/-.001 +0/-.03	1.75 44.5	.03 .8	.875 22.2	2.78 70.6	N/A	N/A	N/A	6,000 26,688	5,550 24,686
CFE 1 7/8 SB CR											.030 .76	.875 22.2	1 25.4		
CF 2 SB CR	2.000 50.80	+0/-.001 +0/-.03	1.250 31.75	+0/-.001 +0/-.03	.875 22.23	+0/-.001 +0/-.03	2.00 50.8	.03 .8	2.00 50.8	3.28 83.3	N/A	N/A	N/A	8,200 36,474	6,750 30,024
CFE 2 SB CR											.030 .76	1 25.4	1.187 30.1		
CF 2 1/4 SB CR	2.250 57.15	+0/-.001 +0/-.03	1.250 31.75	+0/-.001 +0/-.03	.875 22.23	+0/-.001 +0/-.03	2.00 50.8	.03 .8	2.00 50.8	3.28 83.3	N/A	N/A	N/A	8,200 36,474	6,750 30,024
CFE 2 1/4 SB CR											.030 .76	1 25.4	1.187 30.1		

Note:
1. Clamping torque is based on lubricated threads. If threads are dry, double the value listed.
2. Since load, lubrication method, temperature and other factors affect the maximum operating speed, it is impossible to determine precise limiting speeds. The listed limiting speeds are based on lightly loaded bearings having adequate lubrication and are listed only as a design guide. More frequent relubrication is required when operating at higher speeds. Actual bearing testing in the specific application should be conducted if the operating speed approaches the listed limiting speed.
3. Use track roller dynamic load rating for life calculations. Maximum dynamic load should not exceed 50% of track roller dynamic load rating. If radial load and/or root mean load exceed 50% of track roller dynamic load rating, life calculations must be reviewed by Application Engineering. If dynamic loads exceed 25% of basic dynamic rating, consideration should be given to use of CYR CRES series CAMROL bearing. For more information please contact Application Engineering (800) 626-2093.
4. The track roller static load rating is based on stud strength. Exceeding the static load rating may impair subsequent dynamic operation.

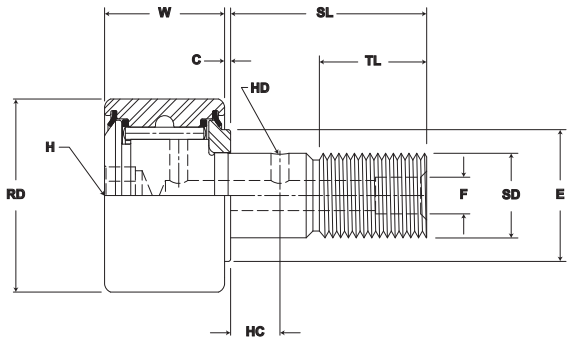

CF-CR Series (continued)

Part No. With Lubri-Disc Seals	HC Hole Center inch mm (Ref)	HD Radial Hole Diameter inch mm (Ref)	F Lub. Hole Dia / Fitting inch mm (Ref)	H Hex Hole Suffix XX-B inch mm (Ref)	E Min Boss Diameter inch mm (Ref)	Ro Outer Corner Radius inch mm (Ref)	Housing Bore Diameter inch mm Nom.	Housing Bore Diameter inch mm Tol.	Thread Type	Clamping Torque in-lb Nm	Limiting Speed RPM	WT Bearing Weight lb/kg
CF 1 1/4 SB CR	.31 7.9	.09 2.4	.19 4.8	.250 6.4	.76 19.4	.03 .8	.5003 12.708	+.0002/-.0003 +.0005/-.0008	1/2-20	175 20	3,100	.30 .14
CFE 1 1/4 SB CR							.690 17.53	+0.001/-0.001 +0.025/-0.025				
CF 1 3/8 SB CR	.31 7.9	.09 2.4	.19 4.8	.250 6.4	.76 19.4	.05 1.2	.5003 12.708	+.0002/-.0003 +.0005/-.0008	1/2-20	175 20	2,800	.35 .16
CFE 1 3/8 SB CR							.690 17.53	+0.001/-0.001 +0.025/-0.025				
CF 1 1/2 SB CR	.38 9.5	.09 2.4	.19 4.8	.3125 7.9	.89 22.6	.06 1.6	.6253 15.883	+.0002/-.0003 +.0005/-.0008	5/8-18	325 37	2,500	.52 .24
CFE 1 1/2 SB CR							.878 22.30	+0.001/-0.001 +0.025/-0.025				
CF 1 5/8 SB CR	.38 9.5	.09 2.4	.19 4.8	.3125 7.9	.89 22.6	.06 1.6	.6253 15.883	+.0002/-.0003 +.0005/-.0008	5/8-18	325 37	2,350	.60 .27
CFE 1 5/8 SB CR							.878 22.30	+0.001/-0.001 +0.025/-0.025				
CF 1 3/4 SB CR	.44 11.1	.09 2.4	.19 4.8	.3125 7.9	1.05 26.6	.06 1.6	.7503 19.058	+.0002/-.0003 +.0005/-.0008	3/4-16	625 71	2,200	.84 .38
CFE 1 3/4 SB CR							1.003 25.48	+0.001/-0.001 +0.025/-0.025				
CF 1 7/8 SB CR	.44 11.1	.09 2.4	.19 4.8	.3125 7.9	1.05 26.6	.06 1.6	.7503 19.058	+.0002/-.0003 +.0005/-.0008	3/4-16	625 71	2,000	.95 .43
CFE 1 7/8 SB CR							1.003 25.48	+0.001/-0.001 +0.025/-0.025				
CF 2 SB CR	.50 12.7	.13 3.2	.19 4.8	.4375 11.1	1.20 30.6	.09 2.4	.8753 22.233	+.0002/-.0003 +.0005/-.0008	7/8-14	750 85	1,400	1.36 .62
CFE 2 SB CR							1.190 30.23	+0.001/-0.001 +0.025/-0.025				
CF 2 1/4 SB CR	.50 12.7	.13 3.2	.19 4.8	.4375 11.1	1.20 30.6	.09 2.4	.8753 22.233	+.0002/-.0003 +.0005/-.0008	7/8-14	750 85	1,300	1.65 .75
CFE 2 1/4 SB CR							1.190 30.23	+0.001/-0.001 +0.025/-0.025				

Metric dimensions for reference only.
Not all parts are available from stock. Please contact customer service for availability (800) 626-2120.
For more information on bearing capabilities outside of our standard offering, please contact Application Engineering (800) 626-2093.

McGILL® CRES CAMROL Bearings

Basic Construction Type: Yoke Type 400 Series Stainless Steel

Rolling Elements: Full Complement Needle 400 Series Corrosion Resistant Steel

Seal Type: LUBRI-DISC (7/8" & smaller)
LUBRI-DISC+ (1" & larger)

Lubrication: H1 Food Grade Grease

Dimensional Interchange: Standard CAMROL

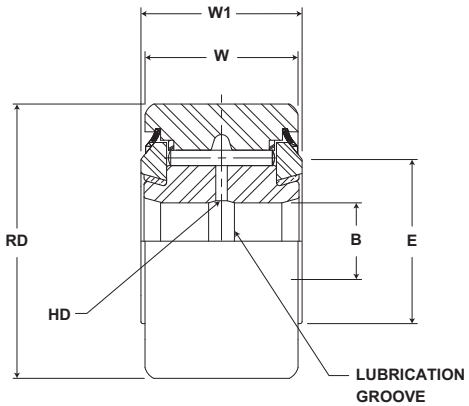

CYR-CR Series

Part No.	RD		W		B		w1		Track Roller Dynamic Rating	Track Roller Static Rating
With Lubri-Disc Seals	Roller Diameter		Roller Width		Bore Diameter		Overall Width			
	inch mm		inch mm		inch mm		inch mm		lb/N	lb/N
	Nom.	Tol.	Nom.	Tol.	Nom.	Tol.	Nom.	Tol.		
CYR 3/4 S CR	.750 19.05	+0/-.005 +0/-.13	.500 12.70	+0/-.005 +0/-.13	.2500 6.35	+.0002/-.0004 +.0002/-.0004	.5625 14.28	+.005/-.001 +.127/-.254	1,490 6,675	2,100 9,400
CYR 7/8 S CR	.875 22.23	+0/-.005 +0/-.15	.500 12.70	+0/-.005 +0/-.15	.2500 6.35	+.0002/-.0004 +.0002/-.0004	.5625 14.28	+.005/-.001 +.127/-.254	1,490 6,675	2,100 9,400
CYR 1 S CR	1.000 25.40	+0/-.005 +0/-.17	.625 15.88	+0/-.005 +0/-.17	.3125 7.94	+.0002/-.0004 +.0002/-.0004	.6875 17.46	+.005/-.001 +.127/-.254	2,000 8,960	5,400 24,190
CYR 1 1/8 S CR	1.125 28.58	+0/-.005 +0/-.19	.625 15.88	+0/-.005 +0/-.19	.3125 7.94	+.0002/-.0004 +.0002/-.0004	.6875 17.46	+.005/-.001 +.127/-.254	2,000 8,960	5,400 24,190
CYR 1 1/4 S CR	1.250 31.75	+0/-.005 +0/-.21	.750 19.05	+0/-.005 +0/-.21	.3750 9.53	+.0002/-.0004 +.0002/-.0004	.8125 20.64	+.005/-.001 +.127/-.254	3,530 15,800	7,700 34,500
CYR 1 3/8 S CR	1.375 34.93	+0/-.005 +0/-.23	.750 19.05	+0/-.005 +0/-.23	.3750 9.53	+.0002/-.0004 +.0002/-.0004	.8125 20.64	+.005/-.001 +.127/-.254	3,530 15,800	7,700 34,500
CYR 1 1/2 S CR	1.500 38.10	+0/-.005 +0/-.25	.875 22.23	+0/-.005 +0/-.25	.4375 11.11	+.0002/-.0004 +.0002/-.0004	.9375 23.81	+.005/-.001 +.127/-.254	4,390 19,488	11,200 50,170
CYR 1 5/8 S CR	1.625 41.28	+0/-.005 +0/-.27	.875 22.23	+0/-.005 +0/-.27	.4375 11.11	+.0002/-.0004 +.0002/-.0004	.9375 23.81	+.005/-.001 +.127/-.254	4,390 19,488	11,200 50,170
CYR 1 3/4 S CR	1.750 44.45	+0/-.005 +0/-.29	1.000 25.40	+0/-.005 +0/-.29	.5000 12.70	+.0002/-.0004 +.0002/-.0004	1.0625 26.99	+.005/-.001 +.127/-.254	5,540 25,670	14,800 66,300
CYR 1 7/8 S CR	1.875 47.63	+0/-.005 +0/-.31	1.000 25.40	+0/-.005 +0/-.31	.5000 12.70	+.0002/-.0004 +.0002/-.0004	1.0625 26.99	+.005/-.001 +.127/-.254	5,540 25,670	14,800 66,300
CYR 2 S CR	2.000 50.80	+0/-.005 +0/-.33	1.250 31.75	+0/-.005 +0/-.33	.6250 15.88	+.0002/-.0004 +.0002/-.0004	1.3125 33.34	+.005/-.001 +.127/-.254	7,270 32,570	17,600 78,850
CYR 2 1/4 S CR	2.250 57.15	+0/-.005 +0/-.35	1.250 31.75	+0/-.005 +0/-.35	.6250 15.88	+.0002/-.0004 +.0002/-.0004	1.3125 33.34	+.005/-.001 +.127/-.254	7,270 32,570	17,600 78,850

Note:
1. Clamping torque is based on lubricated threads. If threads are dry, double the value listed.
2. Since load, lubrication method, temperature and other factors affect the maximum operating speed, it is impossible to determine precise limiting speeds. The listed limiting speeds are based on lightly loaded bearings having adequate lubrication and are listed only as a design guide. More frequent relubrication is required when operating at higher speeds. Actual bearing testing in the specific application should be conducted if the operating speed approaches the listed limiting speed.

CYR-CR Series

Part No.	HC	E	Ro	Recommended Bore Diameters						Limiting Speed	WT
	Hole Center	Min. Clamping Diameter	Outer Corner Radius	Push Fit		Drive Fit		Press Fit			Bearing Weight
With Lubri-Disc Seals	inch mm			inch mm		inch mm		inch mm		RPM	lb/kg
	(Ref)	(Ref)	(Ref)	Nom.	Tol.	Nom.	Tol.	Nom.	Tol.		
CYR 3/4 S CR	.25 6.4	.61 15.5	.02 .4	.2495 6.337	±.0002 ±.005	.2501 6.353	±.0002 ±.005	.2503 6.358	±.0002 ±.005	6,400	.06 .03
CYR 7/8 S CR	.25 6.4	.61 15.5	.02 .4	.2495 6.337	±.0002 ±.005	.2501 6.353	±.0002 ±.005	.2503 6.358	±.0002 ±.005	5,400	.08 .04
CYR 1 S CR	.25 6.4	.78 19.8	.03 .8	.3120 7.925	±.0002 ±.005	.3126 7.940	±.0002 ±.005	.3128 7.945	±.0002 ±.005	4,800	.15 .07
CYR 1 1/8 S CR	.25 6.4	.78 19.8	.03 .8	.3120 7.925	±.0002 ±.005	.3126 7.940	±.0002 ±.005	.3128 7.945	±.0002 ±.005	3,400	.17 .08
CYR 1 1/4 S CR	.31 7.9	.98 25.0	.03 .8	.3745 9.512	±.0002 ±.005	.3751 9.528	±.0002 ±.005	.3753 9.533	±.0002 ±.005	3,100	.24 .11
CYR 1 3/8 S CR	.31 7.9	.98 25.0	.05 1.2	.3745 9.512	±.0002 ±.005	.3751 9.528	±.0002 ±.005	.3753 9.533	±.0002 ±.005	2,800	.30 .14
CYR 1 1/2 S CR	.38 9.5	1.09 27.8	.06 1.6	.4370 11.100	±.0002 ±.005	.4376 11.115	±.0002 ±.005	.4378 11.120	±.0002 ±.005	2,500	.41 .19
CYR 1 5/8 S CR	.38 9.5	1.09 27.8	.06 1.6	.4370 11.100	±.0002 ±.005	.4376 11.115	±.0002 ±.005	.4378 11.120	±.0002 ±.005	2,350	.50 .23
CYR 1 3/4 S CR	.44 11.1	1.25 31.8	.06 1.6	.4995 12.687	±.0002 ±.005	.5001 12.703	±.0002 ±.005	.5005 12.713	±.0002 ±.005	2,200	.64 .29
CYR 1 7/8 S CR	.44 11.1	1.25 31.8	.06 1.6	.4995 12.687	±.0002 ±.005	.5001 12.703	±.0002 ±.005	.5005 12.713	±.0002 ±.005	2,000	.80 .36
CYR 2 S CR	.50 12.7	1.41 35.7	.09 2.4	.6245 15.862	±.0002 ±.005	.6251 15.878	±.0002 ±.005	.6245 15.862	±.0002 ±.005	1,400	1.05 .48
CYR 2 1/4 S CR	.50 12.7	1.41 35.7	.09 2.4	.6245 15.862	±.0002 ±.005	.6251 15.878	±.0002 ±.005	.6245 15.862	±.0002 ±.005	1,300	1.32 .59

Metric dimensions for reference only.
Not all parts are available from stock. Please contact customer service for availability (800) 626-2120.
For more information on bearing capabilities outside of our standard offering, please contact Application Engineering (800) 626-2093.

Sealmaster RPB-CR Series Mounted Tapered Roller Bearings

Sealmaster RPB-CR self aligning high capacity tapered roller bearings include a fluoropolymer coated housing and lock collars, stainless steel grease fittings, single lip contact seal and GoldPlex-FG (USDA H1) food grade grease for corrosion resistant applications. The fluoropolymer coating is resistant to most chemicals and hydrocarbon solvents. These bearings are used in applications where they may be subjected to moisture, corrosive and abrasive environments. Depending on your preference, these bearings are available in two or four bolt pillow blocks and four bolt flanges as illustrated on the pages to follow.

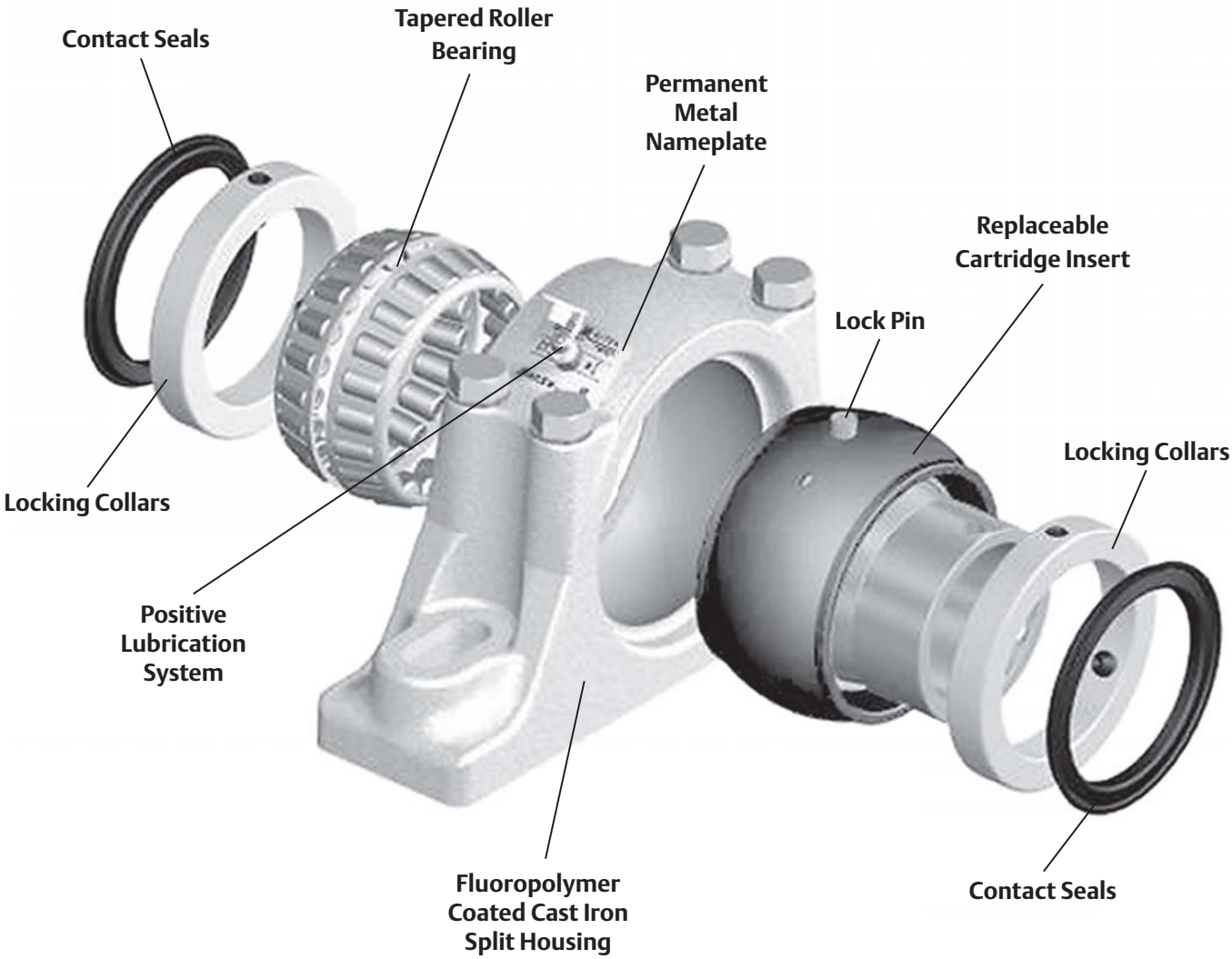

RPB-CR Bearing Nomenclature

Housing Type
- RPB - Roller Pillow Block
- RFB - Roller Flange Block

Optional Suffix
- A - Single Lock Collar
- No Suffix - Two Lock Collars

Bore Size
- Inch -
  - First Digit - Number Of Inches
  - Second & Third Digit - Number of 1/16 of Inches (Ex. 107 = 1 7/16")
- Metric - 65 mm = 65 mm

Seal
- C - Contact Seal

Bolts (For Pillow Blocks Only)
- 2 - Two Bolt Base
- 4 - Four Bolt Base

Options
- CR - Corrosion Resistant

RPBA 107 - C2 CR

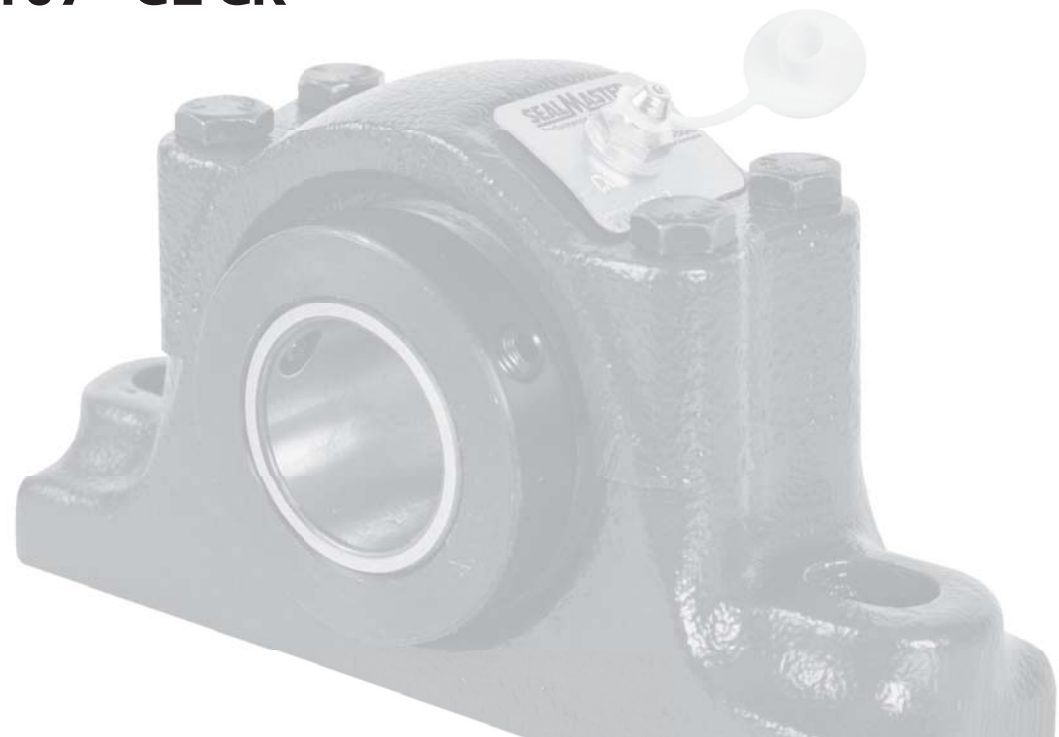

Features and Benefits

Tapered Roller Bearings

Sealmaster® RPB-CR series contains heavy duty tapered roller bearings for radial, thrust and combination loading

Fluoropolymer Coated Cast Iron Split Housings

This non-stick coating on the housing and cap bolts, offers resistance to chemicals and performs better than painted or nickel coated housings in our testing. Stainless steel cap bolt washers and grease fittings also provide resistance to corrosion. Permanent metal nameplate allows for easy identification (For more information on fluoropolymer coating see page K-76).

Replaceable Cartridge Insert (RCI)

The heart of the RPB-CR is the unitized, self-aligning cartridge insert with integral seals and double locking collars. The replaceable cartridge insert can accommodate +/- 3° static misalignment capability has factory controlled clearances and is factory sealed and lubricated. The cartridges fit all housing styles and are field replaceable for quick change out. RCI outer races are black oxide treated.

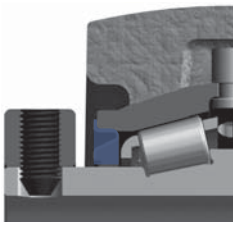

Contact Seals

Single lip race mounted contact seal is composed of a steel inner seal with a bonded elastomeric sealing member. The steel inner seal is press fitted into the inside diameter of the outer race, while the bonded elastomeric sealing member is held in the proper rubbing contact position on the outer diameter of the inner race. Black oxided seal stampings inhibits corrosion.

Features and Benefits continued

Positive Lubrication System

Positive lubrication system provides direct grease path to the bearing. The unit is designed with two lubrication ports in the cartridge OD so that one of the lube holes in the cartridge lines up with grease fitting regardless of insert orientation in the housing. A rubber grommet in housing top recess directs lubricant into bearing cavity. Extra lubrication ports help prevent seal damage by venting excess pressure from over greasing. Sealmaster alignment pin helps prevent outer race rotation.

Collar Mount System

Two fluoropolymer coated locking collars are standard on all units with two setscrews at 120° for balanced three point contact. Precision manufactured diamond faceted setscrew design contributes to improved clamping and resistance to back out. Single locking collars are available where space limitations are present.

Specialized Food Grade Lubrication

The Sealmaster RPB-CR bearings are factory filled with Sealmaster GoldPlex-FG (Food Grade) grease (USDA H1 approved) which is suitable for mounted bearing lubrication where incidental contact with food products may occur in any application where clean, routine lubrication is required. For more information on Sealmaster GoldPlex-FG see page L-6.

SEALMASTER® RPB-CR Series Mounted Tapered Roller Bearings

Rolling Elements: Tapered Roller

Housing: Fluoropolymer Coated Cast Iron Two Bolt Pillow Block

Self Alignment: +/- 3 Degrees

Lock: Setscrew, Double Lock Collar

Seal: Single Lip Contact

Temperature: -20° to 220° F

Grease: Sealmaster GoldPlex-FG

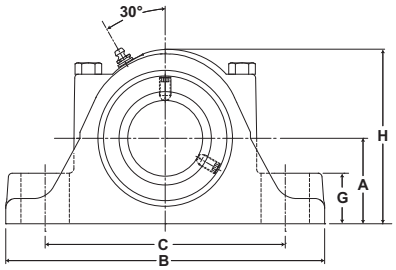

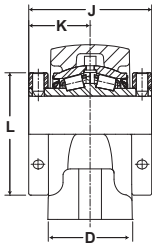

RPB-CR Series Two-Bolt Base Pillow Blocks

Bore Diameter inch	Bore Diameter mm	Standard Seal Part No.	Basic Dynamic Rating lb/N	Approx. Wt. lb/kg	Dimensions inch/mm A	B	C Min.	C Max.	D	G	H	J	K	L	Bolt Size
1 3/16		RPB 103-C2 CR	2975	4.8	1 1/2	6 1/4	4 9/16	4 15/16	1 7/8	7/8	3 1/8	2 3/4	1 3/8	2 1/4	1/2
1 1/4		RPB 104-C2 CR	13233	2.2	38.1	158.8	115.9	125.4	47.6	22.2	79.4	69.9	34.9	57.2	
1 3/8		RPB 106-C2 CR	4760	7.7	1 7/8	7 1/4	5 5/16	5 15/16	2 1/16	1 1/8	3 13/16	3	1 1/2	2 5/8	1/2
1 7/16		RPB 107-C2 CR	21172	3.5	47.6	184.2	134.9	150.8	52.4	28.6	96.8	76.2	76.2	66.7	
	35	RPB 35MM-C2 CR													
1 1/2		RPB 108-C2 CR	6140	10.9	2 1/8	7 3/4	5 9/16	6 7/16	2 5/16	1 1/4	4 3/8	3 3/8	1 11/16	2 7/8	1/2
1 5/8		RPB 110-C2 CR	27311	4.9	54.0	196.9	141.3	163.5	58.7	31.8	111.1	85.7	42.9	73.0	
	40	RPB 40MM-C2 CR													
1 11/16		RPB 111-C2 CR	6140 27311	10.9 4.9	2 1/8 54.0	7 3/4 196.9	5 9/16 141.3	6 7/16 163.5	2 5/16 58.7	1 1/4 31.8	4 3/8 31.8	3 3/8 31.8	1 11/16 31.8	2 7/8 73.0	1/2
1 3/4		RPB 112-C2 CR	8070	13.2	2 1/4	8 7/8	6 5/16	7 3/16	2 7/16	1 1/4	4 5/8	3 1/2	1 3/4	3 1/4	5/8
1 15/16		RPB 115-C2 CR	35895	6.0	57.2	225.4	160.3	182.6	61.9	31.8	117.5	88.9	44.5	82.6	
2		RPB 200-C2 CR													
	45	RPB 45MM-C2 CR													
	50	RPB 50MM-C2 CR													
2 3/16		RPB 203-C2 CR	8570	15.7	2 1/2	9 5/8	6 11/16	7 15/16	2 9/16	1 7/16	5 1/8	3 3/4	1 7/8	3 5/8	5/8
	55	RPB 55MM-C2 CR	38119	7.1	63.5	244.5	169.9	201.6	65.1	36.5	130.2	95.3	47.6	92.1	
2 1/4		RPB 204-C2 CR	9030	20.7	2 3/4	10 3/8	6 15/16	8 11/16	2 3/4	1 5/8	5 5/8	4	2	3 15/16	5/8
2 7/16		RPB 207-C2 CR	40165	9.4	69.9	263.5	176.2	220.7	69.9	41.3	142.9	101.6	50.8	100.0	
	60	RPB 60MM-C2 CR													
	65	RPB 65MM-C2 CR													
2 11/16		RPB 211-C2 CR	9630	29.3	3 1/8	11 3/4	8 1/16	9 11/16	3	1 3/4	6 3/8	4 1/2	2 1/4	4 23/32	3/4
2 3/4		RPB 212-C2 CR	42834	13.3	79.4	298.5	204.8	246.1	76.2	44.5	161.9	114.3	57.2	119.9	
2 15/16		RPB 215-C2 CR													
3		RPB 300-C2 CR													
	70	RPB 70MM-C2 CR													
	75	RPB 75MM-C2 CR													
3 3/16		RPB 303-C2 CR	15320	56.0	3 3/4	13 3/4	10 1/8	11 1/4	4 1/8	2	7 3/4	5	2 1/2	5 7/16	7/8
3 1/4		RPB 304-C2 CR	68143	25.4	95.3	349.3	257.2	285.8	104.8	52.4	196.9	127.0	63.5	138.1	
3 7/16		RPB 307-C2 CR													
3 1/2		RPB 308-C2 CR													
	80	RPB 80MM-C2 CR													
	85	RPB 85MM-C2 CR													
	90	RPB 90MM-C2 CR													
	95	RPB 95MM-C2 CR													

Metric dimensions for reference only.
Not all parts are available from stock. Please contact customer service for availability (800) 626-2120.
For more information on bearing capabilities outside of our standard offering, please contact Application Engineering (800) 626-2093.

RPB-CR Series Mounted Tapered Roller Bearings

SEALMASTER®

Rolling Elements: Tapered Roller

Housing: Fluoropolymer Coated Cast Iron Two Bolt Pillow Block

Self Alignment: +/- 3 Degrees

Lock: Setscrew, Single Lock Collar

Seal: Single Lip Contact

Temperature: -20° to 220° F

Grease: Sealmaster GoldPlex-FG

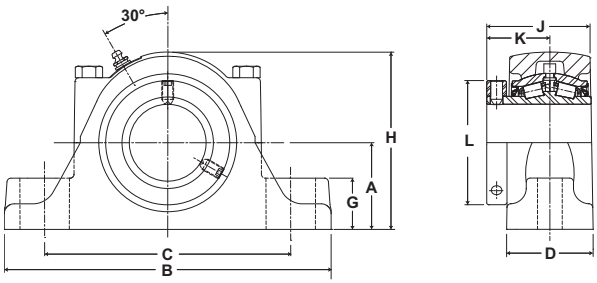

RPBA-CR Series Two-Bolt Base Pillow Blocks - Single Lock Collar

Bore Diameter inch	Bore Diameter mm	Standard Seal Part No.	Basic Dynamic Rating lb/N	Approx. Wt. lb/kg	Dimensions inch/mm A	B	C Min.	C Max.	D	G	H	J	K	L	Bolt Size
1 3/16		RPBA 103-C2 CR	2975	4.8	1 1/2	6 1/4	4 9/16	4 15/16	1 7/8	7/8	3 1/8	2 3/8	1 3/8	2 1/4	1/2
1 1/4		RPBA 104-C2 CR	13233	2.2	38.1	158.8	115.9	125.4	47.6	22.2	79.4	60.3	34.9	57.2	
1 3/8		RPBA 106-C2 CR	4760	7.7	1 7/8	7 1/4	5 5/16	5 15/16	2 1/16	1 1/8	3 13/16	2 17/32	1 1/2	2 5/8	1/2
1 7/16		RPBA 107-C2 CR	21172	3.5	47.6	184.2	134.9	150.8	52.4	28.6	96.8	64.3	38.1	66.7	
1 1/2		RPBA 108-C2 CR	6140	10.9	2 1/8	7 3/4	5 9/16	6 7/16	2 5/16	1 1/4	4 3/8	2 27/32	1 11/16	2 7/8	1/2
1 5/8		RPBA 110-C2 CR	27311	4.9	54.0	196.9	141.3	163.5	58.7	31.8	111.1	72.2	42.9	73.0	
1 11/16		RPBA 111-C2 CR													
1 3/4		RPBA 112-C2 CR	8070	13.2	2 1/4	8 7/8	6 5/16	7 3/16	2 7/16	1 1/4	4 5/8	2 61/64	1 3/4	3 1/4	5/8
1 15/16		RPBA 115-C2 CR	35895	6.0	57.2	225.4	160.3	182.6	61.9	31.8	117.5	75.0	44.5	82.6	
2		RPBA 200-C2 CR													
	45	RPBA 45MM-C2 CR													
	50	RPBA 50MM-C2 CR													
2 3/16		RPBA 203-C2 CR	8570	15.7	2 1/2	9 5/8	6 11/16	7 15/16	2 9/16	1 7/16	5 1/8	3 1/8	1 7/8	3 5/8	5/8
	55	RPBA 55MM-C2 CR	38119	7.1	63.5	244.5	169.9	201.6	65.1	36.5	130.2	79.4	47.6	92.1	
2 1/4		RPBA 204-C2 CR	9030	20.7	2 3/4	10 3/8	6 15/16	8 11/16	2 3/4	1 5/8	5 5/8	3 5/16	2	3 15/16	5/8
2 7/16		RPBA 207-C2 CR	40165	9.4	69.9	263.5	176.2	220.7	69.9	41.3	142.9	84.1	50.8	100.0	
2 1/2		RPBA 208-C2 CR													
	60	RPBA 60MM-C2 CR													
	65	RPBA 65MM-C2 CR													
2 11/16		RPBA 211-C2 CR	9630	29.3	3 1/8	11 3/4	8 1/16	9 11/16	3	1 3/4	6 3/8	3 11/16	2 1/4	4 23/32	3/4
2 3/4		RPBA 212-C2 CR	42834	13.3	79.4	298.5	204.8	246.1	76.2	44.5	161.9	93.7	57.2	119.9	
2 15/16		RPBA 215-C2 CR													
3		RPBA 300-C2 CR													
	70	RPBA 70MM-C2 CR													
	75	RPBA 75MM-C2 CR													
3 3/16		RPBA 303-C2 CR	15320	56	3 3/4	13 3/4	10 1/8	11 1/4	4 1/8	2	7 3/4	4 3/16	2 1/2	5 7/16	7/8
3 1/4		RPBA 304-C2 CR	68143	25.4	95.3	349.3	257.2	285.8	104.8	50.8	196.9	106.4	63.5	138.1	
3 7/16		RPBA 307-C2 CR													
3 1/2		RPBA 308-C2 CR													
	80	RPBA 80MM-C2 CR													
	85	RPBA 85MM-C2 CR													
	90	RPBA 90MM-C2 CR													
	95	RPBA 95MM-C2 CR													

SEALMASTER® RPB-CR Series Mounted Tapered Roller Bearings

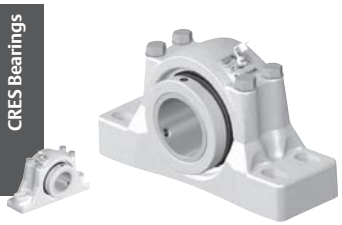

Rolling Elements: Tapered Roller

Housing: Fluoropolymer Coated Cast Iron Four Bolt Pillow Block

Self Alignment: +/- 3 Degrees

Lock: Setscrew, Double Lock Collar

Seal: Single Lip Contact

Temperature: -20° to 220° F

Grease: Sealmaster GoldPlex-FG

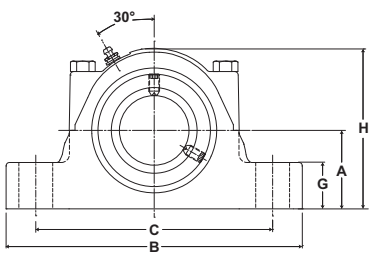

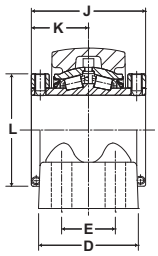

RPB-CR Series Four-Bolt Base Pillow Blocks

Bore Diameter inch	Bore Diameter mm	Standard Seal Part No.	Basic Dynamic Rating lb/N	Approx. Wt. lb/kg	Dimensions inch/mm A	B	C Min.	C Max.	D	E	G	H	J	K	L	Bolt Size
2 1/4		RPB 204-C4 CR	9030	22.4	2 3/4	10 3/8	7 3/4	8 3/4	3 1/2	1 7/8	1 5/8	5 5/8	4	2	3 15/16	5/8
2 7/16		RPB 207-C4 CR	40165	10.2	69.9	263.5	196.9	222.3	88.9	47.6	41.3	142.9	101.6	50.8	100.0	
2 1/2		RPB 208-C4 CR														
	60	RPB 60MM-C4 CR														
	65	RPB 65MM-C4 CR														
2 11/16		RPB 211-C4 CR	9630	31.5	3 1/8	11 3/4	8 3/4	10	3 3/4	2 1/8	1 3/4	6 3/8	4 1/2	2 1/4	4 23/32	5/8
2 3/4		RPB 212-C4 CR	42834	14.3	79.4	298.5	222.3	254.0	95.3	54.0	44.5	161.9	114.3	57.2	119.9	
2 15/16		RPB 215-C4 CR														
3		RPB 300-C4 CR														
	70	RPB 70MM-C4 CR														
	75	RPB 75MM-C4 CR														
3 3/16		RPB 303-C4 CR	15320	59.6	3 3/4	13 3/4	10 9/16	11 1/2	4 1/2	2 3/8	2 1/16	7 3/4	5	2 1/2	5 7/16	5/8
3 1/4		RPB 304-C4 CR	68143	27.0	95.3	349.3	268.3	292.1	114.3	60.3	52.4	196.9	127.0	63.5	138.1	
3 7/16		RPB 307-C4 CR														
3 1/2		RPB 308-C4 CR														
	80	RPB 80MM-C4 CR														
	85	RPB 85MM-C4 CR														
	90	RPB 90MM-C4 CR														
	95	RPB 95MM-C4 CR														
3 15/16		RPB 315-C4 CR	20980	76.9	4 1/4	15 1/4	11	13	4 1/2	2 1/4	2 7/16	8 5/8	6 1/4	3 1/8	5 15/16	3/4
4		RPB 400-C4 CR	93319	34.9	108.0	387.4	279.4	330.2	114.3	57.2	61.9	219.1	158.8	79.4	150.8	
	100	RPB 100MM-C4 CR														
	105	RPB 105MM-C4 CR														
4 7/16		RPB 407-C4 CR	25750	95.6	4 3/4	16 1/2	11 3/4	13 7/8	4 5/8	2 1/2	2 3/4	9 5/8	6 3/4	3 3/8	6 1/2	3/4
4 1/2		RPB 408-C4 CR	114536	43.4	120.7	419.1	298.5	352.4	117.5	63.5	69.9	244.5	171.5	85.7	165.1	
	110	RPB 110MM-C4 CR														
	115	RPB 115MM-C4 CR														
4 15/16		RPB 415-C4 CR	35520	143.6	5 1/2	18 1/2	13 1/2	15 7/8	5 1/8	2 3/4	3 1/8	11	7 1/4	3 5/8	7 5/16	7/8
5		RPB 500-C4 CR	157993	65.1	139.7	469.9	342.9	403.2	130.2	69.9	79.4	279.4	184.2	92.1	185.7	
	120	RPB 120MM-C4 CR														
	125	RPB 125MM-C4 CR														

Metric dimensions for reference only.
Not all parts are available from stock. Please contact customer service for availability (800) 626-2120.
For more information on bearing capabilities outside of our standard offering, please contact Application Engineering (800) 626-2093.

RPB-CR Series Mounted Tapered Roller Bearings

SEALMASTER®

Rolling Elements: Tapered Roller

Housing: Fluoropolymer Coated Cast Iron Four Bolt Pillow Block

Self Alignment: +/- 3 Degrees

Lock: Setscrew, Single Lock Collar

Seal: Single Lip Contact

Temperature: -20° to 220° F

Grease: Sealmaster GoldPlex-FG

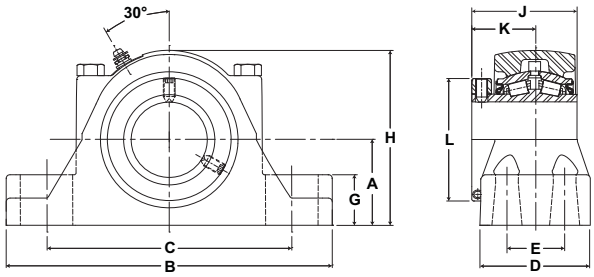

RPBA-CR Series Four-Bolt Base Pillow Blocks - Single Lock Collar

Bore Diameter		Standard Seal Part No.	Basic Dynamic Rating lb/N	Approx. Wt lb/kg	Dimensions inch/mm											Bolt Size
					A	B	C		D	E	G	H	J	K	L	
inch	mm						Min.	Max.								
2 1/4		RPBA 204-C4 CR	9030	22.4	2 3/4	10 3/8	7 3/4	8 3/4	3 1/2	1 7/8	1 5/8	5 5/8	3 5/16	2	3 15/16	5/8
2 7/16		RPBA 207-C4 CR	40165	10.2	69.9	263.5	196.9	222.3	88.9	47.6	41.3	142.9	84.1	50.8	100.0	
2 1/2		RPBA 208-C4 CR														
	60	RPBA 60MM-C4 CR														
	65	RPBA 65MM-C4 CR														
2 11/16		RPBA 211-C4 CR	9630	31.5	3 1/8	11 3/4	8 3/4	10	3 3/4	2 1/8	1 3/4	6 3/8	3 11/16	2 1/2	4 23/32	3/4
2 3/4		RPBA 212-C4 CR	42834	14.3	79.4	298.5	222.3	254.0	95.3	54.0	44.5	161.9	93.7	63.5	119.9	
2 15/16		RPBA 215-C4 CR														
3		RPBA 300-C4 CR														
	70	RPBA 70MM-C4 CR														
	75	RPBA 75MM-C4 CR														
3 3/16		RPBA 303-C4 CR	15320	59.8	3 3/4	13 3/4	10 9/16	11 1/2	4 1/2	2 3/8	2 1/16	7 3/4	4 3/16	2 1/2	5 7/16	7/8
3 1/4		RPBA 304-C4 CR	68143	27.1	95.3	349.3	268.3	292.1	114.3	60.3	52.4	196.9	106.4	63.5	138.1	
3 7/16		RPBA 307-C4 CR														
3 1/2		RPBA 308-C4 CR														
	80	RPBA 80MM-C4 CR														
	85	RPBA 85MM-C4 CR														
	90	RPBA 90MM-C4 CR														
	95	RPBA 95MM-C4 CR														
3 15/16		RPBA 315-C4 CR	20980	76.9	4 1/4	15 1/4	11	13	4 1/2	2 1/4	2 7/16	8 5/8	5 1/4	3 1/8	5 15/16	5/8
4		RPBA 400-C4 CR	93319	34.9	108.0	387.4	279.4	330.2	114.3	57.2	61.9	219.1	133.4	79.4	150.8	
	100	RPBA 100MM-C4 CR														
	105	RPBA 105MM-C4 CR														
4 7/16		RPBA 407-C4 CR	25750	95.6	4 3/4	16 1/2	11 3/4	13 7/8	4 5/8	2 1/2	2 7/8	9 5/8	5 1/2	3 3/8	6 1/2	3/4
4 1/2		RPBA 408-C4 CR	114536	43.4	120.7	419.1	298.5	352.4	117.5	63.5	73.0	244.5	139.7	85.7	165.1	
	110	RPBA 110MM-C4 CR														
	115	RPBA 115MM-C4 CR														
4 15/16		RPBA 415-C4 CR	35520	143.6	5 1/2	18 1/2	13 1/2	15 7/8	5 1/8	2 3/4	3 1/8	11	6 13/64	3 5/8	7 5/16	7/8
5		RPBA 500-C4 CR	157993	65.1	139.7	469.9	342.9	403.2	130.2	69.9	79.4	279.4	157.6	92.1	185.7	
	120	RPBA 120MM-C4 CR														
	125	RPBA 125MM-C4 CR														

Metric dimensions for reference only.
Not all parts are available from stock. Please contact customer service for availability (800) 626-2120.
For more information on bearing capabilities outside of our standard offering, please contact Application Engineering (800) 626-2093.

SEALMASTER® RPB-CR Series Mounted Tapered Roller Bearings

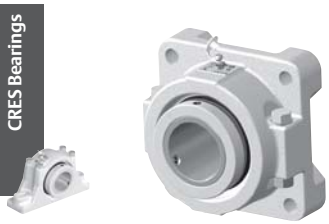

Rolling Elements: Tapered Roller

Housing: Fluoropolymer Coated Cast Iron Four Bolt Flange

Self Alignment: +/- 3 Degrees

Lock: Setscrew, Double Lock Collar

Seal: Single Lip Contact

Temperature: -20° to 220° F

Grease: Sealmaster GoldPlex-FG

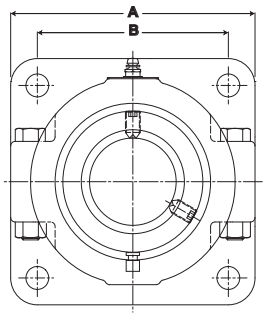

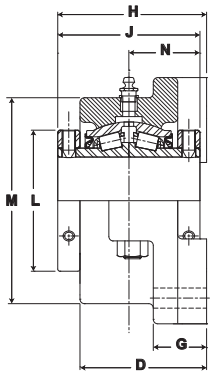

RFB-CR Series Four-Bolt Flange Units

Bore Diameter inch	Bore Diameter mm	Standard Seal Part No.	Basic Dynamic Rating lb/N	Approx. Wt. lb/kg	Dimensions inch/mm A	B	B.C	D	G	H	J	L	M	N	Bolt Size
1 3/16 1 1/4		RFB 103C CR RFB 104C CR	2975 13233	6.0 2.7	4 101.6	2 7/8 73.0	4 1/16 103.2	2 5/16 58.7	1 25.4	2 13/16 71.4	2 25/32 70.6	2 1/4 57.2	3 1/4 82.6	1 25/64 35.3	3/8
1 3/8 1 7/16	35	RFB 106C CR RFB 107C CR RFB 35MM-C CR	4760 21172	8.1 3.7	4 5/8 117.5	3 1/2 88.9	4 61/64 125.8	2 9/16 65.1	1 25.4	3 1/16 77.8	3 76.2	2 5/8 66.7	3 3/4 95.3	1 1/2 38.1	1/2
1 1/2 1 5/8 1 11/16	40	RFB 108C CR RFB 110C CR RFB 111C CR RFB 40MM-C CR	6140 27311	12.3 5.6	5 3/8 136.5	4 1/8 104.8	5 53/64 148.0	2 15/16 74.6	1 3/16 30.2	3 1/2 88.9	3 3/8 85.7	2 7/8 73.0	4 1/2 114.3	1 11/16 42.9	1/2
1 3/4 1 15/16 2	45 50	RFB 112C CR RFB 115C CR RFB 200C CR RFB 45MM-C CR RFB 50MM-C CR	8070 35895	14.5 6.6	5 5/8 142.9	4 3/8 111.1	6 3/16 157.2	3 1/16 77.8	1 3/16 30.2	3 5/8 92.1	3 1/2 88.9	3 1/4 82.6	4 3/4 120.7	1 3/4 44.5	1/2
2 3/16	55	RFB 203C CR RFB 55MM-C CR	8570 38119	19.0 8.6	6 1/4 158.8	4 7/8 123.8	6 57/64 175.0	3 1/4 82.6	1 3/8 34.9	3 7/8 98.4	3 3/4 95.3	3 5/8 92.1	5 1/4 133.4	1 7/8 47.6	5/8
2 1/4 2 7/16 2 1/2	60 65	RFB 204C CR RFB 207C CR RFB 208C CR RFB 60MM-C CR RFB 65MM-C CR	9030 40165	24.0 10.9	6 7/8 174.6	5 3/8 136.5	7 39/64 193.3	3 9/16 90.5	1 1/2 38.1	4 3/16 106.4	4 101.6	3 15/16 100.0	5 3/4 146.1	2 50.8	5/8
2 11/16 2 3/4 2 15/16 3	70 75	RFB 211C CR RFB 212C CR RFB 215C CR RFB 300C CR RFB 70MM-C CR RFB 75MM-C CR	9630 42834	33.4 15.1	7 3/4 196.9	6 152.4	8 31/64 215.5	3 15/16 100.0	1 5/8 41.3	4 11/16 119.1	4 1/2 114.3	4 3/4 120.7	6 1/2 165.1	2 1/4 57.2	3/4
3 3/16 3 1/4 3 7/16 3 1/2	80 85 90 95	RFB 303C CR RFB 304C CR RFB 307C CR RFB 308C CR RFB 80MM-C CR RFB 85MM-C CR RFB 90MM-C CR RFB 95MM-C CR	15320 68143	57.4 26.0	9 1/4 235.0	7 177.8	9 29/32 251.6	4 1/2 114.3	1 7/8 47.6	5 1/4 133.4	5 127.0	5 7/16 138.1	8 203.2	2 1/2 63.5	3/4
3 15/16 4	100 105	RFB 315C CR RFB 400C CR RFB 100MM-C CR RFB 105MM-C CR	20980 93319	81.8 37.1	10 1/4 260.4	7 3/4 196.9	10 61/64 278.2	5 5/8 142.9	2 1/8 54.0	6 1/2 165.1	6 1/4 158.8	6 152.4	8 7/8 225.4	3 1/8 79.4	7/8

Metric dimensions for reference only.
Not all parts are available from stock. Please contact customer service for availability (800) 626-2120.
For more information on bearing capabilities outside of our standard offering, please contact Application Engineering (800) 626-2093.

RPB-CR Series Mounted Tapered Roller Bearings

SEALMASTER®

Rolling Elements: Tapered Roller

Housing: Fluoropolymer Coated Cast Iron Four Bolt Flange Block

Self Alignment: +/- 3 Degrees

Lock: Setscrew, Single Lock Collar

Seal: Single Lip Contact

Temperature: -20° to 220° F

Grease: Sealmaster GoldPlex-FG

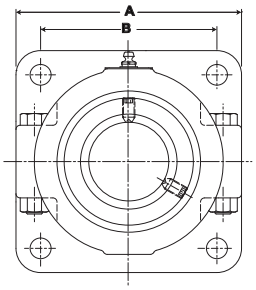

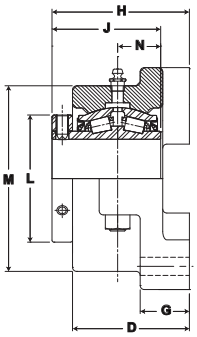

RFBA-CR Series Four-Bolt Flange Units - Single Lock Collar

Bore Diameter inch	Bore Diameter mm	Standard Seal Part No.	Basic Dynamic Rating lb/N	Approx. Wt. lb/kg	Dimensions inch/mm A	B	B.C	D	G	H	J	L	M	N	Bolt Size
1 3/16		RFBA 103C CR	2975	6.0	4	2 7/8	4 1/16	2 5/16	1	2 13/16	2 1/4	2 1/4	3 1/4	55/64	3/8
1 1/4		RFBA 104C CR	13233	2.7	101.6	73.0	103.2	58.7	25.4	71.4	57.2	57.2	82.6	21.8	
1 3/8		RFBA 106C CR	4760	8.1	4 5/8	3 1/2	4 61/64	2 9/16	1	3 1/16	2 17/32	2 5/8	3 3/4	1 1/32	1/2
1 7/16		RFBA 107C CR	21172	3.7	117.5	88.9	125.8	65.1	25.4	77.8	64.3	66.7	95.3	26.2	
1 1/2		RFBA 108C CR	6140	12.3	5 3/8	4 1/8	5 53/64	2 15/16	1 3/16	3 1/2	2 27/32	2 7/8	4 1/2	1 5/32	1/2
1 5/8		RFBA 110C CR	27311	5.6	136.5	104.8	148.0	74.6	30.2	88.9	72.2	73.0	114.3	29.4	
1 11/16		RFBA 111C CR													
1 3/4		RFBA 112C CR	8070	14.5	5 5/8	4 3/8	6 3/16	3 1/16	1 3/16	3 5/8	2 61/64	3 1/4	4 3/4	1 13/64	1/2
1 15/16		RFBA 115C CR	35895	6.6	142.9	111.1	157.2	77.8	30.2	92.1	75.0	82.6	120.7	30.6	
2		RFBA 200C CR													
	45	RFBA 45MM-C CR													
	50	RFBA 50MM-C CR													
2 3/16		RFBA 203C CR	8570	19.0	6 1/4	4 7/8	6 57/64	3 1/4	1 3/8	3 7/8	3 1/8	3 5/8	5 1/4	1 1/4	5/8
	55	RFBA 55MM-C CR	38119	8.6	158.8	123.8	175.0	82.6	34.9	98.4	79.4	92.1	133.4	31.8	
2 1/4		RFBA 204C CR	9030	24.0	6 7/8	5 3/8	7 39/64	3 9/16	1 1/2	4 3/16	3 5/16	3 15/16	5 3/4	1 5/16	5/8
2 7/16		RFBA 207C CR	40165	10.9	174.6	136.5	193.3	90.5	38.1	106.4	84.1	100.0	146.1	33.3	
2 1/2		RFBA 208C CR													
	60	RFBA 60MM-C CR													
	65	RFBA 65MM-C CR													
2 11/16		RFBA 211C CR	9630	33.4	7 3/4	6	8 31/64	3 15/16	1 5/8	4 11/16	3 11/16	4 3/4	6 1/2	1 7/16	3/4
2 3/4		RFBA 212C CR	42834	15.1	196.9	152.4	215.5	100.0	41.3	119.1	93.7	120.7	165.1	36.5	
2 15/16		RFBA 215C CR													
3		RFBA 300C CR													
	70	RFBA 70MM-C CR													
	75	RFBA 75MM-C CR													
3 3/16		RFBA 303C CR	15320	57.4	9 1/4	7	9 29/32	4 1/2	1 7/8	5 1/4	4 3/16	5 7/16	8	1 11/16	3/4
3 1/4		RFBA 304C CR	68143	26.0	235.0	177.8	251.6	114.3	47.6	133.4	106.4	138.1	203.2	42.9	
3 7/16		RFBA 307C CR													
3 1/2		RFBA 308C CR													
	80	RFBA 80MM-C CR													
	85	RFBA 85MM-C CR													
	90	RFBA 90MM-C CR													
	95	RFBA 95MM-C CR													
3 15/16		RFBA 315C CR	20980	81.8	10 1/4	7 3/4	10 61/64	5 5/8	2 1/8	6 1/2	5 1/4	6	8 7/8	2 1/8	7/8
4		RFBA 400C CR	93319	37.1	260.4	196.9	278.2	142.9	54.0	165.1	133.4	152.4	225.4	54.0	
	100	RFBA 100MM-C CR													
	105	RFBA 105MM-C CR													

Metric dimensions for reference only.
Not all parts are available from stock. Please contact customer service for availability (800) 626-2120.
For more information on bearing capabilities outside of our standard offering, please contact Application Engineering (800) 626-2093.

Sealmaster PN Gold Mounted Ball Bearings

Sealmaster PN Gold mounted bearings feature high phosphorus, electroless nickel coated steel insert with patented seal technology available in either setscrew or SKWEZLOC™ concentric locking collar, within a variety of 316 stainless casting high strength composite fluoropolymer coated cast iron housing configurations. The high performance triple lip seal is the latest innovation of over 10 patents on sealing technology. The combination of stainless flingers and FKM lip materials provide a strong contaminant resistance and GoldPlex FG (USDA H1) food grade grease loss. Specially engineered for industries with corrosive wash down environments such as food and beverage, pharmaceuticals and chemical processing. PN Gold mounted ball bearings provide outstanding performance in demanding corrosive environments.

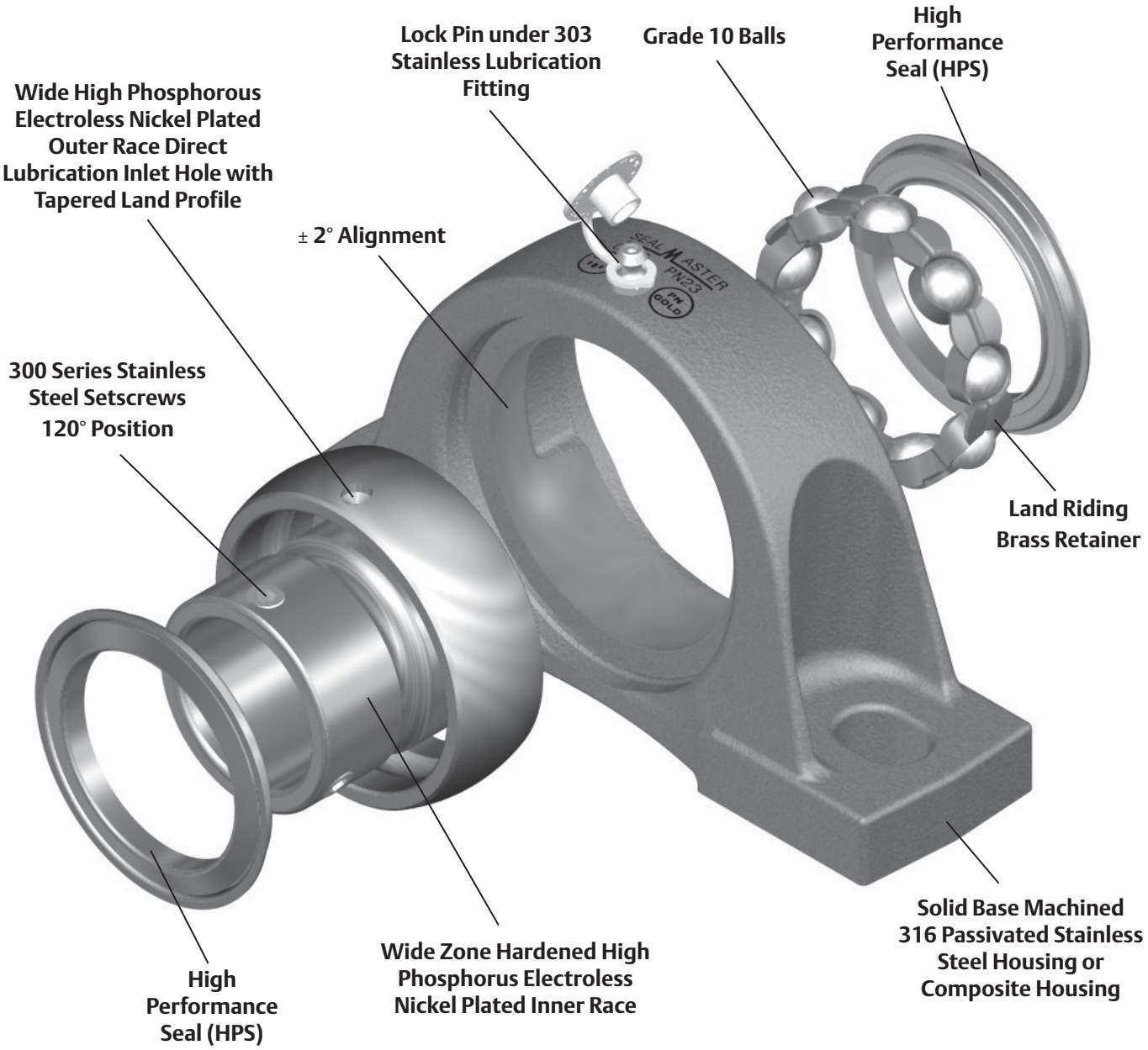

SEALMASTER®

Sealmaster PN Gold Nomenclature

Corrosion Resistant

Options

B - Machined For Bolt On End Cap And Backside Shield Included SF, SFT And FB Only

M - Medium Duty (where available)

Housing Type* (see below)

Housing Material

S - Stainless Steel

C - Composite

F - Fluoropolymer Coated Cast Iron†

Phosphorous Nickel

Bore Size

Inch - ##/16" (ex. 20/16 = 1 1/4")

R for 1 1/4" and 2" Reduced Only

Metric - Standard Duty - 2##, ## x 5 mm (ex. 05 = 25 mm)

Standard Option

T - SKWEZLOC Locking Collar

RMW - Reduced Maintenance Washdown, plugged no lube fitting

S - Obsolete Plugged "Sealed for Life" Option Replaced by RMW where available

CR B FS - PN16 T RMW

Housing Type*

P - Pillow Block

FT - 2 Bolt Flange

F - 4 Bolt Flange

FB - Flange Bracket

TB - Tapped Base

PL - Low Base Pillow Block

FC - Flange Cartridge

ST - Wide Slot Take Up

EHB - Hanger Bearing

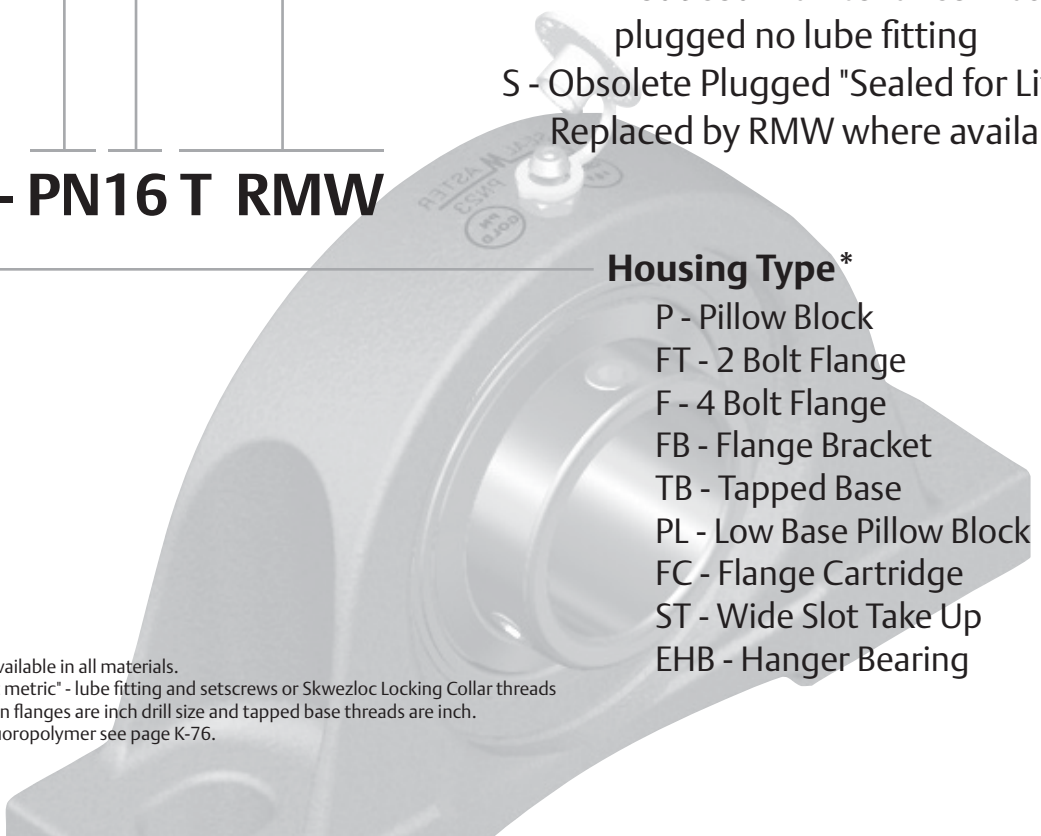

* All housing styles are not available in all materials.

** Metric bore units are "soft metric" - lube fitting and setscrews or Skwezloc Locking Collar threads are inch threads, bolt holes on flanges are inch drill size and tapped base threads are inch.

† For more information on fluoropolymer see page K-76.

Features and Benefits

Bearing Races

The inner and outer ring of the Sealmaster PN Gold are a high phosphorous electroless nickel plated 52100 steel for exceptional corrosion resistance.

Wide Outer Race

Sealmaster has the industry's widest outer race. The high phosphorous, electroless nickel outer race is 20 to 30% wider than industry standard outer races. This feature results in increased grease capacity, improved sealing options and increases the surface area for absorption of shock load.

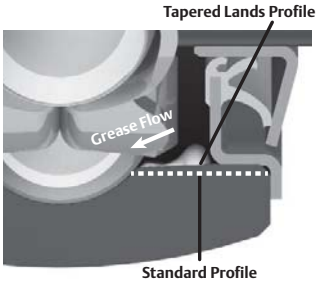

The outer race has a Tapered Land profile. The outer land surface in a conventional bearing is parallel to the axis of the inner ring. The Tapered Lands surface is tapered in a radial direction toward the bearing race. This subtle yet crucial design change ensures that lubricant will be easily redirected back to the raceway. With improved bearing lubricant circulation comes significantly longer bearing service life. This improved circulation and service life comes without any reductions in bearing radial or thrust capacities.

Note: The illustration to the left is an exaggerated figure to demonstrate the difference between standard vs. Tapered Lands.

For bearings that are maintained and relubricated on a regular basis, there is no significant difference in expected service life.

Multiple Locking Methods

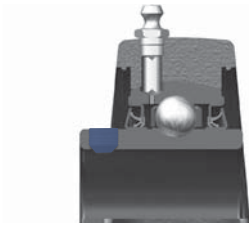

Setscrew Locking

300 series stainless steel 120° spaced, balanced three point contact minimizes inner ring distortion vibration, reduces noise, and improves reliability.

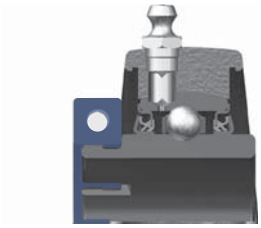

Skwezloc® Concentric Locking Collar

SKWEZLOC is a concentric collar clamp design that results in near-perfect concentricity of the shaft to bearing bore and maintains near perfect ball path roundness, while reducing fretting corrosion. This design eliminates the shaft damage of setscrew locking, and minimizes bearing induced vibration for smoother quieter operation. The collar is fluoropolymer coated with an Endurion* coated TORX head cap screw that outlasts stripping 12 times longer than hex head cap screws.

* The following trade names, trademarks and/or registered trademarks are used in this material by Regal Power Transmission Solutions are NOT owned or controlled by Regal Power Transmission Solutions and are believed to be owned by the following parties: Endurion ; OMNOVA Solutions Inc. Regal Power Transmission Solutionscannot and does not represent or warrant the accuracy of this information.

Features and Benefits continued

High Performance Seal (HPS)

The triple lip contact seal design provides multi-directional sealing to minimize contamination ingress and retain lubrication – standard on all units. The 304 stainless steel shell and flingers protect from incoming contaminants and provide wear resistant contact surface to all three seal lips. The grease cavities in seal assembly are factory-filled with H1 Food Grade lubricant prior to shipment for additional contaminant resistance.

The illustrations below show the relative performance of seals in a wet contamination test as well as the test itself. Complete bearings with seals are sprayed with a 5% salt solution at 100°F. The bearings operate continuously at 500 RPM for 3 hours and idle for 1 hour. The cyclical condition test is complete after 480 hours.

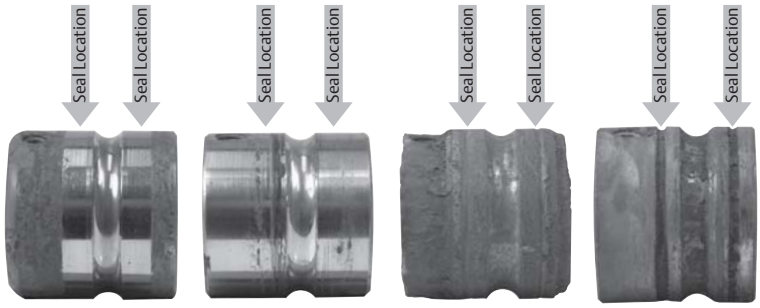

Sealmaster High Phosphorus Nickel | 440C Stainless Steel with Single Lip Rubber Seal | Zinc Coated with Single Lip Rubber Seal | Nickel Teflon Coated with Single Lip Rubber Seal

The graphic below illustrates the relative performance of rubber contact seals in a slurry contamination test. The bearing is submerged halfway into a sand, salt and water mixture (as shown in illustration). The bearing rotates while a separate motor stirs the mixture. The test is stopped when the slurry mixture leaks past the seal.

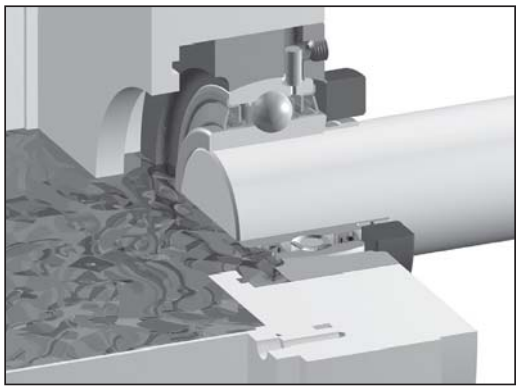

Simulation of Slurry Contamination Test

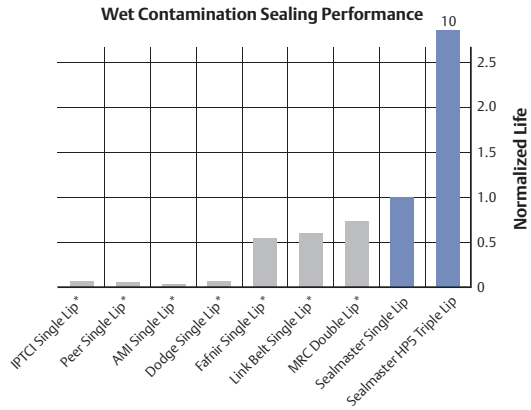

* The following trade names, trademarks and/or registered trademarks that follow are used in this material by Regal Power Transmission Solutions for comparison purposes only, are NOT owned or controlled by Regal Power Transmission Solutions and are believed to be owned by the following parties: AMI: Asahi Tec Corp. of japan; Dodge: Baldor Electric Company; Fafnir: Timken US Corporation; IPTCI: Paul E. Robbey Company; Link Belt: Rexnord Industries, Inc.; MRC: SKF USA Inc.; Peer: Peer Bearing Company. Regal Power Transmission Solutions cannot and does not represent or warrant the accuracy of this information.

Features and Benefits continued

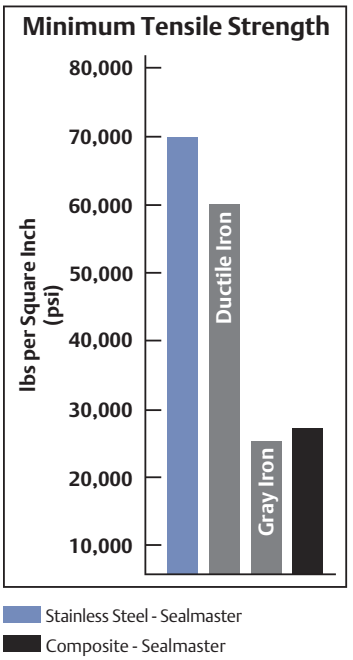

Stainless Steel Housing

High quality solid base designed investment cast passivated 316 stainless steel casting providing the highest amount corrosion resistance currently available for stainless steel housings. The investment cast process yields a smooth, easy to clean surface. The solid construction with machined base was designed for minimal gaps with no fillings.

Competitor Housing | Sealmaster Housing

Composite Housing

High strength composite with reinforced stainless steel bolt ferrules for high load capacity and increased strength around the bolt holes. The solid construction with machined base was designed for minimal gaps with no fillings.

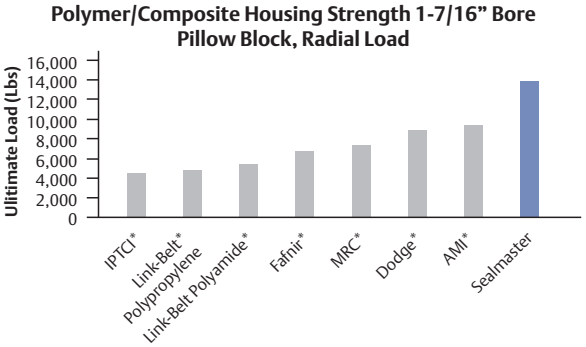

Competitor Housing | Sealmaster Housing

*Note: Trade names and trademarks can be found on page K-32

Features and Benefits continued

Specialized Food Grade Lubrication

The Sealmaster PN Gold bearings are factory filled with Sealmaster GoldPlex-FG (Food Grade) grease (USDA H1 approved) which is suitable for mounted bearing lubrication where incidental contact with food products may occur in any application where clean, routine lubrication is required. For more information on Sealmaster GoldPlex-FG see page L-6.

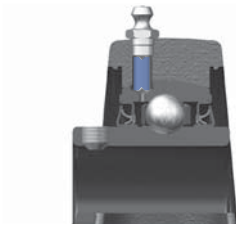

Lock Pin and Dimple

The Sealmaster exclusive locking pin and dimple system provides a direct lubricant into the bearing cavity & ball path instead of around a lubrication groove, prevents outer ring rotation (sometimes referred to as “creep”), and allows ±2° static misalignment of the bearing insert

Zone Hardening Inner Race

Sealmaster incorporates a unique heat treat process that hardens the inner race only where it is needed...under the ball path. The high phosphorous electroless nickel plated 52100 steel, zone hardened inner race results improved lock reliability as a result of less distortion at setscrew location and improved thread conformity resulting in improved clamping and resistance to setscrew back-out.

Land Riding Retainer

The Sealmaster unique land riding metal retainer design provides superior pocket clearance that allows for 360° grease circulation around the rolling elements resulting in better retained and utilized lubrication. The land riding design of the retainer minimizes wear on both Ball and retainer, while maximizing stability, which is especially important in applications involving vibration, shock loading or high operating speeds.

Accessories

Optional accessories are available and can be found in the Accessories section starting on page L-1.

SEALMASTER® PN Gold Mounted Ball Bearings

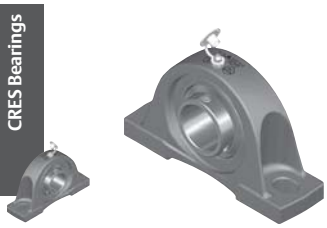

Duty: Standard

Housing: 316 Passivated Stainless Steel Pillow Block

Self-Alignment: +/- 2 Degrees

Lock: Setscrew

Seal: HPS

Temperature: -20° to 220°F

Grease: Sealmaster GoldPlex-FG

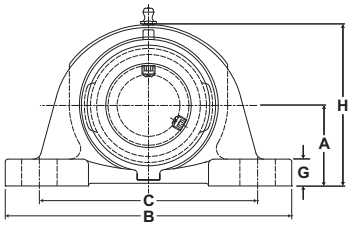

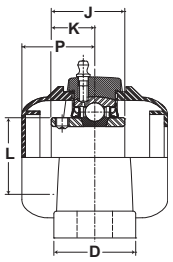

CRPS-PN Series Pillow Block Setscrew Locking

Bore Diameter		Part No	Bearing Insert No.	Basic Dynamic Rating lb/N	Dimensions inch/mm											Unit Wt. lb/kg	Open Cap	Closed Cap
					A	B	C		D	G	H	J	K	L	P	Bolt Size			
inch	mm						Min.	Max.											
3/4	-	CRPS-PN12	PN-12	2611	1 5/16	5	3 3/8	4 1/8	1 1/2	1/2	2 9/16	1 7/32	23/32	1 3/16	1 41/64	3/8	1.90	ECO-12	ECC-12
-	20	CRPS-PN204	PN-204	11614	33.3	127.0	85.7	104.8	38.1	12.7	65.1	31.0	18.3	30.2	41.7		.86		
1	-	CRPS-PN16	PN-16	2801	1 7/16	5 1/2	3 3/4	4 1/2	1 1/2	1/2	2 13/16	1 3/8	13/16	1 3/8	1 47/64	3/8	1.57	ECO-16	ECC-16
-	25	CRPS-PN205	PN-205	12459	36.5	139.7	95.3	114.3	38.1	12.7	71.4	34.9	20.6	34.9	44.1		.71		
1 3/16	-	CRPS-PN19	PN-19	4381	1 11/16	6 1/2	4 7/16	5 1/16	1 7/8	9/16	3 3/8	1 1/2	7/8	1 19/32	1 51/64	1/2	3.80	ECO-19	ECC-19
1 1/4	-	CRPS-PN20R	PN-20R	19488	42.9	165.1	112.7	128.6	47.6	14.3	85.7	38.1	22.2	40.5	45.6		1.72	ECO-20R	
-	30	CRPS-PN206	PN-206															ECO-19	
1 1/4	-	CRPS-PN20	PN-20	5782	1 7/8	6 9/16	4 11/16	5 5/16	1 7/8	5/8	3 3/4	1 11/16	1	1 55/64	1 59/64	1/2	4.50	ECO-20	ECC-23
1 3/8	-	CRPS-PN22	PN-22	25720	47.6	166.7	119.1	134.9	47.6	15.9	95.3	42.9	25.4	47.2	48.8		2.04	ECO-23	
1 7/16	-	CRPS-PN23	PN-23																
-	35	CRPS-PN207	PN-207																
1 1/2	-	CRPS-PN24	PN-24	7340	1 15/16	7 1/4	4 7/8	5 7/8	2 1/8	11/16	3 15/16	1 15/16	1 3/16	2 1/16	2 7/64	1/2	5.70	ECO-24	ECC-24
-	40	CRPS-PN208	PN-208	32650	49.2	184.2	123.8	149.2	54.0	17.5	100.0	49.2	30.2	52.4	53.6		2.59		
1 11/16	-	CRPS-PN27	PN-27	7901	2 1/8	7 1/2	5 7/16	6 1/16	2 1/8	11/16	4 1/4	1 15/16	1 3/16	2 19/64	2 1/8	1/2	6.50	ECO-27	ECC-27
1 3/4	-	CRPS-PN28	PN-28	35145	54.0	190.5	138.1	154.0	54.0	17.5	108.0	49.2	30.2	58.3	54.0		2.95	N/A	
-	45	CRPS-PN209	PN-209															N/A	
1 15/16	-	CRPS-PN31	PN-31	7889	2 1/4	8 1/8	6	6 1/2	2 3/8	3/4	4 9/16	2 1/32	1 9/32	2 15/32	2 5/64	5/8	7.90	ECO-31	ECC-31
2	-	CRPS-PN32R	PN-32R	35092	57.2	206.4	152.4	165.1	60.3	19.1	115.9	51.6	32.5	62.7	52.8		3.58	N/A	
-	50	CRPS-PN210	PN-210															ECO-31	
2	-	CRPS-PN32	PN-32	9752	2 1/2	8 5/8	6 1/2	7	2 3/8	3/4	5	2 3/16	1 5/16	2 23/32	2 21/64	5/8	9.70	ECO-35	ECC-35
2 3/16	-	CRPS-PN35	PN-35	43379	63.5	219.1	165.1	177.8	60.3	19.1	127.0	55.6	33.3	69.1	59.1		4.40		
-	55	CRPS-PN211	PN-211																
2 3/8	-	CRPS-PN38	PN-38	11789	2 3/4	9 1/2	6 7/8	7 5/8	2 3/4	7/8	5 9/16	2 9/16	1 9/16	2 63/64	2 37/64	5/8	13.70	ECO-39	ECC-35
2 7/16	-	CRPS-PN39	PN-39	52440	69.9	241.3	174.6	193.7	69.9	22.2	141.3	65.1	39.7	75.8	65.5		6.21		
-	60	CRPS-PN212	PN-212																

Metric dimensions for reference only.
Not all parts are available from stock. Please contact customer service for availability (800) 626-2120.
For more information on bearing capabilities outside of our standard offering, please contact Application Engineering (800) 626-2093.

PN Gold Mounted Ball Bearings

SEALMASTER®

Duty: Standard

Housing: 316 Passivated Stainless Steel Pillow Block

Self-Alignment: +/- 2 Degrees

Lock: Skwezloc Locking Collar

Seal: HPS

Temperature: -20° to 220°F

Grease: Sealmaster GoldPlex-FG

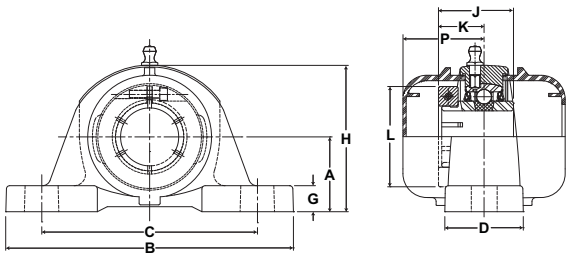

CRPS-PN-T Series Pillow Block Skwezloc Locking Collar

Bore Diameter inch	Bore Diameter mm	Part No.	Bearing Insert No.	Basic Dynamic Rating lb/N	Dimensions inch/mm A	B	C Min.	C Max.	D	G	H	J	K	L	P	Bolt Size	Unit Wt. lb/kg	Open Cap	Closed Cap
3/4	-	CRPS-PN12T	PN-12T	2611	1 5/16	5	3 3/8	4 1/8	1 1/2	1/2	2 9/16	1 7/32	23/32	1 3/4	1 41/64	3/8	1.90	ECO-12	ECC-12
-	20	CRPS-PN204T	PN-204T	11614	33.3	127.0	85.7	104.8	38.1	12.7	65.1	31.0	18.3	44.5	41.7		.86		
1	-	CRPS-PN16T	PN-16T	2801	1 7/16	5 1/2	3 3/4	4 1/2	1 1/2	1/2	2 13/16	1 3/8	13/16	1 15/16	1 47/64	3/8	1.57	ECO-16	ECC-16
-	25	CRPS-PN205T	PN-205T	12459	36.5	139.7	95.3	114.3	38.1	12.7	71.4	34.9	20.6	49.2	44.1		.71		
1 3/16	-	CRPS-PN19T	PN-19T	4381	1 11/16	6 1/2	4 7/16	5 1/16	1 7/8	9/16	3 3/8	1 1/2	7/8	2 3/16	1 51/64	1/2	3.60	ECO-19	ECC-19
1 1/4	-	CRPS-PN20RT	PN-20RT	19488	42.9	165.1	112.7	128.6	47.6	14.3	85.7	38.1	22.2	55.6	45.6		1.63	ECO-20R	
-	30	CRPS-PN206T	PN-206T															ECO-19	
1 1/4	-	CRPS-PN20T	PN-20T	5782	1 7/8	6 9/16	4 11/16	5 5/16	1 7/8	5/8	3 3/4	1 11/16	1	2 7/16	1 59/64	1/2	4.50	ECO-20	ECC-23
				25720	47.6	166.7	119.1	134.9	47.6	15.9	95.3	42.9	25.4	61.9	48.8		2.04		
1 3/8	-	CRPS-PN22T	PN-22T	5782	1 7/8	6 9/16	4 11/16	5 5/16	1 7/8	5/8	3 3/4	1 11/16	1	2 9/16	1 59/64	1/2	4.50	ECO-23	ECC-23
1 7/16	-	CRPS-PN23T	PN-23T	25720	47.6	166.7	119.1	134.9	47.6	15.9	95.3	42.9	25.4	65.1	48.8		2.04		
-	35	CRPS-PN207T	PN-207T																
1 1/2	-	CRPS-PN24T	PN-24T	7340	1 15/16	7 1/4	4 7/8	5 7/8	2 1/8	11/16	3 15/16	1 15/16	1 3/16	2 11/16	2 7/64	1/2	5.70	ECO-24	ECC-24
-	40	CRPS-PN208T	PN-208T	32650	49.2	184.2	123.8	149.2	54.0	17.5	100.0	49.2	30.2	68.3	53.6		2.59		
1 11/16	-	CRPS-PN27T	PN-27T	7901	2 1/8	7 1/2	5 7/16	6 1/16	2 1/8	11/16	4 1/4	1 15/16	1 3/16	2 15/16	2 1/8	1/2	6.50	ECO-27	ECC-27
1 3/4	-	CRPS-PN28T	PN-28T	35145	54.0	190.5	138.1	154.0	54.0	17.5	108.0	49.2	30.2	74.6	54.0		2.95	N/A	
-	45	CRPS-PN209T	PN-209T															ECO-27	
1 15/16	-	CRPS-PN31T	PN-31T	7889	2 1/4	8 1/8	6	6 1/2	2 3/8	3/4	4 9/16	2 1/32	1 9/32	3 3/8	2 5/64	5/8	7.90	ECO-31	ECC-31
2	-	CRPS-PN32RT	PN-31RT	35092	57.2	206.4	152.4	165.1	60.3	19.1	115.9	51.6	32.5	85.7	52.8		3.58		
-	50	CRPS-PN210T	PN-210T																
2	-	CRPS-PN32T	PN-32T	9752	2 1/2	8 5/8	6 1/2	7	2 3/8	3/4	5	2 3/16	1 5/16	3 1/2	2 21/64	5/8	9.70	ECO-35	ECC-35
				43379	63.5	219.1	165.1	177.8	60.3	19.1	127.0	55.6	33.3	88.9	59.1		4.40		
2 3/16	-	CRPS-PN35T	PN-35T	9752	2 1/2	8 5/8	6 1/2	7	2 3/8	3/4	5	2 3/16	1 5/16	3 5/8	2 21/64	5/8	9.70	ECO-35	ECC-35
-	55	CRPS-PN211T	PN-211T	43379	63.5	219.1	165.1	177.8	60.3	19.1	127.0	55.6	33.3	92.1	59.1		4.40		
2 3/8	-	CRPS-PN38T	PN-38T	11789	2 3/4	9 1/2	6 7/8	7 5/8	2 3/4	7/8	5 9/16	2 9/16	1 9/16	4 1/8	2 37/64	5/8	13.70	ECO-39	ECC-39
2 7/16	-	CRPS-PN39T	PN-39T	52440	69.9	241.3	174.6	193.7	69.9	22.2	141.3	65.1	39.7	104.8	65.5		6.21		
-	60	CRPS-PN212T	PN-212T																

Metric dimensions for reference only.

Not all parts are available from stock. Please contact customer service for availability (800) 626-2120.

For more information on bearing capabilities outside of our standard offering, please contact Application Engineering (800) 626-2093.

SEALMASTER® *PN Gold Mounted Ball Bearings*

Duty: Standard

Housing: 316 Passivated Stainless Steel Four Bolt Flange

Self-Alignment: +/- 2 Degrees

Lock: Setscrew

Seal: HPS

Temperature: -20° to 220°F

Grease: Sealmaster GoldPlex-FG

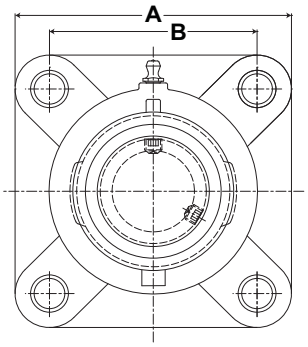

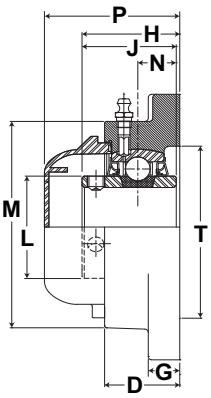

CRFS-PN Series 4 Bolt Flange Setscrew Locking

Bore Diameter inch	Bore Diameter mm	Part No.	Bearing Insert No.	Basic Dynamic Rating lb/N	Dimensions inch/mm A	B	D	G	H	J	L	M	N	P	T	Bolt Size	Unit Wt. lb/kg	Open Cap	Closed Cap	Backside Shield
3/4	-	CRFS-PN12	PN-12	2611 11614	3 3/8 85.7	2 1/2 63.5	31/32 24.6	7/16 11.1	1 9/32 32.5	1 7/32 31.0	1 3/16 30.2	2 1/2 63.5	1/2 12.7	2 19/64 58.3	2 50.8	3/8	1.50 .68	ECO-12	ECC-12	4BSS-12
-	20	CRFS-PN204	PN-204																	
1	-	CRFS-PN16	PN-16	2801 12459	3 3/4 95.3	2 3/4 69.9	1 5/64 27.4	17/32 13.5	1 7/16 36.5	1 3/8 34.9	1 3/8 34.9	2 23/32 69.1	9/16 14.3	2 7/16 61.9	2 3/8 60.3	7/16	2.10 .95	ECO-16	ECC-16	4BSS-16
-	25	CRFS-PN205	PN-205																	
1 3/16	-	CRFS-PN19	PN-19	4381 19488	4 1/4 108.0	3 1/4 82.6	1 7/32 31.0	17/32 13.5	1 9/16 39.7	1 1/2 38.1	1 19/32 40.5	3 7/32 81.8	5/8 15.9	2 37/64 65.5	2 7/8 73.0	7/16	3.05 1.38	ECO-19	ECC-19	4BSS-19
1 1/4	-	CRFS-PN20R	PN-20R															ECO-20R		4BSS-20R
-	30	CRFS-PN206	PN-206															ECO-19		4BSS-19
1 1/4	-	CRFS-PN20	PN-20	5782 25720	4 5/8 117.5	3 5/8 92.1	1 11/32 34.1	9/16 14.3	1 3/4 44.5	1 11/16 42.9	1 55/64 47.2	3 3/4 95.3	11/16 17.5	2 3/4 69.9	3 5/16 84.1	1/2	4.10 1.86	ECO-20	ECC-23	4BSS-20
1 3/8	-	CRFS-PN22	PN-22															ECO-23		4BSS-22
1 7/16	-	CRFS-PN23	PN-23																	4BSS-23
-	35	CRFS-PN207	PN-207																	4BSS-22
1 1/2	-	CRFS-PN24	PN-24	7340 32650	5 1/8 130.2	4 101.6	1 1/2 38.1	9/16 14.3	2 1/64 51.2	1 15/16 49.2	2 1/16 52.4	4 5/64 103.6	3/4 19.1	3 1/64 76.6	3 1/2 88.9	1/2	5.50 2.49	ECO-24	ECC-24	4BSS-24
-	40	CRFS-PN208	PN-208																	N/A
1 11/16	-	CRFS-PN27	PN-27	7901 35145	5 3/8 136.5	4 1/8 104.8	1 9/16 39.7	9/16 14.3	2 3/64 52.0	1 15/16 49.2	2 19/64 58.3	4 21/64 109.9	3/4 19.1	3 3/64 77.4	3 7/8 98.4	9/16	5.70 2.59	ECO-27	ECC-27	4BSS-27
1 3/4	-	CRFS-PN28	PN-28															N/A		N/A
-	45	CRFS-PN209	PN-209																	
1 15/16	-	CRFS-PN31	PN-31	7889 35092	5 5/8 142.9	4 3/8 111.1	1 9/16 39.7	9/16 14.3	2 5/32 54.8	2 1/32 51.6	2 15/32 62.7	4 35/64 115.5	3/4 19.1	3 3/64 77.4	4 101.6	9/16	6.70 3.04	ECO-31	ECC-31	4BSS-31
2	-	CRFS-PN32R	PN-32R																	N/A
-	50	CRFS-PN210	PN-210																	4BSS-31
2	-	CRFS-PN32	PN-32	9752 43379	6 3/8 161.9	5 1/8 130.2	1 3/4 44.5	13/16 20.6	2 5/16 58.7	2 3/16 55.6	2 23/32 69.1	5 3/16 131.8	7/8 22.2	3 13/32 86.5	4 1/4 108.0	5/8	10.50 4.76	ECO-35	ECC-35	4BSS-32
2 3/16	-	CRFS-PN35	PN-35																	4BSS-35
-	55	CRFS-PN211	PN-211																	
2 3/8	-	CRFS-PN38	PN-38	11789 52440	6 7/8 174.6	5 5/8 142.9	1 15/16 49.2	13/16 20.6	2 11/16 68.3	2 9/16 65.1	2 63/64 75.8	5 7/16 138.1	1 25.4	3 51/64 96.4	5 127.0	5/8	12.00 5.44	ECO-39	ECC-39	4BSS-38
2 7/16	-	CRFS-PN39	PN-39																	4BSS-39
-	60	CRFS-PN212	PN-212																	4BSS-38

Metric dimensions for reference only.
Not all parts are available from stock. Please contact customer service for availability (800) 626-2120.
For more information on bearing capabilities outside of our standard offering, please contact Application Engineering (800) 626-2093.

PN Gold Mounted Ball Bearings

SEALMASTER®

Duty: Standard

Housing: 316 Passivated Stainless Steel Four Bolt Flange

Self-Alignment: +/- 2 Degrees

Lock: Skwezloc Locking Collar

Seal: HPS

Temperature: -20° to 220°F

Grease: Sealmaster GoldPlex-FG

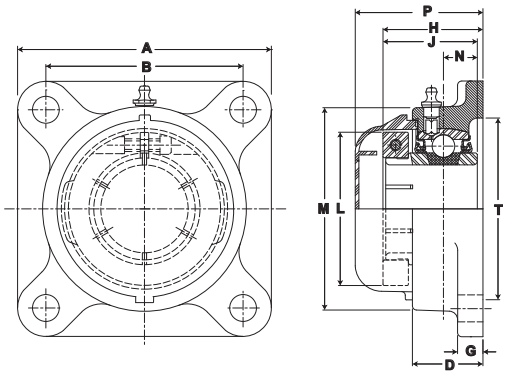

CRFS-PN-T Series 4 Bolt Flange Skwezloc Locking Collar

Bore Diameter inch	Bore Diameter mm	Part No.	Bearing Insert No.	Basic Dynamic Rating lb/N	Dimensions inch/mm A	B	D	G	H	J	L	M	N	P	T	Bolt Size	Unit Wt. lb/kg	Open Cap	Closed Cap	Backside Shield
3/4	-	CRFS-PN12T	PN-12T	2611 11614	3 3/8 85.7	2 1/2 63.5	31/32 24.6	7/16 11.1	1 9/32 32.5	1 7/32 31.0	1 3/4 44.5	2 1/2 63.5	1/2 12.7	2 9/32 57.9	2 50.8	3/8	1.50 .68	ECO-12	ECC-12	4BSS-12
-	20	CRFS-PN204T	PN-204T																	
1	-	CRFS-PN16T	PN-16T	2801 12459	3 3/4 95.3	2 3/4 69.9	1 5/64 27.4	17/32 13.5	1 7/16 36.5	1 3/8 34.9	1 15/16 49.2	2 45/64 68.7	9/16 14.3	2 7/16 61.9	2 21/64 59.1	7/16	2.10 .95	ECO-16	ECC-16	4BSS-16
-	25	CRFS-PN205T	PN-205T																	
1 3/16	-	CRFS-PN19T	PN-19T	4381 19488	4 1/4 108.0	3 1/4 82.6	1 7/32 31.0	17/32 13.5	1 9/16 39.7	1 1/2 38.1	2 3/16 55.6	3 13/64 81.4	5/8 15.9	2 9/16 65.1	2 7/8 73.0	7/16	3.05 1.38	ECO-19	ECC-19	4BSS-19
1 1/4	-	CRFS-PN20RT	PN-20RT															ECO-20R		4BSS-20R
-	30	CRFS-PN206T	PN-206T															ECO-19		4BSS-19
1 1/4	-	CRFS-PN20T	PN-20T	5782 25720	4 5/8 117.5	3 5/8 92.1	1 11/32 34.1	9/16 14.3	1 3/4 44.5	1 11/16 42.9	2 7/16 61.9	3 3/4 95.3	11/16 17.5	2 3/4 69.9	3 5/16 84.1	1/2	4.10 1.86	ECO-20	ECC-23	4BSS-20
1 3/8	-	CRFS-PN22T	PN-22T	5782 25720	4 5/8 117.5	3 5/8 92.1	1 11/32 34.1	9/16 14.3	1 3/4 44.5	1 11/16 42.9	2 9/16 65.1	3 3/4 95.3	11/16 17.5	2 1/4 57.2	3 5/16 84.1	1/2	4.00 1.81	ECO-23	ECC-23	4BSS-22
1 7/16	-	CRFS-PN23T	PN-23T																	4BSS-23
-	35	CRFS-PN207T	PN-207T																	4BSS-22
1 1/2	-	CRFS-PN24T	PN-24T	7340 32650	5 1/8 130.2	4 101.6	1 1/2 38.1	9/16 14.3	2 1/64 51.2	1 15/16 49.2	2 11/16 68.3	4 5/64 103.6	3/4 19.1	3 1/64 76.6	3 1/2 88.9	1/2	5.50 2.49	ECO-24	ECC-24	4BSS-24
-	40	CRFS-PN208T	PN-208T																	N/A
1 11/16	-	CRFS-PN27T	PN-27T	7901 35145	5 3/8 136.5	4 1/8 104.8	1 9/16 39.7	9/16 14.3	2 3/64 52.0	1 15/16 49.2	2 15/16 74.6	4 21/64 109.9	3/4 19.1	3 3/64 77.4	3 7/8 98.4	9/16	5.70 2.59	ECO-27	ECC-27	4BSS-27
1 3/4	-	CRFS-PN28T	PN-28T															N/A		N/A
-	45	CRFS-PN209T	PN-209T																	
1 15/16	-	CRFS-PN31T	PN-31T	7889 35092	5 5/8 142.9	4 3/8 111.1	1 9/16 39.7	9/16 14.3	2 5/32 54.8	2 1/32 51.6	3 3/8 85.7	4 35/64 115.5	3/4 19.1	3 3/64 77.4	4 101.6	9/16	6.70 3.04	ECO-31	ECC-31	4BSS-31
2	-	CRFS-PN32RT	PN-32RT																	N/A
-	50	CRFS-PN210T	PN-210T																	4BSS-31
2	-	CRFS-PN32T	PN-32T	9752 43379	6 3/8 161.9	5 1/8 130.2	1 3/4 44.5	13/16 20.6	2 5/16 58.7	2 3/16 55.6	3 1/2 88.9	5 3/16 131.8	7/8 22.2	3 13/32 86.5	4 1/4 108.0	5/8	10.50 4.76	ECO-32	ECC-35	4BSS-32
2 3/16	-	CRFS-PN35T	PN-35T	9752 43379	6 3/8 161.9	5 1/8 130.2	1 3/4 44.5	13/16 20.6	2 5/16 58.7	2 3/16 55.6	3 5/8 92.1	5 3/16 131.8	7/8 22.2	3 13/32 86.5	4 1/4 108.0	5/8	10.50 4.76	ECO-35	ECC-35	4BSS-35
-	55	CRFS-PN211T	PN-211T																	
2 3/8	-	CRFS-PN38T	PN-38T	11789 52440	6 7/8 174.6	5 5/8 142.9	1 15/16 49.2	13/16 20.6	2 11/16 68.3	2 9/16 65.1	4 1/8 104.8	5 7/16 138.1	1 25.4	3 51/64 96.4	5 127.0	5/8	11.80 5.35	ECO-38	ECC-38	4BSS-38
2 7/16	-	CRFS-PN39T	PN-39T															ECO-39	ECC-39	4BSS-39
-	60	CRFS-PN212T	PN-212T															ECO-38	ECC-38	4BSS-38

Metric dimensions for reference only.
Not all parts are available from stock. Please contact customer service for availability (800) 626-2120.
For more information on bearing capabilities outside of our standard offering, please contact Application Engineering (800) 626-2093.

SEALMASTER® PN Gold Mounted Ball Bearings

Duty: Standard

Housing: 316 Passivated Stainless Steel Two Bolt Flange

Self-Alignment: +/- 2 Degrees

Lock: Setscrew

Seal: HPS

Temperature: -20° to 220°F

Grease: Sealmaster GoldPlex-FG

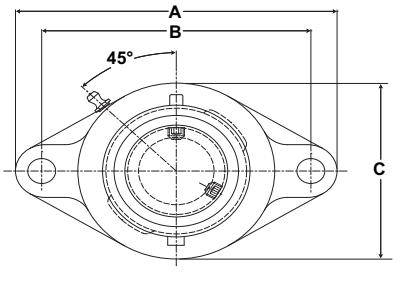

CRFTS-PN Series 2 Bolt Flange Setscrew Locking

Bore Diameter inch	Bore Diameter mm	Part No.	Bearing Insert No.	Basic Dynamic Rating lb/N	Dimensions inch/mm A	B	C	D	G	H	J	L	N	P	T	Bolt Size	Unit Wt. lb/kg	Open Cap	Closed Cap	Backside Shield
3/4	-	CRFTS-PN12	PN-12	2611 11614	4 13/32 111.9	3 17/32 89.7	2 3/8 60.3	31/32 24.6	7/16 11.1	1 9/32 32.5	1 7/32 31.0	1 3/16 30.2	1/2 12.7	2 19/64 58.3	2 50.8	3/8	1.20 .54	ECO-12	ECC-12	2BSS-12
-	20	CRFTS-PN204	PN-204																	
1	-	CRFTS-PN16	PN-16	2801 12459	4 7/8 123.8	3 57/64 98.8	2 3/4 69.9	1 5/64 27.4	17/32 13.5	1 7/16 36.5	1 3/8 34.9	1 3/8 34.9	9/16 14.3	2 7/16 61.9	2 3/8 60.3	7/16	1.60 .73	ECO-16	ECC-16	2BSS-16
-	25	CRFTS-PN205	PN-205																	
1 3/16	-	CRFTS-PN19	PN-19	4381 19488	5 9/16 141.3	4 19/32 116.7	3 1/4 82.6	1 7/32 31.0	17/32 13.5	1 9/16 39.7	1 1/2 38.1	1 19/32 40.5	5/8 15.9	2 9/16 65.1	2 7/8 73.0	7/16	2.36 1.07	ECO-19	ECC-19	2BSS-19
1 1/4	-	CRFTS-PN20R	PN-20R															ECO-20R		2BSS-20R
-	30	CRFTS-PN206	PN-206															ECO-19		2BSS-19
1 1/4	-	CRFTS-PN20	PN-20	5782 25720	6 1/8 155.6	5 1/8 130.2	3 3/4 95.3	1 11/32 34.1	9/16 14.3	1 3/4 44.5	1 11/16 42.9	1 55/64 47.2	11/16 17.5	2 3/4 69.9	3 5/16 84.1	1/2	3.20 1.45	ECO-20	ECC-23	2BSS-20
1 3/8	-	CRFTS-PN22	PN-22															ECO-23		2BSS-22
1 7/16	-	CRFTS-PN23	PN-23																	2BSS-23
-	35	CRFTS-PN207	PN-207																	N/A
1 1/2	-	CRFTS-PN24	PN-24	7340 32650	6 3/4 171.5	5 21/32 143.7	4 1/8 104.8	1 1/2 38.1	9/16 14.3	2 1/64 51.2	1 15/16 49.2	2 1/16 52.4	3/4 19.1	3 1/64 76.6	3 1/2 88.9	1/2	4.50 2.04	ECO-24	ECC-24	2BSS-24
1.575	40	CRFTS-PN208	PN-208																	2BSS-208
1 11/16	-	CRFTS-PN27	PN-27	7901 35145	7 1/16 179.4	5 27/32 148.4	4 3/8 111.1	1 9/16 39.7	9/16 14.3	2 3/64 52.0	1 15/16 49.2	2 19/64 58.3	3/4 19.1	3 3/64 77.4	3 3/8 85.7	9/16	5.00 2.27	ECO-27	ECC-27	2BSS-27
1 3/4	-	CRFTS-PN28	PN-28															N/A		N/A
-	45	CRFTS-PN209	PN-209																	
1 15/16	-	CRFTS-PN31	PN-31	7889 35092	7 7/16 188.9	6 3/16 157.2	4 9/16 115.9	1 9/16 39.7	9/16 14.3	2 5/32 54.8	2 1/32 51.6	2 15/32 62.7	3/4 19.1	3 1/16 77.8	4 101.6	9/16	5.40 2.45	ECO-31	ECC-31	2BSS-31
2	-	CRFTS-PN32R	PN-32R																	N/A
-	50	CRFTS-PN210	PN-210																	
2	-	CRFTS-PN32	PN-32	9752 43379	8 1/2 215.9	7 1/4 184.2	5 1/4 133.4	1 3/4 44.5	13/16 20.6	2 5/16 58.7	2 3/16 55.6	2 23/32 69.1	7/8 22.2	3 13/32 86.5	4 1/4 108.0	5/8	8.40 3.81	ECO-35	ECC-35	N/A
2 3/16	-	CRFTS-PN35	PN-35																	2BSS-35
-	55	CRFTS-PN211	PN-211																	

Metric dimensions for reference only.
Not all parts are available from stock. Please contact customer service for availability (800) 626-2120.
For more information on bearing capabilities outside of our standard offering, please contact Application Engineering (800) 626-2093.

PN Gold Mounted Ball Bearings

SEALMASTER®

Duty: Standard

Housing: 316 Passivated Stainless Steel Two Bolt Flange

Self-Alignment: +/- 2 Degrees

Lock: Skwezloc Locking Collar

Seal: HPS

Temperature: -20° to 220°F

Grease: Sealmaster GoldPlex-FG

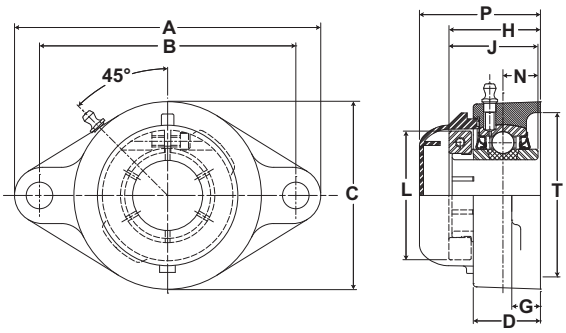

CRFTS-PN-T Series 2 Bolt Flange Skwezloc Locking Collar

Bore Diameter inch	Bore Diameter mm	Part No.	Bearing Insert No.	Basic Dynamic Rating lb/N	Dimensions inch/mm A	B	C	D	G	H	J	L	N	P	T	Bolt Size	Unit Wt. lb/kg	Open Cap	Closed Cap	Backside Shield
3/4	-	CRFTS-PN12T	PN-12T	2611 11614	4 13/32 111.9	3 17/32 89.7	2 3/8 60.3	31/32 24.6	7/16 11.1	1 9/32 32.5	2 1/2 63.5	1 3/4 44.5	1/2 12.7	2 17/64 57.5	2 50.8	3/8	1.20 .54	ECO-12	ECC-12	2BSS-12
-	20	CRFTS-PN204T	PN-204T																	
1	-	CRFTS-PN16T	PN-16T	2801 12459	4 7/8 123.8	3 57/64 98.8	2 3/4 69.9	1 5/64 27.4	17/32 13.5	1 7/16 36.5	2 3/4 69.9	1 15/16 49.2	9/16 14.3	2 7/16 61.9	2 3/16 55.6	7/16	1.60 .73	ECO-16	ECC-16	2BSS-16
-	25	CRFTS-PN205T	PN-205T																	
1 3/16	-	CRFTS-PN19T	PN-19T	4381 19488	5 9/16 141.3	4 19/32 116.7	3 1/4 82.6	1 7/32 31.0	17/32 13.5	1 9/16 39.7	3 1/4 82.6	2 3/16 55.6	5/8 15.9	2 37/64 65.5	2 9/16 65.1	7/16	2.20 1.00	ECO-19	ECC-19	2BSS-19
1 1/4	-	CRFTS-PN20RT	PN-20RT															ECO-20R		2BSS-20R
-	30	CRFTS-PN206T	PN-206T															ECO-19		2BSS-19
1 1/4	-	CRFTS-PN20T	PN-20T	5782 25720	6 1/8 155.6	5 1/8 130.2	3 3/4 95.3	1 11/32 34.1	9/16 14.3	1 3/4 44.5	3 3/4 95.3	2 7/16 61.9	11/16 17.5	2 25/32 70.6	2 15/16 74.6	1/2	3.20 1.45	ECO-20	ECC-23	2BSS-20
1 3/8	-	CRFTS-PN22T	PN-22T	5782 25720	6 1/8 155.6	5 1/8 130.2	3 3/4 95.3	1 11/32 34.1	9/16 14.3	1 3/4 44.5	3 3/4 95.3	2 9/16 65.1	11/16 17.5	2 25/32 70.6	2 15/16 74.6	1/2	3.40 1.54	ECO-23	ECC-23	2BSS-22
1 7/16	-	CRFTS-PN23T	PN-23T																	2BSS-23
-	35	CRFTS-PN207T	PN-207T																	2BSS-22
1 1/2	-	CRFTS-PN24T	PN-24T	7340 32650	6 3/4 171.5	5 21/32 143.7	4 1/8 104.8	1 1/2 38.1	9/16 14.3	2 1/64 51.2	4 1/8 104.8	2 11/16 68.3	3/4 19.1	3 3/64 77.4	3 19/64 83.7	1/2	4.50 2.04	ECO-24	ECC-24	2BSS-24
-	40	CRFTS-PN208T	PN-208T																	2BSS-208
1 11/16	-	CRFTS-PN27T	PN-27T	7901 35145	7 1/16 179.4	5 27/32 148.4	4 3/8 111.1	1 9/16 39.7	9/16 14.3	2 3/64 52.0	4 3/8 111.1	2 15/16 74.6	3/4 19.1	3 5/64 78.2	3 7/8 98.4	9/16	5.00 2.27	ECO-27	ECC-27	2BSS-27
1 3/4	-	CRFTS-PN28T	PN-28T															N/A		N/A
-	45	CRFTS-PN209T	PN-209T																	
1 15/16	-	CRFTS-PN31T	PN-31T	7889 35092	7 7/16 188.9	6 3/16 157.2	4 9/16 115.9	1 9/16 39.7	9/16 14.3	2 5/32 54.8	4 9/16 115.9	3 3/8 85.7	3/4 19.1	3 5/64 78.2	4 101.6	9/16	6.70 3.04	ECO-31	ECC-31	2BSS-31
2	-	CRFTS-PN32RT	PN-32RT																	N/A
-	50	CRFTS-PN210T	PN-210T																	
2	-	CRFTS-PN32T	PN-32T	9752 43379	8 1/2 215.9	7 1/4 184.2	5 1/4 133.4	1 3/4 44.5	13/16 20.6	2 5/16 58.7	5 1/4 133.4	3 1/2 88.9	7/8 22.2	3 27/64 86.9	4 1/4 108.0	5/8	8.40 3.81	ECO-35	ECC-35	N/A
2 3/16	-	CRFTS-PN35T	PN-35T	9752 43379	8 1/2 215.9	7 1/4 184.2	5 1/4 133.4	1 3/4 44.5	13/16 20.6	2 5/16 58.7	5 1/4 133.4	3 5/8 92.1	7/8 22.2	3 27/64 86.9	4 1/4 108.0	5/8	8.40 3.81	ECO-35	ECC-35	2BSS-35
-	55	CRFTS-PN211T	PN-211T																	

Metric dimensions for reference only.

Not all parts are available from stock. Please contact customer service for availability (800) 626-2120.

For more information on bearing capabilities outside of our standard offering, please contact Application Engineering (800) 626-2093.

SEALMASTER® *PN Gold Mounted Ball Bearings*

Duty: Standard

Housing: 316 Passivated Stainless Steel Four Bolt Reduced Flange

Self-Alignment: +/- 2 Degrees

Lock: Skwezloc Locking Collar

Seal: HPS

Temperature: -20° to 220°F

Grease: Sealmaster GoldPlex-FG

Relube: Reduced Maintenance

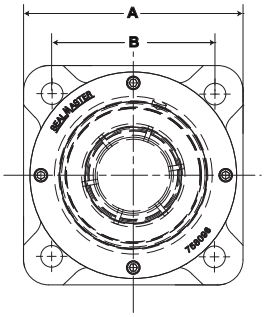

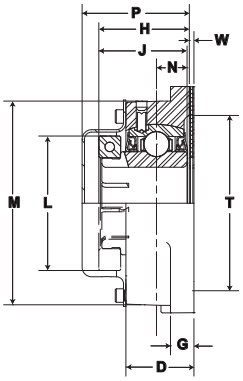

CRBFRS-PN-T RMW Series 4 Bolt Reduced Flange Skwezloc Locking Collar

Bore Diameter		Part No.*	Bearing Insert No.	Basic Dynamic Rating lb/N	Dimensions inch/mm													Unit Wt. lb/kg	Open Cap*	Closed Cap*	Backside Shield
inch	mm				A	B	D	G	H	L	J	M	N	P	T	W	Bolt Size				
1 7/16	-	CRBFRS-PN23T RMW	SK-2556	5782 25720	4 3/8 111.1	3 1/4 82.6	1 1/4 31.8	9/16 14.3	1 25/32 45.2	2 11/16 68.3	1 49/64 44.8	4 7/64 104.4	7/8 22.2	1 31/64 37.7	3 1/2 88.9	29/32 23.0	7/16	5.50 2.49	BEO-24	BEC-24	S-5134GS
1 1/2	-	CRBFRS-PN24T RMW	SK-2540																		S-5110GS
-	40	CRBFRS-PN208T RMW	SK-2555																		S-4492GS

* Standard option is as shown with Bolt On Cap, SKWEZLOC Locking Collar, Reduced Maintenance Option, with Back Side Shield.

Metric dimensions for reference only.
Not all parts are available from stock. Please contact customer service for availability (800) 626-2120.
For more information on bearing capabilities outside of our standard offering, please contact Application Engineering (800) 626-2093.

PN Gold Mounted Ball Bearings

SEALMASTER®

Duty: Standard

Housing: 316 Passivated Stainless Steel Two Bolt Reduced Flange

Self-Alignment: +/- 2 Degrees

Lock: Skwezloc Locking Collar

Seal: HPS

Temperature: -20° to 220°F

Grease: Sealmaster GoldPlex-FG

Relube: Reduced Maintenance

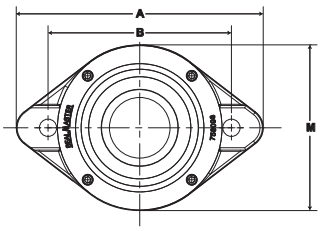

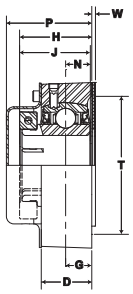

CRBFTRS-PN-T RMW Series 2 Bolt Reduced Flange Skwezloc Locking Collar

Bore Diameter		Part No.*	Bearing Insert No.	Basic Dynamic Rating lb/N	Dimensions inch/mm													Unit Wt. lb/kg	Open Cap*	Closed Cap*	Backside Shield
inch	mm				A	B	D	G	H	J	L	M	N	P	T	W	Bolt Size				
1 7/16	-	CRBFTRS-PN23T RMW	SK-2556	5782	6 3/16 157.2	4 19/32 116.7	1 17/64 32.1	37/64 14.7	1 25/32 45.2	1 49/64 44.8	2 11/16 68.3	4 5/32 105.6	7/8 22.2	2 9/64 54.4	3 1/2 88.9	29/32 23.0	7/16	3.25 1.47	BEO-24	BEC-24	S-5133GS
1 1/2	-	CRBFTRS-PN24T RMW	SK-2540	25720																	S-5121GS
-	40	CRBFTRS-PN208T RMW	SK-2555	-																	S-5132GS

* Standard option is as shown with Bolt On Cap, SKWEZLOC Locking Collar, Reduced Maintenance Option, with Back Side Shield.

Metric dimensions for reference only.
Not all parts are available from stock. Please contact customer service for availability (800) 626-2120.
For more information on bearing capabilities outside of our standard offering, please contact Application Engineering (800) 626-2093.

SEALMASTER® PN Gold Mounted Ball Bearings

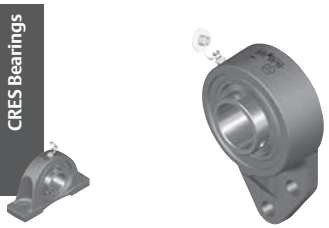

Duty: Standard

Housing: 316 Passivated Stainless Steel Flange Bracket

Self-Alignment: +/- 2 Degrees

Lock: Setscrew

Seal: HPS

Temperature: -20° to 220°F

Grease: Sealmaster GoldPlex-FG

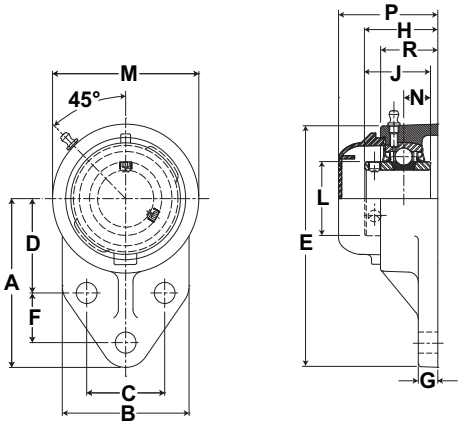

CRFBS-PN Series Flange Bracket Setscrew Locking

Bore Diameter inch	Bore Diameter mm	Part No.	Bearing Insert No.	Basic Dynamic Rating lb/N	A	B	C	D	E	F	G	H	J	L	M	N	P	R	Bolt Size	Unit Wt. lb/kg	Open Cap	Closed Cap
					Dimensions inch/mm																	
3/4	-	CRFBS-PN12	PN-12	2611 11614	3 76.2	2 3/8 60.3	1 1/2 38.1	1 11/16 42.9	4 1/4 108.0	7/8 22.2	5/16 7.9	1 11/32 34.1	1 7/32 31.0	1 3/16 30.2	2 1/2 63.5	1/2 12.7	2 1/4 57.2	1 1/32 26.2	3/8	1.30 .59	ECO-12	ECC-12
-	20	CRFBS-PN204	PN-204																			
1	-	CRFBS-PN16	PN-16	2801 12459	3 3/8 85.7	2 1/2 63.5	1 5/8 41.3	1 13/16 46.0	4 3/4 120.7	1 1/8 28.6	3/8 9.5	1 1/2 38.1	1 3/8 34.9	1 3/8 34.9	2 3/4 69.9	9/16 14.3	2 5/32 54.8	1 9/64 29.0	3/8	2.10 .95	ECO-16	ECC-16
-	25	CRFBS-PN205	PN-205																			
1 3/16	-	CRFBS-PN19	PN-19	4381 19488	3 3/4 95.3	2 3/4 69.9	1 7/8 47.6	2 1/16 52.4	5 3/8 136.5	1 1/4 31.8	3/8 9.5	1 5/8 41.3	1 1/2 38.1	1 19/32 40.5	3 1/4 82.6	5/8 15.9	2 17/32 64.3	1 9/32 32.5	3/8	3.00 1.36	ECO-19	ECC-19
1 1/4	-	CRFBS-PN20R	PN-20R																		ECO-20R	
-	30	CRFBS-PN206	PN-206																		ECO-19	
1 1/4	-	CRFBS-PN20	PN-20	5782 25720	4 1/4 108.0	3 1/4 82.6	2 50.8	2 3/8 60.3	6 1/8 155.6	1 1/4 31.8	1/2 12.7	1 7/8 47.6	1 11/16 42.9	1 55/64 47.2	3 3/4 95.3	11/16 17.5	2 25/32 70.6	1 15/32 37.3	1/2	3.10 1.41	ECO-20	ECC-23
1 3/8	-	CRFBS-PN22	PN-22																		ECO-22	
1 7/16	-	CRFBS-PN23	PN-23																		ECO-23	
-	35	CRFBS-PN207	PN-207																		ECO-22	

Metric dimensions for reference only.
Not all parts are available from stock. Please contact customer service for availability (800) 626-2120.
For more information on bearing capabilities outside of our standard offering, please contact Application Engineering (800) 626-2093.

PN Gold Mounted Ball Bearings

SEALMASTER®

Duty: Standard

Housing: 316 Passivated Stainless Steel Flange Bracket

Self-Alignment: +/- 2 Degrees

Lock: Skwezloc Locking Collar

Seal: HPS

Temperature: -20° to 220°F

Grease: Sealmaster GoldPlex-FG

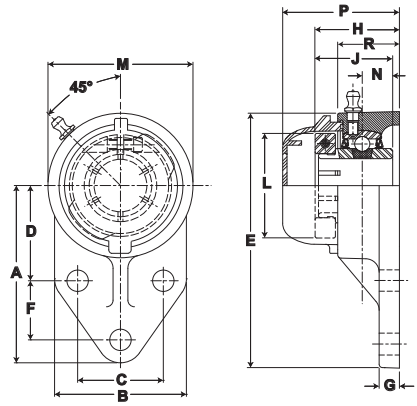

CRFBS-PN-T Series Flange Bracket Skwezloc Locking Collar

Bore Diameter inch	Bore Diameter mm	Part No.	Bearing Insert No.	Basic Dynamic Rating lb/N	Dimensions inch/mm A	B	C	D	H	F	G	E	M	L	R	J	N	P	Bolt Size	Unit Wt. lb/kg	Open Cap	Closed Cap
3/4	-	CRFBS-PN12T	PN-12T	2611 11614	3 76.2	2 3/8 60.3	1 1/2 38.1	1 11/16 42.9	1 11/32 34.1	7/8 22.2	5/16 7.9	4 1/4 108.0	2 1/2 63.5	1 3/4 44.5	1 1/32 26.2	1 7/32 31.0	1/2 12.7	2 1/4 57.2	3/8	1.30 .59	ECO-12	ECC-12
-	20	CRFBS-PN204T	PN-204T																			
1	-	CRFBS-PN16T	PN-16T	2801 12459	3 3/8 85.7	2 1/2 63.5	1 5/8 41.3	1 13/16 46.0	1 1/2 38.1	1 1/8 28.6	3/8 9.5	4 3/4 120.7	2 3/4 69.9	1 15/16 49.2	1 9/64 29.0	1 3/8 34.9	9/16 14.3	2 13/32 61.1	3/8	2.10 .95	ECO-16	ECC-16
-	25	CRFBS-PN205T	PN-205T																			
1 3/16	-	CRFBS-PN19T	PN-19T	4381 19488	3 3/4 95.3	2 3/4 69.9	1 7/8 47.6	2 1/16 52.4	1 5/8 41.3	1 1/4 31.8	3/8 9.5	5 3/8 136.5	3 1/4 82.6	2 3/16 55.6	1 9/32 32.5	1 1/2 38.1	5/8 15.9	2 17/32 64.3	3/8	3.00 1.36	ECO-19	ECC-19
1 1/4	-	CRFBS-PN20RT	PN-20RT																		ECO-20R	
-	30	CRFBS-PN206T	PN-206T																		ECO-19	
1 1/4	-	CRFBS-PN20T	PN-20T	5782 25720	4 1/4 108.0	3 1/4 82.6	2 50.8	2 3/8 60.3	1 7/8 47.6	1 1/4 31.8	1/2 12.7	6 1/8 155.6	3 3/4 95.3	2 7/16 61.9	1 15/32 37.3	1 11/16 42.9	11/16 17.5	2 25/32 70.6	1/2	3.10 1.41	ECO-20	ECC-23
1 3/8	-	CRFBS-PN22T	PN-22T	5782 25720	4 1/4 108.0	3 1/4 82.6	2 50.8	2 3/8 60.3	1 7/8 47.6	1 1/4 31.8	1/2 12.7	6 1/8 155.6	3 3/4 95.3	2 9/16 65.1	1 15/32 37.3	1 11/16 42.9	11/16 17.5	2 25/32 70.6	1/2	3.10 1.41	ECO-22	ECC-23
1 7/16	-	CRFBS-PN23T	PN-23T																		ECO-23	
-	35	CRFBS-PN207T	PN-207T																		ECO-22	

Metric dimensions for reference only.
Not all parts are available from stock. Please contact customer service for availability (800) 626-2120.
For more information on bearing capabilities outside of our standard offering, please contact Application Engineering (800) 626-2093.

SEALMASTER® PN Gold Mounted Ball Bearings

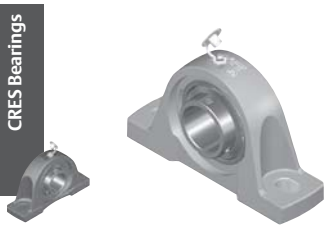

Duty: Standard

Housing: High Strength Composite Pillow Block

Self-Alignment: +/- 2 Degrees

Lock: Setscrew

Seal: HPS

Temperature: 0° to 150°F

Grease: Sealmaster GoldPlex-FG

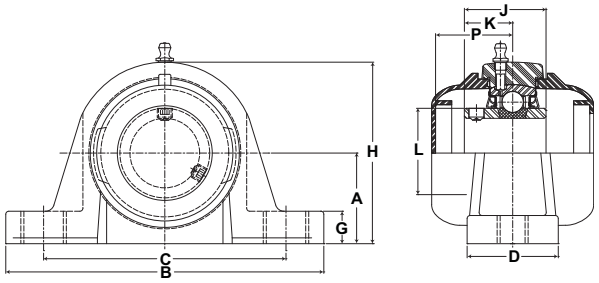

CRPC-PN Series Pillow Block Setscrew Locking

Bore Diameter inch	Bore Diameter mm	Part No.	Bearing Insert No.	Basic Dynamic Rating lb/N	Dimensions inch/mm A	B	C Min.	C Max.	D	G	H	J	K	L	P	Bolt Size	Unit Wt. lb/kg	Open Cap	Closed Cap
3/4	-	CRPC-PN12	PN-12	2611 11614	1 5/16 33.3	5 127.0	3 3/8 85.7	4 1/8 104.8	1 1/2 38.1	9/16 14.3	2 35/64 64.7	1 7/32 31.0	23/32 18.3	1 3/16 30.2	1 41/64 41.7	3/8	.80 .36	ECO-12	ECC-12
-	20	CRPC-PN204	PN-204																
1	-	CRPC-PN16	PN-16	2801 12459	1 7/16 36.5	5 1/2 139.7	3 3/4 95.3	4 1/2 114.3	1 1/2 38.1	9/16 14.3	2 13/16 71.4	1 3/8 34.9	13/16 20.6	1 3/8 34.9	1 47/64 44.1	3/8	.83 .38	ECO-16	ECC-16
-	25	CRPC-PN205	PN-205																
1 3/16	-	CRPC-PN19	PN-19	4381 19488	1 11/16 42.9	6 1/2 165.1	4 7/16 112.7	5 1/16 128.6	1 7/8 47.6	11/16 17.5	3 21/64 84.5	1 1/2 38.1	7/8 22.2	1 19/32 40.5	1 51/64 45.6	1/2	1.35 .61	ECO-19	ECC-19
1 1/4	-	CRPC-PN20R	PN-20R															ECO-20R	
-	30	CRPC-PN206	PN-206															ECO-19	
1 1/4	-	CRPC-PN20	PN-20	5782 25720	1 7/8 47.6	6 9/16 166.7	4 11/16 119.1	5 5/16 134.9	1 7/8 47.6	11/16 17.5	3 3/4 95.3	1 11/16 42.9	1 25.4	1 55/64 47.2	1 59/64 48.8	1/2	2.03 .92	ECO-20	ECC-23
1 3/8	-	CRPC-PN22	PN-22															ECO-23	
1 7/16	-	CRPC-PN23	PN-23																
-	35	CRPC-PN207	PN-207																
1 1/2	-	CRPC-PN24	PN-24	7340 32650	1 15/16 49.2	7 1/4 184.2	5 1/16 128.6	5 11/16 144.5	2 1/8 54.0	11/16 17.5	4 1/64 102.0	1 15/16 49.2	1 3/16 30.2	2 1/16 52.4	2 7/64 53.6	1/2	2.50 1.13	ECO-24	ECC-24
-	40	CRPC-PN208	PN-208																

Metric dimensions for reference only.
Not all parts are available from stock. Please contact customer service for availability (800) 626-2120.
For more information on bearing capabilities outside of our standard offering, please contact Application Engineering (800) 626-2093.

PN Gold Mounted Ball Bearings

SEALMASTER®

Duty: Standard

Housing: High Strength Composite Pillow Block

Self-Alignment: +/- 2 Degrees

Lock: Skwezloc Locking Collar

Seal: HPS

Temperature: 0° to 150°F

Grease: Sealmaster GoldPlex-FG

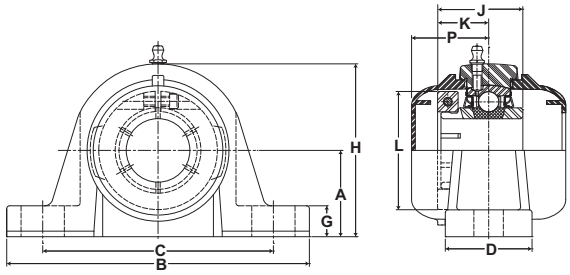

CRPC-PN-T Series Pillow Block Skwezloc Locking Collar

Bore Diameter inch	Bore Diameter mm	Part No.	Bearing Insert No.	Basic Dynamic Rating lb/N	Dimensions inch/mm A	B	C Min.	C Max.	D	G	H	J	K	L	P	Bolt Size	Unit Wt. lb/kg	Open Cap	Closed Cap
3/4	-	CRPC-PN12T	PN-12T	2611 11614	1 5/16 33.3	5 127.0	3 3/8 85.7	4 1/8 104.8	1 1/2 38.1	9/16 14.3	2 35/64 64.7	1 7/32 31.0	23/32 18.3	1 3/4 44.5	1 41/64 41.7	3/8	.80 .36	ECO-12	ECC-12
-	20	CRPC-PN204T	PN-204T																
1	-	CRPC-PN16T	PN-16T	2801 12459	1 7/16 36.5	5 1/2 139.7	3 3/4 95.3	4 1/2 114.3	1 1/2 38.1	9/16 14.3	2 13/16 71.4	1 3/8 34.9	13/16 20.6	1 15/16 49.2	1 47/64 44.1	3/8	.83 .38	ECO-16	ECC-16
-	25	CRPC-PN205T	PN-205T																
1 3/16	-	CRPC-PN19T	PN-19T	4381 19488	1 11/16 42.9	6 1/2 165.1	4 7/16 112.7	5 1/16 128.6	1 7/8 47.6	11/16 17.5	3 21/64 84.5	1 1/2 38.1	7/8 22.2	2 3/16 55.6	1 51/64 45.6	1/2	1.54 .70	ECO-19	ECC-19
1 1/4	-	CRPC-PN20RT	PN-20RT															ECO-20R	
-	30	CRPC-PN206T	PN-206T															ECO-19	
1 1/4	-	CRPC-PN20T	PN-20T	5782 25720	1 7/8 47.6	6 9/16 166.7	4 11/16 119.1	5 5/16 134.9	1 7/8 47.6	11/16 17.5	3 3/4 95.3	1 11/16 42.9	1 25.4	2 7/16 61.9	1 59/64 48.8	1/2	1.97 .89	ECO-20	ECC-23
1 3/8	-	CRPC-PN22T	PN-22T	5782 25720	1 7/8 47.6	6 9/16 166.7	4 11/16 119.1	5 5/16 134.9	1 7/8 47.6	11/16 17.5	3 3/4 95.3	1 11/16 42.9	1 25.4	2 9/16 65.1	1 59/64 48.8	1/2	1.97 .89	ECO-23	ECC-23
1 7/16	-	CRPC-PN23T	PN-23T																
-	35	CRPC-PN207T	PN-207T																
1 1/2	-	CRPC-PN24T	PN-24T	7340 32650	1 15/16 49.2	7 1/4 184.2	5 1/16 128.6	5 11/16 144.5	2 1/8 54.0	11/16 17.5	4 1/64 102.0	1 15/16 49.2	1 3/16 30.2	2 11/16 68.3	2 7/64 53.6	1/2	2.50 1.13	ECO-24	ECC-24
-	40	CRPC-PN208T	PN-208T																

Metric dimensions for reference only.
Not all parts are available from stock. Please contact customer service for availability (800) 626-2120.
For more information on bearing capabilities outside of our standard offering, please contact Application Engineering (800) 626-2093.

SEALMASTER® PN Gold Mounted Ball Bearings

Duty: Standard

Housing: High Strength Composite Tapped Base

Self-Alignment: +/- 2 Degrees

Lock: Setscrew

Seal: HPS

Temperature: 0° to 150°F

Grease: Sealmaster GoldPlex-FG

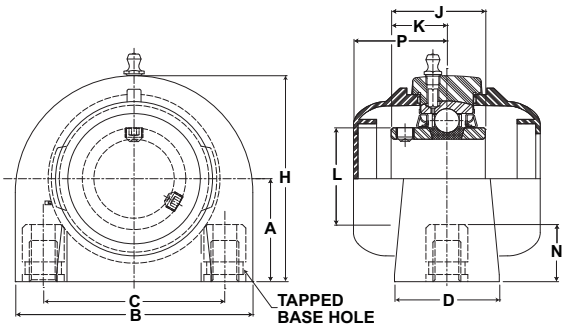

CRTBC-PN Series Tapped Base Pillow Block Setscrew Locking Collar

Bore Diameter inch	Bore Diameter mm	Part No.	Bearing Insert No.	Basic Dynamic Rating lb/N	Dimensions inch/mm A	B	C	D	H	J	K	L	N	P	Bolt Size	Unit Wt. lb/kg	Open Cap	Closed Cap
3/4		CRTBC-PN12	PN-12	2611 11614	1 5/16 33.3	3 1/8 79.4	2 50.8	1 1/2 38.1	2 9/16 65.1	1 7/32 31.0	23/32 18.3	1 3/16 30.2	1/2 12.7	1 41/64 41.7	3/8-16	.82 .37	ECO-12	ECC-12
-	20	CRTBC-PN204	PN-204															
1	-	CRTBC-PN16	PN-16	2801 12459	1 7/16 36.5	3 76.2	2 50.8	1 1/2 38.1	2 13/16 71.4	1 3/8 34.9	13/16 20.6	1 3/8 34.9	1/2 12.7	1 47/64 44.1	3/8-16	.93 .42	ECO-16	ECC-16
-	25	CRTBC-PN205	PN-205															
1 3/16	-	CRTBC-PN19	PN-19	4381 19488	1 11/16 42.9	4 101.6	3 76.2	1 1/2 38.1	3 3/8 85.7	1 1/2 38.1	7/8 22.2	1 19/32 40.5	5/8 15.9	1 51/64 45.6	7/16-14	1.57 .71	ECO-19	ECC-19
1 1/4	-	CRTBC-PN20R	PN-20R														ECO-20R	
-	30	CRTBC-PN206	PN-206														ECO-19	
1 1/4	-	CRTBC-PN20	PN-20	5782 25720	1 7/8 47.6	4 1/4 108.0	3 1/4 82.6	1 7/8 47.6	3 3/4 95.3	1 11/16 42.9	1 25.4	1 55/64 47.2	3/4 19.1	1 59/64 48.8	1/2-13	2.27 1.03	ECO-20	ECC-23
1 3/8	-	CRTBC-PN22	PN-22														ECO-23	
1 7/16	-	CRTBC-PN23	PN-23															
-	35	CRTBC-PN207	PN-207															
1 1/2	-	CRTBC-PN24	PN-24	7340 32650	1 15/16 49.2	4 5/8 117.5	3 1/2 88.9	1 7/8 47.6	3 15/16 100.0	1 15/16 49.2	1 3/16 30.2	2 1/16 52.4	3/4 19.1	2 7/64 53.6	1/2-13	2.77 1.26	ECO-24	ECC-24
-	40	CRTBC-PN208	PN-208															

Metric dimensions for reference only.
Not all parts are available from stock. Please contact customer service for availability (800) 626-2120.
For more information on bearing capabilities outside of our standard offering, please contact Application Engineering (800) 626-2093.

PN Gold Mounted Ball Bearings

SEALMASTER®

Duty: Standard

Housing: High Strength Composite Tapped Base

Self-Alignment: +/- 2 Degrees

Lock: Skwezloc Locking Collar

Seal: HPS

Temperature: 0° to 150°F

Grease: Sealmaster GoldPlex-FG

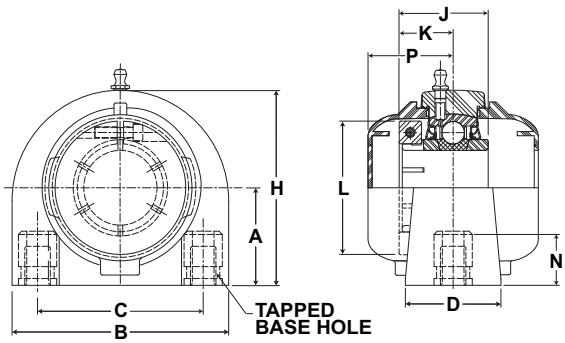

CRTBC-PN-T Series Tapped Base Pillow Block Skwezloc Locking Collar

Bore Diameter inch	Bore Diameter mm	Part No.	Bearing Insert No.	Basic Dynamic Rating lb/N	Dimensions inch/mm A	B	C	D	H	J	K	L	N	P	Bolt Size	Unit Wt. lb/kg	Open Cap	Closed Cap
3/4	-	CRTBC-PN12T	PN-12T	2611 11614	1 5/16 33.3	3 1/8 79.4	2 50.8	1 1/2 38.1	2 9/16 65.1	1 7/32 31.0	23/32 18.3	1 3/4 44.5	1/2 12.7	1 41/64 41.7	3/8-16	.82 .37	ECO-12	ECC-12
-	20	CRTBC-PN204T	PN-204T															
1	-	CRTBC-PN16T	PN-16T	2801 12459	1 7/16 36.5	3 76.2	2 50.8	1 1/2 38.1	2 13/16 71.4	1 3/8 34.9	13/16 20.6	1 15/16 49.2	1/2 12.7	1 47/64 44.1	3/8-16	.93 .42	ECO-16	ECC-16
-	25	CRTBC-PN205T	PN-205T															
1 3/16	-	CRTBC-PN19T	PN-19T	4381 19488	1 11/16 42.9	4 101.6	3 76.2	1 1/2 38.1	3 3/8 85.7	1 1/2 38.1	7/8 22.2	2 3/16 55.6	5/8 15.9	1 51/64 45.6	7/16-14	1.57 .71	ECO-19	ECC-19
1 1/4	-	CRTBC-PN20RT	PN-20RT														ECO-20R	
-	30	CRTBC-PN206T	PN-206T														ECO-19	
1 1/4	-	CRTBC-PN20T	PN-20T	5782 25720	1 7/8 47.6	4 1/4 108.0	3 1/4 82.6	1 7/8 47.6	3 3/4 95.3	1 11/16 42.9	1 25.4	2 7/16 61.9	3/4 19.1	1 59/64 48.8	1/2-13	2.27 1.03	ECO-20	ECC-23
1 3/8	-	CRTBC-PN22T	PN-22T	5782 25720	1 7/8 47.6	4 1/4 108.0	3 1/4 82.6	1 7/8 47.6	3 3/4 95.3	1 11/16 42.9	1 25.4	2 9/16 65.1	3/4 19.1	1 59/64 48.8	1/2-13	2.27 1.03	ECO-23	ECC-23
1 7/16	-	CRTBC-PN23T	PN-23T															
-	35	CRTBC-PN207T	PN-207T															
1 1/2	-	CRTBC-PN24T	PN-24T	7340 32650	1 15/16 49.2	4 5/8 117.5	3 1/2 88.9	1 7/8 47.6	3 15/16 100.0	1 15/16 49.2	1 3/16 30.2	2 11/16 68.3	3/4 19.1	2 7/64 53.6	1/2-13	2.77 1.26	ECO-24	ECC-24
-	40	CRTBC-PN208T	PN-208T															

Metric dimensions for reference only.
Not all parts are available from stock. Please contact customer service for availability (800) 626-2120.
For more information on bearing capabilities outside of our standard offering, please contact Application Engineering (800) 626-2093.

SEALMASTER® PN Gold Mounted Ball Bearings

Duty: Standard

Housing: High Strength Composite Four Bolt Flange

Self-Alignment: +/- 2 Degrees

Lock: Setscrew

Seal: HPS

Temperature: 0° to 150°F

Grease: Sealmaster GoldPlex-FG

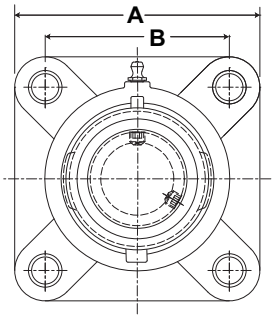

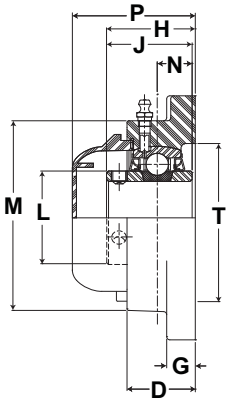

CRFC-PN Series 4 Bolt Flange Setscrew Locking Collar

Bore Diameter inch	Bore Diameter mm	Part No.	Bearing Insert No.	Basic Dynamic Rating lb/N	Dimensions inch/mm A	B	G	D	H	J	L	M	N	P	T	Bolt Size	Unit Wt. lb/kg	Open Cap	Closed Cap	Backside Shield
3/4	-	CRFC-PN12	PN-12	2611 11614	3 7/16 87.3	2 1/2 63.5	7/16 11.1	61/64 24.2	1 9/32 32.5	1 7/32 31.0	1 3/16 30.2	2 3/8 60.3	1/2 12.7	2 13/64 56.0	2 50.8	3/8	.78 .35	ECO-12	ECC-12	4BSS-12
-	20	CRFC-PN204	PN-204																	
1	-	CRFC-PN16	PN-16	2801 12459	3 51/64 96.4	2 3/4 69.9	17/32 13.5	1 5/64 27.4	1 7/16 36.5	1 3/8 34.9	1 3/8 34.9	2 21/32 67.5	9/16 14.3	2 23/64 59.9	2 3/16 55.6	7/16	.99 .45	ECO-16	ECC-16	4BSS-16
-	25	CRFC-PN205	PN-205																	
1 3/16	-	CRFC-PN19	PN-19	4381 19488	4 11/32 110.3	3 1/4 82.6	17/32 13.5	1 13/64 30.6	1 9/16 39.7	1 1/2 38.1	1 19/32 40.5	3 3/16 81.0	5/8 15.9	2 15/32 62.7	2 9/16 65.1	7/16	1.54 .70	ECO-19	ECC-19	4BSS-19
1 1/4	-	CRFC-PN20R	PN-20R															ECO-20R		4BSS-20R
-	30	CRFC-PN206	PN-206															ECO-19		4BSS-19
1 1/4	-	CRFC-PN20	PN-20	5782 25720	4 53/64 122.6	3 5/8 92.1	9/16 14.3	1 11/32 34.1	1 3/4 44.5	1 11/16 42.9	1 55/64 47.2	3 21/32 92.9	11/16 17.5	2 43/64 67.9	2 15/16 74.6	1/2	2.21 1.00	ECO-20	ECC-23	4BSS-20
1 3/8	-	CRFC-PN22	PN-22															ECO-23		4BSS-22
1 7/16	-	CRFC-PN23	PN-23																	4BSS-23
-	35	CRFC-PN207	PN-207																	N/A
1 1/2	-	CRFC-PN24	PN-24	7340 32650	5 1/4 133.4	4 101.6	9/16 14.3	1 1/2 38.1	2 1/64 51.2	1 15/16 49.2	2 1/16 52.4	4 1/64 102.0	3/4 19.1	2 15/16 74.6	3 9/32 83.3	1/2	2.78 1.26	ECO-24	ECC-24	4BSS-24
-	40	CRFC-PN208	PN-208																	N/A

Metric dimensions for reference only.
Not all parts are available from stock. Please contact customer service for availability (800) 626-2120.
For more information on bearing capabilities outside of our standard offering, please contact Application Engineering (800) 626-2093.

PN Gold Mounted Ball Bearings

SEALMASTER®

Duty: Standard

Housing: High Strength Composite Four Bolt Flange

Self-Alignment: +/- 2 Degrees

Lock: Skwezloc Locking Collar

Seal: HPS

Temperature: 0° to 150°F

Grease: Sealmaster GoldPlex-FG

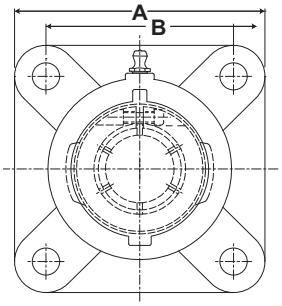

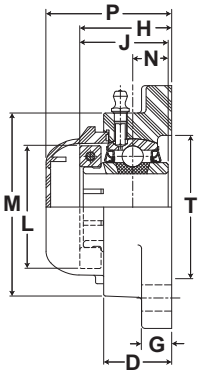

CRFC-PN T Series 4 Bolt Flange Skwezloc Locking Collar

Bore Diameter		Part No.	Bearing Insert No.	Basic Dynamic Rating lb/N	Dimensions inch/mm												Unit Wt. lb/kg	Open Cap	Closed Cap	Backside Shield
inch	mm				A	B	G	D	H	J	L	M	N	P	T	Bolt Size				
3/4	-	CRFC-PN12T	PN-12T	2611 11614	3 7/16 87.3	2 1/2 63.5	7/16 11.1	61/64 24.2	1 9/32 32.5	1 7/32 31.0	1 3/4 44.5	2 3/8 60.3	1/2 12.7	2 13/64 56.0	2 50.8	3/8	.78 .35	ECO-12	ECC-12	4BSS-12
-	20	CRFC-PN204T	PN-204T																	
1	-	CRFC-PN16T	PN-16T	2801 12459	3 51/64 96.4	2 3/4 69.9	17/32 13.5	1 5/64 27.4	1 7/16 36.5	1 3/8 34.9	1 15/16 49.2	2 21/32 67.5	9/16 14.3	2 23/64 59.9	2 3/16 55.6	7/16	.99 .45	ECO-16	ECC-16	4BSS-16
-	25	CRFC-PN205T	PN-205T																	
1 3/16	-	CRFC-PN19T	PN-19T	4381 19488	4 11/32 110.3	3 1/4 82.6	17/32 13.5	1 13/64 30.6	1 9/16 39.7	1 1/2 38.1	2 3/16 55.6	3 3/16 81.0	5/8 15.9	2 15/32 62.7	2 9/16 65.1	7/16	1.54 .70	ECO-19	ECC-19	4BSS-19
1 1/4	-	CRFC-PN20RT	PN-20RT															ECO-20R		4BSS-20R
-	30	CRFC-PN206T	PN-206T															ECO-19		4BSS-19
1 1/4	-	CRFC-PN20T	PN-20T	5782 25720	4 53/64 122.6	3 5/8 92.1	9/16 14.3	1 11/32 34.1	1 3/4 44.5	1 11/16 42.9	2 7/16 61.9	3 21/32 92.9	11/16 17.5	2 43/64 67.9	2 15/16 74.6	1/2	2.21 1.00	ECO-20	ECC-23	4BSS-20
1 3/8	-	CRFC-PN22T	PN-22T	5782 25720	4 53/64 122.6	3 5/8 92.1	9/16 14.3	1 11/32 34.1	1 3/4 44.5	1 11/16 42.9	2 9/16 65.1	3 21/32 92.9	11/16 17.5	2 43/64 67.9	2 15/16 74.6	1/2	2.21 1.00	ECO-23	ECC-23	4BSS-22
1 7/16	-	CRFC-PN23T	PN-23T																	4BSS-23
-	35	CRFC-PN207T	PN-207T																	N/A
1 1/2	-	CRFC-PN24T	PN-24T	5307 23607	5 1/4 133.4	4 101.6	9/16 14.3	1 1/2 38.1	2 1/64 51.2	1 15/16 49.2	2 11/16 68.3	4 1/64 102.0	3/4 19.1	2 15/16 74.6	3 9/32 83.3	1/2	2.78 1.26	ECO-24	ECC-24	4BSS-24
-	40	CRFC-PN208T	PN-208T																	N/A

Metric dimensions for reference only.
Not all parts are available from stock. Please contact customer service for availability (800) 626-2120.
For more information on bearing capabilities outside of our standard offering, please contact Application Engineering (800) 626-2093.

SEALMASTER® PN Gold Mounted Ball Bearings

Duty: Standard

Housing: High Strength Composite Two Bolt Flange

Self-Alignment: +/- 2 Degrees

Lock: Setscrew

Seal: HPS

Temperature: 0° to 150°F

Grease: Sealmaster GoldPlex-FG

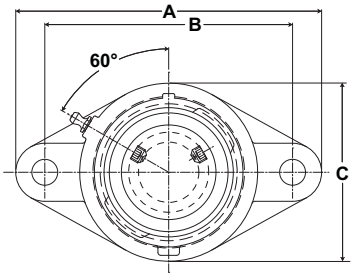

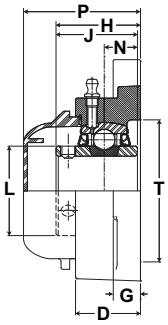

CRFTC-PN Series 2 Bolt Flange Setscrew Locking Collar

Bore Diameter inch	Bore Diameter mm	Part No.	Bearing Insert No.	Basic Dynamic Rating lb/N	Dimensions inch/mm A	B	C	D	G	H	J	L	N	P	T	Bolt Size	Unit Wt. lb/kg	Open Cap	Closed Cap	Backside Shield
3/4	-	CRFTC-PN12	PN-12	2611 11614	4 15/32 113.5	3 17/32 89.7	2 7/16 61.9	31/32 24.6	7/16 11.1	1 9/32 32.5	1 7/32 31.0	1 3/16 30.2	1/2 12.7	2 13/64 56.0	2 50.8	3/8	.70 .32	ECO-12	ECC-12	2BSS-12
-	20	CRFTC-PN204	PN-204																	N/A
1	-	CRFTC-PN16	PN-16	2801 12459	4 15/16 125.4	3 57/64 98.8	2 23/32 69.1	1 5/64 27.4	17/32 13.5	1 7/16 36.5	1 3/8 34.9	1 3/8 34.9	9/16 14.3	2 23/64 59.9	2 3/16 55.6	7/16	.83 .38	ECO-16	ECC-16	2BSS-16
-	25	CRFTC-PN205	PN-205																	N/A
1 3/16	-	CRFTC-PN19	PN-19	4381 19488	5 11/16 144.5	4 19/32 116.7	3 1/4 82.6	1 7/32 31.0	17/32 13.5	1 9/16 39.7	1 1/2 38.1	1 19/32 40.5	5/8 15.9	2 31/64 63.1	2 9/16 65.1	7/16	2.45 1.11	ECO-19	ECC-19	2BSS-19
1 1/4	-	CRFTC-PN20R	PN-20R															ECO-20R		2BSS-20R
-	30	CRFTC-PN206	PN-206															ECO-19		2BSS-19
1 1/4	-	CRFTC-PN20	PN-20	5782 25720	6 21/64 160.7	5 1/8 130.2	3 45/64 94.1	1 11/32 34.1	9/16 14.3	1 3/4 44.5	1 11/16 42.9	1 55/64 47.2	11/16 17.5	2 43/64 67.9	2 15/16 74.6	1/2	3.20 1.45	ECO-20	ECC-23	2BSS-20
1 3/8	-	CRFTC-PN22	PN-22															ECO-23		2BSS-22
1 7/16	-	CRFTC-PN23	PN-23																	2BSS-23
-	35	CRFTC-PN207	PN-207																	2BSS-22
1 1/2	-	CRFTC-PN24	PN-24	7340 32650	6 29/32 175.4	5 21/32 143.7	4 7/64 104.4	1 1/2 38.1	9/16 14.3	2 1/64 51.2	1 15/16 49.2	2 1/16 52.4	3/4 19.1	2 15/16 74.6	3 19/64 83.7	1/2	2.45 1.11	ECO-24	ECC-24	2BSS-24
-	40	CRFTC-PN208	PN-208																	2BSS-208

Metric dimensions for reference only.
Not all parts are available from stock. Please contact customer service for availability (800) 626-2120.
For more information on bearing capabilities outside of our standard offering, please contact Application Engineering (800) 626-2093.

PN Gold Mounted Ball Bearings

SEALMASTER®

Duty: Standard

Housing: High Strength Composite Two Bolt Flange

Self-Alignment: +/- 2 Degrees

Lock: Skwezloc Locking Collar

Seal: HPS

Temperature: 0° to 150°F

Grease: Sealmaster GoldPlex-FG

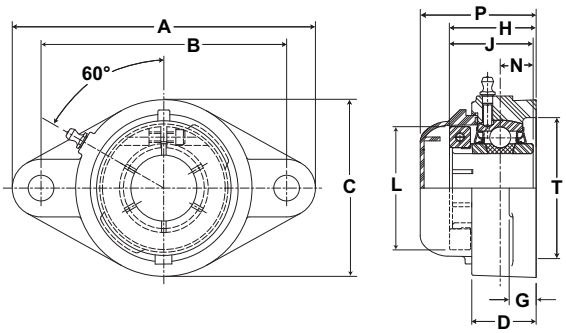

CRFTC-PN-T Series 2 Bolt Flange Skwezloc Locking Collar

Bore Diameter inch	Bore Diameter mm	Part No.	Bearing Insert No.	Basic Dynamic Rating lb/N	Dimensions inch/mm A	B	C	D	G	H	J	L	N	P	T	Bolt Size	Unit Wt. lb/kg	Open Cap	Closed Cap	Backside Shield
3/4	-	CRFTC-PN12T	PN-12T	2611 11614	4 15/32 113.5	3 17/32 89.7	2 7/16 61.9	31/32 24.6	7/16 11.1	1 9/32 32.5	1 7/32 31.0	1 3/4 44.5	1/2 12.7	2 13/64 56.0	2 50.8	3/8	.70 .32	ECO-12	ECC-12	2BSS-12
-	20	CRFTC-PN204T	PN-204T																	
1	-	CRFTC-PN16T	PN-16T	2801 12459	4 15/16 125.4	3 57/64 98.8	2 23/32 69.1	1 5/64 27.4	17/32 13.5	1 7/16 36.5	1 3/8 34.9	1 15/16 49.2	9/16 14.3	2 23/64 59.9	2 3/16 55.6	7/16	.83 .38	ECO-16	ECC-16	2BSS-16
-	25	CRFTC-PN205T	PN-205T																	
1 3/16	-	CRFTC-PN19T	PN-19T	4381 19488	5 11/16 144.5	4 19/32 116.7	3 1/4 82.6	1 7/32 31.0	17/32 13.5	1 9/16 39.7	1 1/2 38.1	2 3/16 55.6	5/8 15.9	2 31/64 63.1	2 9/16 65.1	7/16	1.97 .89	ECO-19	ECC-19	2BSS-19
1 1/4	-	CRFTC-PN20RT	PN-20RT															ECO-20R		2BSS-20R
-	30	CRFTC-PN206T	PN-206T															ECO-19		2BSS-19
1 1/4	-	CRFTC-PN20T	PN-20T	5782 25720	6 21/64 160.7	5 1/8 130.2	3 45/64 94.1	1 11/32 34.1	9/16 14.3	1 3/4 44.5	1 11/16 42.9	2 7/16 61.9	11/16 17.5	2 43/64 67.9	2 15/16 74.6	1/2	1.97 .89	ECO-20	ECC-23	2BSS-20
1 3/8	-	CRFTC-PN22T	PN-22T	5782 25720	6 21/64 160.7	5 1/8 130.2	3 45/64 94.1	1 11/32 34.1	9/16 14.3	1 3/4 44.5	1 11/16 42.9	2 9/16 65.1	11/16 17.5	2 43/64 67.9	2 15/16 74.6	1/2	1.97 .89	ECO-23	ECC-23	2BSS-22
1 7/16	-	CRFTC-PN23T	PN-23T																	2BSS-23
-	35	CRFTC-PN207T	PN-207T																	2BSS-22
1 1/2	-	CRFTC-PN24T	PN-24T	7340 32650	6 29/32 175.4	5 21/32 143.7	4 7/64 104.4	1 1/2 38.1	9/16 14.3	2 1/64 51.2	1 15/16 49.2	2 11/16 68.3	3/4 19.1	2 15/16 74.6	3 19/64 83.7	1/2	2.50 1.13	ECO-24	ECC-24	2BSS-24
-	40	CRFTC-PN208T	PN-208T																	2BSS-208

Metric dimensions for reference only.
Not all parts are available from stock. Please contact customer service for availability (800) 626-2120.
For more information on bearing capabilities outside of our standard offering, please contact Application Engineering (800) 626-2093.

SEALMASTER® PN Gold Mounted Ball Bearings

Duty: Standard

Housing: Fluoropolymer Coated Cast Iron

Self-Alignment: +/- 2 Degrees

Lock: Setscrew

Seal: HPS

Temperature: -20° to 220°F

Grease: Sealmaster GoldPlex-FG

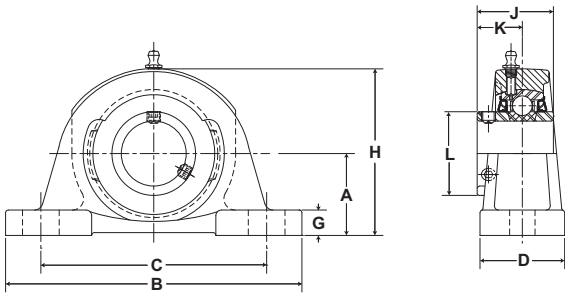

CRPLF-PN Series Low Base Pillow Block Setscrew Locking

Bore Diameter		Part No*	Bearing Insert No.	Basic Dynamic Rating lb/N	Dimensions inch/mm											Unit Wt. lb/kg
					A	B	C		D	G	H	J	K	L	Bolt Size	
inch	mm						Min.	Max.								
1	-	CRPLF-PN16	PN-16	2801 12459	1 5/16 33.3	5 1/2 139.7	3 7/8 98.4	4 3/8 111.1	1 1/2 38.1	1/2 12.7	2 11/16 68.3	1 3/8 34.9	13/16 20.6	1 3/8 34.9	3/8	2.0 .91
-	30	CRPLF-PN205	PN-205													
1 3/16	-	CRPLF-PN19	PN-19	4381 19488	1 9/16 39.7	6 1/2 165.1	4 7/16 112.7	5 1/16 128.6	1 7/8 47.6	7/16 11.1	3 1/4 82.6	1 1/2 38.1	7/8 22.2	1 19/32 40.5	1/2	3.6 1.6
1 1/4	-	CRPLF-PN20R	PN-20R													
-	35	CRPLF-PN206	PN-206													
1 1/4	-	CRPLF-PN20	PN-20	5782 25720	1 13/16 46.0	6 9/16 166.7	4 11/16 119.1	5 5/16 134.9	1 7/8 47.6	9/16 14.3	3 11/16 93.7	1 11/16 42.9	1 25.4	1 55/64 47.2	1/2	4.4 2.0
1 3/8	-	CRPLF-PN22	PN-22													
1 7/16	-	CRPLF-PN23	PN-23													
-	35	CRPLF-PN207	PN-207													
1 1/2	-	CRPS-PN24**	PN-24	7340 32650	1 15/16 49.2	7 1/4 184.2	4 7/8 123.8	5 7/8 149.2	2 1/8 54.0	11/16 17.5	3 15/16 100.0	1 15/16 49.2	1 3/16 30.2	2 1/16 52.4	1/2	5.7 2.6
-	40	CRPLF-PN208	PN-208													
1 11/16	-	CRPLF-PN27	PN-27	7901 35145	2 1/16 52.4	7 1/2 190.5	5 7/16 138.1	6 1/16 154.0	2 1/8 54.0	5/8 15.9	4 3/16 106.4	1 15/16 49.2	1 3/16 30.2	2 19/64 58.3	1/2	6.2 2.8
1 3/4	-	CRPLF-PN28	PN-28													
-	45	CRPLF-PN209	PN-209													
1 15/16	-	CRPLF-PN31	PN-31	7889 35092	2 3/16 55.6	8 1/8 206.4	6 152.4	6 1/2 165.1	2 3/8 60.3	11/16 17.5	4 1/2 114.3	2 1/32 51.6	1 9/32 32.5	2 15/32 62.7	5/8	7.8 3.5
-	50	CRPLF-PN210	PN-210													
2	-	CRPLF-PN32	PN-32	9752 43379	2 7/16 61.9	8 5/8 219.1	6 1/2 165.1	7 177.8	2 3/8 60.3	11/16 17.5	4 15/16 125.4	2 3/16 55.6	1 5/16 33.3	2 23/32 69.1	5/8	9.7 4.4
2 3/16	-	CRPLF-PN35	PN-35													
-	55	CRPLF-PN211	PN-211													

*Housing is Fluoropolymer coated cast iron and housing design does not allow for snap on end cap.
For additional sizes and Skwezloc concentric locking collar availability contact customer service.
**CRPLF-PN24 replaced by CRPS-PN24, dimensions are the same. See page K-35

Metric dimensions for reference only.
Not all parts are available from stock. Please contact customer service for availability (800) 626-2120.
For more information on bearing capabilities outside of our standard offering, please contact Application Engineering (800) 626-2093.

PN Gold Mounted Ball Bearings

SEALMASTER®

Duty: Standard

Housing: Fluoropolymer Coated Cast Iron

Self-Alignment: +/- 2 Degrees

Lock: Setscrew

Seal: HPS

Temperature: -20° to 220°F

Grease: Sealmaster GoldPlex-FG

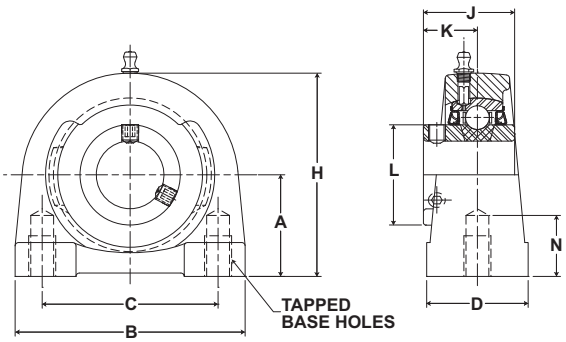

CRTBF-PN Series Tapped Base Pillow Block Setscrew Locking

Bore Diameter inch	Bore Diameter mm	Part No.*	Brg. No.	Basic Dynamic Rating lb/N	Dimensions inch/mm A	B	C	D	H	J	K	L	N Min. Tap Depth	Bolt UNC-2B Thread	Unit Wt. lb/kg
3/4	-	CRTBF-PN12	PN-12	2611	1 5/16	3 1/8	2	1 1/2	2 9/16	1 7/32	23/32	1 3/16	1/2	3/8-16	1.8
0.787	20	CRTBF-PN204	PN-204	11614	33.3	79.4	50.8	38.1	65.1	31.0	18.3	30.2	12.7		.82
1	-	CRTBF-PN16	PN-16	2801	1 7/16	3	2	1 1/2	2 13/16	1 3/8	13/16	1 3/8	1/2	3/8-16	2.0
-	25	CRTBF-PN205	PN-205	12459	36.5	76.2	50.8	38.1	71.4	34.9	20.6	34.9	12.7		.91
1 3/16	-	CRTBF-PN19	PN-19	4381	1 11/16	4	3	1 1/2	3 13/32	1 1/2	7/8	1 19/32	5/8	7/16-14	3.5
1 1/4	-	CRTBF-PN20R	PN-20R	19488	42.9	101.6	76.2	38.1	86.5	38.1	22.2	40.5	15.9		1.59
-	30	CRTBF-PN206	PN-206												
1 1/4	-	CRTBF-PN20	PN-20	5782	1 7/8	4 1/4	3 1/4	1 7/8	3 3/4	1 11/16	1	1 55/64	3/4	1/2-13	4.5
1 3/8	-	CRTBF-PN22	PN-22	25720	47.6	108.0	82.6	47.6	95.3	42.9	25.4	47.2	19.1		2.04
1 7/16	-	CRTBF-PN23	PN-23												
-	35	CRTBF-PN207	PN-207												
1 1/2	-	CRTBF-PN24	PN-24	7340	1 15/16	4 5/8	3 1/2	1 7/8	3 15/16	1 15/16	1 3/16	2 1/16	3/4	1/2-13	6.0
-	40	CRTBF-PN208	PN-208	32650	49.2	117.5	88.9	47.6	100.0	49.2	30.2	52.4	19.1		2.72
1 11/16	-	CRTBF-PN27	PN-27	7901	2 1/8	5	3 3/4	2	4 1/4	1 15/16	1 3/16	2 19/64	3/4	1/2-13	6.5
1 3/4	-	CRTBF-PN28	PN-28	35145	54.0	127.0	95.3	50.8	108.0	49.2	30.2	58.7	19.1		2.95
-	45	CRTBF-PN209	PN-209												
1 15/16	-	CRTBF-PN31	PN-31	9752	2 1/4	5 1/2	4	2	4 5/8	2 1/32	1 9/32	2 15/32	7/8	5/8-11	8.0
2	-	CRTBF-PN32R	PN-32R	43379	57.2	139.7	101.6	50.8	117.5	51.6	32.5	62.7	22.2		3.63
-	50	CRTBF-PN210	PN-210												

*Housing is Fluoropolymer coated cast iron and housing design does not allow for snap on end cap.
For additional sizes and Skwezloc concentric locking collar availability contact customer service.

Metric dimensions for reference only.
Not all parts are available from stock. Please contact customer service for availability (800) 626-2120.
For more information on bearing capabilities outside of our standard offering, please contact Application Engineering (800) 626-2093.

SEALMASTER® PN Gold Mounted Ball Bearings

Duty: Standard

Housing: Fluoropolymer Coated Cast Iron

Self-Alignment: +/- 2 Degrees

Lock: Setscrew

Seal: HPS

Temperature: -20° to 220°F

Grease: Sealmaster GoldPlex-FG

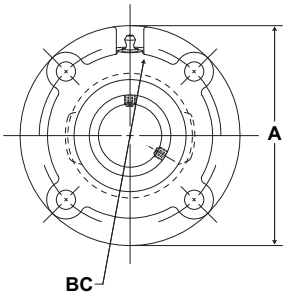

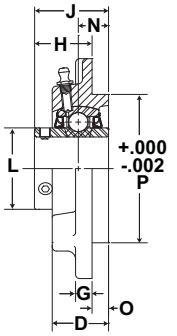

CRFCF-PN Series Flange Cartridge Setscrew Locking

Bore Diameter inch	Bore Diameter mm	Part No.*	Bearing Insert No.	Basic Dynamic Rating lb/N	Dimensions inch/mm A	BC	D	G	H	J	L	N	O	P	Bolt Size	Unit Wt. lb/kg
1 3/16	-	CRFCF-PN19	PN-19	4381 19488	4 3/8 111.1	3 5/8 92.1	1 3/16 30.2	3/8 9.5	1 5/16 33.3	1 9/16 39.7	1 19/32 40.5	5/8 15.9	1/4 6.4	3.000 76.20	5/16	3.0 1.36
1 1/4	-	CRFCF-PN20R	PN-20R													
-	30	CRFCF-PN206	PN-206													
1 1/4	-	CRFCF-PN20	PN-20	5782 25720	5 127.0	4 1/8 104.8	1 9/32 32.5	3/8 9.5	1 5/16 33.3	1 11/16 42.9	1 55/64 47.2	11/16 17.5	3/8 9.5	3.375 85.73	3/8	3.9 1.77
1 3/8	-	CRFCF-PN22	PN-22													
1 7/16	-	CRFCF-PN23	PN-23													
-	35	CRFCF-PN207	PN-207													
1 1/2	-	CRFCF-PN24	PN-24	7340 32650	5 1/4 133.4	4 3/8 111.1	1 27/64 36.1	7/16 11.1	1 1/2 38.1	1 15/16 49.2	2 1/16 52.4	3/4 19.1	7/16 11.1	3.625 92.08	3/8	4.7 2.13
-	40	CRFCF-PN208	PN-208													
1 11/16	-	CRFCF-PN27	PN-27	7901 35145	6 1/8 155.6	5 1/8 130.2	1 29/64 36.9	7/16 11.1	1 1/2 38.1	1 15/16 49.2	2 19/64 58.3	3/4 19.1	7/16 11.1	4.250 107.95	7/16	6.0 2.72
1 3/4	-	CRFCF-PN28	PN-28													
-	45	CRFCF-PN209	PN-209													
1 15/16	-	CRFCF-PN31	PN-31	7889 35092	6 1/8 155.6	5 1/8 130.2	1 27/64 36.1	7/16 11.1	1 9/16 39.7	2 1/32 51.6	2 15/32 62.7	3/4 19.1	15/32 11.9	4.250 107.95	7/16	6.5 2.95
2	-	CRFCF-PN32R	PN-32R													
-	50	CRFCF-PN210	PN-210													
2	-	CRFCF-PN32	PN-32	9752 43379	6 3/8 161.9	5 3/8 136.5	1 5/8 41.3	7/16 11.1	1 9/16 39.7	2 3/16 55.6	2 23/32 69.1	7/8 22.2	5/8 15.9	4.500 114.30	7/16	7.5 3.40
2 3/16	-	CRFCF-PN35	PN-35													
-	55	CRFCF-PN211	PN-211													
2 3/8	-	CRFCF-PN38	PN-38	11789 52440	7 1/8 181.0	6 152.4	1 13/16 46.0	1/2 12.7	1 11/16 42.9	2 9/16 65.1	2 63/64 75.8	1 25.4	7/8 22.2	5.000 127.00	5/8	10.5 4.76
2 7/16	-	CRFCF-PN39	PN-39													
-	60	CRFCF-PN212	PN-212													

*Housing is Fluoropolymer coated cast iron and housing design does not allow for snap on end cap.
For additional sizes and Skwezloc concentric locking collar availability contact customer service

Metric dimensions for reference only.
Not all parts are available from stock. Please contact customer service for availability (800) 626-2120.
For more information on bearing capabilities outside of our standard offering, please contact Application Engineering (800) 626-2093.

PN Gold Mounted Ball Bearings

SEALMASTER®

Duty: Standard

Housing: Fluoropolymer Coated Cast Iron

Self-Alignment: +/- 2 Degrees

Lock: Setscrew

Seal: HPS

Temperature: -20° to 220°F

Grease: Sealmaster GoldPlex-FG

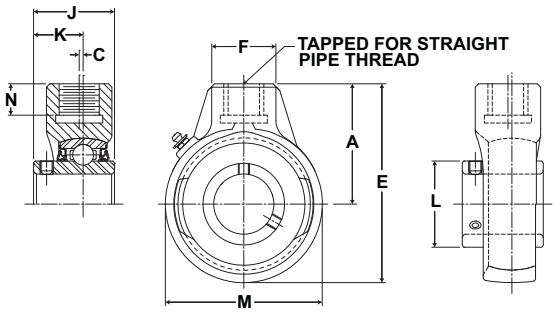

CREHBF-PN Series Hanger Bearing External Lube Setscrew Locking

Bore Diameter inch	Part No.*	Brg. No.	Basic Dynamic Rating lb/N	Dimensions inch/mm A	C	E	F	J	K	L	M	Pipe Tap** N.P.S.M.	N Thread Length	Unit Wt. lb/kg
1	CREHBF-PN16	PNM-16	4381 19488	2 1/2 63.5	-	4 1/16 103.2	1 9/16 39.7	1 1/2 38.1	7/8 22.2	1 19/32 40.5	3 1/8 79.4	3/4-14	13/16 20.6	2.2 1.00
1 1/4	CREHBF-PN20R	PN-20R												
1 1/4	CREHBF-PN20	PN-20	5782 25720	2 3/4 69.9	-	4 9/16 115.9	1 9/16 39.7	1 11/16 42.9	1 25.4	1 55/64 47.2	3 5/8 92.1	3/4-14	3/4 19.1	3.1 1.41
1 3/8	CREHBF-PN22	PN-22												
1 7/16	CREHBF-PN23	PNM-23	7340 32650	2 7/8 73.0	3/32 2.4	4 3/4 120.7	1 9/16 39.7	1 15/16 49.2	1 3/16 30.2	2 1/16 52.4	3 3/4 95.3	3/4-14	3/4 19.1	3.4 1.54
1 1/2	CREHBF-PN24	PN-24												
1 15/16	CREHBF-PN31	PN-31	7889 35092	3 1/4 82.6	3/16 4.8	5 7/16 138.1	1 7/8 47.6	2 1/32 51.6	1 9/32 32.5	2 15/32 62.7	4 3/8 111.1	1-11 1/2	13/16 20.6	4.5 2.04
2	CREHBF-PN32R	PN-32R												
2 3/16	CREHBF-PN35	PNM-35	11789 52440	4 101.6	11/32 8.7	6 13/16 173.0	2 5/16 58.7	2 9/16 65.1	1 9/16 39.7	2 63/64 75.8	5 5/8 142.9	1 1/4-11 1/2	1 1/8 28.6	9 4.08
2 7/16	CREHBF-PN39	PN-39												

*Housing is Fluoropolymer coated cast iron and housing design does not allow for snap on end cap.
**Use Straight Pipe Thread.
For additional sizes and Skwezloc concentric locking collar availability contact customer service

Metric dimensions for reference only.
Not all parts are available from stock. Please contact customer service for availability (800) 626-2120.
For more information on bearing capabilities outside of our standard offering, please contact Application Engineering (800) 626-2093.

SEALMASTER® PN Gold Mounted Ball Bearings

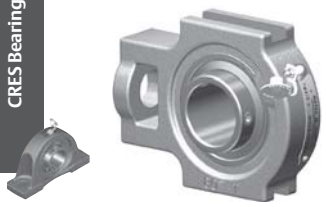

Duty: Standard

Housing: Fluoropolymer Coated Cast Iron

Self-Alignment: +/- 2 Degrees

Lock: Setscrew

Seal: HPS

Temperature: -20° to 220°F

Grease: Sealmaster GoldPlex-FG

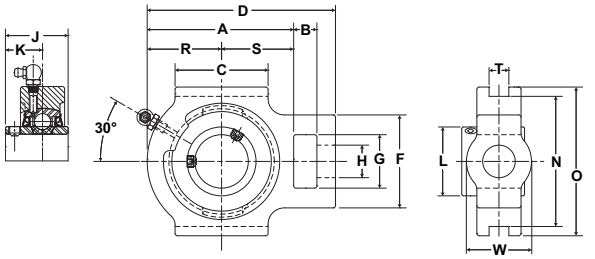

CRSTF-PN Series Wide Slot Take Up Setscrew Locking

Bore Diameter inch	Bore Diameter mm	Part No.*	Brg. No.	Basic Dynamic Rating lb/N	A	B	C	D	F	G	H Core	J	K	L	N	O	R	S	T	W Hub	Unit Wt. lb/kg
					Dimensions inch/mm																
3/4	-	CRSTF-PN12	PN-12	2611	2 11/16	5/8	2	3 11/16	2	1 1/4	3/4	1 7/32	23/32	1 3/16	3	3 1/2	1 5/16	1 3/8	17/32	1 3/8	2.1
-	20	CRSTF-PN204	PN-204	11614	68.3	15.9	50.8	93.7	50.8	31.8	19.1	31.0	18.3	30.2	76.2	88.9	33.3	34.9		34.9	0.95
1	-	CRSTF-PN16	PN-16	2801	2 13/16	5/8	2	3 13/16	2	1 1/4	3/4	1 3/8	13/16	1 3/8	3	3 1/2	1 3/8	1 7/16	17/32	1 1/2	2.6
-	25	CRSTF-PN205	PN-205	12459	71.4	15.9	50.8	96.8	50.8	31.8	19.1	34.9	20.6	34.9	76.2	88.9	34.9	36.5		38.1	1.18
1 3/16	-	CRSTF-PN19	PN-19	4381	3 7/16	5/8	2 1/4	4 7/16	2 3/16	1 7/16	7/8	1 1/2	7/8	1 19/32	3 1/2	4	1 11/16	1 3/4	17/32	1 3/4	3.4
1 1/4	-	CRSTF-PN20R	PN-20R	19488	87.3	15.9	57.2	112.7	55.6	36.5	22.2	38.1	22.2	40.5	88.9	101.6	42.9	44.5		44.5	1.54
-	30	CRSTF-PN206	PN-206																		
1 1/4	-	CRSTF-PN20	PN-20	5782	3 15/16	5/8	2 1/2	5 1/16	2 1/2	1 7/16	7/8	1 11/16	1	1 55/64	3 1/2	4	2	1 15/16	17/32	1 3/4	4.0
1 3/8	-	CRSTF-PN22	PN-22	25720	100.0	15.9	63.5	128.6	63.5	36.5	22.2	42.9	25.4	47.2	88.9	101.6	50.8	49.2		44.5	1.81
1 7/16	-	CRSTF-PN23	PN-23																		
-	35	CRSTF-PN207	PN-207																		
1 1/2	-	CRSTF-PN24	PN-24	7340	4 5/16	3/4	3 1/4	5 11/16	3 1/4	1 15/16	1 1/8	1 15/16	1 3/16	2 1/16	4	4 1/2	2 3/16	2 1/8	11/16	2 1/8	6
-	40	CRSTF-PN208	PN-208	32650	109.5	19.1	82.6	144.5	82.6	49.2	28.6	49.2	30.2	52.4	101.6	114.3	55.6	54.0		54.0	2.7
1 11/16	-	CRSTF-PN27	PN-27	7901	4 5/16	3/4	3 1/4	5 11/16	3 1/4	1 15/16	1 1/8	1 15/16	1 3/16	2 19/64	4	4 5/8	2 1/4	2 1/16	11/16	2 3/16	6.0
1 3/4	-	CRSTF-PN28	PN-28	35145	109.5	19.1	82.6	144.5	82.6	49.2	28.6	49.2	30.2	58.3	101.6	117.5	57.2	52.4		55.6	2.72
-	45	CRSTF-PN209	PN-209																		
1 15/16	-	CRSTF-PN31	PN-31	7889	4 1/2	3/4	3 3/8	5 7/8	3 1/4	1 15/16	1 1/8	2 1/32	1 9/32	2 15/32	4	4 5/8	2 5/16	2 3/16	11/16	2 3/16	6.0
-	50	CRSTF-PN210	PN-210	35092	114.3	19.1	85.7	149.2	82.6	49.2	28.6	51.6	32.5	62.7	101.6	117.5	58.7	55.6		55.6	2.72
2	-	CRSTF-PN32	PN-32	9752	5	1	3 3/4	6 3/4	4	2 1/2	1 3/8	2 3/16	1 5/16	2 23/32	5 1/8	5 3/4	2 9/16	2 7/16	1 1/16	2 1/4	9.8
-	55	CRSTF-PN211	PN-211	43379	127.0	25.4	95.3	171.5	101.6	63.5	34.9	55.6	33.3	69.1	130.2	146.1	65.1	61.9		57.2	4.4
2 7/16	-	CRSTF-PN39	PN-39	11789	5 5/8	1 1/4	4	7 5/8	4	2 1/2	1 3/8	2 9/16	1 9/16	2 63/64	5 1/8	5 3/4	2 15/16	2 11/16	1 1/16	2 3/8	12.3
-	60	CRSTF-PN212	PN-212	52440	142.9	31.8	101.6	193.7	101.6	63.5	34.9	65.1	39.7	75.8	130.2	146.1	74.6	68.3		60.3	5.58

*Housing is Fluoropolymer coated cast iron and housing design does not allow for snap on end cap.
For additional sizes and Skwezloc concentric locking collar availability contact customer service

Metric dimensions for reference only.
Not all parts are available from stock. Please contact customer service for availability (800) 626-2120.
For more information on bearing capabilities outside of our standard offering, please contact Application Engineering (800) 626-2093.

PN Gold Mounted Ball Bearings

SEALMASTER®

Duty: Standard
Lock: Setscrew
Seal: HPS
Temperature: -20° to 220°F

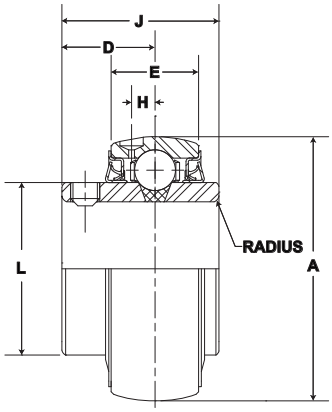

PN Series Insert Setscrew Locking

Bore Diameter inch	Bore Diameter mm	Part No.	Basic Dynamic Rating lb/N	Dimensions inch/mm A	D	E	G	H	J	L	Max Rad. To Clear	Setscrew Tap	Unit Wt. lb/kg
3/4	-	PN-12	2611 11614	1.8504 47	23/32 18.3	5/8 15.9	3/16 4.8	9/64 3.6	1 7/32 31.0	1 3/16 30.2	.040 1.02	1/4-28	.5 .23
-	20	PN-204											
1	-	PN-16	2801 12459	2.0472 52	13/16 20.6	11/16 17.5	7/32 5.6	11/64 4.4	1 3/8 34.9	1 3/8 34.9	.040 1.02	1/4-28	.6 .27
-	25	PN-205											
1 3/16	-	PN-19	4381 19488	2.4409 62	7/8 22.2	7/8 22.2	7/32 5.6	7/32 5.6	1 1/2 38.1	1 19/32 40.5	.040 1.02	1/4-28	1.0 .45
1 1/4	-	PN-20R											
-	30	PN-206											
1 1/4	-	PN-20	5782 25720	2.8346 72	1 25.4	15/16 23.8	1/4 6.4	1/4 6.4	1 11/16 42.9	1 55/64 47.2	.040 1.02	5/16-24	1.5 .68
1 3/8	-	PN-22											
1 7/16	-	PN-23											
-	35	PN-207											
1 1/2	-	PN-24	7340 32650	3.1496 80	1 3/16 30.2	1 3/32 27.8	5/16 7.9	19/64 7.5	1 15/16 49.2	2 1/16 52.4	.062 1.57	5/16-24	1.9 .86
-	40	PN-208											
1 11/16	-	PN-27	7889 35092	3.3465 85	1 3/16 30.2	1 3/32 27.8	5/16 7.9	19/64 7.5	1 15/16 49.2	2 19/64 58.3	.062 1.57	5/16-24	2.2 1.00
1 3/4	-	PN-28											
-	45	PN-209											
1 15/16	-	PN-31	7091 31542	3.5433 90	1 9/32 32.5	1 1/8 28.6	3/8 9.5	17/64 6.7	2 1/32 51.6	2 15/32 62.7	.062 1.57	3/8-24	2.4 1.09
2	-	PN-32R											
-	50	PN-210											
2	-	PN-32	9752 43379	3.937 100	1 5/16 33.3	1 3/16 30.2	3/8 9.5	19/64 7.5	2 3/16 55.6	2 23/32 69.1	.080 2.03	3/8-24	2.8 1.27
2 3/16	-	PN-35											
-	55	PN-211											
2 3/8	-	PN-38	11789 52440	4.3307 110	1 9/16 39.7	1 1/4 31.8	7/16 11.1	21/64 8.3	2 9/16 65.1	2 63/64 75.8	.080 2.03	3/8-24	3.7 1.68
2 7/16	-	PN-39											
-	60	PN-212											

Metric dimensions for reference only.
Not all parts are available from stock. Please contact customer service for availability (800) 626-2120.
For more information on bearing capabilities outside of our standard offering, please contact Application Engineering (800) 626-2093.

SEALMASTER® PN Gold Mounted Ball Bearings

Duty: Standard
Lock: Skwezloc Locking Collar
Seal: HPS
Temperature: -20° to 220°F
Grease: Sealmaster GoldPlex-FG

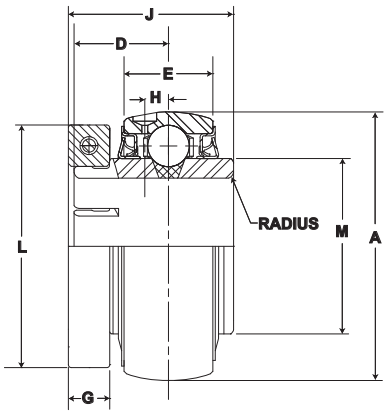

PN-T Series Insert Skwezloc Locking Collar

Bore Diameter inch	Bore Diameter mm	Part No.	Basic Dynamic Rating lb/N	Dimensions inch/mm A	D	E	F	G	H	J	L	Max Rad. To Clear	Torx Cap Screw	Unit Wt. lb/kg	Replacement Collar Part No.
3/4	-	PN-12T	2611	1.8504	23/32	5/8	1 3/16	3/8	9/64	1 9/32	1 3/4	.040	8-32 X 5/8	.60	2-012B XYLAN LOCK COLLAR
-	20	PN-204T	11614	47	18.3	15.9	30.2	9.5	3.6	32.5	44.5	1.02		.27	
1	-	PN-16T	2801	2.0472	13/16	11/16	1 3/8	3/8	11/64	1 7/16	1 15/16	.040	8-32 X 5/8	.80	2-015A XYLAN LOCK COLLAR
-	25	PN-205T	12459	52	20.6	17.5	34.9	9.5	4.4	36.5	49.2	1.02		.36	
1 3/16	-	PN-19T	4381	2.4409	7/8	7/8	1 19/32	3/8	7/32	1 9/16	2 3/16	.040	8-32 X 5/8	1.2	2-13B XYLAN LOCK COLLAR
1 1/4	-	PN-20RT	19488	62	22.2	22.2	40.5	9.5	5.6	39.7	55.6	1.02		.54	
-	30	PN-206T													
1 1/4	-	PN-20T	5782	2.8346	1	15/16	1 55/64	7/16	1/4	1 3/4	2 7/16	.040	10-24 X 3/4	1.8	2-17A XYLAN LOCK COLLAR
			25720	72	25.4	23.8	47.2	11.1	6.4	44.5	61.9	1.02		.82	
1 3/8	-	PN-22T	5782	2.8346	1	15/16	1 55/64	7/16	1/4	1 3/4	2 9/16	.040	10-24 X 3/4	1.8	2-17B XYLAN LOCK COLLAR
1 7/16	-	PN-23T	25720	72	25.4	23.8	47.2	11.1	6.4	44.5	65.1	1.02		.82	
-	35	PN-207T													
1 1/2	-	PN-24T	7340	3.1496	1 3/16	1 3/32	2 1/16	7/16	19/64	2	2 11/16	.062	10-24 X 3/4	2.2	2-19A XYLAN LOCK COLLAR
-	40	PN-208T	32650	80	30.2	27.8	52.4	11.1	7.5	50.8	68.3	1.57		1.00	
1 11/16	-	PN-27T	7901	3.3465	1 3/16	1 3/32	2 19/64	7/16	19/64	2	2 15/16	.062	10-24 X 3/4	2.5	2-111B XYLAN LOCK COLLAR
1 3/4	-	PN-28T	35145	85	30.2	27.8	58.3	11.1	7.5	50.8	74.6	1.57		1.13	
-	45	PN-209T													
1 15/16	-	PN-31T	7889	3.5433	1 9/32	1 1/8	2 15/32	9/16	17/64	2 3/32	3 3/8	.062	1/4-20 X 1	3.0	2-115B XYLAN LOCK COLLAR
2	-	PN-31RT	35092	90	32.5	28.6	62.7	14.3	6.7	53.2	85.7	1.57		1.36	
-	50	PN-210T													
2	-	PN-32T	9752	3.937	1 5/16	1 3/16	2 23/32	9/16	19/64	2 1/4	3 1/2	.080	1/4-20 X 1	3.4	2-23A XYLAN LOCK COLLAR
			43379	100	33.3	30.2	69.1	14.3	7.5	57.2	88.9	2.03		1.54	
2 3/16	-	PN-35T	9752	3.937	1 5/16	1 3/16	2 23/32	9/16	19/64	2 1/4	3 5/8	.080	1/4-20 X 1	3.4	2-23B XYLAN LOCK COLLAR
-	55	PN-211T	43379	100	33.3	30.2	69.1	14.3	7.5	57.2	92.1	2.03		1.54	
2 3/8	-	PN-38T	11789	4.3307	1 9/16	1 1/4	2 63/64	11/16	21/64	2 5/8	4 1/8	.080	5/16 -18 X 1	4.9	2-27B XYLAN LOCK COLLAR
2 7/16	-	PN-39T	52440	110	39.7	31.8	75.8	17.5	8.3	66.7	104.8	2.03		2.22	
-	60	PN-212T													

Metric dimensions for reference only.
Not all parts are available from stock. Please contact customer service for availability (800) 626-2120.
For more information on bearing capabilities outside of our standard offering, please contact Application Engineering (800) 626-2093.

Corrosion Resistant Engineering see page K-75.

For more information on bearing capabilities outside of our standard offering, please contact Application Engineering (800) 626-2093.

Sealmaster ERX-TREME PN Gold Style Ball Bearings

Sealmaster ERX-TREME PN Gold bearings feature high phosphorus, electroless nickel coated steel with patented seal technology and tapered land outer race profile available in either setscrew or SKWEZLOC™ concentric locking collar, with a cylindrical OD and snap ring for easy installation in a housing. The high performance triple lip seal is the latest innovation of over 10 patents on sealing technology. The combination of stainless flingers and FKM lip materials provide a strong contaminant resistance and, GoldPlex-FG (USDA H1) food grade grease loss. Specially engineered for industries with corrosive wash down environments such as food and beverage, pharmaceuticals and chemical processing, the ERX-TREME PN Gold mounted ball bearings provide outstanding performance in demanding corrosive environments.

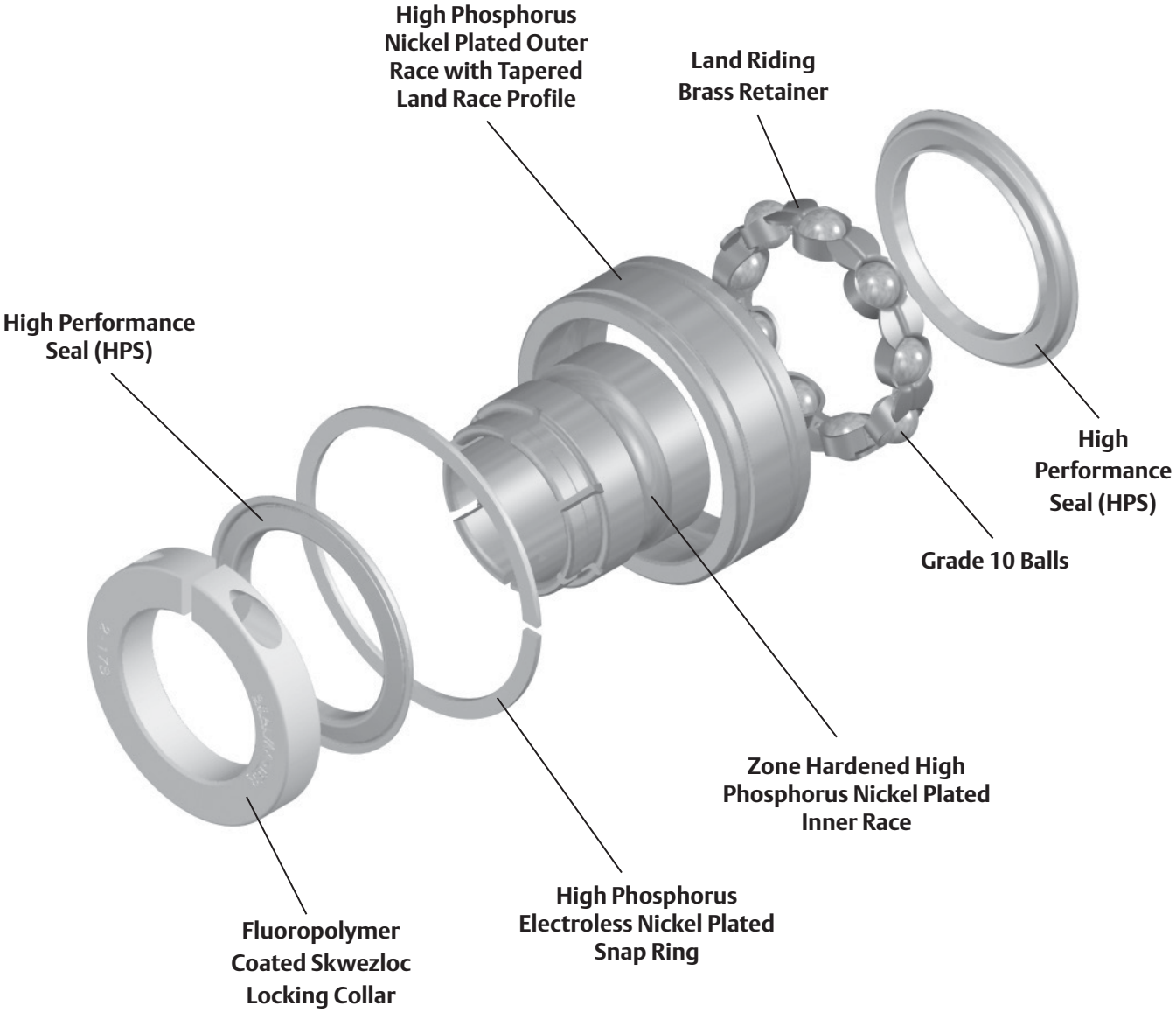

Sealmaster ERX-TREME PN Nomenclature

ERX-TREME Style Bearing

Phosphorous Nickel

Bore Size
Inch - ##/16" (ex. 20/16 = 1 1/4")
R for 1 1/4" and 2" Reduced Only
Metric - Standard Duty - 2##, ## x 5 mm
(ex. 05 = 25 mm)

Optional Suffix
T - SKWEZLOC Locking Collar

ERX - PN16T

*Metric bore units are "soft metric" - setscrew and Skwezloc Locking Collar threads are inch threads.

Features and Benefits

Bearing Races

The inner and outer ring of the Sealmaster ERX-Treme PN Gold bearing are high phosphorous, electroless nickel plated 52100 steel for exceptional corrosion resistance and the outer race profile features the Tapered Lands geometry.

The outer land surface in a conventional bearing is parallel to the axis of the inner ring. The Tapered Lands surface is tapered in a radial direction toward the bearing race. This subtle yet crucial design change ensures that lubricant will be easily redirected back to the raceway. With improved bearing lubricant circulation comes significantly longer bearing service life. This improved circulation and service life comes without any reductions in bearing radial or thrust capacities.

* For bearings that are maintained and relubricated on a regular basis, there is no significant difference in expected service life.

High Performance Seal (HPS)

The triple lip contact seal design provides multi-directional sealing to minimize contamination ingress and retain lubrication – standard on all units. The 304 stainless steel shell and flingers protect from incoming contaminants and provide wear resistant contact surface to all three seal lips. The grease cavities in seal assembly are factory-filled with lubricant prior to shipment for additional contaminant resistance.

For more information on seal performance see page K-32.

Features and Benefits continued

Multiple Locking Methods

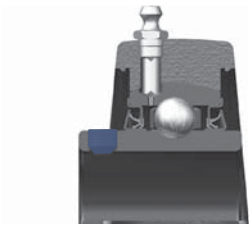

Setscrew Locking

300 series stainless steel 120° spaced, balanced three point contact minimizes inner ring distortion vibration, reduces noise, and improves reliability.

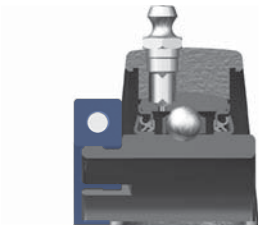

Skwezloc® Concentric Locking Collar

SKWEZLOC is a concentric collar clamp design that results in near-perfect concentricity of the shaft to bearing bore and maintains near perfect ball path roundness, while reducing fretting corrosion. This design eliminates the shaft damage of setscrew locking, and minimizes bearing induced vibration for smoother quieter operation. The collar is fluoropolymer coated with an Endurion* coated TORX head cap screw that outlasts stripping 12 times longer than hex head cap screws.

Specialized Food Grade Lubrication

The Sealmaster PN Gold bearings are factory filled with Sealmaster GoldPlex-FG (Food Grade) grease (USDA H1 approved) which is suitable for mounted bearing lubrication where incidental contact with food products may occur in any application where clean, routine lubrication is required. For more information on Sealmaster GoldPlex-FG see page L-6.

Zone Hardening Inner Race

Sealmaster incorporates a unique heat treat process that hardens the inner race only where it is needed...under the ball path. The high phosphorous electroless nickel plated 52100 steel, zone hardened inner race results improved lock reliability as a result of less distortion at setscrew location and improved thread conformity resulting in improved clamping and resistance to setscrew back-out.

Land Riding Retainer

The Sealmaster unique land riding metal retainer design provides superior pocket clearance that allows for 360° grease circulation around the rolling elements resulting in better retained and utilized lubrication. The land riding design of the retainer minimizes wear on both Ball and retainer, while maximizing stability, which is especially important in applications involving vibration, shock loading or high operating speeds.

* The following trade names, trademarks and/or registered trademarks are used in this material by Regal Power Transmission Solutions are NOT owned or controlled by Regal Power Transmission Solutions and are believed to be owned by the following parties: Endurion ; OMNOVA Solutions Inc. Regal Power Transmission Solutions cannot and does not represent or warrant the accuracy of this information.

SEALMASTER® ERX-TREME Cylindrical OD PN Gold Bearings

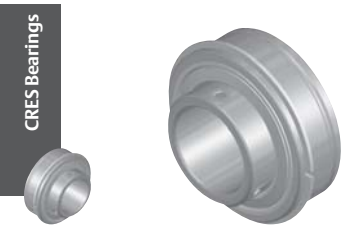

Duty: Standard
Lock: Setscrew
Seal: HPS
Temperature: -20° to 220° F
Grease: Sealmaster GoldPlex-FG
Relube: Relube Through Lube Groove

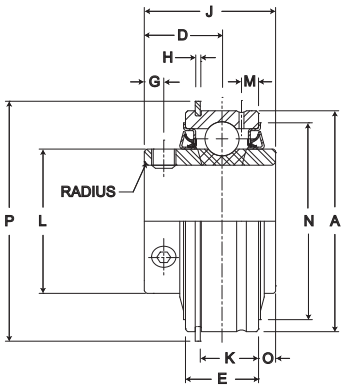

ERX-PN Series Cylindrical O.D. Setscrew Locking

Bore Diameter inch	Bore Diameter mm	Part No.	Basic Dynamic Rating lb/N	A	D	E	G	H	J	K	L	M	N	O	P	T	Max. Rad To Clear	Unit Wt. lb/kg
1/2	-	ERX-PN8	2611	1.8504	13/16	5/8	3/16	3/64	1 7/32	31/64	1 3/16	11/64	1 5/8	.094	2 1/16	11/64	.040	.56
5/8	-	ERX-PN10	11614	47	20.6	15.9	4.8	1.2	31.0	12.3	30.2	4.4	41.3	2.39	52.4	4.4	1.02	.25
3/4	-	ERX-PN12																
-	20	ERX-PN204																
1	-	ERX-PN16	2801	2.0472	55/64	3/4	7/32	3/64	1 3/8	39/64	1 3/8	13/64	1 55/64	.135	2 17/64	13/64	.040	.68
-	25	ERX-PN205	12459	52	21.8	19.1	5.6	1.2	34.9	15.5	34.9	5.2	47.2	3.43	57.5	5.2	1.02	.31
1 1/8	-	ERX-PN18	4381	2.4409	7/8	7/8	7/32	1/16	1 1/2	11/16	1 19/32	7/32	2 5/32	.188	2 21/32	7/32	.040	.93
1 3/16	-	ERX-PN19	19488	62	22.2	22.2	5.6	1.6	38.1	17.5	40.5	5.6	54.8	4.75	67.5	5.6	1.02	0.42
1 1/4	-	ERX-PN20R																
-	30	ERX-PN206																
1 1/4	-	ERX-PN20	5782	2.8364	1	15/16	1/4	1/16	1 11/16	3/4	1 55/64	7/32	2 17/32	.219	3 5/64	7/32	.040	1.37
1 3/8	-	ERX-PN22	25720	72	25.4	23.8	6.4	1.6	42.9	19.1	47.2	5.6	64.3	5.56	78.2	5.6	1.02	.62
1 7/16	-	ERX-PN23																
-	35	ERX-PN207																
1 1/2	-	ERX-PN24	7340	3.1496	1 3/16	1 3/32	5/16	1/16	1 15/16	29/32	2 1/16	1/4	2 53/64	.188	3 13/32	1/4	.062	2
-	40	ERX-PN208	32650	80	30.2	27.8	7.9	1.6	49.2	23.0	52.4	6.4	71.8	4.76	86.5	6.4	1.57	.91
1 11/16	-	ERX-PN27	7901	3.3465	1 3/16	1 3/32	5/16	1/16	1 15/16	29/32	2 19/64	1/4	3 1/16	.188	3 19/32	1/4	.062	2.31
1 3/4	-	ERX-PN28	35145	85	30.2	27.8	7.9	1.6	49.2	23.0	58.3	6.4	77.8	4.76	91.3	6.4	1.57	1.05
-	45	ERX-PN209																
1 15/16	-	ERX-PN31	7889	3.5433	1 9/32	1 1/8	3/8	3/32	2 1/32	29/32	2 15/32	19/64	3 7/32	.188	3 25/32	19/64	.062	2.43
2	-	ERX-PN32R	35092	90	32.5	28.6	9.5	2.4	51.6	23.0	62.7	7.5	81.8	4.76	96.0	7.5	1.57	1.10
-	50	ERX-PN210																
2	-	ERX-PN32	9752	3.9370	1 5/16	1 3/16	3/8	3/32	2 3/16	31/32	2 23/32	19/64	3 9/16	.281	4 3/16	19/64	.080	3
2 3/16	-	ERX-PN35	43379	100	33.3	30.2	9.5	2.4	55.6	24.6	69.1	7.5	90.5	7.14	106.4	7.5	2.03	1.36
2 7/16	-	ERX-PN39	7889 35092	4.3307 110	1 9/16 39.7	1 1/4 31.8	7/16 11.1	3/32 2.4	2 9/16 65.1	1 1/32 26.2	2 63/64 75.8	19/64 7.5	3 29/32 99.2	.375 9.53	4 37/64 116.3	19/64 7.5	.080 2.03	4 1.81
2 1/2	-	ERX-PN40	13971 62146	4.9213 125	1 11/16 42.9	1 3/8 34.9	7/16 11.1	7/64 2.8	2 3/4 69.9	1 7/64 28.2	3 7/16 87.3	5/16 7.9	4 7/16 112.7	.375 9.53	5 9/32 134.1	5/16 7.9	.080 2.03	5.56 2.52

Metric dimensions for reference only.
Not all parts are available from stock. Please contact customer service for availability (800) 626-2120.
For more information on bearing capabilities outside of our standard offering, please contact Application Engineering (800) 626-2093.

ERX-TREME
Cylindrical OD PN Gold Bearings

SEALMASTER®

Duty: Standard
Lock: Skwezloc Locking Collar
Seal: HPS
Temperature: -20° to 220° F
Grease: Sealmaster GoldPlex-FG
Relube: Relube Through Lube Groove

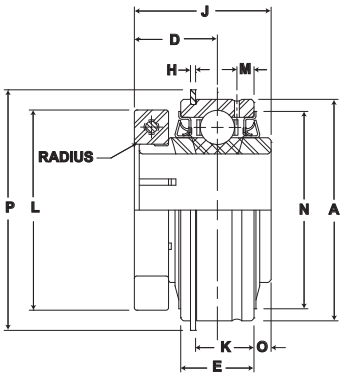

ERX-PN-T Series Cylindrical O.D. Skwezloc Locking Collar

Bore Diameter inch	Bore Diameter mm	Part No.	Basic Dynamic Rating lb/N	Dimensions in Inches A	D	E	H	J	K	L	M	N	O	P	T	Max. Rad To Clear	Unit Wt. lb/kg
3/4	-	ERX-PN12T	2611	1.8504	7/8	5/8	3/64	1 9/32	31/64	1 3/4	11/64	1 5/8	.094	2 1/16	1/8	.040	.56
-	20	ERX-PN204T	11614	47	22.2	15.9	1.2	32.5	12.3	44.5	4.4	41.3	2.39	52.4	3.2	1.02	.25
1	-	ERX-PN16T	2801	2.0472	59/64	3/4	3/64	1 7/16	39/64	1 15/16	13/64	1 7/32	.135	2 17/64	13/64	.040	.68
-	25	ERX-PN205T	12459	52	23.4	19.1	1.2	36.5	15.5	49.2	5.2	46.8	3.43	57.5	5.2	1.02	.31
1 1/8	-	ERX-PN18T															
1 3/16	-	ERX-PN19T	4381	2.4409	15/16	7/8	1/16	1 9/16	11/16	2 3/16	7/32	2 5/32	.188	2 21/32	7/32	.040	.93
1 1/4	-	ERX-PN20RT	19488	62	23.8	22.2	1.6	39.7	17.5	55.6	5.6	54.8	4.76	67.5	5.6	1.02	.42
-	30	ERX-PN206T															
1 1/4	-	ERX-PN20T															
1 3/8	-	ERX-PN22T	5782	2.8346	1 1/16	15/16	1/16	1 3/4	3/4	2 7/16	7/32	2 17/32	.219	3 5/64	7/32	.040	1.37
-	35	ERX-PN207T	25720	72	27.0	23.8	1.6	44.5	19.1	61.9	5.6	64.3	5.56	78.2	5.6	1.02	.62
1 7/16	-	ERX-PN23T	5782 25720	2.8346 72	1 1/16 27.0	15/16 23.8	1/16 1.6	1 3/4 44.5	3/4 19.1	2 7/16 61.9	7/32 5.6	2 17/32 64.3	.219 5.56	3 5/64 78.2	7/32 5.6	.040 1.02	1.37 .62
1 1/2	-	ERX-PN24T	7340	3.1496	1 1/4	1 3/32	1/16	2	29/32	2 11/16	1/4	2 53/64	.188	3 13/32	1/4	.062	2.00
-	40	ERX-PN208T	32650	80	31.8	27.8	1.6	50.8	23.0	68.3	6.4	71.8	4.76	86.5	6.4	1.57	.91
1 11/16	-	ERX-PN27T															
1 3/4	-	ERX-PN28T	7901	3.3465	1 1/4	1 3/32	1/16	2	29/32	2 15/16	1/4	3 1/32	.188	3 19/32	1/4	.062	2.31
-	45	ERX-PN209T	35145	85	31.8	27.8	1.6	50.8	23.0	74.6	6.4	77.0	4.76	91.3	6.4	1.57	1.05
1 15/16	-	ERX-PN31T	7889	3.5433	1 11/32	1 1/8	3/32	2 3/32	29/32	3 3/8	19/64	3 7/32	.188	3 25/32	19/64	.062	2.43
-	50	ERX-PN210T	35092	90	34.1	28.6	2.4	53.2	23.0	85.7	7.5	81.8	4.76	96.0	7.5	1.57	1.10
2	-	ERX-PN32T	9752 43379	3.9370 100	1 3/8 34.9	1 3/16 30.2	3/32 2.4	2 1/4 57.2	31/32 24.6	3 1/2 88.9	19/64 7.5	3 9/16 90.5	.281 4.78	4 3/16 106.4	19/64 7.5	.080 2.03	3.00 1.36
2 3/16	-	ERX-PN35T	9752 43379	3.9370 100	1 3/8 34.9	1 3/16 30.2	3/32 2.4	2 1/4 57.2	31/32 24.6	3 5/8 92.1	2 23/32 69.1	3 9/16 90.5	.281 7.14	4 3/16 106.4	19/64 7.5	.080 2.03	3.00 1.36
2 7/16	-	ERX-PN39T	13971 62146	4.3307 110	1 5/8 41.3	1 1/4 31.8	3/32 2.4	2 5/8 66.7	1 1/32 26.2	4 1/8 104.8	19/64 7.5	3 29/32 99.2	.375 9.35	4 37/64 116.3	19/64 7.5	.080 2.03	4.00 1.81

Metric dimensions for reference only.
Not all parts are available from stock. Please contact customer service for availability (800) 626-2120.
For more information on bearing capabilities outside of our standard offering, please contact Application Engineering (800) 626-2093.

Sealmaster CR Gold Mounted Ball Bearings

Sealmaster CR Gold mounted bearings feature a black oxide treated setscrew locking single row ball bearing utilizing 316 passivated stainless steel housing. The bearing features a Sealmaster nitrile rubber single lip contact seal with stainless steel flinger to help prevent contaminates from entering and help contain the factory fill of Sealmaster Goldplex-FG™ food grade grease. Depending on your preference, these bearings are available in pillow block, two bolt flange, four bolt flange, and three bolt flange bracket configurations as illustrated on the pages to follow.

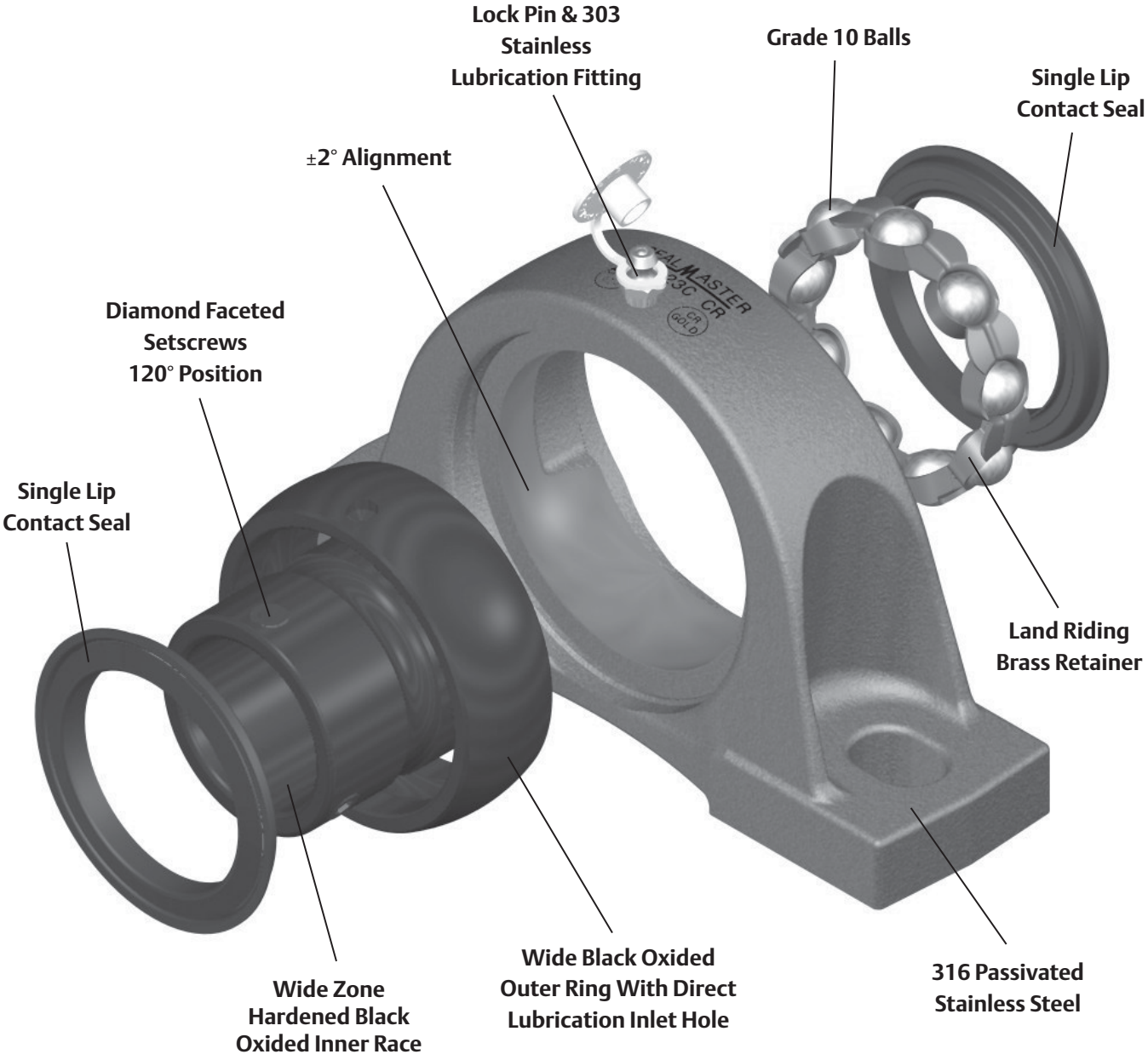

Sealmaster CR Gold Nomenclature

Housing Type
- NP - Pillow Block
- SFT - 2 Bolt Flange
- SF - 4 Bolt Flange
- FB - Flange Bracket

Bore Size
- Inch - ##/16" (ex. 20/16 = 1 1/4")
  - R for 1 1/4" and 2" Reduced Only
- Metric - Standard Duty - 2##, ## x 5 mm
  - (ex. 05 = 25 mm)

Contact Seal

Corrosion Resistant Housing

NP - 16C CR

Features and Benefits

Stainless Steel Housing

High quality solid base designed investment cast passivated 316 stainless steel casting providing the highest amount corrosion resistance currently available for stainless steel housings. The investment cast process yields a smooth, easy to clean surface. The solid construction with machined base was designed for minimal gaps with no fillings.

Wide Outer Race

Sealmaster has the industry's widest outer race. The black oxided outer race is 20 to 30% wider than industry standard outer races. This feature provides increased grease capacity, improved sealing options, and more insert stability.

Lock Pin and Dimple

The Sealmaster exclusive locking pin and dimple system provides direct lubricant into the bearing cavity & ball path instead of around a lubrication groove, prevents outer ring rotation (sometimes referred to as "creep"), and allows ±2° static misalignment of the bearing insert

Single Lip Contact Seal

Single Lip Contact Seal consists of a nitrile rubber washer in metal shroud to shield the lip from large contaminants. The seal is designed to balance drag and protection in wet and dry environments.

Features and Benefits continued

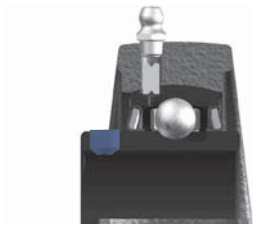

Setscrew Locking

120° spaced, balanced three point contact minimizes inner ring distortion vibration, reduces noise, and improves reliability. Precision manufactured diamond faceted setscrews contribute to improved clamping and resistance to back out.

Zone Hardening Inner Race

Sealmaster incorporates a unique heat treat process that hardens the inner race only where it is needed...under the ball path. The black oxided zone hardened inner race results improved lock reliability as a result of less distortion at setscrew location and improved thread conformity resulting in improved clamping and resistance to setscrew back-out

Land Riding Retainer

The Sealmaster unique land riding metal retainer design provides superior pocket clearance allows for 360° oil circulation around the rolling elements resulting in better retained and utilized lubrication.

Specialized Food Grade Lubrication

The Sealmaster PN Gold bearings are factory filled with Sealmaster GoldPlex-FG (Food Grade) grease (USDA H1 approved) which is suitable for mounted bearing lubrication where incidental contact with food products may occur in any application where clean, routine lubrication is required. For more information on Sealmaster GoldPlex-FG see page L-6.

Product Identification

Specialized laser identification for permanent brand and nomenclature identification.

SEALMASTER® CR Gold Mounted Ball Bearings

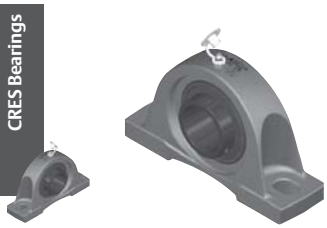

Duty: Standard

Rolling Elements: 52100 Steel Balls

Housing: 316 Passivated Stainless Steel Pillow Block

Self-Alignment: +/- 2 Degrees

Lock: Setscrew

Seal: Single Lip Rubber Contact Seal

Temperature: -20° to 220° F

Grease: Sealmaster GoldPlex-HP

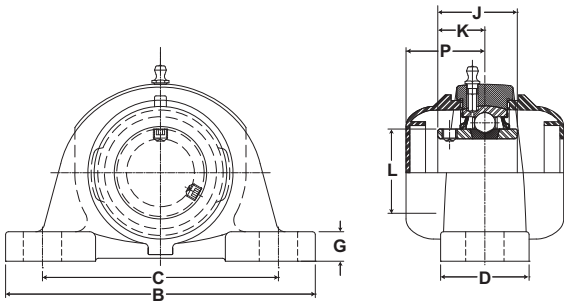

NP-C CR Series Pillow Block Setscrew Locking

Bore Diameter inch	Bore Diameter mm	Part No.	Bearing Insert No.	Basic Dynamic Rating lb/N	Dimensions inch/mm A	B	C Min.	C Max.	D	G	H	J	K	L	P	Bolt Size	Unit Wt. lb/kg	Open Cap	Closed Cap
3/4	-	NP-12C CR	2-012C	2611	1 5/16	5	3 3/8	4 1/8	1 1/2	1/2	2 9/16	1 7/32	47/64	1 3/16	1 41/64	3/8	1.80	ECO-12	ECC-12
-	20	NP-204C CR	5204C	11614	33.3	127.0	85.7	104.8	38.1	12.7	65.1	31.0	18.7	30.2	41.7		.82		
1	-	NP-16C CR	2-1C	2801	1 7/16	5 1/2	3 3/4	4 1/2	1 1/2	1/2	2 13/16	1 3/8	13/16	1 3/8	1 47/64	3/8	2.10	ECO-16	ECC-16
-	25	NP-205C CR	5205C	12459	36.5	139.7	95.3	114.3	38.1	12.7	71.4	34.9	20.6	34.9	44.1		.95		
1 3/16	-	NP-19C CR	2-13C															ECO-19	
1 1/4	-	NP-20RC CR	1-14C	4381	1 11/16	6 1/2	4 7/16	5 1/16	1 7/8	9/16	3 3/8	1 1/2	7/8	1 19/32	1 51/64	1/2	3.65	ECO-20R	ECC-19
-	30	NP-206C CR	5206C	19488	42.9	165.1	112.7	128.6	47.6	14.3	85.7	38.1	22.2	40.5	45.6		1.66	ECO-19	
1 1/4	-	NP-20C CR	2-14C															ECO-20	
1 7/16	-	NP-23C CR	2-17C	5782	1 7/8	6 9/16	4 11/16	5 5/16	1 7/8	5/8	3 3/4	1 11/16	1	1 55/64	1 59/64	1/2	4.45	ECO-23	ECC-23
-	35	NP-207C CR	5207C	25720	47.6	166.7	119.1	134.9	47.6	15.9	95.3	42.9	25.4	47.2	48.8		2.02	ECO-23	
1 1/2	-	NP-24C CR	2-18C	7240	1 15/16	7 1/4	4 7/8	5 7/8	2 1/8	11/16	3 15/16	1 15/16	1 3/16	2 1/16	2 7/64	1/2	5.75	ECO-24	ECC-24
-	40	NP-208C CR	5208C	32205	49.2	184.2	123.8	149.2	54.0	17.5	100.0	49.2	30.2	52.4	53.6		2.61		
1 11/16	-	NP-27C CR	2-111	7901	2 1/8	7 1/2	5 7/16	6 1/16	2 1/8	11/16	4 1/4	1 15/16	1 3/16	2 19/64	2 1/8	1/2	6.65	ECO-27	ECC-27
-	45	NP-209C CR	5209C	35145	54.0	190.5	138.1	154.0	54.0	17.5	108.0	49.2	30.2	58.3	54.0		3.02		
1 15/16	-	NP-31C CR	2-115C	7889	2 1/4	8 1/8	6	6 1/2	2 3/8	3/4	4 9/16	2 1/32	1 9/32	2 15/32	2 13/64	5/8	8.10	ECO-31	ECC-31
-	50	NP-210C CR	5210C	35092	57.2	206.4	152.4	165.1	60.3	19.1	115.9	51.6	32.5	62.7	56.0		3.67		
2	-	NP-32C CR	1-2C															ECO-32	
2 3/16	-	NP-35C CR	2-23C	9752	2 1/2	8 5/8	6 1/2	7	2 3/8	3/4	5	2 3/16	1 5/16	2 23/32	2 21/64	5/8	9.70	ECO-35	ECC-35
-	55	NP-211C CR	5211C	43379	63.5	219.1	165.1	177.8	60.3	19.1	127.0	55.6	33.3	69.1	59.1		4.40		
2 7/16	-	NP-39C CR	2-27C	11789	2 3/4	9 1/2	6 7/8	7 5/8	2 3/4	7/8	5 9/16	2 9/16	1 9/16	2 63/64	2 37/64	5/8	13.70	ECO-39	ECC-39
-	60	NP-212C CR	5212C	52440	69.9	241.3	174.6	193.7	69.9	22.2	141.3	65.1	39.7	75.8	65.5		6.21		

Skwezloc concentric locking available upon request

Metric dimensions for reference only.
Not all parts are available from stock. Please contact customer service for availability (800) 626-2120.
For more information on bearing capabilities outside of our standard offering, please contact Application Engineering (800) 626-2093.

CR Gold Mounted Ball Bearings

SEALMASTER®

Duty: Standard

Rolling Elements: 52100 Steel Balls

Housing: 316 Passivated Stainless Steel Four Bolt Flange

Self-Alignment: +/- 2 Degrees

Lock: Setscrew

Seal: Single Lip Rubber Contact Seal

Temperature: -20° to 220° F

Grease: Sealmaster GoldPlex-HP

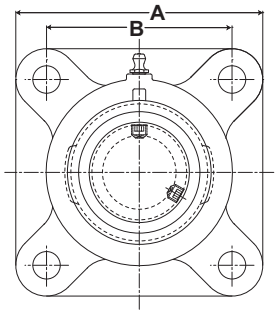

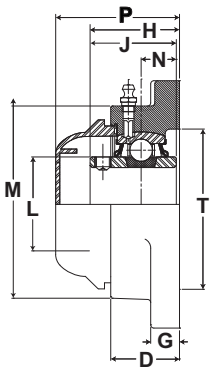

SF-C CR Series 4 Bolt Flange Setscrew Locking

Bore Diameter inch	Bore Diameter mm	Part No.	Bearing Insert No.	Basic Dynamic Rating lb/N	Dimensions inch/mm A	B	D	G	H	J	L	M	N	P	T	Bolt Size	Unit Wt. lb/kg	Open Cap	Closed Cap	Backside Shield
3/4	-	SF-12C CR	2-012C	2611 11614	3 3/8 85.7	2 1/2 63.5	31/32 24.6	7/16 11.1	1 9/32 32.5	1 7/32 31.0	1 3/16 30.2	2 1/2 63.5	1/2 12.7	2 19/64 58.3	2 50.8	3/8	1.50 .68	ECO-12	ECC-12	4BSS-12
-	20	SF-204C CR	5204C																	
1	-	SF-16C CR	2-1C	2801 12459	3 3/4 95.3	2 3/4 69.9	1 5/64 27.4	17/32 13.5	1 7/16 36.5	1 3/8 34.9	1 3/8 34.9	2 23/32 69.1	9/16 14.3	2 7/16 61.9	2 3/8 60.3	7/16	2.00 .91	ECO-16	ECC-16	4BSS-16
-	25	SF-205C CR	5205C																	
1 3/16	-	SF-19C CR	2-13C	4381 19488	4 1/4 108.0	3 1/4 82.6	1 7/32 31.0	17/32 13.5	1 9/16 39.7	1 1/2 38.1	1 19/32 40.5	3 7/32 81.8	5/8 15.9	2 37/64 65.5	2 7/8 73.0	7/16	2.75 1.25	ECO-19	ECC-19	4BSS-19
1 1/4	-	SF-20RC CR	1-14C															ECO-20R		4BSS-20R
-	30	SF-206C CR	5206C															ECO-19		4BSS-19
1 1/4	-	SF-20C CR	2-14C	5782 25720	4 5/8 117.5	3 5/8 92.1	1 11/32 34.1	9/16 14.3	1 3/4 44.5	1 11/16 42.9	1 55/64 47.2	3 3/4 95.3	11/16 17.5	2 3/4 69.9	3 5/16 84.1	1/2	3.90 1.77	ECO-20	ECC-23	4BSS-20
1 7/16	-	SF-23C CR	2-17C															ECO-23		4BSS-23
-	35	SF-207C CR	5207C																	N/A
1 1/2	-	SF-24C CR	2-18C	7340 32650	5 1/8 130.2	4 101.6	1 1/2 38.1	9/16 14.3	2 1/64 51.2	1 15/16 49.2	2 1/16 52.4	4 5/64 103.6	3/4 19.1	3 1/64 76.6	3 1/2 88.9	1/2	5.15 2.34	ECO-24	ECC-24	4BSS-24
-	40	SF-208C CR	5208C																	N/A
1 11/16	-	SF-27C CR	2-111	7901 35145	5 3/8 136.5	4 1/8 104.8	1 9/16 39.7	9/16 14.3	2 3/64 52.0	1 15/16 49.2	2 19/64 58.3	4 21/64 109.9	3/4 19.1	3 3/64 77.4	3 7/8 98.4	9/16	5.70 2.59	ECO-27	ECC-27	4BSS-27
-	45	SF-209C CR	5209C																	N/A
1 15/16	-	SF-31C CR	2-115C	7889 35092	5 5/8 142.9	4 3/8 111.1	1 9/16 39.7	9/16 14.3	2 5/32 54.8	2 1/32 51.6	2 15/32 62.7	3 5/64 115.5	3/4 19.1	3 3/64 77.4	4 101.6	9/16	6.40 2.90	ECO-31	ECC-31	4BSS-31
-	50	SF-210C CR	5210C																	N/A
2	-	SF-32C CR	1-2C	9752 43379	6 3/8 161.9	5 1/8 130.2	1 3/4 44.5	13/16 20.6	2 5/16 58.7	2 3/16 55.6	2 23/32 69.1	5 3/16 131.8	7/8 22.2	3 13/32 86.4	4 1/4 108.0	5/8	10.45 4.74	ECO-35	ECC-35	4BSS-32
2 3/16	-	SF-35C CR	2-23C																	4BSS-35
-	55	SF-211C CR	5211C																	
2 7/16	-	SF-39C CR	2-27C	11789 52440	6 7/8 174.6	5 5/8 142.9	1 15/16 49.2	13/16 20.6	2 11/16 68.3	2 9/16 65.1	2 63/64 75.8	5 7/16 138.1	1 25.4	3 51/64 96.4	5 127.0	5/8	11.80 5.35	ECO-39	ECC-39	4BSS-39
-	60	SF-212C CR	5212C																	4BSS-38

Skwezloc concentric locking available upon request

Metric dimensions for reference only.
Not all parts are available from stock. Please contact customer service for availability (800) 626-2120.
For more information on bearing capabilities outside of our standard offering, please contact Application Engineering (800) 626-2093.

SEALMASTER® CR Gold Mounted Ball Bearings

Duty: Standard

Rolling Elements: 52100 Steel Balls

Housing: 316 Passivated Stainless Steel Two Bolt Flange

Self-Alignment: +/- 2 Degrees

Lock: Setscrew

Seal: Single Lip Rubber Contact Seal

Temperature: -20° to 220° F

Grease: Sealmaster GoldPlex-HP

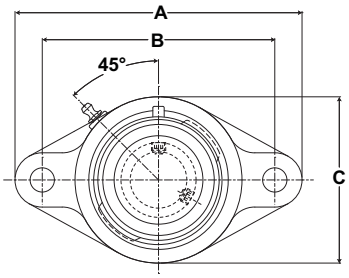

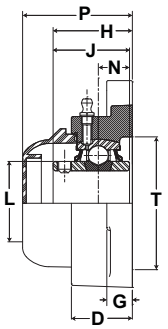

SFT-C CR Series 2 Bolt Flange Setscrew Locking

Bore Diameter inch	Bore Diameter mm	Part No.	Bearing Insert No.	Basic Dynamic Rating lb/N	Dimensions inch/mm A	B	C	D	G	H	J	L	N	P	T	Bolt Size	Unit Wt. lb/kg	Open Cap	Closed Cap	Backside Shield
3/4	-	SFT-12C CR	2-012C	2611	4 13/32	3 17/32	2 3/8	31/32	7/16	1 9/32	1 7/32	1 3/16	1/2	2 19/64	2	3/8	1.10	ECO-12	ECC-12	2BSS-12
-	20	SFT-204C CR	5204C	11614	111.9	89.7	60.3	24.6	11.1	32.5	31.0	30.2	12.7	58.3	50.8		.50			
1	-	SFT-16C CR	2-1C	2801	4 7/8	3 57/64	2 3/4	1 5/64	17/32	1 7/16	1 3/8	1 3/8	9/16	2 7/16	2 3/8	7/16	1.50	ECO-16	ECC-16	2BSS-16
-	25	SFT-205C CR	5205C	12459	123.8	98.8	69.9	27.4	13.5	36.5	34.9	34.9	14.3	61.9	60.3		.68			
1 3/16	-	SFT-19C CR	2-13C															ECO-19		2BSS-19
1 1/4	-	SFT-20RC CR	1-14C	4381	5 9/16	4 19/32	3 1/4	17/32	17/32	1 9/16	1 1/2	1 19/32	5/8	2 9/16	2 7/8	7/16	2.20		ECC-19	2BSS-20R
-	30	SFT-206C CR	5206C	19488	141.3	116.7	82.6	31.0	13.5	39.7	38.1	40.5	15.9	65.1	73.0		1.00	ECO-20R		2BSS-19
1 1/4	-	SFT-20C CR	2-14C															ECO-20		2BSS-20
1 7/16	-	SFT-23C CR	2-17C	5782	6 1/8	5 1/8	3 3/4	1 11/32	9/16	1 3/4	1 11/16	1 55/64	11/16	2 3/4	3 5/16	1/2	3.25		ECC-23	2BSS-23
-	35	SFT-207C CR	5207C	25720	155.6	130.2	95.3	34.1	14.3	44.5	42.9	47.2	17.5	69.9	84.1		1.47	ECO-23		2BSS-22
1 1/2	-	SFT-24C CR	2-18C	7340	6 3/4	5 21/32	4 1/8	1 1/2	9/16	2 1/64	1 15/16	2 1/16	3/4	3 1/64	3 1/2	1/2	4.35	ECO-24	ECC-24	2BSS-24
-	40	SFT-208C CR	5208C	32650	171.5	143.7	104.8	38.1	14.3	51.2	49.2	52.4	19.1	76.6	88.9		1.97			2BSS-208
1 11/16	-	SFT-27C CR	2-111	7901	7 1/16	5 27/32	4 3/8	1 9/16	9/16	2 3/64	1 15/16	2 19/64	3/4	3 3/64	3 7/8	9/16	5.00	ECO-27	ECC-27	2BSS-27
-	45	SFT-209C CR	5209C	35145	179.4	148.4	111.1	39.7	14.3	52.0	49.2	58.3	19.1	77.4	98.4		2.27			N/A
1 15/16	-	SFT-31C CR	2-115C	7889	7 7/16	6 3/16	4 9/16	1 9/16	9/16	2 5/32	2 1/32	2 15/32	3/4	3 1/16	4	9/16	5.15	ECO-31	ECC-31	2BSS-31
-	50	SFT-210C CR	5210C	35092	188.9	157.2	115.9	39.7	14.3	54.8	51.6	62.7	19.1	77.8	101.6		2.34			N/A
2	-	SFT-32C CR	1-2C																	2BSS-32
2 3/16	-	SFT-32C CR	2-23C	9752	8 1/2	7 1/4	5 1/4	1 3/4	13/16	2 5/16	2 3/16	2 23/32	7/8	3 13/32	4 1/4	5/8	8.40	ECO-35	ECC-35	2BSS-35
-	55	SFT-32C CR	5211C	43379	215.9	184.2	133.4	44.5	20.6	58.7	55.6	69.1	22.2	86.4	108.0		3.81			

Skwezloc concentric locking available upon request

Metric dimensions for reference only.
Not all parts are available from stock. Please contact customer service for availability (800) 626-2120.
For more information on bearing capabilities outside of our standard offering, please contact Application Engineering (800) 626-2093.

CR Gold Mounted Ball Bearings

SEALMASTER®

Duty: Standard

Rolling Elements: 52100 Steel Balls

Housing: 316 Passivated Stainless Steel Flange Block

Self-Alignment: +/- 2 Degrees

Lock: Setscrew

Seal: Single Lip Rubber Contact Seal

Temperature: -20° to 220° F

Grease: Sealmaster GoldPlex-HP

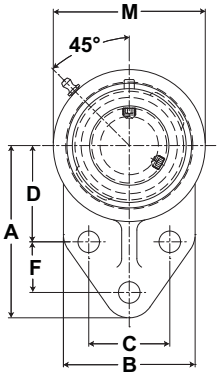

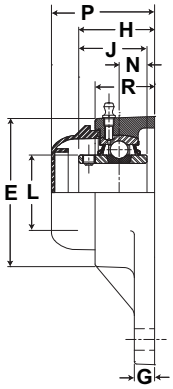

FB-C CR Series Flange Bracket Setscrew Locking

Bore Diameter inch	Bore Diameter mm	Part No.	Bearing Insert No.	Basic Dynamic Rating lb/N	Dimensions inch/mm A	B	C	D	E	F	G	H	J	L	M	N	P	R	Bolt Size	Unit Wt. lb/kg	Open Cap	Closed Cap
3/4	-	FB-12C CR	2-012C	2611	3	2 3/8	1 1/2	1 11/16	4 1/4	7/8	5/16	1 11/32	1 7/32	1 3/16	2 1/2	1/2	2 1/4	1	3/8	1.30	ECO-12	ECC-12
-	20	FB-204C CR	5204C	11614	76.2	60.3	38.1	42.9	108	22.2	7.9	34.1	31.0	30.2	63.5	12.7	57.2	25.4		.59		
1	-	FB-16C CR	2-1C	2801	3 3/8	2 1/2	1 5/8	1 13/16	4 3/4	1 1/8	3/8	1 1/2	1 3/8	1 3/8	2 3/4	9/16	25/32	1 3/32	3/8	1.80	ECO-16	ECC-16
-	25	FB-205C CR	5205C	12459	85.7	63.5	41.3	46.0	120.7	28.6	9.5	38.1	34.9	34.9	69.9	14.3	54.8	27.8		.82		
1 3/16	-	FB-19C CR	2-13C	4381	3 3/4	2 3/4	1 7/8	2 1/16	5 3/8	1 1/4	3/8	1 5/8	1 1/2	1 19/32	3 1/4	5/8	2 17/32	1 15/64	3/8	2.45	ECO-19	ECC-19
1 1/4	-	FB-20RC CR	1-14C	19488	95.3	69.9	47.6	52.4	136.5	31.8	9.5	41.3	38.1	40.5	82.6	15.9	64.3	31.4		1.11	ECO-20R	
-	30	FB-206C CR	5206C																		ECO-19	
1 1/4	-	FB-20C CR	2-14C	5782	4 1/4	3 1/4	2	2 3/8	6 1/8	1 1/4	1/2	1 7/8	1 11/16	1 55/64	3 3/4	11/16	2 25/32	1 15/32	1/2	3.80	ECO-20	ECC-23
1 7/16	-	FB-23C CR	2-17C	25720	108.0	82.6	50.8	60.3	155.6	31.8	12.7	47.6	42.9	47.2	95.3	17.5	70.6	37.3		1.72	ECO-23	
-	35	FB-207C CR	5207C																			

Skwezloc concentric locking available upon request

Metric dimensions for reference only.
Not all parts are available from stock. Please contact customer service for availability (800) 626-2120.
For more information on bearing capabilities outside of our standard offering, please contact Application Engineering (800) 626-2093.

Table of Contents

Fluoropolymer Coating

Used On:

- RPB-CR Units
- PN Gold Units with Fluoropolymer Cast Iron. As listed on pages K-53 to K-57.

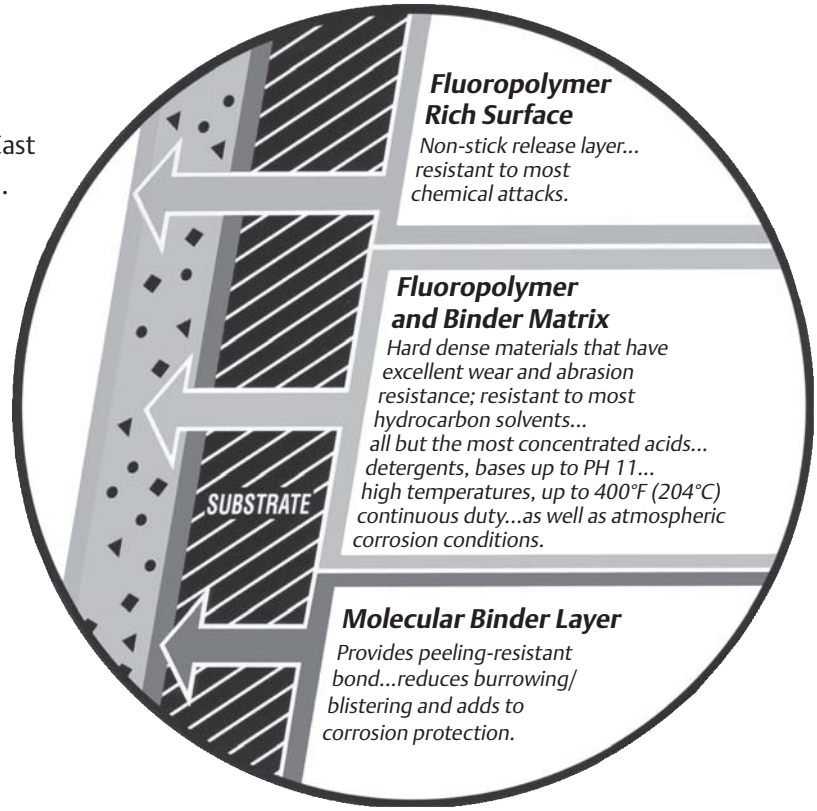

The chart below demonstrates the effectiveness of this corrosion-resistant polymer coating for a variety of atmospheric conditions and other physical qualities, against other popular materials. It is also important to note that **SEALMASTER RPB-CR Duty Bearings** have the housing bores coated

HOUSING COATING PERFORMANCE CHART

CORROSION CHARACTERISTICS	SEALMASTER CORROSION DUTY	PAINT	ELECTRO-LESS NICKEL	CU/NI/CR	NYLON	TEFLON*
ACID	✔✔✔✔	✔	✔✔✔	✔✔	✔✔✔	✔✔✔✔
BASE	✔✔✔✔	✔	✔✔	✔✔	✔✔✔	✔✔✔✔
WASHDOWN	✔✔✔✔	✔	✔✔	✔✔	✔✔✔	✔**
ATMOSPHERIC EXPOSURE	✔✔✔✔	✔✔	✔✔	✔✔	✔✔	✔✔✔✔
NON-STICK	✔✔✔✔	-	-	-	✔	✔✔✔✔
ADHESION TO CASTING	✔✔✔✔	✔✔✔	✔✔✔	✔✔✔	✔✔✔	✔
HARDNESS	✔✔✔	✔✔	✔✔✔✔	✔✔✔✔	✔✔✔	✔
COLOR	✔✔✔✔	✔	✔✔	✔✔✔✔	✔✔	✔✔

EXCELLENT ✔✔✔✔ FAIR ✔✔ UNACCEPTABLE -
GOOD ✔✔✔ POOR ✔

**SHOULD NOT BE USED WITH HIGH PRESSURE SPRAYWASH

* Teflon is a registered trademark of the Du Pont Company.

Load Ratings for Sealmaster PN Gold & CR Gold

This chart displays load capacity in pounds for a given L10 life, speed and shaft size. The shaded areas indicate the maximum speed ratings for CR Gold only. The values in the table represent loads at ideal conditions with press fit mounting to the shaft. ABMA recommends applying life adjustments factors for slip fit mounted ball bearings and when using alternative race materials. To obtain de-rated load, divide load in the table by 1.29. The values in the table represent equivalent radial loads only. For combined radial and thrust load, the equivalent radial load must be calculated before applying the load in the table. Refer to Mounted Ball Engineering Section G for more information on calculating L10.

Bore Size	Basic Dynamic Rating lb/N	L10 Hrs	RPM													
			50	150	250	500	750	1000	1250	1500	1750	2000	3000	4000	5000	6000
1/2 5/8 3/4	2611 11614	5000	653	653	619	491	429	390	362	341	324	310	270	246	228	215
		10000	653	583	491	390	341	310	287	270	257	246	215	195	181	170
		30000	583	404	341	270	236	215	199	188	178	170	149	135	126	118
		50000	491	341	287	228	199	181	168	158	150	144	126	114	106	100
		100000	390	270	228	181	158	144	133	126	119	114	100	91	84	79
1	2801 12459	5000	700	700	664	527	461	418	388	366	347	332	290	264	245	230
		10000	700	625	527	418	366	332	308	290	276	264	230	209	194	183
		30000	625	433	366	290	253	230	214	201	191	183	160	145	135	127
		50000	527	366	308	245	214	194	180	170	161	154	135	122	114	107
		100000	418	290	245	194	170	154	143	135	128	122	107	97	90	85
1 3/16 1 1/4R	4381 19487	5000	1095	1095	1039	825	720	654	608	572	543	519	454	412	383	
		10000	1095	978	825	654	572	519	482	454	431	412	360	327	304	
		30000	978	678	572	454	396	360	334	315	299	286	250	227	211	
		50000	825	572	482	383	334	304	282	265	252	241	211	191	178	
		100000	654	454	383	304	265	241	224	211	200	191	167	152	141	
1 1/4 1 3/8 1 7/16	5782 25718	5000	1446	1446	1371	1088	951	864	802	755	717	686	599	544		
		10000	1446	1290	1088	864	755	686	636	599	569	544	475	432		
		30000	1290	895	755	599	523	475	441	415	394	377	330	299		
		50000	1088	755	636	505	441	401	372	350	333	318	278	253		
		100000	864	599	505	401	350	318	295	278	264	253	221	200		
1 1/2	7340 32648	5000	1835	1835	1741	1381	1207	1096	1018	958	910	870	760	691		
		10000	1835	1638	1381	1096	958	870	808	760	722	691	603	548		
		30000	1638	1136	958	760	664	603	560	527	501	479	418	380		
		50000	1381	958	808	641	560	509	472	445	422	404	353	321		
		100000	1096	760	641	509	445	404	375	353	335	321	280	254		
1 5/8 1 11/16 1 3/4	7901 35144	5000	1975	1975	1874	1487	1299	1180	1096	1031	979	937	818			
		10000	1975	1763	1487	1180	1031	937	870	818	777	744	650			
		30000	1763	1222	1031	818	715	650	603	567	539	516	450			
		50000	1487	1031	870	690	603	548	509	479	455	435	380			
		100000	1180	818	690	548	479	435	404	380	361	345	301			
1 15/16 2R	7889 35090	5000	1972	1972	1871	1485	1297	1178	1094	1029	978	935	817			
		10000	1972	1760	1485	1178	1029	935	868	817	776	742	649			
		30000	1760	1221	1029	817	714	649	602	567	538	515	450			
		50000	1485	1029	868	689	602	547	508	478	454	434	379			
		10000	1178	817	689	547	478	434	403	379	360	345	301			
2 2 3/16	9752 43377	5000	2438	2438	2312	1835	1603	1457	1352	1273	1209	1156	1010			
		10000	2438	2176	1835	1457	1273	1156	1073	1010	959	918	802			
		30000	2176	1509	1273	1010	882	802	744	700	665	636	556			
		50000	1835	1273	1073	852	744	676	628	591	561	537	469			
		100000	1457	1010	852	676	591	537	498	469	445	426	372			
2 1/4 2 7/16	11789 52437	5000	2947	2947	2795	2219	1938	1761	1635	1538	1461	1398				
		10000	2947	2631	2219	1761	1538	1398	1298	1221	1160	1109				
		30000	2631	1824	1538	1221	1067	969	900	847	804	769				
		50000	2219	1538	1298	1030	900	817	759	714	678	649				
		100000	1761	1221	1030	817	714	649	602	567	538	515				

Notes:
- Not all shaft sizes are available for each product line; refer to the product pages to determine availability.
- Typical operating temperature range of CR Gold and PN Gold bearings are -20° F to 220° F (0° F to 150° F for composite housings).
- For loads, speeds and temperature not listed, contact Application Engineering at 800-626-2093.

Load Ratings for Sealmaster RPB-CR

This chart displays load capacity in pounds for a given L10 life, speed and shaft size. The values in the table represent equivalent radial loads only. For combined radial and thrust load, the equivalent radial load must be calculated before applying the load in the table. Refer to Mounted Roller Engineering Section I for more information on calculating L10, and page I-56 for Single Row Basic Dynamic Rating.

Bore Size	Basic Dynamic Rating lb/N	L10 Hrs.	RPM													
			50	150	250	500	750	1000	1250	1500	1750	2000	2500	3000	3500	4000
1 3/16 1 1/4	2975 13233	5000	2975	2975	2975	2552	2260	2073	1939	1836	1753	1684	1575	1491	1424	1368
		10000	2975	2975	2552	2073	1836	1684	1575	1491	1424	1368	1279	1211	1156	1111
		30000	2975	2140	1836	1491	1320	1211	1133	1072	1024	984	920	871	832	799
		50000	2552	1836	1575	1279	1133	1039	972	920	878	844	789	747	714	685
		100000	2073	1491	1279	1039	920	844	789	747	714	685	641	607	580	557
1 3/8 1 7/16	4760 21174	5000	4760	4760	4760	4084	3616	3317	3102	2937	2804	2694	2520	2386	2278	
		10000	4760	4760	4084	3317	2937	2694	2520	2386	2278	2188	2047	1938	1850	
		30000	4760	3424	2937	2386	2112	1938	1812	1716	1638	1574	1472	1394	1331	
		50000	4084	2937	2520	2047	1812	1662	1555	1472	1406	1350	1263	1196	1142	
		100000	3317	2386	2047	1662	1472	1350	1263	1196	1142	1097	1026	971	927	
1 1/2 1 5/8 1 11/16	6140 27312	5000	6140	6140	6140	5268	4664	4279	4002	3789	3617	3475	3250	3077		
		10000	6140	6140	5268	4279	3789	3475	3250	3077	2938	2823	2640	2500		
		30000	6140	4416	3789	3077	2725	2500	2338	2213	2113	2030	1899	1798		
		50000	5268	3789	3250	2640	2338	2144	2006	1899	1813	1742	1629	1542		
		100000	4279	3077	2640	2144	1899	1742	1629	1542	1473	1415	1323	1253		
1 3/4 1 15/16 2	8070 35897	5000	8070	8070	8070	6923	6130	5624	5259	4979	4754	4568	4272			
		10000	8070	8070	6923	5624	4979	4568	4272	4045	3862	3710	3470			
		30000	8070	5804	4979	4045	3581	3285	3072	2909	2777	3668	2496			
		50000	6923	4979	4272	3470	3072	2818	2636	2496	2383	2289	2141			
		100000	5624	4045	3470	2818	2496	2289	2141	2027	1935	1859	1739			
2 3/16	8570 38121	5000	8570	8570	8570	7352	6510	5972	5585	5288	5049	4851	4537			
		10000	8570	8570	7352	5972	5288	4851	4537	4295	4101	3940	3685			
		30000	8570	6164	5288	4295	3803	3489	3263	3089	2950	2834	2650			
		50000	7352	5288	4537	3685	3263	2993	2799	2650	2530	2431	2274			
		100000	5972	4295	3685	2993	2650	2431	2274	2153	2055	1975	1847			
2 1/4 2 7/16 2 1/2	9030 40167	5000	9030	9030	9030	7747	6860	6293	5885	5572	5320	5111				
		10000	9030	9030	7747	6293	5572	5111	4780	4526	4321	4152				
		30000	9030	6495	5572	4526	4007	3676	3438	3255	3108	2986				
		50000	7747	5572	4780	3883	3438	3154	2950	2793	2666	2562				
		100000	6293	4526	3883	3154	2793	2562	2396	2268	2166	2081				
2 11/16 2 3/4 2 15/16 3	9630 42836	5000	9630	9630	9630	8262	7316	6711	6276	5942	5674					
		10000	9630	9630	8262	6711	5942	5451	5098	4826	4608					
		30000	9630	6926	5942	4826	4274	3920	3666	3471	3314					
		50000	8262	5942	5098	4141	3666	3363	3145	2978	2843					
		100000	6711	4826	4141	3363	2978	2732	2555	2419	2310					
3 3/16 3 7/16 3 1/2	15320 68147	5000	15320	15320	15320	13143	11638	10676	9984	9453						
		10000	15320	15320	13143	10676	9453	8671	8110	7678						
		30000	15320	11018	9453	7678	6799	6237	5833	5522						
		50000	13143	9453	8110	6587	5833	5351	5004	4738						
		100000	10676	7678	6587	5351	4738	4346	4065	3848						
3 15/16 4	20980 93324	5000	20980	20980	20980	17999	15938	14620	13673							
		10000	20980	20980	17999	14620	12945	11875	11106							
		30000	20980	15089	12945	10515	9311	8541	7988							
		50000	17999	12945	11106	9021	7988	7327	6853							
		100000	14620	10515	9021	7327	6488	5952	5566							
4 7/16 4 1/2	25750 114542	5000	25750	25750	25750	22091	19561	17944	16782							
		10000	25750	25750	22091	17944	15889	14575	13631							
		30000	25750	18520	15889	12906	11427	10483	9804							
		50000	22091	15889	13631	11072	9804	8993	8411							
		100000	17944	12906	11072	8993	7963	7305	6832							
4 15/16 5	35520 158001	5000	35520	35520	35520	30473	26983	24752								
		10000	35520	35520	34073	24752	21917	20105								
		30000	35520	25547	21917	17802	15763	14460								
		50000	30473	21917	18803	15273	13524	12405								
		100000	24752	17802	15273	12405	10985	10076								

Notes:
- Typical operating temperature ranges for standard bearings are -20° F to 220° F.
- For loads, speeds outside the rating chart, contact Application Engineering at 800-626-2093.

Installation Instructions

- **Sealmaster RPB-CR**

  Refer to page I-59

- **Sealmaster PN Gold and CR Gold**

  Refer to page K-80

PN Gold and CR Gold Bearing Installation

Mounting Housed Bearing Units:

NOTICE

• These bearings are designed for maximum permissible static misalignment of ± 2 degrees. Installation, handling or operation of the bearing in excess of the maximum of ± 2 degrees can cause reduction in bearing performance and may lead to equipment failure.

• Do not strike or hammer on any component of the bearing and/or shaft. Impact can result in damage to the bearing that may cause reduction in bearing performance and may lead to equipment failure.

Step 1: Inspect Shaft and Bore

Shaft should be within tolerance range shown in Table 1, clean and free of nicks and burrs. Mount bearings on unused section of shafting or repair/replace shafting as required. Inspect both the shaft and bearing bore for debris or contaminants. Wipe clean as necessary.

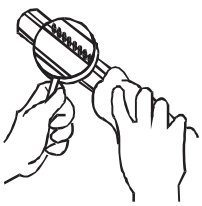

PN/CR Gold Table 1

Recommended Shaft Tolerances	
Nominal Bore Diameter	Tolerance (Inches)
1/2 - 1 15/16	+0.0000 / -0.0005
2 - 3 3/16	+0.0000 / -0.0010
3 1/4 - 4 15/16	+0.0000 / -0.0015

Step 2: Check Support Surfaces

Make sure the base of the housing and the support surfaces are clean and free from burrs. If the housing elevation is adjusted with shims these must cover the entire contact area between the housing and the support surface.

Step 3: Install Back-side Shield

If a back-side shield is used (2, 3 and 4 bolt flange units), install the shield on the shaft. Verify that the drain slot is facing downward as shown.

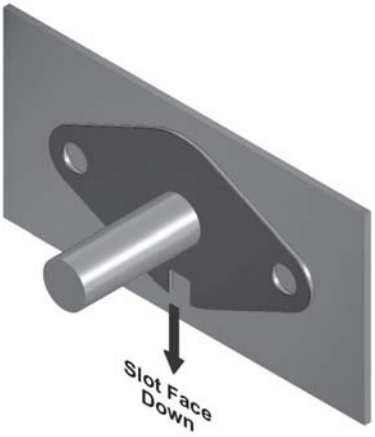

Step 4: Install Unit

To aid installation, keep weight off bearing during mounting. Slide unit onto shaft by pushing on the inner ring. If it is difficult to mount bearing on shaft, use a piece of emery cloth to reduce any high spots on the shaft.

Step 5: Fasten Unit in Place

Install housing mounting bolts and check bearing alignment. Align the bearing units as closely as possible.

Tighten mounting bolts to recommended fastener torques. Check the shaft for freedom of rotation by rotating shaft with hand in both directions.

PN Gold and CR Gold Bearing Installation continued

Step 6: Tighten Locking Mechanism

a. Setscrew Locking Inserts

Setscrews in multiple bearing applications should be aligned as shown.

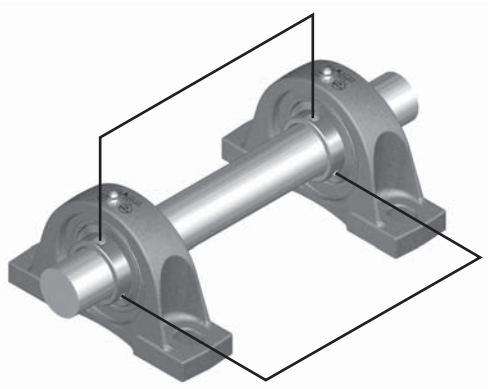

Tighten bearing units to the shaft as follows:

i. Torque the first setscrew "A" to one half of the recommended torque in Table 2.

ii. Torque the second setscrew "B" to the full recommended torque. Go back to the first setscrew "A" and tighten to the full recommended torque.

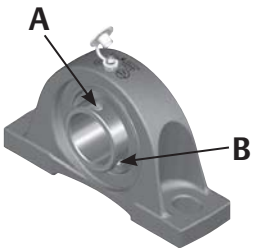

Check shaft again for freedom of rotation and then tighten the second bearing unit in the same fashion. When all bearings are tightened, perform a final check to the shaft for freedom of rotation.

PN/CR Gold Table 2

Setscrew Torque			
Screw Size	Hex Size	Inch-Pounds	
		CR-Gold	PN-Gold
1/4-28	1/8	65 - 85	35 - 45
5/16-24	5/32	125 - 165	75 - 100
3/8-24	3/16	230 - 300	125 - 145
7/16-20	7/32	350 - 450	130 - 160
1/2-20	1/4	500 - 650	N/A
5/8-18	5/16	1100 - 1440	N/A

b. Skwezloc Locking Inserts

i. Be sure that the Skwezloc collar is fitted square and snug against the shoulder on the inner ring

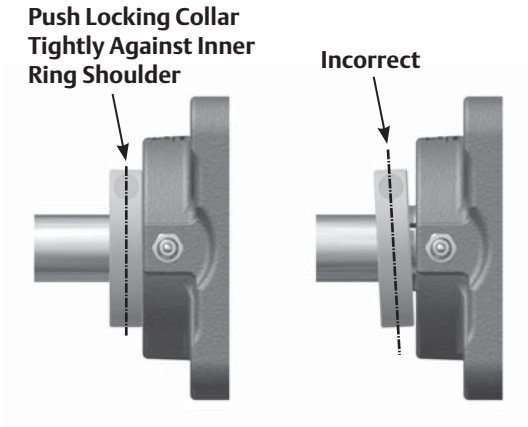

ii. Torque the Skwezloc collar cap screw to the full recommended torque in Table 3.

PN/CR Gold Table 3

Skwezloc Concentric Locking Collar Cap Screw Torque		
Screw Size	Hex Size	Inch-Pounds
# 8-32	T-25	70
# 10-24	T-27	100
1/4-20	T-30	240
5/16-18	T-45	495

Check shaft again for freedom of rotation and then tighten the second bearing unit in the same fashion. When all bearings are tightened, perform a final check to the shaft for freedom of rotation.

Optional End Cap Installation Instructions:

Polymer End Caps:

Step 1: Position End Cap

Verify that the drain hole is facing down when the cap is installed as shown. Position the end cap flush against the face of the housing.

Step 2: Install End Cap

Press the cap until it snaps into the groove in the housing. Rotate the shaft by hand to verify there is no contact between the shaft and the end cap. If an open end cap is used, there should be no contact between the shaft and the bore of the end cap as shown.

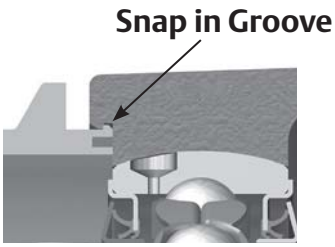

Stainless Steel End Caps:

Step 1: Position End Cap

Apply silicone sealant evenly onto the housing face where the end cap will contact (optional). Verify that the end cap drain hole is facing down when the cap is installed (for caps with two drain holes, one should be facing down). Position the end cap flush against the face of the housing.

Step 2: Install End Cap

Tighten the cap screws to affix the end cap to the housing face. Rotate the shaft by hand to verify there is no contact between the shaft and the end cap. If an open end cap is used, there should be no contact between the shaft and the bore of the end cap.

Step 3: Install V-Seal (Open End Caps Only)

Place the V-seal over the shaft. Push the seal up against the outside face of the open end cap, such that the seal lip contacts the outside face of the open end cap as shown. The assembled width of the seal should be approximately ¼ inch.

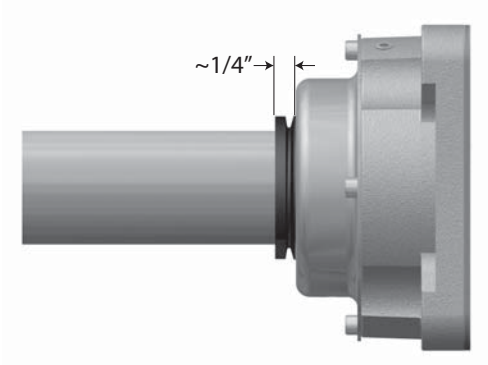

Mounting PN Gold Cylindrical O.D. (ER Style) Inserts

Replacing Existing Sealmaster Inserts:

Note:
Replacement Sealmaster bearing inserts are intended for use in Sealmaster housings only.

Step 1: Loosen and Remove Housing Mounting Bolts

Step 2: Remove Bearing from Shaft
Loosen the locking mechanism and slide the bearing off the shaft.

Step 3: Remove the Bearing Insert from the Housing
Secure housing in a vise. Remove lubrication fitting and lock pin from the housing. Do not discard the lubrication fitting or lock pin. Using a bar placed in the insert bore as a lever, swing the insert to line up the outer ring with the load slots and remove insert from load slots.

Step 4: Inspect and Prepare Housing
Housings should be inspected for damage prior to installation. Wipe housing bore clean as necessary and check that the lubrication hole is clean and free of debris. Wetting of the housing bore with oil or grease may be done to ease installation of bearing insert.

Step 5: Load New Insert
With the bearing housing still in the vise, load the insert in the following fashion:

a. Place the bearing insert into the housing load slots, positioning the insert outer ring dimple and lubrication hole in line with the housing lubrication hole.

b. Using a bar placed in the insert bore as a lever, swing the insert into place within the housing. Insert should have a snug fit in the housing. If insert can be made to swivel by hand in the housing bore, fit is too lose and entire unit should be replaced. If heavy force is required, fit is too tight and entire unit should be replaced.

c. Ensure alignment of the outer ring dimple and lubrication hole and housing lubrication hole.

Step 6: Install Lock Pin and Lubrication Fitting
Place the lock pin in the housing lubrication hole, ensuring that it seats in the outer ring dimple. Tighten the lubrication fitting into the housing lubrication hole until snug, then loosen ¼ turn.

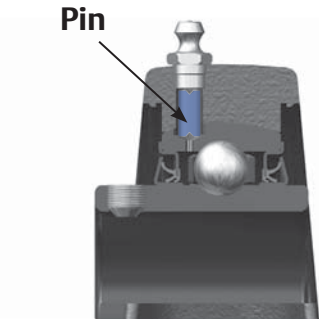

NOTICE: Over tightening or under tightening of the lubrication fitting may lead to reduction in bearing performance.

Step 7: Refer to Steps 1 - 6 from the "Mounting Housed Bearing Units" Section and the "Optional End Cap Installation Instructions" if applicable

Mounted PN Gold Cylindrical O.D. (ER Style) Inserts See page G-248

Lubrication:

All Sealmaster PN Gold and CR Gold Ball Bearings are delivered with a high quality food grade grease with an EP additive. The bearing is ready for use with no initial lubrication required. The grease consists of a calcium sulfonate thickener, mineral oil, and NLGI grade 2 consistency.

Compatibility of grease is critical; therefore consult with Application Engineering and your grease supplier to insure greases are compatible. For best performance it is recommended to relubricate with calcium sulfonate thickened grease with a comparable NLGI consistency and base oil properties.

Relubricatable Sealmaster bearings are supplied with grease fittings or zerks for ease of lubrication with hand or automatic grease guns. Always wipe the fitting and grease nozzle clean.

CAUTION: If possible, it is recommended to lubricate the bearing while rotating, until grease purge is seen from the seals. If this is not an option due to safety reasons, follow the alternate lubrication procedure below.

Alternate Lubrication Procedure:

Stop rotating equipment. Add one half of the recommended amount shown in Table 4. Start the bearing and run for a few minutes. Stop the bearing and add the second half of the recommended amount. A temperature rise after lubrication, sometimes 30°F (17°C), is normal. Bearing should operate at temperatures less than 200°F (94°C) and should not exceed 250° (121°C) for intermittent operation. For lubrication guidelines, see Tables 4 and 5.

Note: Table 5 is a general recommendation. Experience and testing may be required for specific applications.

Note: Grease charges in Table 4 are based on the use of calcium sulfonate thickened grease with a NLGI grade 2 consistency.

Speed Limits:

Note: The Maximum Operational Speeds listed in Table 6 are based on the use of a single lock setscrew insert, with single lip contact seals (1C) for CR Gold, and with HPS seals for PN Gold.

PN/CR Gold Table 4

Grease Charge for Relubrication			
Series	Bore Size		Grease Charge (Mass - Ounces)
	Standard Duty	Medium Duty	
2-012	1/2 - 3/4	---	.03
2-015	13/16 - 1	---	.04
2-13	1 1/16 - 1 1/4R	15/16 - 1	.09
2-17	1 1/4 - 1 7/16	1 3/16	.13
2-19	1 1/2 - 1 9/16	1 7/16	.18
2-111	1 5/8 - 1 3/4	1 1/2	.20
2-115	1 13/16 - 2R	1 11/16 - 1 3/4	.22
2-23	2 - 2 3/16	1 15/16	.30
2-27	2 1/4 - 2 7/16	2 3/16	.38
2-211	2 1/2 - 2 11/16	2 7/16 - 2 1/2	.53
2-215	2 13/16 - 2 15/16	2 11/16	.62
2-33	3 - 3 3/16	2 15/16	.88
2-37	3 1/4 - 3 7/16	3 3/16	1.11
2-38	3 1/2	3 7/16	1.37
2-43	3 15/16 - 4 3/16	3 15/16 - 4	2.50

PN/CR Gold Table 5

Relubrication Recommendations			
Environment	Temperature (°F)	Speed (% Catalog Max)	Frequency
Dirty	-20 to 250	0 - 100%	Daily to 1 Week
Clean	-20 to 125	0 - 25%	4 to 10 Months
		26 - 50%	1 to 4 Months
		51 - 75%	1 Week to 1 Month
		76 - 100%	Daily to 1 Week
	125 to 175	0 - 25%	2 to 6 Weeks
		26 - 50%	1 Week to 1 Month
		51 - 75%	Daily to 1 Week
		76 - 100%	
	175 to 250	0 - 100%	Daily to 1 Week

PN/CR Gold Table 6

Maximum Operational Speed			
Bore Size (inch)		Speed (RPM)	
Standard Duty	Medium Duty	CR Gold	PN Gold
1/2 - 3/4	x	6450	3100
13/16 - 1	x	6350	2700
1 1/16 - 1 1/4R	15/16 - 1	5450	2300
1 1/4 - 1 7/16	1 3/16	4650	2000
1 1/2 - 1 9/16	1 7/16	4150	1750
1 5/8 - 1 3/4	1 1/2	3800	1600
1 13/16 - 2R	1 11/16 - 1 3/4	3550	1500
2 - 2 3/16	1 15/16	3250	1350
2 1/4 - 2 7/16	2 3/16	2550	1250

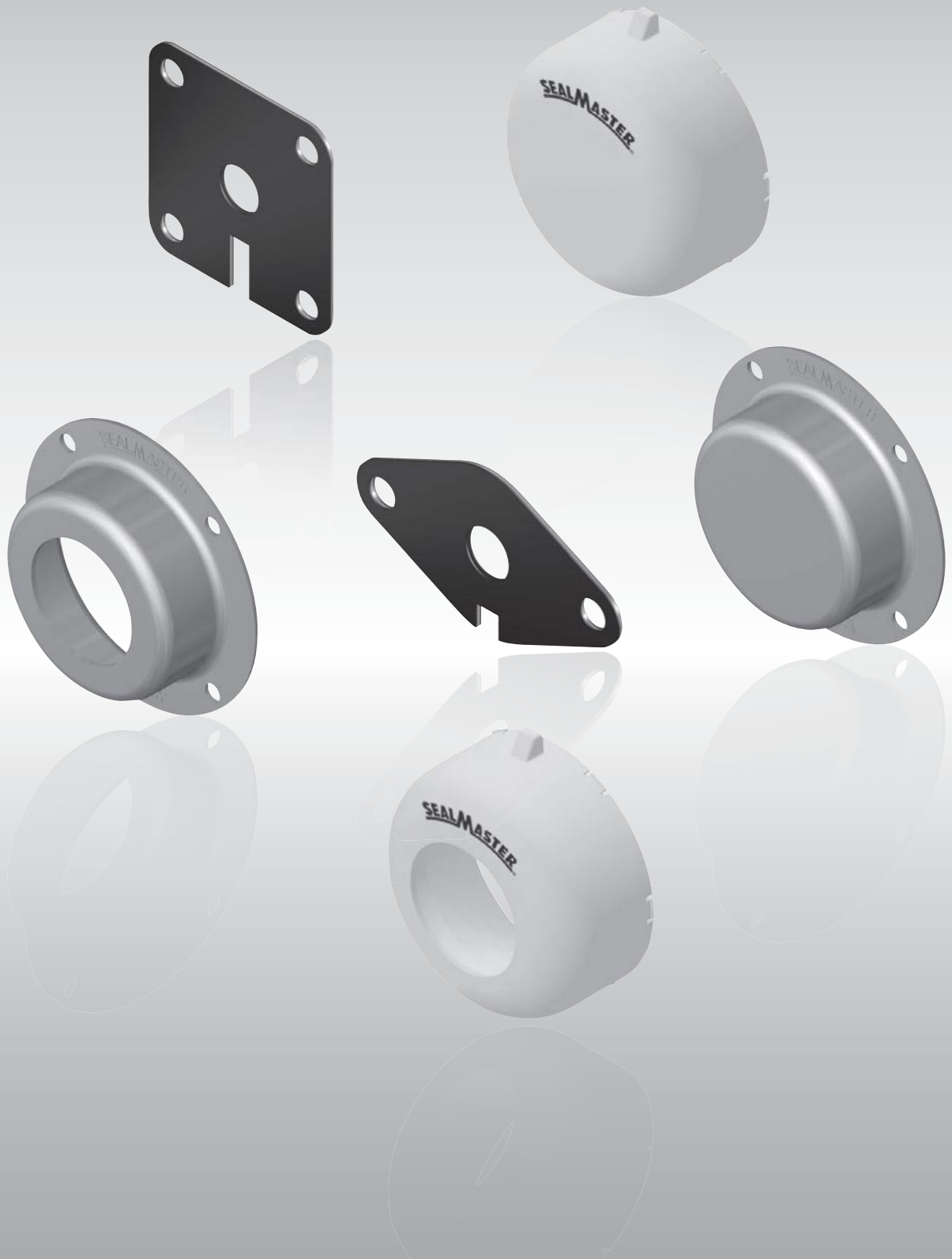
SEALMASTER
SEALMASTER
SEALMASTER
SEALMASTER

Accessories

The bearing products in this catalog may require accessories to further enhance their value. These accessories range from end caps to lubrication. These accessories can be used on several bearing platforms and are available for customization with support from our Application Engineering group.

End Caps and Backside Seals

Additional sealing accessories are available for enhanced bearing and personal protection. End caps provide a guard from rotating shafts and conform to OHSA requirements for personal protection. In addition, these accessories together can better protect against high-pressure wash down and help reduce bearing moisture contact. Backside shield gaskets are mounted between the bearing and the equipment frame to reduce moisture runoff. Depending on your preference, these accessories are illustrated on the following pages.

End Caps

End caps offer better protection against high-pressure wash down and can be used to reduce bearing moisture contact and provide personal protection to conform with OSHA and other regulatory guidelines.

Polymer Snap On Cap

Polypropylene material for resistant to corrosion, hand snap into housing for easy installation, and incorporate a shielded drain hole to reduce moisture buildup against the bearing.

Stainless Bolt On End Cap

Durable 304 stainless steel for resistance to corrosion and chemical attack, bolts onto housing with four cap screws for excellent holding power, drain hole to be positioned towards the bottom to reduce moisture buildup against the bearing.

Cap Availability

Product Line	Polymer Snap On	Stainless Bolt On
Sealmaster CR Gold Stainless	Y	N/A
Sealmaster PN Gold Stainless	Y	Y*
Sealmaster PN Gold Composite	Y	Y*
Sealmaster Material Handling	Y	Y*

*Bolt on caps for mounted ball bearings are for flange housing designs only.
Caps fit on housings that have been modified with the appropriate bolt pattern as defined by the prefix "B" in the part number.
Example: Sealmaster PN Gold CRBFTS-PN24, Sealmaster Gold BSFT-24
*Note: Additional end cap designs exist for non-standard parts or industry specific designs. Consult Application Engineering for more information.

End Cap Part Identification

Mounted Ball Bearing Caps

Bore Size		Unit Size	Polymer Snap On		Bolt On (2-bolt, 3-bolt, 4-bolt flange)	
inch	mm		Closed	Open	Closed	Open
3/4	-	12	ECC-12	ECO-12	N/A	N/A
-	20	204				
7/8	-	14	ECC-16	ECO-14	BEC-16	BEO-16
1	-	16		ECO-16		
-	25	205				
1 1/8	-	18	ECC-19	ECO-19	BEC-19	N/A
1 3/16	-	19		ECO-19		BEO-19
1 1/4R	-	20R		ECO-20R		BEO-20R
-	30	206		ECO-19		BEO-19
1 1/4	-	20	ECC-23	ECO-20	BEC-23	BEO-20
1 3/8	-	22		ECO-23		BEO-22
1 7/16	-	23		ECO-23		BEO-23
-	35	207		ECO-23		BEO-22
1 1/2	-	24	ECC-24	ECO-24	BEC-24	BEO-24
-	40	208				
1 11/16	-	27	ECC-27	ECO-27	BEC-27	BEO-27
1 3/4	-	28		N/A		BEO-28
-	45	209		N/A		BEO-28
1 15/16	-	31	ECC-31	ECO-31	BEC-31	BEO-31
2	-	32R		N/A		
-	50	210		ECO-31		
2	-	32	ECC-35	ECO-35	BEC-35	BEO-32
2 3/16	-	211				BEO-35
-	55	35				BEO-35
2 3/8	-	38	ECC-39	ECO-39	BEC-39	BEO-39
2 7/16	-	39				
-	60	212				

Notes: 1. Bolt on caps for mounted ball bearings are for flange housing designs only. Caps fit on housings that have been modified with the appropriate bolt pattern as defined by the prefix "B" in the part number. Example: Sealmaster PN Gold CRBFTS-PN24, Sealmaster Gold BSFT-24
2. Ends caps may reduce bearing misalignment capability.

Backside Shield

Backside shield gaskets are mounted between the bearing and the equipment frame to reduce moisture runoff. Backside shields are available for two and four bolt flange mounted ball bearings.

Backside shields are made of nitrile rubber gaskets to reduce bearing moisture contact mated to a 304 stainless steel plate for improved assembly strength, with drain slots to reduce moisture buildup against the back of the bearing housing.

Bore Size		Unit Size	2 Bolt Flange	4 Bolt Flange
inch	mm			
3/4	-	12	2BSS-12	4BSS-12
-	20	204		
1	-	16	2BSS-16	4BSS-16
-	25	205		
1 3/16	-	19	2BSS-19	4BSS-19
-	-	20R	2BSS-20R	4BSS-20R
-	30	206	2BSS-19	4BSS-19
1 1/4	-	20	2BSS-20	4BSS-20
1 3/8	-	22	2BSS-22	4BSS-22
-	35	207	2BSS-22	4BSS-22
1 7/16	-	23	2BSS-23	4BSS-23
1 1/2	-	24	2BSS-24	4BSS-24
-	40	-	2BSS-208	4BSS-208
1 11/16	-	27	2BSS-27	4BSS-27
-	45	-	N/A	N/A
1 15/16	-	31	2BSS-31	4BSS-31
-	50	210		
2	-	32	N/A	4BSS-32
2 3/16	-	35	2BSS-35	4BSS-35
-	55	211	2BSS-35	4BSS-35
2 3/8	-	38	2BSS-38	4BSS-38
2 7/16	-	39	N/A	4BSS-39
-	60	212	2BSS-38	4BSS-38

Sealmaster GoldPlex®-HP Grease

Formulated by Sealmaster engineers in conjunction with leading lubrication experts, GoldPlex-HP high performance mounted bearing grease is specifically designed to help maximize the operating performance of Sealmaster brand ball and roller bearings. This superior lubricant is formulated with a highly compatible lithium complex thickener and specially processed base oil. A finely tuned additive package further improves performance by providing high film strength, extreme pressure (EP), and anti-wear properties.

Sealmaster GoldPlex-HP provides effective lubrication over a wide range of temperatures with a low temperature performance of -40°F (-40°C). Test results show that GoldPlex-HP outperforms standard bearing greases in oxidation prevention and load carrying capabilities, which contribute to longer bearing life.

This lubricant's performance advantages include:

- Superior corrosion resistance
- Wide operating temperature range (-40°F to 350°F)
- Significantly lowers bearing running temperature
- Increased EP protection
- Lengthens lubrication cycles in most applications
- Excellent consistency

Availability

GoldPlex HP 14 oz.
GoldPlex HP 35 lb Pail
GoldPlex HP 120 lb Keg
GoldPlex HP 400 lb Drum

GoldPlex-HP sets a new standard for extreme pressure protection, long life and dependable performance.

Product Specifications

Thickener Type	Lithium Complex
Texture	Smooth
Color	Gold
60-Stroke Penetration, ASTM D 217, 77F	280-300
Droppino Point, ASTM D 2265, F (C)	500 (260)
Oxidation Stability, ASTM D 942, Psi Drop/100	5
Rust and Corrosion Protection, ASTM D 1743	Pass
Modified with 5% Synthetic Seawater	Pass
Water Washout, ASTM D 1264, 175F, %	5
Timken* OK Load, ASTM D 2509	50
4-Ball EP, ASTM D 2596 Weld Pt. kg	250
4-Ball Wear, ASTM D 2266, Scar Dia. Mm, 40 kg	0.60
Oil Separation, ASTM D 1742, Mass %	10
Base Oil Viscosity SUS @ 100F	575-675
Base Oil Viscosity cSt @ 100C	12.2
Base Oil Viscosity cSt @ 40C	115
NLGI #	2
Operating Temperature Range	-40°F to 350°F

GoldPlex-HP vs. Multi-Purpose Lithium Complex Grease**

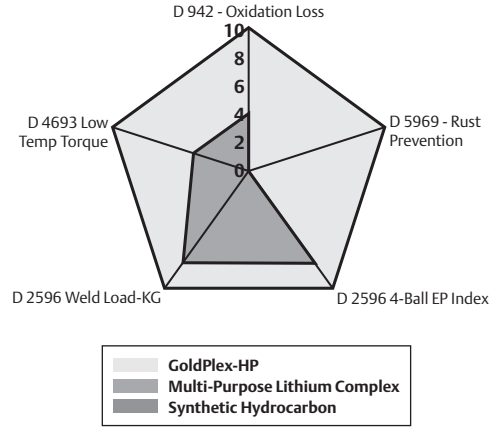

GoldPlex-HP vs. Synthetic Hydrocarbon Grease**

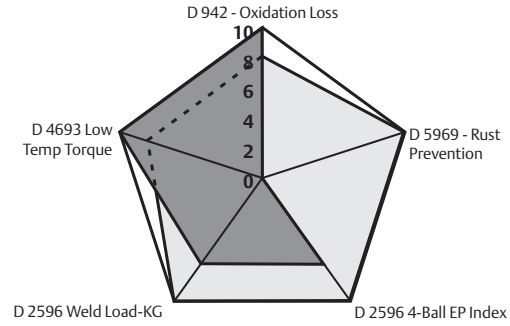

* The following trade names, trademarks and/or registered trademarks are used in this material by Regal Power Transmission Solutions for comparison purposes only, are NOT owned or controlled by ERegal Power Transmission Solutions and are believed to be owned by the following parties: The Timken Company. Regal Power Transmission Solutions cannot and does not represent or warrant the accuracy of this information.

Sealmaster GoldPlex®-FG Food Grade Grease

GoldPlex-FG food grade, mounted bearing grease is suitable for mounted bearing lubrication where incidental contact with food products may occur or any applications where clean, routine lubrication is required.

This lubricant's performance advantages include:

- Superior corrosion resistance
- Excellent water washout properties
- Compatible with major thickeners
  - Aluminum Complex
  - Calcium Complex
  - Polyurea
- USDA H1 category approved
- Superior dropping point 572°F (300°C)
- Nonstaining and nontoxic

All Sealmaster PN Gold and RPB-CR bearings are factory filled with GoldPlex-FG lubricant.

Availability

GoldPlex FG 14 oz.
GoldPlex FG 35 lb Pail
GoldPlex FG 120 lb Keg

GoldPlex-FG: Indicates food grade mounted bearing grease for use in a wide variety of bearing applications in the food and beverage industries.

Product Specifications

Thickener Type	Calcium Sulfonate
Texture	Smooth
Color	White
60-Stroke Penetration, ASTM D 217, 77F	265-295
Dropping Point, ASTM D 2265, F (C)	572 (300)
Oxidation Stability, ASTM D 942, Psi Drop/100	1
Rust and Corrosion Protection, ASTM D 1743	Pass
Modified with 5% Synthetic Seawater	Pass
Water Washout, ASTM D 1264, 175F, %	2.75
Timken* OK Load, ASTM D 2509	65
4-Ball EP, ASTM D 2596 Weld Pt. kg	620
4-Ball Wear, ASTM D 2266, Scar Dia. Mm, 40 kg	0.45
Oil Separation, ASTM D 1742, Mass %	0.2
Base Oil Viscosity SUS @ 100F	523
Base Oil Viscosity cSt @ 100C	10.5
Base Oil Viscosity cSt @ 40C	100
NLGI #	2
Operating Temperature Range	-40°F to 350°F

GoldPlex-FG vs. Al Complex Mineral Oil **

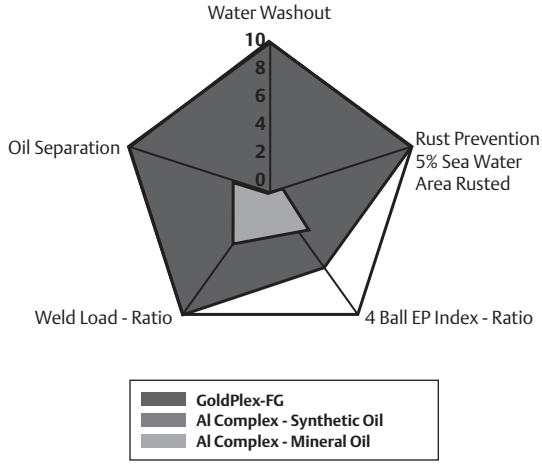

GoldPlex-FG vs. Al Complex Synthetic **

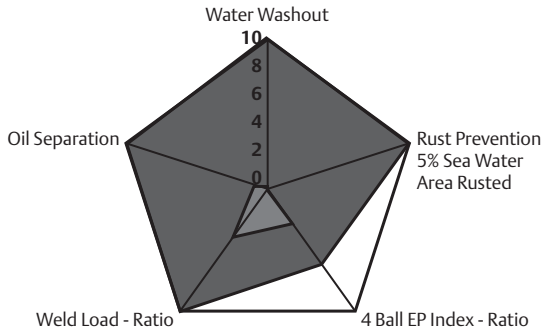

* The following trade names, trademarks and/or registered trademarks are used in this material by Regal Power Transmission Solutions for comparison purposes only, are NOT owned or controlled by Regal Power Transmission Solutions and are believed to be owned by the following parties: The Timken Company. Regal Power Transmission Solutions cannot and does not represent or warrant the accuracy of this information.

Sealmaster GoldPlex-HP Grease continued

Protective Grease Fitting Caps

	Cap Color	Description	Part No.
	Gold	Indicates that the bearing is factory filled with **Sealmaster GoldPlex-HP Grease**	759376
	White	Indicates that the bearing is factory filled with **Sealmaster GoldPlex-FG Grease**	759646
	Red	Indicates that the bearing is factory filled with **High Temperature Grease**	759647
	Black	Indicates that the bearing is factory filled with a **Non-Standard Grease**	759648

Note: The top of the grease fitting cap provides space to mark installation date.

Lubrication Fittings

Lubrication fittings provide a means quickly connecting a hose or grease gun to a bearing for relubrication. They should be permanently installed onto the bearing and can be threaded or driven into a lubrication or oil hole. It is important to select the correct lubrication fitting for the bearing and application. On Sealmaster ball bearings the lubrication fitting also functions as a stop for the lock pin. Caution should be taken when replacing the fitting on these bearings.

1/4-28 Male	A 1641B*	D 1911B*	1/8 NPT Female I 51942*	G 1/4-28 Plug
1/8 NPT Male	B 1640B*	E 1613B*	1/8 NPT Female H 43761*	J 45° 29/64 57/64 7/16 Hex 19/64 3/16 1/8 Hole
1/4 NPT Male	C 1627B*		1/8 NPT Female F 45120*	
Common Suffix	**N/A**	**CSK**	**CTJ** Includes plastic plug not shown	

*Part Numbers listed below picture drawings are Alemite part numbers. Alemite is a registered trademark of Alemite LLC. This trade name, trademark and/or registered trademark is property of their respective owner and is not owned or controlled by Regal Power Transmission Solutions

Lubrication Fittings continued

Lubrication Fitting Chart Mounted Ball Bearings

		Bore Size in Inches								
Brand	Bearing Unit Description	1/2 - 1 1/8	1 3/16 - 1 1/4R or S	1 1/4 - 1 5/8	1 11/16 - 1 3/4	1 7/18 - 2 1/8	2 3/16	2 1/4 - 2 7/8	2 15/16	3+
Sealmaster	FB, FBMH	A	A	A	-	B	-	-	-	-
	MFC	A	A	A	B	B	B	B	C	C
	MFP	-	-	-	-	B	B	B	C	C
	MP, EMP, MPD	A	A	A	B	B	B	B	C	C
	MSC	A	A	A	A	A	B	B	B	B
	MSF, EMSF	A	A	A	B	B	B	B	C	C
	MSFPD	-	-	-	-	B	B	B	C	C
	MSFT	A	A	A	B	B	-	-	-	-
	MSPD	-	-	-	B	B	B	B	C	C
	MST	D	D	D	E	E	E	E	E+F	E+F
	NP , ENP, NPMH	A	A	A	A	B	B	B	-	-
	NPD	A	A	A	A	B	B	B	-	-
	NPL	A	A	A	A	B	B	B	-	-
	SC	A	A	A	A	A	A	B	B	-
	SCHB	G	G	G	H	H	H	H	H	F
	SEHB	A	A	A	B	B	B	B	B	C
	SF. ESF, SFMH	A	A	A	A	B	B	B	B	-
	SFC	A	A	A	A	B	B	B	B	C
	SFT, ESFT, SFTMH	A	A	A	A	B	B	-	-	-
	SP	A	A	A	A	B	B	B	B	C
	SPD	A	A	A	A	B	B	B	B	C
	SPM	-	A	A	B	B	B	B	-	-
	ST, STMH	D	D	D	D	E	E	E	E	E
	TB, TBMH	A	A	A	A	B	-	-	-	-
	TFT	A	A	A	-	-	-	-	-	-
Browning	VF2B-200	A	A	B	B	B	B	-	-	-
	VF2B-300	A	B	B	B	B	-	-	-	-
	VF2E-100, 200	A	A	B	B	B	B	B	B	-
	VF2E-100M	A	A	A	-	-	-	-	-	-
	VF2S-100, 200	A	A	B	B	B	B	B	B	-
	VF2S-100M	A	A	A	-	-	-	-	-	-
	VF2S-300	A	B	B	B	B	-	-	-	-
	VF3E-100M	A	A	A	-	-	-	-	-	-
	VF3S-100M	A	A	A	-	-	-	-	-	-
	VF4B-200	A	A	B	B	B	B	B	-	-
	VF4B-300	A	B	B	B	B	B	-	-	-
	VF4E-100, 200	A	A	B	B	B	B	B	B	-
	VF4S-100, 200	A	A	B	B	B	B	B	B	-
	VFBS-200	A	A	B	-	B	-	-	-	-
	VFBB-200	A	A	B	-	B	-	-	-	-
	VF4S-300	A	B	B	B	B	B	B	B	B
	VFCB-200	A	A	A	A	A	A	B	-	-
	VFCB-300	A	A	A	A	A	B	-	-	-
	VFCS-200	A	A	A	A	A	A	B	-	-
	VFCS-300	A	A	A	A	A	B	B	B	B
	VPB-200	A	A	B	B	B	B	B	-	-
	VPB-300	A	B	B	B	B	B	-	-	-
	VPE-100, 200	A	A	B	B	B	B	B	B	-
	VPE-100M	A	A	A	-	-	-	-	-	-
	VPLB-200	A	A	B	B	B	B	B	-	-
	VPLE-100, 200	A	A	B	B	B	B	B	B	-
	VPLS-100, 200	A	A	B	B	B	B	B	B	-
	VPS-100, 200	A	A	B	B	B	B	B	B	-
	VPS-100M	A	A	A	-	-	-	-	-	-
	VPS-300	A	B	B	B	B	B	B	B	B
	VTBE-100	A	A	B	B	B	-	-	-	-
	VTBE-200	A	A	B	B	B	B	B	-	-
	VTBS-100, 200	A	A	B	B	B	-	-	-	-
	VTWE-100, 200	D	D	E	E	E	E	E	-	-
	VTWS-100, 200	D	D	E	E	E	E	E	-	-
	VTWS-300	D	E	E	E	E	E	E	E	E

Lubrication Fittings continued

Lubrication Fitting Chart Mounted Roller Bearings

Brand	Series	All Shaft Sizes
Browning	FBE920, PBE920	B
	TUE920	E
Sealmaster	DRPB	B
	RPB	B
	RPBXT	B
	RFB	B
	RFP	B
	SPB	B
	USBF	J
	USFB, USFBE USF3B	B
	USFC	A
	USFCE, USRB USRBE	B
	USTU	E

Lubrication Fitting Chart Cam Followers

CF / CFH Inch Camrol			
From Sizes	To Sizes	Lube Fitting Size	Part No.
1/2”	11/16”	1/8” Drive	3019*
3/4”	2 3/4”	3/16” Drive	1728B*
3”	4”	1/4” Drive	1743B*
5”	10”	1/4” NPT	1627B*

Lubrication Fitting Chart Sealmaster Rod Ends

Bore Size	Fitting Number	Thread Size	Hex size
1/4” - 7/16”	#3018 (no ball check)	#6-40 UNF-2A	1/4”
1/2” - 1”	#3016 (no ball check)	#10-32 UNF-2A	1/4”

*Part Numbers listed below picture drawings are Alemite part numbers. Alemite is a registered trademark of Alemite LLC. This trade name, trademark and/or registered trademark is property of their respective owner and is not owned or controlled by Regal Power Transmission Solutions

Oil Hole Plugs

Oil hole plugs are used to block lubrication holes when the port is not required for relubrication the bearing. These plugs help retain the grease or oil, and also help prevent contamination from entering the bearing. All McGill Cam Followers are supplied with oil hole plugs for the number of lubrication holes present.

	Description	Part ID	Pack Qty	inch		Type
				Basic Diameter	Basic Length	
INCH	CF-1/2 Brass Plug	9712160050	100 pc	.131	.095	Solid
	CF-3/4 Solid Plug	9712160075	100 pc	.194	.125	Solid
	CF-3 Steel Plug	9712160300	100 pc	.255	.25 to .31	Hollow

For more information on bearing capabilities outside of our standard offering, please contact Application Engineering (800) 626-2093.


ROLLWAY
NUP 222 EM
ROLLWAY
NUP 222 EM

Aerospace, Specialty and Industry Specific Bearings

Aerospace and specialty bearings are designed to meet unique aerospace and specialty industrial requirements. With over 75 years of bearing manufacturing experience and over 60 years of aerospace bearing experience, McGill bearings continue to set standards in the bearing world. Today, McGill is a key supplier to many major aerospace OEM's. Likewise, Rollway Bearings have been utilized in various industrial applications for the past century. Rollway has produced specialized bearings for demanding applications in a wide variety of industries.

World Class Quality

We can manufacture to meet a variety of specialty process and quality requirements. Our manufacturing facility has achieved Nadcap accreditation for our heat treating, chemical processing and nondestructive testing as well as AS9100 certification. To improve lead time and control quality, the majority of our heat treatment is done in our facility.

Accredited Nadcap™

Integrated Engineering and Design Support from Start to Finish.

Our engineers and creative teams will work closely with you during every stage of the process to apply, design, engineer, and manufacture your highly customized bearings. McGill engineers run a comprehensive testing laboratory. Here our engineering teams perform virtual and physical testing. We are able to simulate a variety of aerospace applications, such as oil-out transmission conditions, de-icing chemical exposure and accelerated-life testing. McGill engineers also test and analyze the interaction of lubrication, surface finishes and contamination. We will help save you time and money if you involve our highly qualified engineers as early as possible in the design formation stage.

Aerospace and Specialty Bearings

McGILL®

Bearing Types

- Cylindrical Roller
- Needle Roller
- Spherical Roller
- Precision Rollers
- Angular Contact, Gothic Arch & Radial Ball
- Aircraft Cam Followers & Track Rollers

Size and Precision

- Size Offering
  - 12 - 300 mm O.D.
  - 6 – 250 mm I.D.
- Roller Bearing Precision
  - RBEC 1,3,5
- Ball Precision
  - ABEC 1,3,5

Variety of Capabilities

- Flange Outer
- Gothic Arch
- Notches / Slots
- Riveted Retainers
- Multiple External Tabs
- Straight or Tapered Bore
- Geared Outer

Materials

- Standard Bearing Quality
- Specialty Steels
  - High Temperature
  - Corrosion Resistant

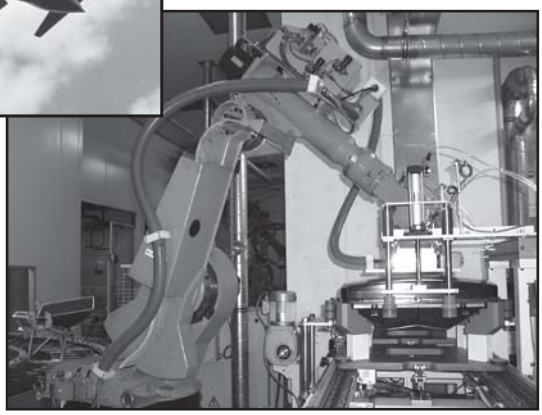

Applications

- Helicopter
  - Main gearboxes
  - Intermediate and tail-rotor gearboxes
  - Main rotors and tail-rotor
- Fixed-wing aircraft
  - Flaps and slats
  - Door mechanisms
- Other aerospace and military
  - Starters
  - Hydraulic systems
  - Control mechanisms
  - Weapons
  - Aircraft Carriers
  - Ground Vehicles
- Industrial
  - Rolling Mill equipment
  - Plastics and rubber extrusion equipment
  - Mining and construction equipment
  - Petrochemical processing equipment
  - Oil Field Equipment
  - Pumps and compressors
  - Material Handling
  - Can-making equipment
  - Medium to high speed gear boxes
  - Turbo machinery
  - Printing equipment
  - Paper converting equipment
  - Precision positioning equipment

Specifically for the commercial-passenger-jet industry, McGill has developed custom bearing solutions that include ball and roller bearings used for aircraft auxiliary pumps; thin-section, corrosion-resistant ball bearings in aircraft-control applications; and track rollers for flap and slat applications.

Within the helicopter industry, McGill has worked with customers to optimize load capability and weight for their specific applications. For instance, McGill has developed spherical roller planetary bearings for helicopter transmissions, and ball and roller bearings with different integral antirotation devices, such as flanges, slots and tabs.

McGill has produced a variety of specialty bearings for industrial applications as well as aerospace. Products range from modifications of standard industrial parts to completely new designs to fit specific applications. Common special features include extra precision, unique geometries and/or specialty materials.

Rollway Bearings for the Oil Field

Rollway Bearings has been a reliable component in the oil field industry for the past few decades. We have the unique capability to provide a wide variety of bearings ranging from large bore cylindrical radial bearings, tapered thrust bearings, complimented by McGill precision bearings for your replacement and re-build needs.

We manufacture a variety of styles of bearings for the following oil field applications:

- Mud pumps
- Draw works
- Top drives
- Frac pumps
- Crane hooks
- Cranes
- Swivels
- Winches

These are only a portion of the Oilfield applications we regularly provide bearings for.

ROLLWAY® *Motorized Wheel Bearings*

Rollway Wheel Bearings for Off-Highway Vehicle Electric Wheels

GE* Motorized Wheels used In

- Unit Rig Trucks
- Liebherr* / Wiseda* Trucks
- Euclid* / Hitachi* Trucks
- Komatsu* Trucks

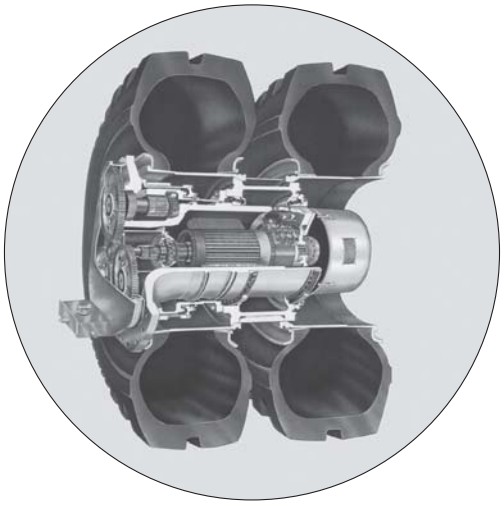

Rollway is committed to providing value to the mining industry by manufacturing the best value cylindrical roller bearings available. Whether you're looking to replace an armature bearing as a result of an inspection or all the motor bearings for a rebuild, Rollway is there providing high quality bearings, when you need them. The combination of reliable performance and availability will help your trucks maintain more "Uptime" which translates to more loads per day.

Rollway Number	GE Wheel Number GE Wheel Number	GE Part Number	Location
U-2934-LP-033	772	8864951P180	Planetary Gear
E-5019-U-103	772	8864951P114	Planetary Pinion
E-5019-U-105	772	8864950P111	Planetary Pinion
MUC-224-014	772, 776, 791	8864951P139	Pinion End Armature
E-5220-U-112	772, 776, 791	8864951P118	Planetary Pinion
E-5220-U-118	776, 791	8864951P297	Planetary Pinion
E-5040-U-103	787, 788	8864951P200	Planetary Pinion
E-5044-UMR-105	787, 788	8864951P206	Planetary Pinion
NU 1030 M1C3	787, 788, GDY85	8864951P163	Pinion End Armature

In recognition of proven performance, Rollway is an approved supplier of GE* motorized wheel bearings.

Legacy Product Substitution Guide

Over time various products may be phased out, discontinued or obsoleted creating legacy products.This guide is for reference only to help find substitute options for a legacy product.

The substitute product listed should be reviewed prior to installation by reviewing the product data sheet, installation instructions, and relubrication guidelines.

For more information visit Smart Interchange at: www.RegalPTS.com or contact Application Engineering 800-626-2093

Legacy Product Substitution Guide

Browning Large Bore to Sealmaster Large Bore Mounted Ball Bearings

	Primary Substitute*	Alternate Substitute*
Browning Part Description*	Sealmaster Part Description	Sealmaster Part Description
VE-243	Insert - No Substitute	
VE-247	Insert - No Substitute	
VER-243	ER-43	ER-43C
VER-247	ER-47	ER-47C
VER-248	ER-48	ER-48C
VER-251	ER-51	ER-51C
VF2E-243 (eccentric lock)	No Direct Substitute	
VF2E-247 (eccentric lock)	No Direct Substitute	
VF2S-243	No Direct Substitute	
VF2S-247	No Direct Substitute	
VF4E-243 (eccentric lock)	No Direct Substitute	SF-43 (setscrew lock)
VF4E-247 (eccentric lock)	No Direct Substitute	SF-47 (setscrew lock)
VF4S-243	SF-43	SF-43C
VF4S-247	SF-47	SF-47C
VF4S-339	MSF-39	MSF-39C
VF4S-340	MSF-40	MSF-40C
VF4S-343	MSF-43	MSF-43C
VF4S-347	MSF-47	MSF-47C
VF4S-348	MSF-48	MSF-48C
VF4S-355	MSF-55	MSF-55C
VF4S-356	MSF-56	MSF-56C
VF4S-363	MSF-63	MSF-63C
VFCS-240	SFC-40	SFC-40C
VFCS-243	SFC-43	SFC-43C
VFCS-339	MFC-39	MFC-39C
VFCS-340	MFC-40	MFC-40C
VFCS-343	MFC-43	MFC-43C
VFCS-347	MFC-47	MFC-47C
VFCS-348	MFC-48	MFC-48C
VFCS-355	MFC-55	MFC-55C
VFCS-356	MFC-56	MFC-56C
VFCS-363	MFC-63	MFC-63C

	Primary Substitute*	Alternate Substitute*
Browning Part Description*	Sealmaster Part Description	Sealmaster Part Description
VPE-247 (eccentric lock)	No Direct Substitute	NP-47 (setscrew lock)
VPLE-243 (eccentric lock)	No Direct Substitute	NPL-43 (setscrew lock)
VPLE-247 (eccentric lock)	No Direct Substitute	
VPLS-243	NPL-43	N/A
VPLS-247	No Direct Substitute	
VPS-247	NPL-47	NPL-47C
VPS-339	MP-39	MP-39C
VPS-340	MP-40	MP-40C
VPS-343	MP-43	MP-43C
VPS-347	MP-47	MP-47C
VPS-348	MP-48	MP-48C
VPS-355	MP-55	MP-55C
VPS-356	MP-56	MP-56C
VPS-363	MP-63	MP-63C
VS-243	Insert - No Substitute	
VS-247	Insert - No Substitute	
VS-256	Insert - No Substitute	
VS-339	Insert - No Substitute	
VS-340	Insert - No Substitute	
VS-343	Insert - No Substitute	
VS-347	Insert - No Substitute	
VS-348	Insert - No Substitute	
VS-355	Insert - No Substitute	
VS-356	Insert - No Substitute	
VS-363	Insert -No Substitute	
VTWS-339	MST-39	MST-39C
VTWS-340	MST-40	MST-40C
VTWS-343	MST-43	MST-43C
VTWS-347	MST-47	MST-47C
VTWS-348	MST-48	MST-48C

*Notes:
1. Browning product shown uses a single lip contact seal and flinger. Primary Substitute is the Sealmaster Gold felt seal. Alternate Substitute is contact seal.
2. In some cases, locking design changes and is noted with Substitute part.

The Substitute products listed should be reviewed prior to installation by reviewing the product data sheet, installation instructions, and relubrication guidelines.
For more information visit Smart Interchange at: www.RegalPTS.com or contact Application Engineering 800-626-2093

Browning SPB1000 to Sealmaster USRB Mounted Spherical Roller Bearings Substitution Guide

Browning SPB1000 Part Description	Sealmaster USRB Part Description
SBF1000E3X 1 15/16	USBF5000E-115
SBF1000E3X 1 7/16	USBF5000E-107
SBF1000E4X 2 7/16	USBFF5000E-207
SBF1000EC3X 1 15/16	USBF5000E-115-C
SBF1000EC3X 1 7/16	USBF5000E-107-C
SBF1000EC4X 2 7/16	USBFF5000E-207-C
SBF1000NE3X 1 15/16	USBF5000-115
SBF1000NE3X 1 7/16	USBF5000-107
SBF1000NE4X 2 7/16	USBFF5000-207
SBF1000NEC3X 1 7/16	USBF5000-107-C
SBF1000NEC3X1 15/16	USBF5000-115-C
SBF1000NEC4X 2 7/16	USBFF5000-207-C
SFB1000E3X 1 1/2	USF3B5000E-108
SFB1000E3X 1 1/8	USF3B5000E-102
SFB1000E3X 1 3/16	USF3B5000E-103
SFB1000E3X 1 7/16	USF3B5000E-107
SFB1000ECX 1 1/2	USFB5000E-108-C
SFB1000ECX 1 11/16	USFB5000E-111-C
SFB1000ECX 1 15/16	USFB5000E-115-C
SFB1000ECX 1 3/4	USFB5000E-112-C
SFB1000ECX 1 7/16	USFB5000E-107-C
SFB1000ECX 2 1/2	USFB5000E-208-C
SFB1000ECX 2 11/16	USFB5000E-211-C
SFB1000ECX 2 15/16	USFB5000E-215-C
SFB1000ECX 2 3/16	USFB5000E-203-C
SFB1000ECX 2 3/4	USFB5000E-212-C
SFB1000ECX 2 7/16	USFB5000E-207-C
SFB1000ECX 3 1/2	USFB5000E-308-C
SFB1000ECX 3 11/16	USFB5000E-311-C
SFB1000ECX 3 15/16	USFB5000E-315-C
SFB1000ECX 3 3/16	USFB5000E-303-C
SFB1000ECX 3 7/16	USFB5000E-307-C
SFB1000ECX2	USFB5000E-200-C
SFB1000ECX3	USFB5000E-300-C
SFB1000ECX4	USFB5000E-400-C
SFB1000EX 1 1/2	USFB5000E-108
SFB1000EX 1 11/16	USFB5000E-111
SFB1000EX 1 15/16	USFB5000E-115
SFB1000EX 1 3/4	USFB5000E-112
SFB1000EX 1 7/16	USFB5000E-107
SFB1000EX 2 1/2	USFB5000E-208
SFB1000EX 2 11/16	USFB5000E-211
SFB1000EX 2 15/16	USFB5000E-215
SFB1000EX 2 3/16	USFB5000E-203

Browning SPB1000 Part Description	Sealmaster USRB Part Description
SFB1000EX 2 3/4	USFB5000E-212
SFB1000EX 2 7/16	USFB5000E-207
SFB1000EX 3 1/2	USFB5000E-308
SFB1000EX 3 11/16	USFB5000E-311
SFB1000EX 3 15/16	USFB5000E-315
SFB1000EX 3 3/16	USFB5000E-303
SFB1000EX 3 7/16	USFB5000E-307
SFB1000EX2	USFB5000E-200
SFB1000EX3	USFB5000E-300
SFB1000EX4	USFB5000E-400
SFB1000NE3X 1 1/2	USF3B5000-108
SFB1000NE3X 1 1/4	USF3B5000-104
SFB1000NE3X 1 1/8	USF3B5000-102
SFB1000NE3X 1 3/16	USF3B5000-103
SFB1000NE3X 1 7/16	USF3B5000-107
SFB1000NECX 1 1/2	USFB5000-108-C
SFB1000NECX 1 11/16	USFB5000-111-C
SFB1000NECX 1 15/16	USFB5000-115-C
SFB1000NECX 1 3/4	USFB5000-111
SFB1000NECX 1 3/4	USFB5000-112-C
SFB1000NECX 1 7/16	USFB5000-107-C
SFB1000NECX 2 1/2	USFB5000-208-C
SFB1000NECX 2 11/16	USFB5000-211-C
SFB1000NECX 2 15/16	USFB5000-215-C
SFB1000NECX 2 3/16	USFB5000-203-C
SFB1000NECX 2 3/4	USFB5000-212
SFB1000NECX 2 7/16	USFB5000-207-C
SFB1000NECX 3 1/2	USFB5000-308-C
SFB1000NECX 3 11/16	USFB5000-311-C
SFB1000NECX 3 15/16	USFB5000-315-C
SFB1000NECX 3 3/16	USFB5000-303-C
SFB1000NECX 3 7/16	USFB5000-307-C
SFB1000NECX2	USFB5000-200-C
SFB1000NECX3	USFB5000-300-C
SFB1000NECX4	USFB5000-400-C
SFB1000NEX 1 1/2	USFB5000-108
SFB1000NEX 1 15/16	USFB5000-115
SFB1000NEX 1 3/4	USFB5000-112
SFB1000NEX 1 7/16	USFB5000-107
SFB1000NEX 2 1/2	USFB5000-208
SFB1000NEX 2 11/16	USFB5000-211
SFB1000NEX 2 15/16	USFB5000-215
SFB1000NEX 2 3/16	USFB5000-203
SFB1000NEX 2 3/4	USFB5000-212-C

Browning SPB1000 Part Description	Sealmaster USRB Part Description
SFB1000NEX 2 7/16	USFB5000-207
SFB1000NEX 3 1/2	USFB5000-308
SFB1000NEX 3 11/16	USFB5000-311
SFB1000NEX 3 15/16	USFB5000-315
SFB1000NEX 3 3/16	USFB5000-303
SFB1000NEX 3 7/16	USFB5000-307
SFB1000NEX2	USFB5000-200
SFB1000NEX3	USFB5000-300
SFB1000NEX4	USFB5000-400
SFB1100EX 1 15/16	USFBE5000E-115
SFB1100EX 2 1/2	USFBE5000E-208
SFB1100EX 2 11/16	USFBE5000E-211
SFB1100EX 2 15/16	USFBE5000E-215
SFB1100EX 2 3/16	USFBE5000E-203
SFB1100EX 2 3/4	USFBE5000E-212
SFB1100EX 2 7/16	USFBE5000E-207
SFB1100EX 3 1/2	USFBE5000E-308
SFB1100EX 3 11/16	USFBE5000E-311
SFB1100EX 3 15/16	USFBE5000E-315
SFB1100EX 3 3/16	USFBE5000E-303
SFB1100EX 3 7/16	USFBE5000E-307
SFB1100EX2	USFBE5000E-200
SFB1100EX3	USFBE5000E-300
SFB1100EX4	USFBE5000E-400
SFB1100NECX 2 11/16	USFBE5000-211-C
SFB1100NECX 2 15/16	USFBE5000-215-C
SFB1100NECX 2 3/4	USFBE5000-212-C
SFB1100NECX 3 1/2	USFBE5000-308-C
SFB1100NECX 3 3/16	USFBE5000-303-C
SFB1100NECX 3 7/16	USFBE5000-307-C
SFB1100NECX3	USFBE5000-300-C
SFB1100NEX 1 15/16	USFBE5000-115
SFB1100NEX 2 1/2	USFBE5000-208
SFB1100NEX 2 11/16	USFBE5000-211
SFB1100NEX 2 15/16	USFBE5000-215
SFB1100NEX 2 3/16	USFBE5000-203
SFB1100NEX 2 3/4	USFBE5000-212
SFB1100NEX 2 7/16	USFBE5000-207
SFB1100NEX 3 11/16	USFBE5000-311
SFB1100NEX 3 3/16	USFBE5000-303
SFB1100NEX 3 7/16	USFBE5000-307
SFB1100NEX4	USFBE5000-400
SFC1000ECX 1 1/2	USFC5000E-108-C
SFC1000ECX 1 11/16	USFC5000E-111-C

The substitute products listed should be reviewed prior to installation by reviewing the product data sheet, installation instructions, and relubrication guidelines.
For more information visit Smart Interchange at: www.RegalPTS.com or contact Application Engineering 800-626-2093.

Browning SPB1000 to Sealmaster USRB Mounted Spherical Roller Bearings Substitution Guide Continued

Browning SPB1000 Part Description	Sealmaster USRB Part Description
SFC1000ECX 1 15/16	USFC5000E-115-C
SFC1000ECX 1 3/4	USFC5000E-112-C
SFC1000ECX 1 7/16	USFC5000E-107-C
SFC1000ECX 2 1/2	USFC5000E-208-C
SFC1000ECX 2 11/16	USFC5000E-211-C
SFC1000ECX 2 15/16	USFC5000E-215-C
SFC1000ECX 2 3/16	USFC5000E-203-C
SFC1000ECX 2 3/4	USFC5000E-212-C
SFC1000ECX 2 7/16	USFC5000E-207-C
SFC1000ECX 3 1/2	USFC5000E-308-C
SFC1000ECX 3 11/16	USFC5000E-311-C
SFC1000ECX 3 15/16	USFC5000E-315-C
SFC1000ECX 3 3/16	USFC5000E-303-C
SFC1000ECX 3 7/16	USFC5000E-307-C
SFC1000ECX2	USFC5000E-200-C
SFC1000ECX3	USFC5000E-300-C
SFC1000ECX4	USFC5000E-400-C
SFC1000EX 1 1/2	USFC5000E-108
SFC1000EX 1 11/16	USFC5000E-111
SFC1000EX 1 15/16	USFC5000E-115
SFC1000EX 1 3/4	USFC5000E-112
SFC1000EX 1 7/16	USFC5000E-107
SFC1000EX 2 1/2	USFC5000E-208
SFC1000EX 2 11/16	USFC5000E-211
SFC1000EX 2 15/16	USFC5000E-215
SFC1000EX 2 3/16	USFC5000E-203
SFC1000EX 2 3/4	USFC5000E-212
SFC1000EX 2 7/16	USFC5000E-207
SFC1000EX 3 1/2	USFC5000E-308
SFC1000EX 3 11/16	USFC5000E-311
SFC1000EX 3 15/16	USFC5000E-315
SFC1000EX 3 3/16	USFC5000E-303
SFC1000EX 3 7/16	USFC5000E-307
SFC1000EX2	USFC5000E-200
SFC1000EX3	USFC5000E-300
SFC1000EX4	USFC5000E-400
SFC1000NECX 1 1/2	USFC5000-108-C
SFC1000NECX 1 11/16	USFC5000-111-C
SFC1000NECX 1 15/16	USFC5000-115-C
SFC1000NECX 1 3/4	USFC5000-112-C
SFC1000NECX 1 7/16	USFC5000-107-C
SFC1000NECX 2 1/2	USFC5000-208-C
SFC1000NECX 2 11/16	USFC5000-211-C
SFC1000NECX 2 15/16	USFC5000-215-C

Browning SPB1000 Part Description	Sealmaster USRB Part Description
SFC1000NECX 2 3/16	USFC5000-203-C
SFC1000NECX 2 3/4	USFC5000-212-C
SFC1000NECX 2 7/16	USFC5000-207-C
SFC1000NECX 3 1/2	USFC5000-308-C
SFC1000NECX 3 11/16	USFC5000-311-C
SFC1000NECX 3 15/16	USFC5000-315-C
SFC1000NECX 3 3/16	USFC5000-303-C
SFC1000NECX 3 7/16	USFC5000-307-C
SFC1000NECX2	USFC5000-200-C
SFC1000NECX3	USFC5000-300-C
SFC1000NECX4	USFC5000-400-C
SFC1000NEX 1 1/2	USFC5000-108
SFC1000NEX 1 11/16	USFC5000-111
SFC1000NEX 1 15/16	USFC5000-115
SFC1000NEX 1 3/4	USFC5000-112
SFC1000NEX 1 7/16	USFC5000-107
SFC1000NEX 2 1/2	USFC5000-208
SFC1000NEX 2 11/16	USFC5000-211
SFC1000NEX 2 15/16	USFC5000-215
SFC1000NEX 2 3/16	USFC5000-203
SFC1000NEX 2 3/4	USFC5000-212
SFC1000NEX 2 7/16	USFC5000-207
SFC1000NEX 3 1/2	USFC5000-308
SFC1000NEX 3 11/16	USFC5000-311
SFC1000NEX 3 15/16	USFC5000-315
SFC1000NEX 3 3/16	USFC5000-303
SFC1000NEX 3 7/16	USFC5000-307
SFC1000NEX2	USFC5000-200
SFC1000NEX3	USFC5000-300
SFC1000NEX4	USFC5000-400
SFC1100ECX 1 15/16	USFCE5000E-115-C
SFC1100ECX 2 1/2	USFCE5000E-208-C
SFC1100ECX 2 11/16	USFCE5000E-211-C
SFC1100ECX 2 15/16	USFCE5000E-215-C
SFC1100ECX 2 3/16	USFCE5000E-203-C
SFC1100ECX 2 3/4	USFCE5000E-212-C
SFC1100ECX 2 7/16	USFCE5000E-207-C
SFC1100ECX 3 1/2	USFCE5000E-308-C
SFC1100ECX 3 11/16	USFCE5000E-311-C
SFC1100ECX 3 15/16	USFCE5000E-315-C
SFC1100ECX 3 3/16	USFCE5000E-303-C
SFC1100ECX 3 7/16	USFCE5000E-307-C
SFC1100ECX2	USFCE5000E-200-C
SFC1100ECX3	USFCE5000E-300-C

Browning SPB1000 Part Description	Sealmaster USRB Part Description
SFC1100ECX4	USFCE5000E-400-C
SFC1100EX 1 15/16	USFCE5000E-115
SFC1100EX 2 11/16	USFCE5000E-211
SFC1100EX 2 15/16	USFCE5000E-215
SFC1100EX 2 3/4	USFCE5000E-212
SFC1100EX 3 1/2	USFCE5000E-308
SFC1100EX 3 11/16	USFCE5000E-311
SFC1100EX 3 15/16	USFCE5000E-315
SFC1100EX 3 3/16	USFCE5000E-303
SFC1100EX 3 7/16	USFCE5000E-307
SFC1100EX3	USFCE5000E-300
SFC1100EX4	USFCE5000E-400
SFC1100NECX 1 15/16	USFCE5000-115-C
SFC1100NECX 2 1/2	USFCE5000-208-C
SFC1100NECX 2 11/16	USFCE5000-211-C
SFC1100NECX 2 15/16	USFCE5000-215-C
SFC1100NECX 2 3/16	USFCE5000-203-C
SFC1100NECX 2 3/4	USFCE5000-212-C
SFC1100NECX 2 7/16	USFCE5000-207-C
SFC1100NECX 3 1/2	USFCE5000-308-C
SFC1100NECX 3 11/16	USFCE5000-311-C
SFC1100NECX 3 15/16	USFCE5000-315-C
SFC1100NECX 3 3/16	USFCE5000-303-C
SFC1100NECX 3 7/16	USFCE5000-307-C
SFC1100NECX2	USFCE5000-200-C
SFC1100NECX3	USFCE5000-300-C
SFC1100NECX4	USFCE5000-400-C
SFC1100NEX 1 15/16	USFCE5000-115
SFC1100NEX 2 1/2	USFCE5000-208
SFC1100NEX 2 11/16	USFCE5000-211
SFC1100NEX 2 15/16	USFCE5000-215
SFC1100NEX 2 3/16	USFCE5000-203
SFC1100NEX 2 3/4	USFCE5000-212
SFC1100NEX 2 7/16	USFCE5000-207
SFC1100NEX 3 1/2	USFCE5000-308
SFC1100NEX 3 11/16	USFCE5000-311
SFC1100NEX 3 15/16	USFCE5000-315
SFC1100NEX 3 3/16	USFCE5000-303
SFC1100NEX 3 7/16	USFCE5000-307
SFC1100NEX2	USFCE5000-200
SFC1100NEX4	USFCE5000-400
SFC2107-C	USFC5000A-107-C
SFC2108-C	USFC5000A-108-C
SFC2111-C	USFC5000A-111-C

The substitute products listed should be reviewed prior to installation by reviewing the product data sheet, installation instructions, and relubrication guidelines.
For more information visit Smart Interchange at: www.RegalPTS.com or contact Application Engineering 800-626-2093.

Browning SPB1000 Part Description	Sealmaster USRB Part Description
SFC2112-C	USFC5000A-112-C
SFC2115-C	USFC5000A-115-C
SFC2200-C	USFC5000A-200-C
SFC2203-C	USFC5000A-203-C
SFC2207-C	USFC5000A-207-C
SFC2208-C	USFC5000A-208-C
SFC2211-C	USFC5000A-211-C
SFC2212-C	USFC5000A-212-C
SFC2215-C	USFC5000A-215-C
SFC2300-C	USFC5000A-300-C
SFC2307-C	USFC5000A-307-C
SFC2308-C	USFC5000A-308-C
SFC2315-C	USFC5000A-315-C
SFC2400-C	USFC5000A-400-C
SFC3115-C	USFCE5000A-115-C
SFC3200-C	USFCE5000A-200-C
SFC3203-C	USFCE5000A-203-C
SFC3207-C	USFCE5000A-207-C
SFC3208-C	USFCE5000A-208-C
SFC3211-C	USFCE5000A-211-C
SFC3212-C	USFCE5000A-212-C
SFC3215-C	USFCE5000A-215-C
SFC3307-C	USFCE5000A-307-C
SFC3308-C	USFCE5000A-308-C
SFC3315-C	USFCE5000A-315-C
SFC3400-C	USFCE5000A-400-C
SPB1000ECX 1 1/2	USRB5000E-108-C
SPB1000ECX 1 1/8	USRB5000E-102-C
SPB1000ECX 1 11/16	USRB5000E-111-C
SPB1000ECX 1 15/16	USRB5000E-115-C
SPB1000ECX 1 3/16	USRB5000E-103-C
SPB1000ECX 1 3/4	USRB5000E-112-C
SPB1000ECX 1 7/16	USRB5000E-107-C
SPB1000ECX 2 1/2	USRB5000E-208-C
SPB1000ECX 2 11/16	USRB5000E-211-C
SPB1000ECX 2 15/16	USRB5000E-215-C
SPB1000ECX 2 3/16	USRB5000E-203-C
SPB1000ECX 2 3/4	USRB5000E-212-C
SPB1000ECX 2 7/16	USRB5000E-207-C
SPB1000ECX 3 1/2	USRB5000E-308-C
SPB1000ECX 3 1/2	USRBF5000E-308
SPB1000ECX 3 11/16	USRB5000E-311-C
SPB1000ECX 3 15/16	USRB5000E-315-C
SPB1000ECX 3 3/16	USRB5000E-303-C
SPB1000ECX 3 7/16	USRB5000E-307-C
SPB1000ECX2	USRB5000E-200-C
SPB1000ECX3	USRB5000E-300-C

Browning SPB1000 Part Description	Sealmaster USRB Part Description
SPB1000ECX4	USRB5000E-400-C
SPB1000EX 1 1/2	USRB5000E-108
SPB1000EX 1 1/4	USRB5000E-104
SPB1000EX 1 1/8	USRB5000E-102
SPB1000EX 1 11/16	USRB5000E-111
SPB1000EX 1 15/16	USRB5000E-115
SPB1000EX 1 3/16	USRB5000E-103
SPB1000EX 1 3/4	USRB5000E-112
SPB1000EX 1 7/16	USRB5000E-107
SPB1000EX 2 1/2	USRB5000E-208
SPB1000EX 2 11/16	USRB5000E-211
SPB1000EX 2 15/16	USRB5000E-215
SPB1000EX 2 3/16	USRB5000E-203
SPB1000EX 2 3/4	USRB5000E-212
SPB1000EX 2 7/16	USRB5000E-207
SPB1000EX 3 1/2	USRB5000E-308
SPB1000EX 3 11/16	USRB5000E-311
SPB1000EX 3 15/16	USRB5000E-315
SPB1000EX 3 3/16	USRB5000E-303
SPB1000EX 3 7/16	USRB5000E-307
SPB1000EX2	USRB5000E-200
SPB1000EX3	USRB5000E-300
SPB1000EX4	USRB5000E-400
SPB1000FECX 2 1/2	USRBF5000E-208-C
SPB1000FECX 2 11/16	USRBF5000E-211-C
SPB1000FECX 2 15/16	USRBF5000E-215-C
SPB1000FECX 2 3/4	USRBF5000E-212-C
SPB1000FECX 2 7/16	USRBF5000E-207-C
SPB1000FECX 3 1/2	USRBF5000E-308-C
SPB1000FECX 3 11/16	USRBF5000E-311-C
SPB1000FECX 3 15/16	USRBF5000E-315-C
SPB1000FECX 3 3/16	USRBF5000E-303-C
SPB1000FECX 3 7/16	USRBF5000E-307-C
SPB1000FECX 4 1/2	USRB5000E-408-C
SPB1000FECX 4 15/16	USRB5000E-415-C
SPB1000FECX 4 7/16	USRB5000E-407-C
SPB1000FECX3	USRBF5000E-300-C
SPB1000FECX4	USRBF5000E-400-C
SPB1000FEX 2 1/2	USRBF5000E-208
SPB1000FEX 2 11/16	USRBF5000E-211
SPB1000FEX 2 15/16	USRBF5000E-215
SPB1000FEX 2 3/4	USRBF5000E-212
SPB1000FEX 2 7/16	USRBF5000E-207
SPB1000FEX 3 11/16	USRBF5000E-311
SPB1000FEX 3 15/16	USRBF5000-315
SPB1000FEX 3 3/16	USRBF5000E-303
SPB1000FEX 3 7/16	USRBF5000E-307

Browning SPB1000 Part Description	Sealmaster USRB Part Description
SPB1000FEX3	USRBF5000E-300
SPB1000FEX4	USRBF5000E-400
SPB1000FNECX 2 1/2	USRBF5000-208-C
SPB1000FNECX 2 3/4	USRBF5000-212-C
SPB1000FNECX 2 7/16	USRBF5000-207-C
SPB1000FNECX 3 1/2	USRBF5000-308-C
SPB1000FNECX 3 3/16	USRBF5000-303-C
SPB1000FNECX 3 7/16	USRBF5000-307-C
SPB1000FNECX 4 1/2	USRB5000-408-C
SPB1000FNECX 4 15/16	USRB5000-415-C
SPB1000FNECX 4 7/16	USRB5000-407-C
SPB1000FNECX2 11/16	USRBF5000-211-C
SPB1000FNECX2 15/16	USRBF5000-215-C
SPB1000FNECX3	USRBF5000-300-C
SPB1000FNECX3 11/16	USRBF5000-311-C
SPB1000FNECX3 15/16	USRBF5000-315-C
SPB1000FNECX4	USRBF5000-400-C
SPB1000FNEX 2 1/2	USRBF5000-208
SPB1000FNEX 2 11/16	USRBF5000-211
SPB1000FNEX 2 15/16	USRBF5000-215
SPB1000FNEX 2 3/4	USRBF5000-212
SPB1000FNEX 2 7/16	USRBF5000-207
SPB1000FNEX 3 1/2	USRBF5000-308
SPB1000FNEX 3 11/16	USRBF5000-311
SPB1000FNEX 3 3/16	USRBF5000-303
SPB1000FNEX 3 7/16	USRBF5000-307
SPB1000FNEX3	USRBF5000-300
SPB1000FNEX4	USRBF5000-400
SPB1000NECX 1 1/2	USRB5000-108-C
SPB1000NECX 1 1/4	USRB5000-104-C
SPB1000NECX 1 11/16	USRB5000-111-C
SPB1000NECX 1 15/16	USRB5000-115-C
SPB1000NECX 1 3/16	USRB5000-103-C
SPB1000NECX 1 3/4	USRB5000-112-C
SPB1000NECX 1 7/16	USRB5000-107-C
SPB1000NECX 2 1/2	USRB5000-208-C
SPB1000NECX 2 11/16	USRB5000-211-C
SPB1000NECX 2 15/16	USRB5000-215-C
SPB1000NECX 2 3/16	USRB5000-203-C
SPB1000NECX 2 3/4	USRB5000-212-C
SPB1000NECX 2 7/16	USRB5000-207-C
SPB1000NECX 3 1/2	USRB5000-308-C
SPB1000NECX 3 11/16	USRB5000-311-C
SPB1000NECX 3 15/16	USRB5000-315-C
SPB1000NECX 3 3/16	USRB5000-303-C
SPB1000NECX 3 7/16	USRB5000-307-C
SPB1000NECX2	USRB5000-200-C

The substitute products listed should be reviewed prior to installation by reviewing the product data sheet, installation instructions, and relubrication guidelines.
For more information visit Smart Interchange at: www.RegalPTS.com or contact Application Engineering 800-626-2093.

Browning SPB1000 to Sealmaster USRB Mounted Spherical Roller Bearings Substitution Guide Continued

Browning SPB1000 Part Description	Sealmaster USRB Part Description
SPB1000NECX3	USRB5000-300-C
SPB1000NECX4	USRB5000-400-C
SPB1000NEX 1 1/2	USRB5000-108
SPB1000NEX 1 1/4	USRB5000-104
SPB1000NEX 1 11/16	USRB5000-111
SPB1000NEX 1 15/16	USRB5000-115
SPB1000NEX 1 3/16	USRB5000-103
SPB1000NEX 1 3/4	USRB5000-112
SPB1000NEX 1 7/16	USRB5000-107
SPB1000NEX 2 1/2	USRB5000-208
SPB1000NEX 2 11/16	USRB5000-211
SPB1000NEX 2 15/16	USRB5000-215
SPB1000NEX 2 3/16	USRB5000-203
SPB1000NEX 2 3/4	USRB5000-212
SPB1000NEX 2 7/16	USRB5000-207
SPB1000NEX 3 1/2	USRB5000-308
SPB1000NEX 3 11/16	USRB5000-311
SPB1000NEX 3 15/16	USRB5000-315
SPB1000NEX 3 3/16	USRB5000-303
SPB1000NEX 3 7/16	USRB5000-307
SPB1000NEX2	USRB5000-200
SPB1000NEX3	USRB5000-300
SPB1000NEX4	USRB5000-400
SPB1100ECX 1 15/16	USRBE5000E-115-C
SPB1100ECX 2 1/2	USRBE5000E-208-C
SPB1100ECX 2 11/16	USRBE5000E-211-C
SPB1100ECX 2 15/16	USRBE5000E-215-C
SPB1100ECX 2 3/16	USRBE5000E-203-C
SPB1100ECX 2 3/4	USRBE5000E-212-C
SPB1100ECX 2 7/16	USRBE5000E-207-C
SPB1100ECX 3 1/2	USRBE5000E-308-C
SPB1100ECX 3 11/16	USRBE5000E-311-C
SPB1100ECX 3 15/16	USRBE5000E-315-C
SPB1100ECX 3 3/16	USRBE5000E-303-C
SPB1100ECX 3 7/16	USRBE5000E-307-C
SPB1100ECX2	USRBE5000E-200-C
SPB1100ECX3	USRBE5000E-300-C
SPB1100ECX4	USRBE5000E-400-C
SPB1100EX 2 1/2	USRBE5000E-208
SPB1100EX 2 11/16	USRBE5000E-211
SPB1100EX 2 15/16	USRBE5000E-215
SPB1100EX 2 3/16	USRBE5000E-203
SPB1100EX 2 3/4	USRBE5000E-212
SPB1100EX 2 7/16	USRBE5000E-207

Browning SPB1000 Part Description	Sealmaster USRB Part Description
SPB1100EX 3 1/2	USRBE5000E-308
SPB1100EX 3 11/16	USRBE5000E-311
SPB1100EX 3 15/16	USRBE5000E-315
SPB1100EX 3 3/16	USRBE5000E-303
SPB1100EX 3 7/16	USRBE5000E-307
SPB1100EX2	USRBE5000E-200
SPB1100EX3	USRBE5000E-300
SPB1100EX4	USRBE5000E-400
SPB1100NECX 1 15/16	USRBE5000-115-C
SPB1100NECX 2 1/2	USRBE5000-208-C
SPB1100NECX 2 11/16	USRBE5000-211-C
SPB1100NECX 2 15/16	USRBE5000-215-C
SPB1100NECX 2 3/16	USRBE5000-203-C
SPB1100NECX 2 3/4	USRBE5000-212-C
SPB1100NECX 2 7/16	USRBE5000-207-C
SPB1100NECX 3 1/2	USRBE5000-308-C
SPB1100NECX 3 11/16	USRBE5000-311-C
SPB1100NECX 3 15/16	USRBE5000-315-C
SPB1100NECX 3 3/16	USRBE5000-303-C
SPB1100NECX 3 7/16	USRBE5000-307-C
SPB1100NECX2	USRBE5000-200-C
SPB1100NECX3	USRBE5000-300-C
SPB1100NECX4	USRBE5000-400-C
SPB1100NEX 1 15/16	USRBE5000-115
SPB1100NEX 2 1/2	USRBE5000-208
SPB1100NEX 2 11/16	USRBE5000-211
SPB1100NEX 2 15/16	USRBE5000-215
SPB1100NEX 2 3/16	USRBE5000-203
SPB1100NEX 2 3/4	USRBE5000-212
SPB1100NEX 2 7/16	USRBE5000-207
SPB1100NEX 3 1/2	USRBE5000-308
SPB1100NEX 3 11/16	USRBE5000-311
SPB1100NEX 3 15/16	USRBE5000-315
SPB1100NEX 3 3/16	USRBE5000-303
SPB1100NEX 3 7/16	USRBE5000-307
SPB1100NEX2	USRBE5000-200
SPB1100NEX3	USRBE5000-300
SPB1100NEX4	USRBE5000-400
SPBF22515X 2 7/16	USRBF5515A-207
SPBF22517X 2 15/16	USRBF5517A-215
SPBF22520X 3 7/16	USRBF5520A-307
SPBF22522X 3 15/16	USRB5522A-315
SPBF22526X 4 7/16	USRB5526A-407
SPBF22528X 4 15/16	USRB5528A-415

Browning SPB1000 Part Description	Sealmaster USRB Part Description
SPBF22532X 5 7/16	USRB5532A-507
SPBF22534X 5 15/16	USRB5534A-515
SPBF22536X 6 1/2	USRB5536A-608
SPBF22536X 6 7/16	USRB5536A-607
SPBF22538X 6 15/16	USRB5538A-615
SPBF22538X7	USRB5538A-700
SPBF22544x 7 1/2	USRB5544A-708
SPBF22544X 7 15/16	USRB5544A-715
SPBF22544x8	USRB5544A-800
SPBT22515X 2 7/16	USRB5515A-207
SPBT22517X 2 15/16	USRB5517A-215
SPBT22520X 3 7/16	USRB5520A-307
STU1000NECX 1 15/16	USTU5000-115-C
STU1000NECX 2 1/2	USTU5000-208-C
STU1000NECX 2 11/16	USTU5000-211-C
STU1000NECX 2 15/16	USTU5000-215-C
STU1000NECX 2 3/16	USTU5000-203-C
STU1000NECX 2 3/4	USTU5000-212-C
STU1000NECX 2 7/16	USTU5000-207-C
STU1000NECX 3 1/2	USTU5000-308-C
STU1000NECX 3 11/16	USTU5000-311-C
STU1000NECX 3 15/16	USTU5000-315-C
STU1000NECX 3 3/16	USTU5000-303-C
STU1000NECX 3 7/16	USTU5000-307-C
STU1000NECX2	USTU5000-200-C
STU1000NECX3	USTU5000-300-C
STU1000NECX4	USTU5000-400-C
STU1000NEX 1 15/16	USTU5000-115
STU1000NEX 2 1/2	USTU5000-208
STU1000NEX 2 11/16	USTU5000-211
STU1000NEX 2 15/16	USTU5000-215
STU1000NEX 2 3/16	USTU5000-203
STU1000NEX 2 3/4	USTU5000-212
STU1000NEX 2 7/16	USTU5000-207
STU1000NEX 3 1/2	USTU5000-308
STU1000NEX 3 11/16	USTU5000-311
STU1000NEX 3 15/16	USTU5000-315
STU1000NEX 3 3/16	USTU5000-303
STU1000NEX 3 7/16	USTU5000-307
STU1000NEX2	USTU5000-200
STU1000NEX3	USTU5000-300
STU1000NEX4	USTU5000-400

The substitute products listed should be reviewed prior to installation by reviewing the product data sheet, installation instructions, and relubrication guidelines.
For more information visit Smart Interchange at: www.RegalPTS.com or contact Application Engineering 800-626-2093.

Sealmaster Sleevloc™ to Sealmaster USRB Mounted Spherical Roller Bearings Substitution Guide

	Primary Substitute	Alternate Substitute
Sealmaster Sleevloc™ Part Description	Sealmaster USRB Part Description	Sealmaster USRB Part Description
ESBF2107-C	USBF5000AE-107-C	USBF5000AE-107
ESBF2115-C	USBF5000AE-115-C	USBF5000AE-115
ESBF2207-C	USBFF5000AE-207-C	USBFF5000AE-207
ESFB2107-C	USFB5000AE-107-C	USFB5000AE-107
ESFB2108-C	USFB5000AE-108-C	USFB5000AE-108
ESFB2111-C	USFB5000AE-111-C	USFB5000AE-111
ESFB2112-C	USFB5000AE-112-C	USFB5000AE-112
ESFB2115-C	USFB5000AE-115-C	USFB5000AE-115
ESFB2200-C	USFB5000AE-200-C	USFB5000AE-200
ESFB2203-C	USFB5000AE-203-C	USFB5000AE-203
ESFB2207-C	USFB5000AE-207-C	USFB5000AE-207
ESFB2208-C	USFB5000AE-208-C	USFB5000AE-208
ESFB2211-C	USFB5000AE-211-C	USFB5000AE-211
ESFB2212-C	USFB5000AE-212-C	USFB5000AE-212
ESFB2215-C	USFB5000AE-215-C	USFB5000AE-215
ESFB2300-C	USFB5000AE-300-C	USFB5000AE-300
ESFB2307-C	USFB5000AE-307-C	USFB5000AE-307
ESFB2308-C	USFB5000AE-308-C	USFB5000AE-308
ESFB2315-C	USFB5000AE-315-C	USFB5000AE-315
ESFB2400-C	USFB5000AE-400-C	USFB5000AE-400
ESFB3115-C	USFBE5000AE-115-C	USFBE5000AE-115
ESFB3200-C	USFBE5000AE-200-C	USFBE5000AE-200
ESFB3203-C	USFBE5000AE-203-C	USFBE5000AE-203
ESFB3207-C	USFBE5000AE-207-C	USFBE5000AE-207
ESFB3208-C	USFBE5000AE-208-C	USFBE5000AE-208
ESFB3211-C	USFBE5000AE-211-C	USFBE5000AE-211
ESFB3212-C	USFBE5000AE-212-C	USFBE5000AE-212
ESFB3215-C	USFBE5000AE-215-C	USFBE5000AE-215
ESFB3300-C	USFBE5000AE-300-C	USFBE5000AE-300
ESFB3307-C	USFBE5000AE-307-C	USFBE5000AE-307
ESFB3308-C	USFBE5000AE-308-C	USFBE5000AE-308
ESFB3315-C	USFBE5000AE-315-C	USFBE5000AE-315
ESFB3400-C	USFBE5000AE-400-C	USFBE5000AE-400
ESFC2107-C	USFC5000AE-107-C	USFC5000AE-107
ESFC2108-C	USFC5000AE-108-C	USFC5000AE-108
ESFC2111-C	USFC5000AE-111-C	USFC5000AE-111
ESFC2112-C	USFC5000AE-112-C	USFC5000AE-112
ESFC2115-C	USFC5000AE-115-C	USFC5000AE-115
ESFC2200-C	USFC5000AE-200-C	USFC5000AE-200
ESFC2203-C	USFC5000AE-203-C	USFC5000AE-203
ESFC2207-C	USFC5000AE-207-C	USFC5000AE-207
ESFC2208-C	USFC5000AE-208-C	USFC5000AE-208
ESFC2211-C	USFC5000AE-211-C	USFC5000AE-211
ESFC2212-C	USFC5000AE-212-C	USFC5000AE-212
ESFC2215-C	USFC5000AE-215-C	USFC5000AE-215
ESFC2300-C	USFC5000AE-300-C	USFC5000AE-300
ESFC2307-C	USFC5000AE-307-C	USFC5000AE-307

	Primary Substitute	Alternate Substitute
Sealmaster Sleevloc™ Part Description	Sealmaster USRB Part Description	Sealmaster USRB Part Description
ESFC2308-C	USFC5000AE-308-C	USFC5000AE-308
ESFC2315-C	USFC5000AE-315-C	USFC5000AE-315
ESFC2400-C	USFC5000AE-400-C	USFC5000AE-400
ESFC3200-C	USFCE5000AE-200-C	USFCE5000AE-200
ESFC3203-C	USFCE5000AE-203-C	USFCE5000AE-203
ESFC3207-C	USFCE5000AE-207-C	USFCE5000AE-207
ESFC3208-C	USFCE5000AE-208-C	USFCE5000AE-208
ESFC3211-C	USFCE5000AE-211-C	USFCE5000AE-211
ESFC3215-C	USFCE5000AE-215-C	USFCE5000AE-215
ESFC3300-C	USFCE5000AE-300-C	USFCE5000AE-300
ESFC3307-C	USFCE5000AE-307-C	USFCE5000AE-307
ESFC3308-C	USFCE5000AE-308-C	USFCE5000AE-308
ESPB2107-C2	USRB5000AE-107-C	USRB5000AE-107
ESPB2108-C2	USRB5000AE-108-C	USRB5000AE-108
ESPB2111-C2	USRB5000AE-111-C	USRB5000AE-111
ESPB2112-C2	USRB5000AE-112-C	USRB5000AE-112
ESPB2115-C2	USRB5000AE-115-C	USRB5000AE-115
ESPB2200-C2	USRB5000AE-200-C	USRB5000AE-200
ESPB2203-C2	USRB5000AE-203-C	USRB5000AE-203
ESPB2207-C2	USRB5000AE-207-C	USRB5000AE-207
ESPB2207-C4	USRBF5000AE-207-C	USRBF5000AE-207
ESPB2208-C2	USRB5000AE-208-C	USRB5000AE-208
ESPB2208-C4	USRBF5000AE-208-C	USRBF5000AE-208
ESPB2211-C2	USRB5000AE-211-C	USRB5000AE-211
ESPB2211-C4	USRBF5000AE-211-C	USRBF5000AE-211
ESPB2212-C2	USRB5000AE-212-C	USRB5000AE-212
ESPB2212-C4	USRBF5000AE-212-C	USRBF5000AE-212
ESPB2215-C2	USRB5000AE-215-C	USRB5000AE-215
ESPB2215-C4	USRBF5000AE-215-C	USRBF5000AE-215
ESPB2300-C2	USRB5000AE-300-C	USRB5000AE-300
ESPB2300-C4	USRBF5000AE-300-C	USRBF5000AE-300
ESPB2307-C2	USRB5000AE-307-C	USRB5000AE-307
ESPB2307-C4	USRBF5000AE-307-C	USRBF5000AE-307
ESPB2308-C2	USRB5000AE-308-C	USRB5000AE-308
ESPB2308-C4	USRBF5000AE-308-C	USRBF5000AE-308
ESPB2315-C2	USRB5000AE-315-C	USRB5000AE-315
ESPB2315-C4	USRBF5000AE-315-C	USRBF5000AE-315
ESPB2400-C2	USRB5000AE-400-C	USRB5000AE-400
ESPB2400-C4	USRBF5000AE-400-C	USRBF5000AE-400
ESPB3115-C2	USRBE5000AE-115-C	USRBE5000AE-115
ESPB3200-C2	USRBE5000AE-200-C	USRBE5000AE-200
ESPB3203-C2	USRBE5000AE-203-C	USRBE5000AE-203
ESPB3207-C2	USRBE5000AE-207-C	USRBE5000AE-207
ESPB3208-C2	USRBE5000AE-208-C	USRBE5000AE-208
ESPB3211-C2	USRBE5000AE-211-C	USRBE5000AE-211
ESPB3212-C2	USRBE5000AE-212-C	USRBE5000AE-212
ESPB3215-C2	USRBE5000AE-215-C	USRBE5000AE-215

The substitute products listed should be reviewed prior to installation by reviewing the product data sheet, installation instructions, and relubrication guidelines.
For more information visit Smart Interchange at: www.RegalPTS.com or contact Application Engineering 800-626-2093.

Sealmaster Sleevloc™ to Sealmaster USRB Mounted Spherical Roller Bearings Substitution Guide

	Primary Substitute	Alternate Substitute
Sealmaster Sleevloc™ Part Description	Sealmaster USRB Part Description	Sealmaster USRB Part Description
ESPB3300-C2	USRBE5000AE-300-C	USRBE5000AE-300
ESPB3307-C2	USRBE5000AE-307-C	USRBE5000AE-307
ESPB3308-C2	USRBE5000AE-308-C	USRBE5000AE-308
ESPB3315-C2	USRBE5000AE-315-C	USRBE5000AE-315
ESPB3400-C2	USRBE5000AE-400-C	USRBE5000AE-400
SBF2107-C	USBF5000A-107-C	USBF5000A-107
SBF2115-C	USBF5000A-115-C	USBF5000A-115
SBF2207-C	USBFF5000A-207-C	USBFF5000A-207
SFB2107-C	USFB5000A-107-C	USFB5000A-107
SFB2108-C	USFB5000A-108-C	USFB5000A-108
SFB2111-C	USFB5000A-111-C	USFB5000A-111
SFB2112-C	USFB5000A-112-C	USFB5000A-112
SFB2115-C	USFB5000A-115-C	USFB5000A-115
SFB2200-C	USFB5000A-200-C	USFB5000A-200
SFB2203-C	USFB5000A-203-C	USFB5000A-203
SFB2207-C	USFB5000A-207-C	USFB5000A-207
SFB2208-C	USFB5000A-208-C	USFB5000A-208
SFB2211-C	USFB5000A-211-C	USFB5000A-211
SFB2212-C	USFB5000A-212-C	USFB5000A-212
SFB2215-C	USFB5000A-215-C	USFB5000A-215
SFB2300-C	USFB5000A-300-C	USFB5000A-300
SFB2307-C	USFB5000A-307-C	USFB5000A-307
SFB2308-C	USFB5000A-308-C	USFB5000A-308
SFB2315-C	USFB5000A-315-C	USFB5000A-315
SFB2400-C	USFB5000A-400-C	USFB5000A-400
SFB3115-C	USFBE5000A-115-C	USFBE5000A-115
SFB3200-C	USFBE5000A-200-C	USFBE5000A-200
SFB3203-C	USFBE5000A-203-C	USFBE5000A-203
SFB3207-C	USFBE5000A-207-C	USFBE5000A-207
SFB3208-C	USFBE5000A-208-C	USFBE5000A-208
SFB3211-C	USFBE5000A-211-C	USFBE5000A-211
SFB3212-C	USFBE5000A-212-C	USFBE5000A-212
SFB3215-C	USFBE5000A-215-C	USFBE5000A-215
SFB3300-C	USFBE5000A-300-C	USFBE5000A-300
SFB3307-C	USFBE5000A-307-C	USFBE5000A-307
SFB3308-C	USFBE5000A-308-C	USFBE5000A-308
SFB3315-C	USFBE5000A-315-C	USFBE5000A-315
SFB3400-C	USFBE5000A-400-C	USFBE5000A-400
SPB2107-C2	USRB5000A-107-C	USRB5000A-107
SPB2108-C2	USRB5000A-108-C	USRB5000A-108
SPB2111-C2	USRB5000A-111-C	USRB5000A-111
SPB2112-C2	USRB5000A-112-C	USRB5000A-112
SPB2115-C2	USRB5000A-115-C	USRB5000A-115
SPB2200-C2	USRB5000A-200-C	USRB5000A-200
SPB2203-C2	USRB5000A-203-C	USRB5000A-203
SPB2207-C2	USRB5000A-207-C	USRB5000A-207
SPB2207-C4	USRBF5000A-207-C	USRBF5000A-207

	Primary Substitute	Alternate Substitute
Sealmaster Sleevloc™ Part Description	Sealmaster USRB Part Description	Sealmaster USRB Part Description
SPB2208-C2	USRB5000A-208-C	USRB5000A-208
SPB2208-C4	USRBF5000A-208-C	USRBF5000A-208
SPB2211-C2	USRB5000A-211-C	USRB5000A-211
SPB2211-C4	USRBF5000A-211-C	USRBF5000A-211
SPB2212-C2	USRB5000A-212-C	USRB5000A-212
SPB2212-C4	USRBF5000A-212-C	USRBF5000A-212
SPB2215-C2	USRB5000A-215-C	USRB5000A-215
SPB2215-C4	USRBF5000A-215-C	USRBF5000A-215
SPB2300-C2	USRB5000A-300-C	USRB5000A-300
SPB2300-C4	USRBF5000A-300-C	USRBF5000A-300
SPB2307-C2	USRB5000A-307-C	USRB5000A-307
SPB2307-C4	USRBF5000A-307-C	USRBF5000A-307
SPB2308-C2	USRB5000A-308-C	USRB5000A-308
SPB2308-C4	USRBF5000A-308-C	USRBF5000A-308
SPB2315-C2	USRB5000A-315-C	USRB5000A-315
SPB2315-C4	USRBF5000A-315-C	USRBF5000A-315
SPB2400-C2	USRB5000A-400-C	USRB5000A-400
SPB2400-C4	USRBF5000A-400-C	USRBF5000A-400
SPB3115-C2	USRBE5000A-115-C	USRBE5000A-115
SPB3200-C2	USRBE5000A-200-C	USRBE5000A-200
SPB3203-C2	USRBE5000A-203-C	USRBE5000A-203
SPB3207-C2	USRBE5000A-207-C	USRBE5000A-207
SPB3208-C2	USRBE5000A-208-C	USRBE5000A-208
SPB3211-C2	USRBE5000A-211-C	USRBE5000A-211
SPB3212-C2	USRBE5000A-212-C	USRBE5000A-212
SPB3215-C2	USRBE5000A-215-C	USRBE5000A-215
SPB3300-C2	USRBE5000A-300-C	USRBE5000A-300
SPB3307-C2	USRBE5000A-307-C	USRBE5000A-307
SPB3308-C2	USRBE5000A-308-C	USRBE5000A-308
SPB3315-C2	USRBE5000A-315-C	USRBE5000A-315
SPB3400-C2	USRBE5000A-400-C	USRBE5000A-400
STU2115-C	USTU5000A-115-C	USTU5000A-115
STU2200-C	USTU5000A-200-C	USTU5000A-200
STU2203-C	USTU5000A-203-C	USTU5000A-203
STU2207-C	USTU5000A-207-C	USTU5000A-207
STU2208-C	USTU5000A-208-C	USTU5000A-208
STU2211-C	USTU5000A-211-C	USTU5000A-211
STU2212-C	USTU5000A-212-C	USTU5000A-212
STU2215-C	USTU5000A-215-C	USTU5000A-215
STU2300-C	USTU5000A-300-C	USTU5000A-300
STU2307-C	USTU5000A-307-C	USTU5000A-307
STU2308-C	USTU5000A-308-C	USTU5000A-308
STU2315-C	USTU5000A-315-C	USTU5000A-315
STU2400-C	USTU5000A-400-C	USTU5000A-400

The substitute products listed should be reviewed prior to installation by reviewing the product data sheet, installation instructions, and relubrication guidelines.
For more information visit Smart Interchange at: www.RegalPTS.com or contact Application Engineering 800-626-2093.

Keyword Index

Part Number Index

Part Number Index

Part Number Index

All sales are made on our STANDARD TERMS AND CONDITIONS OF SALE in effect at the time a customer's order is accepted. The current Terms and Conditions are set forth below:

STANDARD TERMS AND CONDITIONS OF SALE (February 2015)

These Terms and Conditions, the attendant quotation or acknowledgment and all documents incorporated by specific reference therein, will be the complete and exclusive statement of the terms of the agreement governing the sale of goods ("Goods") by Regal Beloit America Inc. and its divisions and subsidiaries ("Seller") to Customer ("Buyer"). Buyer's acceptance of the Goods will manifest Buyer's assent to these Terms and Conditions. If these Terms and Conditions differ in any way from the terms and conditions of Buyer's order, or other documentation, this document will be construed as a counteroffer and will not be deemed an acceptance of Buyer's terms and conditions which conflict herewith.

1. PRICES: Unless otherwise specified in writing by Seller, Seller's price for the goods shall remain in effect for thirty (30) days after the date of Seller's quotation or acknowledgment of Buyer's order for the Goods, whichever occurs first, provided an unconditional, complete authorization for the immediate shipment of the Goods is received and accepted by Seller within such time period. If such authorization is not received by Seller within such thirty (30) day period, Seller shall have the right to change the price for the Good to Seller's price for the Goods at the time of shipment.
2. TAXES: Any tax or governmental charge or increase in same hereafter becoming effective increasing the cost to Seller of producing, selling or delivering the Goods/provision of Services or of procuring material used therein, and any tax now in effect or increase in same payable by the Seller because of the manufacture, sale or delivery of the Goods/provision of Services, may at Seller's option, be added to the price.
3. TERMS OF PAYMENT: Subject to the approval of Seller's Credit Department, terms are net thirty (30) days from date of Seller's invoice in U.S. currency. If any payment owed to Seller is not paid when due, it shall bear interest, at a rate to be determined by Seller, which shall not exceed the maximum rate permitted by law, from the date on which it is due until it is paid. Seller shall have the right, among other remedies, either to terminate the Agreement or to suspend further performance under this and/or other agreements with Buyer in the event Buyer fails to make any payment when due. Buyer shall be liable for all expenses, including attorneys' fees, relating to the collection of past due amounts.
4. SHIPMENT AND DELIVERY: Shipments are made F.O.B. Seller's shipping point. Any claims for shortages or damages suffered in transit shall be submitted by the Buyer directly to the carrier. While Seller will use all reasonable commercial efforts to maintain the delivery date for the Goods or the date of provision of Services acknowledged or quoted by Seller, all such dates are approximate. Seller reserves the right to make partial shipments and to segregate "specials" and made-to-order Goods from normal stock Goods. Seller shall not be bound to tender delivery of any Goods for which Buyer has not provided shipping instructions.
5. QUANTITY: Buyer agrees to accept overruns of up to ten percent (10%) of the order on "made-to-order" Goods, including parts. Any such additional items shall be priced at the price per item charged for the specific quantity ordered.
6. LIMITED WARRANTY: Subject to the limitations of Section 7, Seller warrants that the Goods will be free from defects in material and workmanship under normal use, service and maintenance and Services will be performed by trained personnel using proper equipment and instrumentation for the particular Service provided. Any licensed firmware embodied in the Goods will execute the programming instructions provided by Seller. The foregoing warranties will apply until the expiration of the applicable warranty period. Except as specified below, Goods are warranted for twelve (12) months (unless otherwise specified by Seller in writing) from the date of shipment of the Goods by Seller. Consumables and Services (except as specified below) are warranted for a period of 90 days from the date of shipment or completion of the Services. Products purchased by Seller from a third party for resale to Buyer ("Resale Products") shall carry only the warranty extended by the original manufacturer. Buyer agrees that Seller has no liability for Resale Products beyond making a reasonable commercial effort to arrange for procurement and shipping of the Resale Products. **THIS IS THE SOLE AND EXCLUSIVE WARRANTY GIVEN BY SELLER WITH RESPECT TO THE GOODS/SERVICES AND IS IN LIEU OF AND EXCLUDES ALL OTHER WARRANTIES, EXPRESS OR IMPLIED, ARISING BY OPERATION OF LAW OR OTHERWISE, INCLUDING WITHOUT LIMITATION, MERCHANTABILITY OR FITNESS FOR A PARTICULAR PURPOSE WHETHER OR NOT THE PURPOSE OR USE HAS BEEN DISCLOSED TO SELLER IN SPECIFICATIONS, DRAWINGS OR OTHERWISE, AND WHETHER OR NOT SELLER'S PRODUCTS ARE SPECIFICALLY DESIGNED AND/OR MANUFACTURED BY SELLER FOR BUYER'S USE OR PURPOSE.**
This warranty does not extend to any losses or damages due to misuse, accident, abuse, neglect, normal wear and tear, unauthorized modification or alteration, use beyond rated capacity, or improper installation, maintenance or application. To the extent that Buyer or its agents has supplied specifications, information, representation of operating conditions or other data to Seller in the selection or design of the Goods or provision of Services and the preparation of Seller's quotation, and in the event that actual operating conditions or other conditions differ from those represented by Buyer, any warranties or other provisions contained herein which are affected by such conditions shall be null and void. If within thirty (30) days after Buyer's discovery of any warranty defects within the warranty period, Buyer notifies Seller thereof in writing, Seller shall, at its option, repair, correct, or replace F.O.B. point of manufacture, or refund the purchase price for, that portion of the goods found by Seller to be defective. Failure by Buyer to give such written notice within the applicable time period shall be deemed an absolute and unconditional waiver of Buyer's claim for such defects. Goods repaired or replaced during the warranty period shall be covered by the foregoing warranty for the remainder of the original warranty period or ninety (90) days, whichever is longer. Buyer assumes all other responsibility for any loss, damage, or injury to persons or property arising out of, connected with, or resulting from the use of Goods, either alone or in combination with other products/components.
SECTIONS 6 AND 7 APPLY TO ANY ENTITY OR PERSON WHO MAY BUY, ACQUIRE OR USE SELLER'S GOODS, INCLUDING ANY ENTITY OR PERSON WHO BUYS THE GOODS FROM SELLER'S DISTRIBUTOR AND SUCH ENTITY OR PERSON SHALL BE BOUND BY THE LIMITATIONS THEREIN.
7. LIMITATION OF REMEDY AND LIABILITY: **THE SOLE AND EXCLUSIVE REMEDY FOR BREACH OF ANY WARRANTY HEREUNDER (OTHER THAN THE WARRANTY PROVIDED UNDER SECTION 13) SHALL BE LIMITED TO REPAIR, CORRECTION, REPLACEMENT, OR REFUND OF THE PURCHASE PRICE UNDER SECTION 6. SELLER SHALL NOT BE LIABLE FOR DAMAGES CAUSED BY DELAY IN PERFORMANCE AND IN NO EVENT, REGARDLESS OF THE FORM OF THE CLAIM OR CAUSE OF ACTION (WHETHER BASED IN CONTRACT, INFRINGEMENT, NEGLIGENCE, STRICT LIABILITY, OTHER TORT OR OTHERWISE), SHALL SELLER'S LIABILITY TO BUYER AND/OR ITS CUSTOMERS EXCEED THE PRICE TO BUYER OF THE SPECIFIC GOODS OR SERVICES PROVIDED BY SELLER GIVING RISE TO THE CLAIM OR CAUSE OF ACTION. BUYER AGREES THAT IN NO EVENT SHALL SELLER'S LIABILITY TO BUYER AND/OR ITS CUSTOMERS EXTEND TO INCLUDE INCIDENTAL, CONSEQUENTIAL OR PUNITIVE DAMAGES. THE TERM "CONSEQUENTIAL DAMAGES" SHALL INCLUDE, BUT NOT BE LIMITED TO, LOSS OF ANTICIPATED PROFITS, LOSS OF USE, LOSS OF REVENUE, COST OF CAPITAL AND DAMAGE OR LOSS OF OTHER PROPERTY OR EQUIPMENT AND COSTS INCURRED INCLUDING WITHOUT LIMITATION FOR CAPITAL, FUEL AND POWER, AND CLAIMS OF BUYER'S CUSTOMERS. GOODS AND/OR SERVICES SOLD HEREUNDER ARE NOT FOR USE IN ANY NUCLEAR AND RELATED APPLICATIONS.**
Buyer accepts goods and/or services with the foregoing understanding, agrees to communicate the same in writing to any subsequent purchaser or users and to defend, indemnify and hold harmless Seller from any claims, losses, suits, judgments and damages, including incidental and consequential damages, arising from such use, whether the cause of action be based in tort, contract or otherwise, including allegations that the Seller's liability is based on negligence or strict liability.
8. BUYER RESPONSIBILITIES: Buyer shall provide Seller ready access to the site where services are to be performed and adequate workspace and facilities to perform same as provided in these terms and conditions. Buyer shall not require Seller or its employees, as a condition to site access or otherwise, to further agree or enter into any agreement, which waives, releases, indemnifies or otherwise limits or expands any rights or obligations whatsoever. Any such agreements shall be null and void. Buyer shall inform Seller, in writing, at the time of order placement, of any known hazardous substance or condition at the site, including, but not limited to, the presence of asbestos or asbestos containing materials, and shall provide Seller with any applicable Material Data Safety Sheets regarding same. Buyer shall appoint a representative familiar with the site and the nature of the services to be performed by Seller to be present at all times that Seller personnel are at the site. Seller shall not be liable for any expenses incurred by Buyer in removing, replacing or refurbishing any Buyer equipment or any part of Buyer's building structure that restricts Seller access. Buyer personnel shall cooperate with and provide all necessary assistance to Seller. Seller shall not be liable or responsible for any work performed by Buyer.
9. BUYER SUPPLIED DATA: To the extent that Seller has relied upon any data or information supplied by Buyer to Seller ("Data") in the selection or design of the Goods and/or provision of the Services and the preparation of Seller's quotation, and the Data is inadequate or inaccurate, any warranties or other provisions contained herein which are affected by such conditions shall be null and void.
10. TECHNICAL ADVICE: It is expressly understood that the Seller assumes no obligation or liability for any technical advice given without charge and furnished by the Seller with respect to the use of the Goods. All such technical advice, or results obtained, is given and accepted at Buyer's risk.
11. EXCUSE OF PERFORMANCE: Seller shall not be liable for delays in performance or for nonperformance due to acts of God, acts of Buyer, war, riot, fire, flood, other severe weather, sabotage, or epidemics; strikes or labor disturbances; governmental requests, restrictions, laws, regulations, orders or actions; unavailability of or delays in transportation; default of suppliers; or unforeseen circumstances or any events or causes beyond Seller's reasonable control. Deliveries of Goods or provision of Services may be suspended for an appropriate period of time as a result of the foregoing. If Seller determines that its ability to supply the total demand for the Goods, or to obtain material used directly or indirectly in the manufacture of the Goods, is hindered, limited or made impracticable due to causes addressed in this Section 8, Seller may allocate its available supply of the Goods or such material (without obligation to acquire other supplies of any such Goods or material) among itself and its purchasers on such basis as Seller determines to be equitable without liability for any failure of performance which may result there from. Deliveries suspended or not made by reason of this section may be canceled by Seller upon notice to Buyer without liability, but the balance of the agreement shall otherwise remain unaffected.
12. CANCELLATIONS AND DELAYS: The Buyer may cancel orders only upon written notice and upon payment to Seller of cancellation charges which include, among other things, all costs and expenses incurred and commitments made by the Seller and a reasonable profit thereon. Any request by Buyer to extend the delivery schedule must be agreed to in writing by the Seller. If agreement cannot be reached, Seller may deliver product or provide services to the last known ship to address and invoice the Buyer upon completion of the product or services or prior delivery date, whichever is later.
13. CHANGES: Buyer may request changes or additions to the Goods/Services consistent with Seller's specifications and criteria. In the event such changes or additions are accepted by Seller, Seller may revise the price and delivery schedule. Seller reserves the right to change designs and specifications for the Goods or Services without prior notice to Buyer, except with respect to Goods being made-to-order for Buyer. Seller may cancel any order or terminate any agreement without liability to Buyer if Buyer fails To meet the conditions specified herein.
14. TOOLING: Tool, die, and pattern charges, if any, are in addition to the price of the Goods/Services and are due and payable upon completion of the tooling. All such tools, dies and patterns shall be and remain the property of Seller. Charges for tools, dies, and patterns do not convey to Buyer, title, ownership interests in, or rights to possession or removal, nor prevent their use by Seller for other purchasers, except as otherwise expressly provided by Seller and Buyer in writing with reference to this provision.
15. SOFTWARE AND FIRMWARE: Notwithstanding any other provision herein to the contrary, Seller or applicable third party owner shall retain all rights of ownership and title in its respective firmware and software, including all copyrights relating to such firmware and software and all copies of such firmware and software. Except as otherwise provided herein, Buyer is hereby granted a nonexclusive, royalty free license to use firmware and software, and copies of firmware and software, incorporated into the Goods only in conjunction with such Goods and only at the Buyer's plant site where the Goods are first used. Buyer's use of certain firmware (as specified by Seller) and all other software shall be governed exclusively by Seller's and/or third party owner's applicable license terms.
16. ASSIGNMENT: Buyer shall not assign its rights or delegate its duties hereunder or any interest therein or any rights hereunder without the prior written consent of the Seller, and any such assignment, without such consent, shall be void.
17. PATENTS AND COPYRIGHTS: Subject to Section 7, Seller warrants that the Goods and/or Services sold, except as are made specifically for Buyer according to Buyer's specifications, do not infringe any valid U.S. patent or copyright in existence as of the date of delivery. This warranty is given upon the condition that Buyer promptly notify Seller of any claim or suit involving Buyer in which such infringement is alleged, and, that Buyer cooperate fully with Seller and permit Seller to control completely the defense or compromise of any such allegation of infringement. Seller's warranty as to use only applies to infringements arising solely out of the inherent operation (i) of such Goods, or (ii) of any combination of Goods in a system designed by Seller. In the event such Goods and/or Services, singularly or in combination, are held to infringe a U.S. patent or copyright in such suit, and the use of such Goods and/or Services is enjoined, or in the case of a compromise by Seller, Seller shall have the right, at its option and expense, to procure for Buyer the right to continue using such Goods or providing such Services, or replace them with non-infringing Goods or Services; or modify same to become non-infringing; or grant Buyer a credit for the depreciated value of such Goods and accept return of them or grant Buyer a credit for such provided Services.
18. EXPORT/IMPORT: Buyer agrees that all applicable import and export control laws, regulations, orders, and requirements, including without limitation those of the United States and the European Union, and the jurisdictions in which the Seller and the Buyer are established or from which Goods may be supplied, will apply to their receipt and use. In no event shall Buyer use, transfer, release, import, or export Goods in violation of such applicable laws, regulations, orders or requirements.
19. HIRING/EMPLOYEES: Buyer agrees that during the execution of Services by Seller and for a period of twelve (12) months after the performance of Services, it will not hire any employee(s) of Seller and will not entice or counsel any such employee(s) to leave Seller's employ. Buyer agrees that this covenant shall extend to its agents and affiliates. In the event that an employee of Seller is hired or leaves the employ of Seller in such circumstances, Buyer shall pay Seller, as compensation for the cost incurred by Seller in recruiting and training the employee, the sum equivalent to six (6) months pay for each employee hired from or leaving the employment of Seller.
20. EMPLOYEE SAFETY AND SUSPENSION OF SERVICES: Seller may suspend or terminate Services, at its sole discretion, without liability to Buyer if Buyer fails to meet its obligations hereunder or becomes bankrupt or insolvent or if Seller determines that continuing to provide Services represents a hazardous condition for its employees.
21. MISCELLANEOUS: These terms and conditions set forth the entire understanding and agreement between Seller and Buyer, and supersede all other communications, negotiations and prior oral or written statements regarding the subject matter of these terms and conditions. No change, modification, rescission, discharge, abandonment, or waiver of these terms and conditions of Sale shall be binding upon the Seller unless made in writing and signed on its behalf by an officer of the Seller. No conditions, usage or trade, course of dealing or performance, understanding or agreement purporting to modify, vary, explain, or supplement these Terms and Conditions shall be binding unless hereafter made in writing and signed by the party to be bound, and no modification shall be affected by the acceptance of purchase orders or shipping instruction forms containing terms at variance with or in addition to those set forth herein. Any such modifications or additional terms are specifically rejected by Seller. No waiver by Seller with respect to any breach or default or any right or remedy and no course of dealing, shall be deemed to constitute a continuing waiver of any other breach or default or of any other right or remedy, unless such waiver be expressed in writing and signed by the party to be bound. Seller is not responsible for typographical or clerical errors made in any quotation, orders or publications. All such errors are subject to correction. The validity, performance, and all other matters relating to the interpretation and effect of this contract shall be governed by the law of the state of New York. The United Nations Convention on the International Sale of Goods shall not apply to any transaction hereunder.

Browning®

McGILL®

ROLLWAY®

SEALMASTER®

Regal Power Transmission Solutions
7120 New Buffington Road
Florence, KY 41042
Customer Service: 800-626-2120
Fax: 800-262-3292
Technical Service: 800-626-2093

www.RegalPTS.com

APPLICATION CONSIDERATIONS

The proper selection and application of power transmission products and components, including the related area of product safety, is the responsibility of the customer. Operating and performance requirements and potential associated issues will vary appreciably depending upon the use and application of such products and components. The scope of the technical and application information included in this publication is necessarily limited. Unusual operating environments and conditions, lubrication requirements, loading supports, and other factors can materially affect the application and operating results of the products and components and the customer should carefully review its requirements. Any technical advice or review furnished by Regal Beloit America, Inc. and its affiliates with respect to the use of products and components is given in good faith and without charge, and Regal assumes no obligation or liability for the advice given, or results obtained, all such advice and review being given and accepted at customer's risk.

For a copy of our Standard Terms and Conditions of Sale, Disclaimers of Warranty, Limitation of Liability and Remedy, please contact Customer Service at 1-800-626-2120. These terms and conditions of sale, disclaimers and limitations of liability apply to any person who may buy, acquire or use a Regal Beloit America Inc. product referred to herein, including any person who buys from a licensed distributor of these branded products.

 MCC15005E • Form# 9391E • Printed in USA

REGAL™